UNCLASSIFIED

AD

217076

FOR
MICRO-CARD
CONTROL ONLY

Reproduced From
Best Available Copy

Armed Services Technical Information Agency

ARLINGTON HALL STATION; ARLINGTON 12 VIRGINIA

UNCLASSIFIED

"NOTICE: When Government or other drawings, specifications or other data are used for any purpose other than in connection with a definitely related Government procurement operation, the U.S. Government thereby incurs no responsibility, nor any obligation whatsoever; and the fact that the Government may have formulated, furnished, or in any way supplied the said drawings, specification or other data is not to be regarded by implication or otherwise as in any manner licensing the holder or any other person or corporation, or conveying any rights or permission to manufacture, use or sell any patented invention that may in any way be related thereto.

217 076

GEOPHYSICAL RESEARCH PAPERS

No. 59

PROJECT PRAIRIE GRASS, A FIELD PROGRAM IN DIFFUSION

VOLUME III

EDITED BY:
TORRE A. HANSEN

JUNE 1959

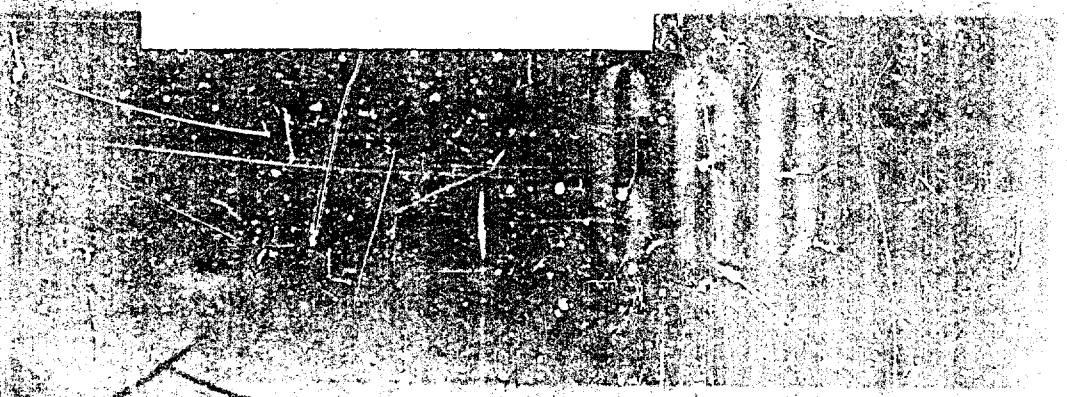

GEOPHYSICS RESEARCH DIRECTORATE
AIR FORCE CAMBRIDGE RESEARCH LABORATORY
AIR RESEARCH AND DEVELOPMENT COMMAND
UNITED STATES AIR FORCE
BEDFORD, MASSACHUSETTS

ERRATA

The following entries were omitted from TABLE 3. 1, Surface Weather Observations, p. 19, of VOLUME I, Geophysical Research Papers No. 59, "Project Prairie Grass, A Field Program in Diffusion," dated July 1958:

Gas Release No.	Time (CST)	Ceiling	Visibility (miles)	Temp. (°F)	Wind Direction	Dew Point (°F)	Wet Bulb (°F)	Relative Humidity (%)	Total Sky Cover
66	2115	UNL	15	69	S	47	57	45	0
67	0035	UNL	15	69	S	-	-	-	0
68	0235	UNL	15	70	S	-	-	-	0

AFCRC-TR-58-235(III)
ASTIA Document No. AD 217076

GEOPHYSICAL RESEARCH PAPERS
No. 59

PROJECT PRAIRIE GRASS,
A FIELD PROGRAM IN DIFFUSION,

Volume III

Edited by
DUANE A. HAUGEN

June 1959

Project 7657

Atmospheric Analysis Laboratory
GEOPHYSICS RESEARCH DIRECTORATE
AIR FORCE CAMBRIDGE RESEARCH CENTER
AIR RESEARCH AND DEVELOPMENT COMMAND
UNITED STATES AIR FORCE
Bedford, Mass.

ABSTRACT

Project Prairie Grass was a field program designed to provide experimental data on the diffusion of a tracer gas over a range of 800 meters. This, the third volume of the report on the project, contains descriptions of the fast-response instrumentation utilized for the measurement of wind fluctuations. The data reduction and analysis techniques are also presented along with tabulations of the results of the computations.

CONTENTS

VOLUME III

Chapter		Page
14	Sonic Anemometer-Thermometer	
	14.1 Principle of the Sonic Anemometer-Thermometer	1
	14.2 Circuit Details for the Sonic Anemometer-Thermometer	13
	14.3 Data Reduction Technique	29
15	Fast-Response Meteorological Instrumentation Used to Study Turbulent Structure During Project Prairie Grass	61
16	An Analog-Digital Automatic Data-Processing Machine	79
17	Reduction and Spectral Analyses of M.I.T. Bivane Data	125

ILLUSTRATIONS

Figure		Page
14.1	Block Diagrams Showing Principle of Sonic Anemometer-Thermometer	2
14.2	Timing Sequence of Sonic Anemometer-Thermometer	4
14.3	Theory of Wind Measurement	5
14.4	Array of Sonic Anemometer Heads	8
14.5	Sample Record of Sonic Anemometer Observations	8
14.6	Combination of 4-Channel Synchroscope and Camera	8
14.7	Combination of Synchroscope, Camera, and Wind and Temperature Chassis	8
14.8	Block Diagram of Sonic Anemometer-Thermometer (an extension of Fig. 14.1)	14
14.9	Power Supply, Schematic Circuit Diagram	15
14.10	Display of Sonic Anemometer Heads	16
14.11	Display of Sonic Anemometer Heads and Preamplifier	16
14.12	Sonic Anemometer Preamplifier	16
14.13	Receiver and Transmitter, Schematic Circuit Diagram	17
14.14	Transmitter Pulsing, Circuit Diagram	18
14.15	Temperature Unit, Schematic Circuit Diagram	20
14.16	First Received Sound Pulse, Circuit Diagram	23
14.17	Second Received Sound Pulse, Circuit Diagram	24
14.18	Chassis Wind Unit, View of Top	25
14.19	Chassis Wind Unit, View of Bottom	25
14.20	Waveforms	26
14.21	Block Diagram of Data Reduction Technique	31
14.22	The Electronic Data Reduction Apparatus	31
14.23	Photograph and Block Diagram of the Film Reader	32
14.24	Filter Shapes of the Harmonic Wave Analyzers	34
14.25	Effective Filter Shapes at Beginning and End of Frequency Range	34
14.26	Filter Shapes of the High-Pass Filters	37
14.27	High-Pass Filters, Schematic Circuit Diagram	39
14.28	20-kc Amplifiers and Phase Shifters, Schematic Circuit Diagram	41

ILLUSTRATIONS (cont.)

Figure		Page
14.29	Display of Data Reduction Results	42
14.30	Degrees of Freedom and Accuracy of the Spectrum Estimates as a Function of Frequency	44
14.31	Block Diagram of Optimized Data Reduction System	47
14.32	Topography of Field Site and Equipment Locations for Project Prairie Grass	48
15.1	Photograph of Bivane and Heated-Thermocouple Anemometer Mounted on Tripod, and Close-up of Base of Bivane Showing Microtorque Potentiometers and Other Accessory Equipment	63
15.2	Wiring Diagrams of Bivane Power Supply, RC Networks for Speeding Up Response of Azimuth and Elevation Recorders, and the Bivane Microtorque Potentiometers	66
15.3	Wiring Diagrams for Heated-Thermocouple Anemometer Power Supply and the Three Termojunctions of the Transducer	67
15.4	Calibration Curve for Heated-Thermocouple Anemometers Based on Wind-Tunnel Tests at O'Neill, Nebraska During the Summer of 1956	67
15.5	Response of the Bivane and Heated-Thermocouple Anemometer to Simple Sine Waves of Varying Frequency	69
15.6	Photographs of Various Accessory Components of the Fast-Response Instrumentation System Used in the Prairie Grass Structure Measurements	70
15.7	Schematic Diagram Showing Longitudinal and Transverse Spacings of Instrument Assemblies During Structure Experiments	72
15.8	Wiring Diagram for Master Electrical Timer that Controlled the Programming of the Meteorological Observations During the Prairie Grass Experiments	75
16.1	System Block Diagram of Automatic Data-Processing Machine with Esterline-Angus Paper Tape Input	81
16.2	Photograph of Assembled Equipment	82
16.3	Mechanical and Optical Mechanisms of Reader for Esterline-Angus Paper Tape	84

ILLUSTRATIONS (cont.)

Figure		Page
16.4	Tape Reader, Block Diagram	85
16.5	Potentiometer Multiplying Circuit	87
16.6	Cathode Follower Operational Amplifiers, Circuit Diagram	89
16.7	Accumulator, Block Diagram	91
16.8	Pulse Distributor, Block Diagram	92
16.9	Timing Unit, Block Diagram	95
16.10	Pulse Divider, Block Diagram	95
16.11	Automatic Stop Control, Block Diagram	99
16.12	Readout Command Unit, Block Diagram	100
16.13	Readout Control Unit, Block Diagram	100
16.14	Accumulator Calibrator Unit, Block Diagram	102
16.15	Electronic Switch and Sweep Circuits, Block Diagram	104
16.16	Conformance of Linearizing Potentiometers	110
16.17	Circuit Diagram of Photomultiplier Head in Tape Reader	117
16.18	Interconnections in Esterline-Angus Tape Reader	119
16.19	Details of Plug-in Units for Esterline-Angus Tape Reader	120

TABLES

Table		Page
14.1	Sonic Anemometer Observations, O'Neill, Nebraska	51
14.2	Cross-Correlation Functions, $R_{12}=\frac{1}{T}\int_0^T f_1(t)\, t_2(t+\tau)d\tau$	52
14.3	Variance and Cross-Spectra Obtained from Sonic Anemometer-Thermometer	53-59
16.1	Conformance to Linearizing Potentiometers	111
16.2	Errors in Velocity Linearizing Operation	114
16.3	Errors in Azimuth and Elevation Angle Procedures	114
17.1	Log of Bivane Data Used to Compute Eddy Wind Variance Spectra	139
17.2	Vector Mean Wind and Standard Deviation of Eddy Wind Components and Azimuth Angle	140-144
17.3	Covariances, Correlation Coefficients, and Gustiness Ratios Computed from Bivane Data	145-150
17.4	Cross-Correlation Coefficients Identified by Run Number, Eddy Wind Component, and Separation Distances of Anemometer Pairs	151-154
17.5	Auto-Correlation Coefficients Identified by Eddy Wind Components; Lag Number, K; and Anemometer Number	155-287
17.6	Smoothed Spectral Density Estimates, U_n, Identified by Eddy Wind Component, Harmonic Number, and Anemometer Number	288-420
17.7	Cross-Correlation Coefficients, T_K^+, Lagged Downwind for N-S Orientation of Anemometer Line; to the East for E-W Orientation. Results are identified by Eddy Wind Component; Lag Number, K; and Separation Distance of Anemometer Pairs	421-483
17.8	Cross-Correlation Coefficients, T_K^-, Lagged Upwind for N-S Orientation of Anemometer Line; to the West for E-W Orientation. Results are identified by Eddy Wind Component; Lag Number, K; and Separation Distance of Anemometer Pairs	484-546
17.9	Smoothed Cospectral Density Estimates, UC_n, Identified by Eddy Wind Component, Harmonic Number, and Separation Distance of Anemometer Pairs	547-609

TABLES (cont.)

Table		Page
17.10	Smoothed Quadrature-Spectral Density Estimates, UQ_n, with the Phase Angle Lagged Downwind for N-S Orientation of the Anemometer Line; to the East for E-W Orientation. Results are Identified by Eddy Wind Component, Harmonic Number, and Separation Distance of Anemometer Pairs	610-672
17.11	Results of Aliasing Experiment for Anemometer No. 2, Run No. 7	673

CHAPTER 14
SONIC ANEMOMETER-THERMOMETER

14.1 PRINCIPLE OF THE SONIC ANEMOMETER-THERMOMETER

V. E. Suomi and J. A. Businger*
University of Wisconsi.

14.1.1 Introduction

The sonic anemometer-thermometer developed at the University of Wisconsin by V. E. Suomi is described in other reports;[1, 2, 3] however, it is desirable to give a somewhat more elaborate and complete discussion of the theory and accuracy of the instrument and of the observation technique. To obtain a fairly complete description, the previous papers are in part duplicated.

The instrument is developed for the purpose of obtaining turbulent components of the wind and temperature, that is, to measure the deviations from the mean values of these quantities. Furthermore, it is important to note that the instrument is never used to measure the wind component in the direction of the mean wind because, in this case, the instrument would generate additional turbulence. Therefore, only the components perpendicular to the mean wind are measured, that is, the vertical and lateral wind components.

14.1.2 Principle of the Sonic Anemometer-Thermometer

An arry consisting of two sound-pulse transmitters (T_1 and T_2) and two receivers (R_1 and R_2) is chosen such that T_1 opposes R_1 and T_2 opposes R_2, their separation being the distance d. The distance between T_1 and R_2, and T_2 and R_1, is much smaller than distance d. (See Fig. 14.1.) As will be discussed in Section 14.1.3, the difference in transit time for the sound pulses traveling in opposite directions is proportional to the wind component parallel to d, and the sum of the transit times is

*Dr. Businger's present affiliation: University of Washington, Seattle, Washington

proportional to the square root of the virtual temperature. However, we are mainly interested in the fluctuations of the wind component and the temperature component. It appears that these fluctuations, within certain limits, are proportional to the fluctuations in the difference and the sum of the time intervals, respectively.

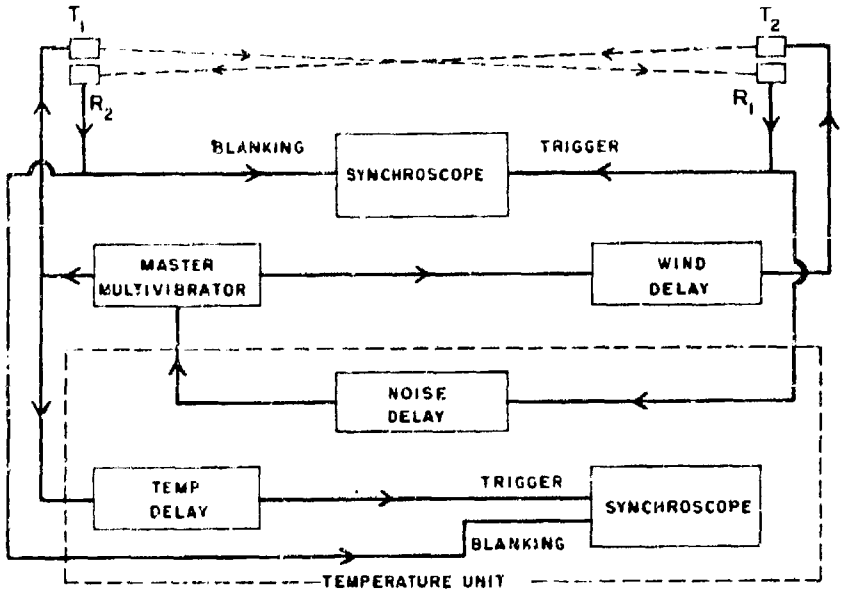

Fig. 14.1 Block diagram showing principle of sonic anemometer-thermometer

Figure 14.1 is a block diagram of the basic units required for the detection of the desired time intervals. A pulse generator fires first the sound-pulse transmitter T_1, which gives a short burst of 80-kc sound. After a delay of 100 to 200 microseconds, depending on the range of wind velocities being measured, T_2 is fired. This time delay, D_1, is chosen so that the signal always will arrive at R_1 first. Now it is possible to use the signal received by R_1 to trigger the x-axis sweep on a timing device such as a synchroscope. The reception of R_2 is then used to blank the sweep. The sweep length is a measure of the wind component in the direction of the array d. The true zero-wind point is easily established by simply measuring the duration of the delay D_1 directly and

subtracting it from the observed sweep length.

This wind delay time is essential for detecting the received pulses in a consistent sequence. Without this delay time, it would not be possible to trigger and blank the scope correctly, as is apparent from the block diagram.

To be able to detect the sum of the transit times necessary for temperature measurements, two additional delay units are required in the circuit:

First, there is a noise delay D_2 which adds a constant time interval to the received pulse from R_1 in order to synchronize the pulse generator. This noise delay merely assures that each sound signal is received from the transmitter on the opposite end of the array before the adjacent transmitter is fired. It is clear that R_2 cannot distinguish the signal from T_2, one meter or more away, from the signal T_1, only one centimeter away, despite any directional characteristics of the transducers if sound is received from each transmitter at the same time.

Second, there is a time delay D_3 which is of the same order (but just a little bit smaller) as the sum of the transit times $t_1 + t_2$ and the delay times $D_1 + D_2$. When a pulse from the pulse generator (delayed time D_3) triggers a synchroscope and the consecutive pulse from R_1 blanks the scope, then the sweep length is a measure of the sum of the transit time $t_1 + t_2$. The timing sequence is shown in Fig. 14.2, which illustrates the principle of the sonic anemometer-thermometer.

More technical details of the sonic anemometer-thermometer are given in Section 14.2.

14.1.3 Sonic Anemometer-Thermometer Theory

The principle of the sonic anemometer-thermometer is based on the accurate measurement of the velocity of sound over a given path. The velocity of a sound wave can be given by:

$$C = 20.067 \left\{ T \left(1 + 0.3192 \frac{e}{p} \right) \right\}^{\frac{1}{2}} \qquad (1)$$

where C is the velocity, T is the absolute temperature, e is the vapor

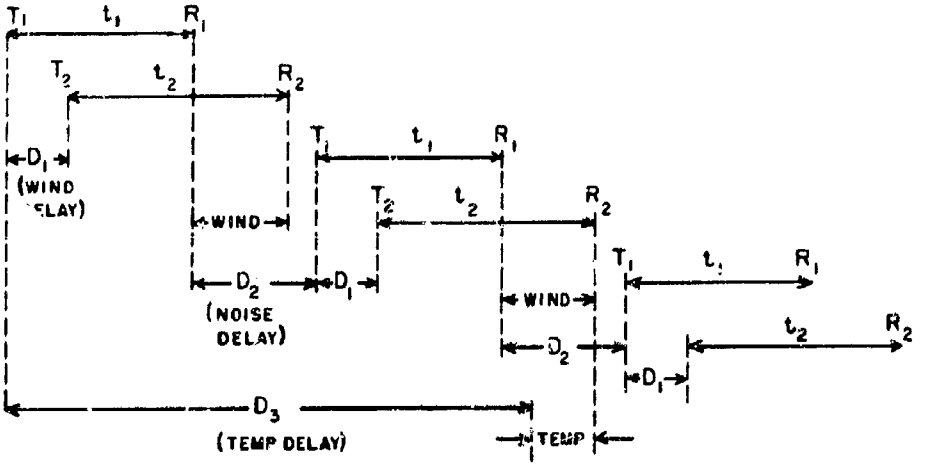

$$\Delta t\ (\text{WIND}) = (t_2 + D_1) - t_1$$

$$\Delta t\ (\text{TEMP}) = (t_1 + t_2 + D_1 + D_2) - D_3$$

Fig. 14.2 Timing sequence of sonic anemometer-thermometer

pressure, and p is the atmospheric pressure. The effect of water vapor on the velocity of sound is usually less than 1 percent. Because we are interested in the fluctuations, we must consider the influence of the temperature and humidity fluctuations on the velocity of sound. Instead of Eq. (1), we have then:

$$C = \overline{C} + C' = 20.067\,\overline{T}^{\frac{1}{2}}\left(1 + 0.1596\frac{\overline{e}}{p}\right)\left(1 + \frac{1}{2}\frac{T'}{\overline{T}} + \frac{0.1596\ e'/p}{1 + 0.1596\ \overline{e}/p}\right) \quad (2)$$

From Eq. (2) we see that C' usually is less than 1 percent of $\overline{C}$.

Because the sound wave is propagated in the air, the wind will affect the apparent speed of the sound at a fixed point. Suppose the wind V has a component V_d in the direction from T_1 to R_1 (see Fig. 14.3). The sound pulse traveling from T_1 to R_1 will have a velocity of V_d + C cos a, where $\sin a = \frac{V_n}{C}$ and V_n is the wind component perpendicular to d. In this case, the transit time t_1 is:

$$t_1 = \frac{d}{C \cos a + V_d} \quad (3)$$

Similarly, the transit time t_2 of the pulse traveling from T_2 to R_2 is:

$$t_2 = \frac{d}{C \cos \alpha - V_d} \qquad (4)$$

The difference in transit time of the sound pulses traveling in opposite directions is then:

$$t_2 - t_1 = \frac{2d\,V_d}{C^2 - V^2} \qquad (5)$$

because $C \cos \alpha = (C^2 - V_n^2)^{1/2}$, where V_n is the velocity component normal to the path d; and $V^2 = V_n^2 + V_d^2$ where V is the total wind. Equation (5) is derived in a more general and exact manner by Blochintzev.[4] The assumptions are that the inhomogenities in the air are larger than the wave length of the sound and that the sound traveling in each direction follows the same path.

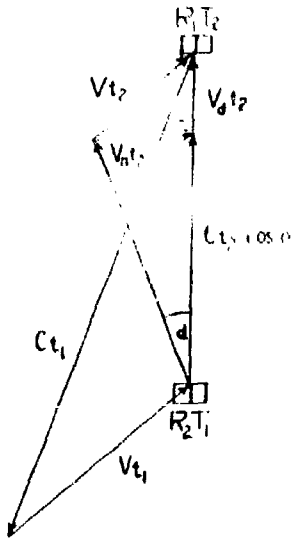

Fig. 14.3 Theory of wind measurement

Because we are only interested in the fluctuations, we write instead of Eq. (5):

$$\bar{t}_2 - \bar{t}_1 + (t_2 - t_1)' = \frac{2d\,\bar{V}_d}{\bar{C}^2 - \bar{V}^2} \left\{ \left[1 + \frac{V_d'}{\bar{V}_d} \right] \left[1 - \frac{2\bar{C}C' - 2\bar{V}V'}{\bar{C}^2 - \bar{V}^2} \right] \right\} \qquad (6)$$

neglecting $\frac{C'^2 - V'^2}{\bar{C}^2 - \bar{V}^2}$ and higher order products. Usually V_d will be a component of the wind perpendicular to the mean wind, so $\bar{V}_d$ will be very small and consequently:

$$\left| \frac{V_d'}{\bar{V}_d} \right| >> \left| \frac{2\bar{C}C' - 2\bar{V}V'}{\bar{C}^2 - \bar{V}^2} \right| \quad ; \text{ the term on the right-hand side is very small compared to one.}$$

Furthermore, $\overline{C}^2 \gg \overline{V}^2$, so a very good approximation to Eq. (6) is:

$$\overline{t}_2 - \overline{t}_1 + (t_2 - t_1)' = \frac{2d\,\overline{V}_n}{\overline{C}^2} + \frac{2d\,V_n'}{\overline{C}^2}$$

$$(t_2 - t_1)' = \frac{2d\,V_n'}{\overline{C}^2} \tag{7}$$

This means that fluctuations in the difference of the transit times are directly proportional to fluctuations in the wind component under consideration and that temperature fluctuations have a negligible influence, less than 1 percent.

The sum of the transit times may be considered in a similar way. Adding Eqs. (3) and (4):

$$t_1 + t_2 = \frac{2d\,C\cos\alpha}{C^2 - V^2} \tag{8}$$

Splitting into mean and fluctuating parts, using Eq. (2) and omitting higher order terms gives:

$$\overline{t}_1 + \overline{t}_2 + (t_1 + t_2)'$$

$$= \frac{2d}{\overline{C}}\left(1 - \frac{1}{2}\frac{\overline{V}_n^2}{\overline{C}^2} - \frac{\overline{V}_n V_n'}{\overline{C}^2} + \frac{\overline{V}^2}{\overline{C}^2} + 2\frac{\overline{V}V'}{\overline{C}^2} - \frac{1}{2}\frac{T'}{\overline{T}} - \frac{0.1596\,e'}{p}\right) \tag{9}$$

Because V_n is usually in the direction of the mean wind, we may write (taking only the fluctuating part):

$$(t_1 + t_2)' = \frac{2d}{\overline{C}}\left(\frac{\overline{V}V'}{\overline{C}^2} - \frac{1}{2}\frac{T'}{\overline{T}} - 0.1596\frac{e'}{p}\right) \tag{10}$$

In the right-hand side of Eq. (10), the term $\frac{1}{2}\frac{T'}{\overline{T}}$ is usually larger than the other two terms. However, estimates of the order of magnitude are required to determine with what accuracy $(t_1 + t_2)'$ is a measure of T'.

Because these quantities are fluctuating, the estimates can best be

given in their rms values or in their variances. It is important to know whether or not the quantities are correlated because the error introduced by a correlated quantity is much larger than the error introduced by a non-correlated quantity.

In many cases a high correlation between T' and e' is found. This makes the error introduced by e' comparatively large but, at the same time, it enables us to correct for it.

Because of the high correlation, we may write with sufficient accuracy:

$$T' = \text{const}\, e' \quad \text{or} \quad \frac{T'}{e'} = \text{const} \tag{11}$$

Using this relation in the Bowen ratio β, which is the ratio of the sensible heat flux to the latent heat flux, we see:

$$\beta = \frac{C_p \rho p}{0.623 L \rho} \frac{\overline{w'T'}}{\overline{w'e'}} \simeq 0.68 \frac{\overline{w'T'}}{\overline{w'e'}} \approx 0.68 \frac{T'}{e'} \tag{12}$$

where L is the latent heat of vaporization = 590 cal g^{-1}

p is the pressure $\approx$1000 mb

C_p is specific heat at constant pressure = 0.24 cal $g^{-1}\,°C^{-1}$

When β is known, then it is useful to write for Eq. (10), using Eq. (11):

$$(t_1 + t_2)' = \frac{2d}{\bar{C}} \left\{ \frac{\overline{VV'}}{\bar{C}^2} - \left(\frac{1}{2\bar{T}} + \frac{0.108}{\beta p} \right) T' \right\} \tag{13}$$

So, it appears possible to correct for the fluctuations in the water vapor.

The wind fluctuations are probably somewhat correlated to the temperature fluctuations, but not so clearly as the water vapor fluctuations. Therefore, it is important to require that

$$|T'| \gg \frac{2\bar{T}\bar{V}|V'|}{\bar{C}^2}$$

Concluding, we may say that the sonic anemometer is a very good instrument for measuring wind fluctuations. The sonic thermometer, however, only measures accurate temperature fluctuations above a dry surface

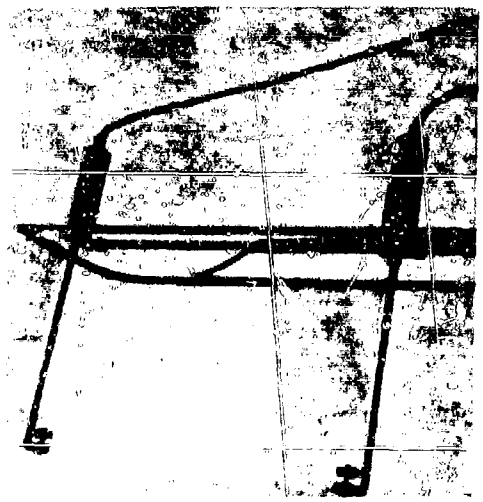

Fig. 14.4 Array of sonic anemometer heads



Fig. 14.5 Sample record of sonic anemometer observations



Fig. 14.6 Combination of four-channel synchroscope and camera. The camera is open and shows the set-up for simultaneous exposure of four film rolls

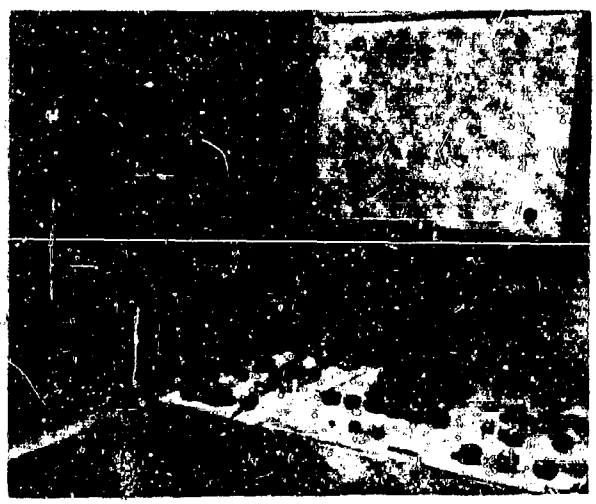

Fig. 14.7 Combination of synchroscope, camera, and wind and temperature chassis

with weak winds. Above wet surfaces, it measures a combination of temperature and humidity fluctuations, which can be separated when the Bowen ratio is known.

14.1.4 Observation Technique

For field experiments, the sonic anemometer sound-pulse transmitter and receiver units are mounted in the desired position on a tower, usually for measurements of the vertical wind component. A few measurements were made of the lateral wind component. The installation is shown in Fig. 14.4.

The wind and temperature information presented on a synchroscope are lines of light whose length changes, depending on the direction and magnitude of the fluctuations. A special 4-channel synchroscope was built to observe simultaneously four sonic anemometer-thermometer signals. Thus it was possible to record concurrently two winds and two temperatures or three winds and one temperature.

The four variable lines of light on the scope are recorded on film with a specially designed 35-mm camera. The film is advanced at a constant rate normal to the image of the synchroscope trace. The shutter remains open for the entire length of a run. The film speed is adjusted so that the fluctuations of the wind are recorded in sufficient detail. Film speeds of three to six inches per minute give satisfactory records. The variable length of the line on the scope appears as a variable area on the film. A sample record is shown in Fig. 14.5. The camera contains four rolls of film which are driven by one synchromotor. On each of the film rolls, one of the scope signals is focused so that the four signals are recorded simultaneously on four separate films moving exactly at the same speed. This is very important with respect to the data reduction technique (see Section 14.3.3). The combination of camera and 4-channel synchroscope is photographed in Figs. 14.6 and 14.7.

The time-scale calibration on the applied sweep of the scope is obtained with a 100-kc oscillator. This oscillator gives pulses 10 microseconds apart in time. The scope shows these pulses as dots; the distance between two dots corresponding to the 10-microsecond separation.

On the film these dots appear as lines. The observed data then can be compared with the obtained time scale.

14.1.5 Limitations in Accuracy and Range

There are several factors to be considered concerning the accuracy of the instrument.

The most important source of error is caused by the shape of the sound pulse. The sound generator gives a burst of 80-kc sound. The amplitude of the pulse is built up in a finite time interval, usually in about 2 cycles of the sound wave. The received pulse cannot be better than the originally transmitted pulse; therefore, it also requires a certain time interval to build up its amplitude. At a fixed level, for example one-half amplitude of the pulse, the time-measuring device is triggered. Although a pulse with an infinite steep slope is desirable, the present situation does not necessarily lead to errors, provided the shape and amplitude of the received pulse is constant. However, this is not the case. The sound pulse is attenuated during its travel through the air in a fluctuating manner, because of the turbulence itself. Consequently, the fixed level for the time-measuring device is triggered by varying positions on the pulse and therefore at different times. These time fluctuations are usually less than 3 microseconds. However, when the triggering level jumps from one sound wave to the next, the time fluctuations are about 12 microseconds. This latter case can be detected on the scope, but it cannot always be avoided. Therefore, it is important that the sound pulses are strong and have a large signal-to-noise ratio.

It is difficult to determine the magnitude of the error due to fluctuations in the sound-pulse amplitude, with respect to the signal. An estimate of this error is between 3 and 10 percent of the rms value of the wind.

When the sonic anemometer is not mounted exactly vertical for measuring the vertical wind component, then an error is introduced because a part of the signal is due to a horizontal wind component. The error is maximum when the deviation from the vertical orientation is in the direction of the mean wind u. Suppose now that the angle of the array with the verti-

cal is β. The turbulent component of the wind in the direction of the array V'_d is then:

$$V'_d = w' \cos\beta + u' \sin\beta \qquad (14)$$

It is not difficult to maintain $\tan\beta < 0.1$; besides, in the high frequency end of the spectrum, u' is of the same order as w'. Therefore, in this range of the spectrum the error in the variance estimates is negligible. However, in the low frequency range the variance of u' is much larger than the variance of w'. The error in the total variance or the rms value of w' may therefore be considerably larger. According to this error, there will be a tendency to overestimate the total variance of w' by 10 percent under the worst conditions.

A less important error is made because the transmitting and receiving heads are located 1.5 cm from each other and not exactly at the same place in the acoustic array. (Figure 14.4 illustrates this point.) Since the sound paths cross, the effective spacing is only ~0.75 cm. Gerhardt, Crain, and Smith[5] have made measurements of the temperature difference observed between two rapid-response thermistors as a function of the distance separating them. According to these measurements, the error in rms values of the wind and temperature fluctuations cannot be expected to exceed 2 percent.

A systematic error is made in the calibration because the oscillator used for this purpose has an error of the order of 2 percent, which corresponds to an error in the rms values of 4 percent.

Finally, there is an error which is difficult to trace back because of fluctuations in the power supply. The signals on the scope are sensitive to changes in the load of the main power supply. Unfortunately, there are no records of measurements of the voltage at the input of the equipment. It is assumed, however, that the fluctuations in the main power line are of relatively low frequency and will not affect the variance spectra of wind and temperature.

The range of the instrument could be varied from 40 microseconds full scale to an unlimited long-time scale. In the most sensitive setting of the instrument, fluctuations of 2 cm/sec could be detected.

14.2 CIRCUIT DETAILS FOR THE SONIC ANEMOMETER-THERMOMETER

V. E. Suomi, R. J. Parent, and H. Miller
University of Wisconsin

14.2.1 Introduction

This section presents a number of diagrams which are self-explanatory for the reader who is used to electronic circuits. A block diagram of the sonic anemometer is given in Fig. 14.8 which indicates the main units of the instrument. This block diagram is an extension of Fig. 14.1. The circuit enclosed in the lower right dashed box is the equipment that can be omitted if only the anemometer is desired. The timing sequence has been explained in Section 14.1.2 and Fig. 14.2. Special boxes in the block diagram refer to the diagrams of the circuits.* The regulated power supply, not shown in the diagram, is given in Fig. 14.9. In the following subsections, a brief discussion is given of the main units.

14.2.2 Transducer, Preamplifier, and Pulse Generator Unit

Two of these units or sound heads are needed to make up one axis of the acoustic array (see Section 14.1.2). There are two 80-kcps ADP, 45° Z-cut piezoelectric crystals which act as a sound source and as a receiver for the opposite channel in each sound head. The preamplifier for the receiving crystal contains a voltage amplifier and a cathode follower amplifier so that the device will operate satisfactorily at the end of 500 feet of cable. The pulse generator is a thyratron and pulse transformer circuit which, when triggered from the main control chassis, shocks the transmitting ADP crystal into oscillation at its resonant frequency. These units are shown in Figures 14.10, 14.11, and 14.12. The diagram of the circuit is given in Fig. 14.13.

14.2.3 Master Multivibrator

This circuit is the main source of timing signals for the whole

* In schematic circuit diagrams all resistors are 1/2-watt, 10 percent, unless otherwise specified. K is kilohms; M is megohms. All capacitors in decimals are in microfarads; whole numbers are micromicrofarads.

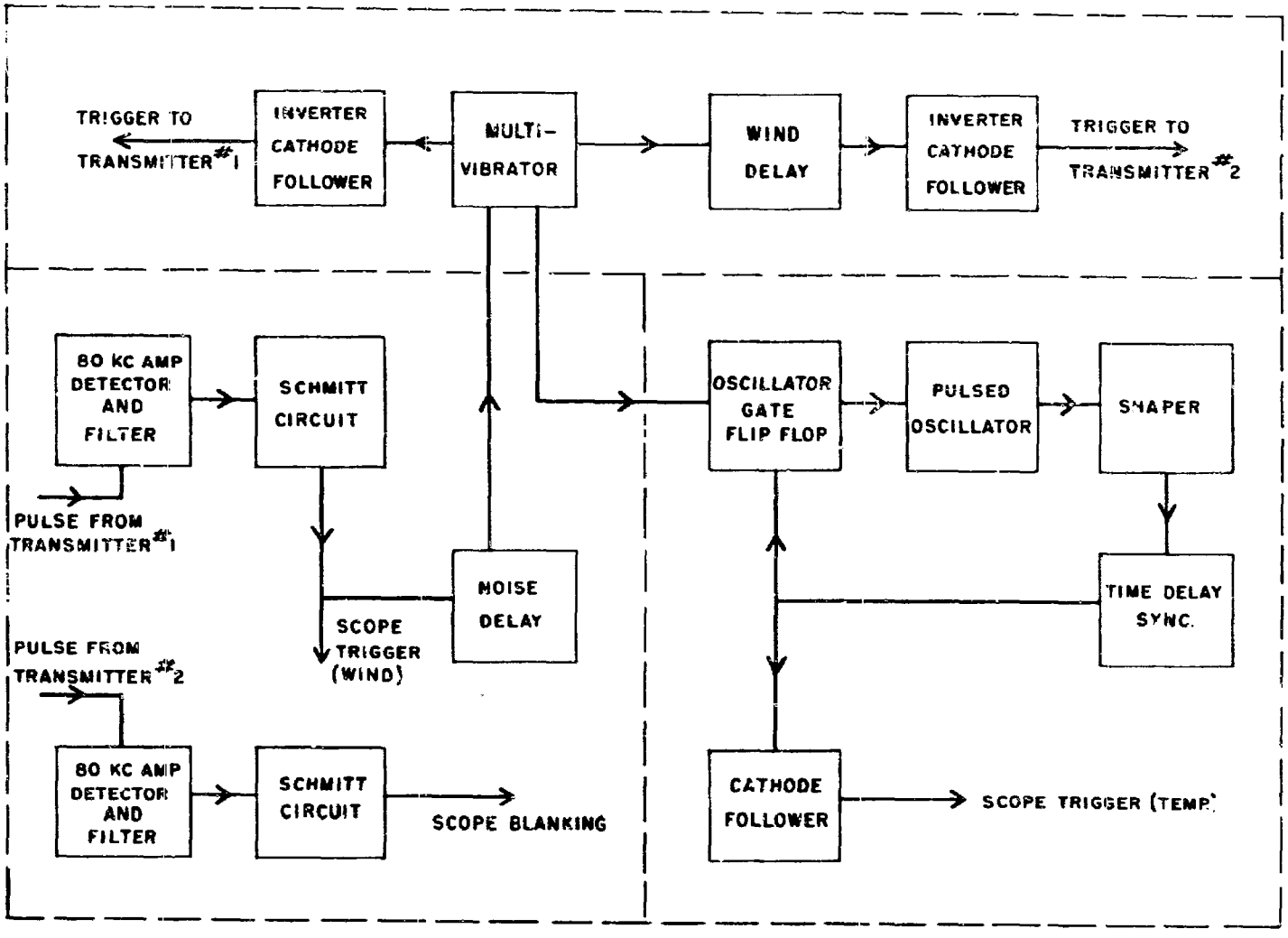

Fig. 14.8 Block diagram of sonic anemometer-thermometer(extension of Fig. 14.1)

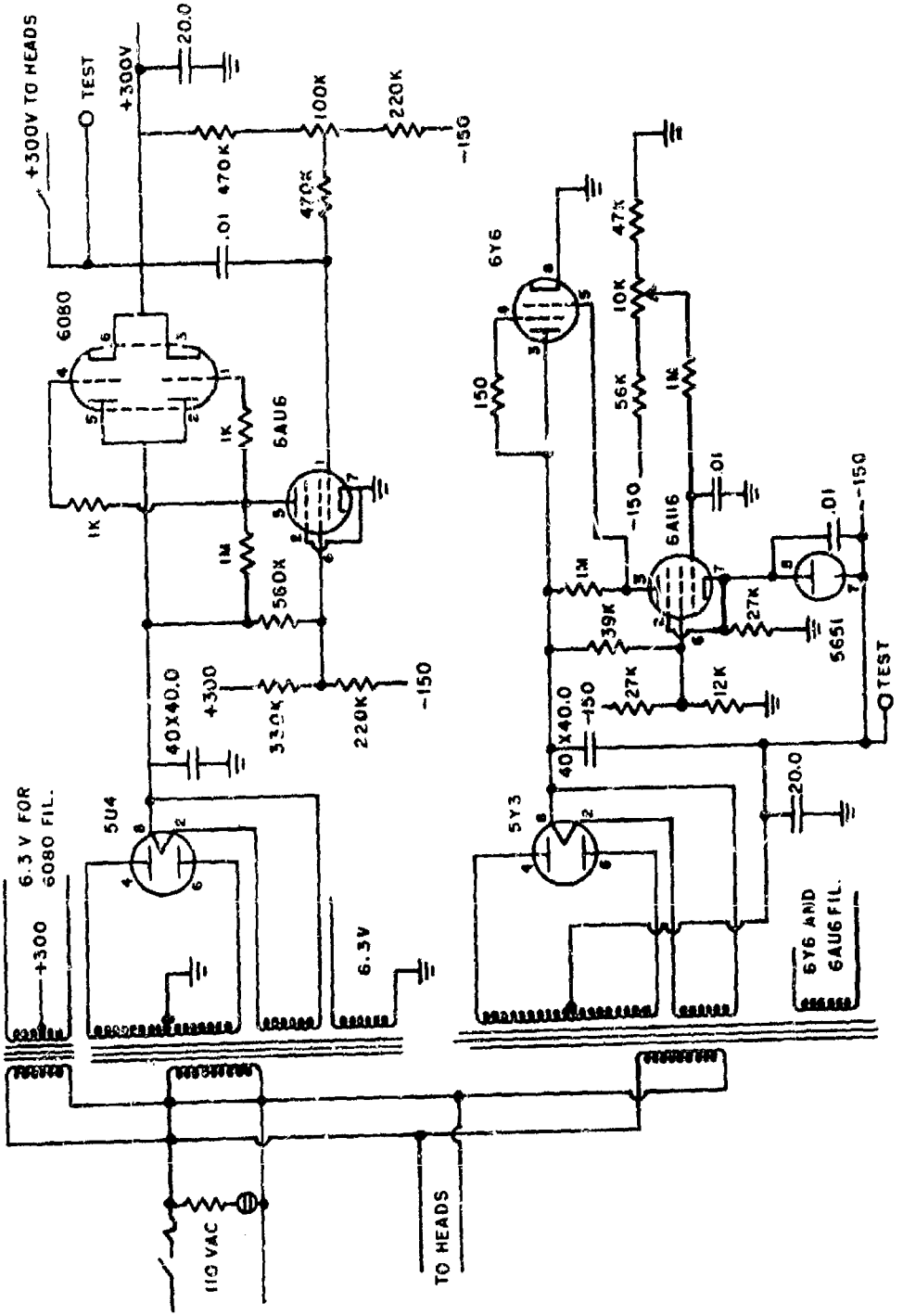

Fig. 14.9 Power supply, schematic circuit diagram



Fig. 14.10 Display of sonic anemometer heads



Fig. 14.11 Display of sonic anemometer heads and preamplifier



Fig. 14.12 Sonic anemometer preamplifier

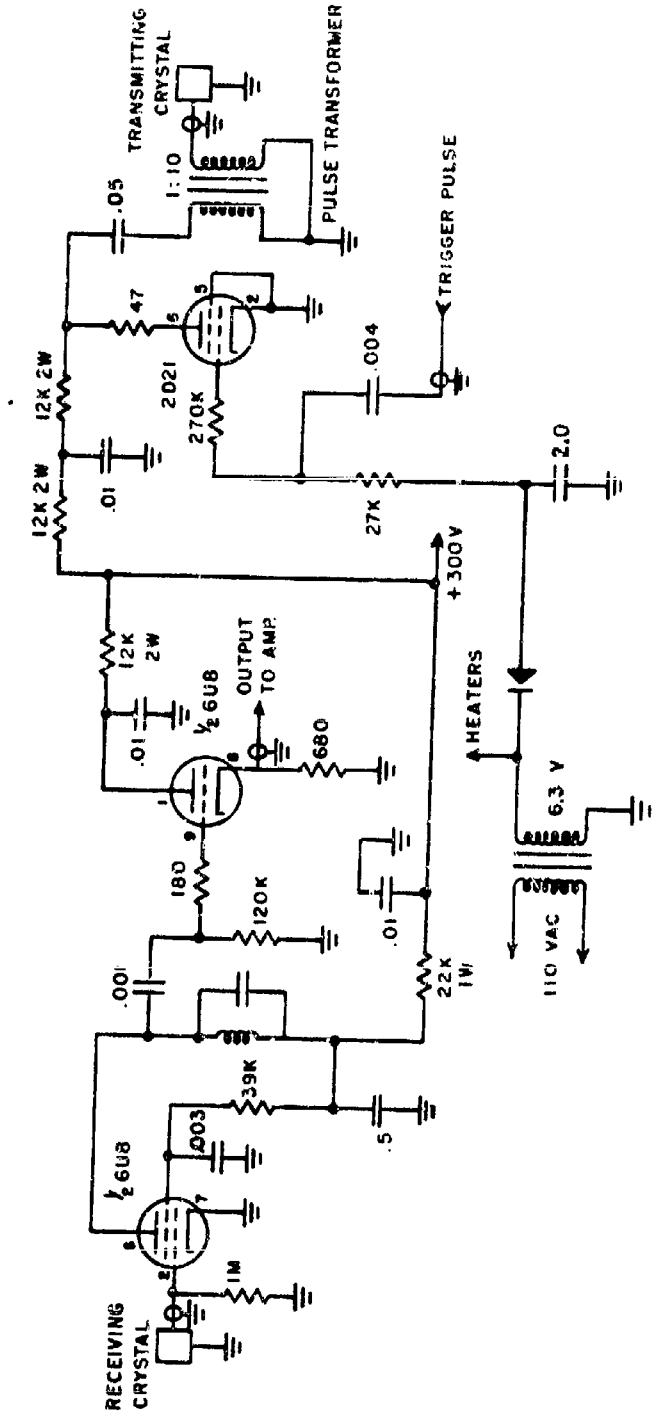

Fig. 14.13 Receiver and transmitter, schematic circuit diagram

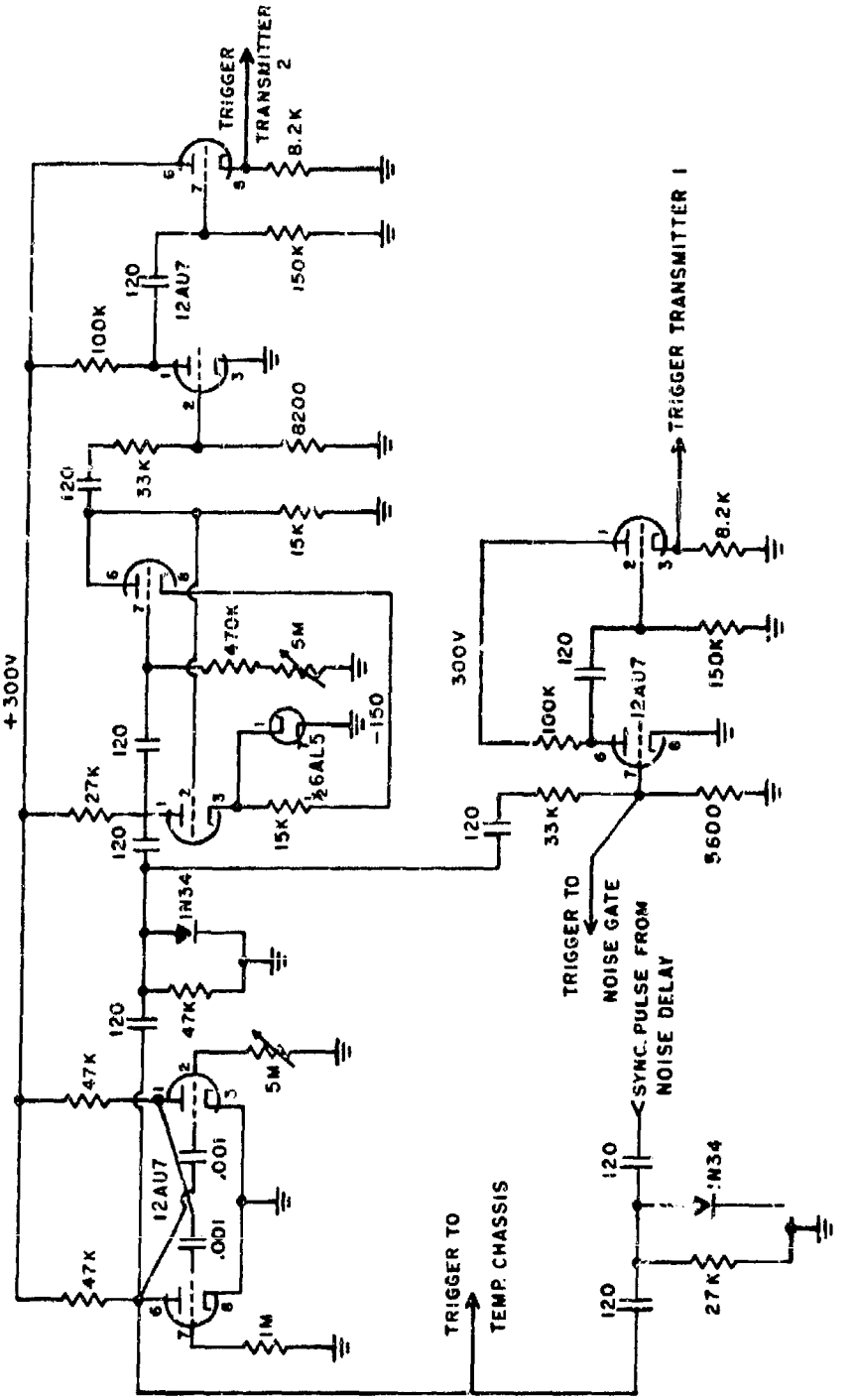

Fig. 14.14 Transmitter pulsing circuit diagram

instrument. When the device is used only for wind measurements, the multivibrator can be free-running at a frequency which, on the low end, is determined by the number of wind measurements per second that one wishes to make. The frequency is limited on the upper end by recovery time of the delay and sweep circuits, or by the time it takes the sound pulse to travel through the array. When the instrument is used as a combination anemometer-thermometer, the master multivibrator must be operated at a frequency that will permit it to be synchronized from the signal from R_1. Figure 14.14 shows a diagram of this circuit.

14.2.4 Short Time Delay Circuits

Each delay circuit is a one-shot multivibrator variable time delay unit. One circuit is used to obtain D_1, the wind delay (see Fig. 14.14). Another similar circuit but of different time delay is used for what we have termed a "noise delay," or more properly, an interference eliminating delay (see Fig. 14.16). (The purpose of the noise delay is discussed in Section 14.1.2.) Each of these short time delay circuits must be variable and must have a relative timing stability, once set, to better than 1 percent of their preset values.

14.2.5 Long Time Delay Circuits

This circuit is used to obtain D_3, the "temperature delay," necessary for temperature information. It is not needed if only wind measurements are desired. The information needed for temperature measurements is the difference of the round-trip time, $t_1 + t_2$, and the long delay, D_3. This difference measurement requires a much better timing stability than is possible from one-shot multivibrators, phantastrons, or similar time delay circuits. The timing stability required is one part in ten thousand—a time easily obtained in an oscillator. The circuit used is a time delay circuit, synchronized by a pulsed oscillator, and followed by a short delay for fine adjusting of the total delay. The time delay is varied by changing the time constant of the circuit. This circuit is shown in Fig. 14.15.

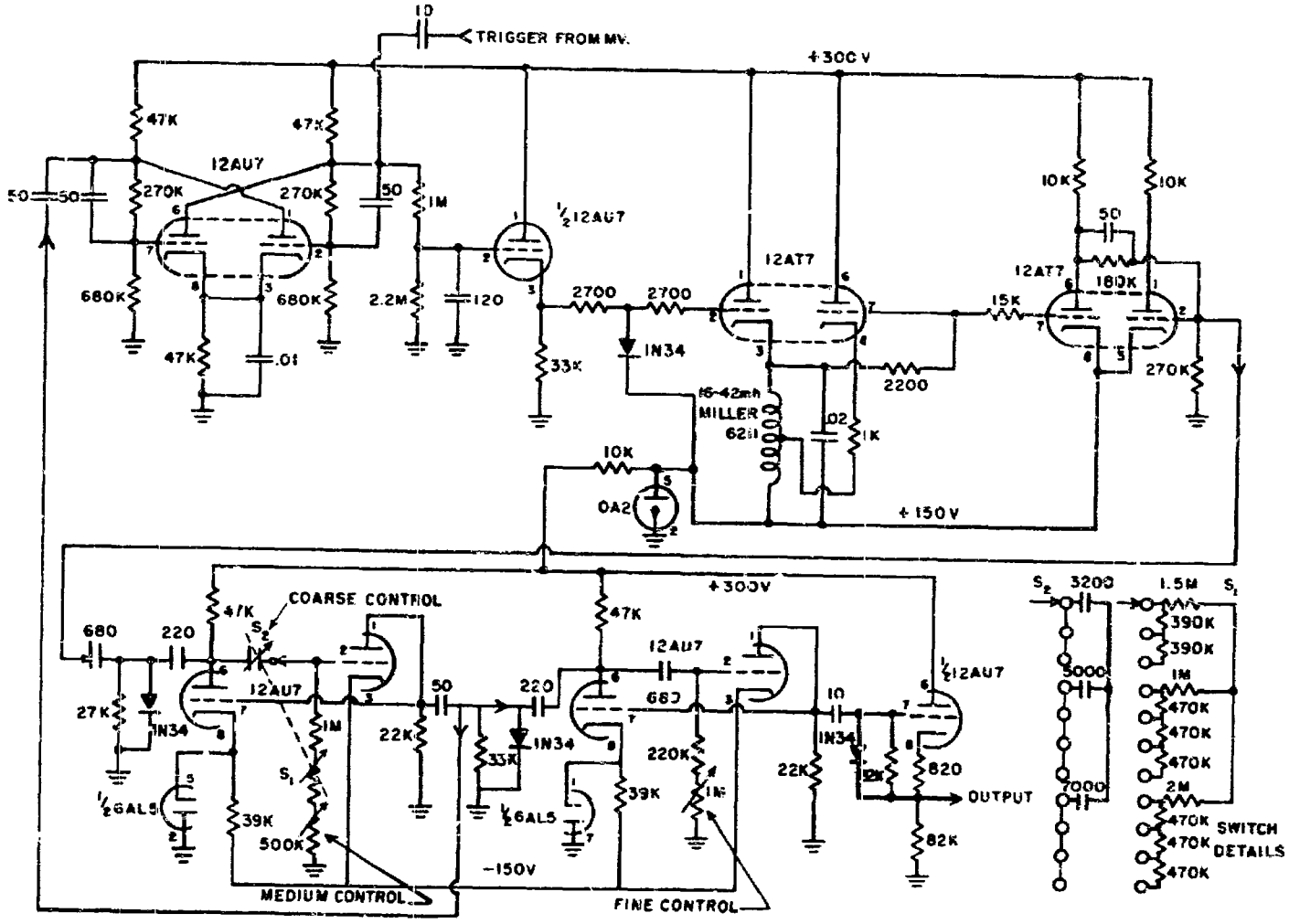

Fig. 14.15 Temperature unit, schematic circuit diagram

14.2.6 80-kcps Band Pass Amplifiers, Detectors, and Schmitt Circuits

For the two received sound pulses, two identical channels are required. (See Figs. 14.16 and 14.17.) Each channel has a tuned 2-stage amplifier followed by a detector and amplifier. The amplified sound pulse triggers a Schmitt circuit. This action is controlled by the Schmitt circuit level-selecting control which determines the point on the sound pulse at which it triggers.

In the discussion on the accuracy of the sonic anemometer (Section 14.1.5), the fluctuations in the amplitude of the detected sound pulse appeared to be the most important source of error. To reduce this error, a circuit for automatic gain control was designed. This circuit is also shown in Figs. 14.16 and 14.17. Unfortunately, it was not yet in operation during the observations at O'Neill in 1956.

Figures 14.18 and 14.19 are photographs of the wind chassis which contain the circuits shown in Figs. 14.9, 14.14, 14.16, and 14.17.

14.2.7 Waveform

The operation of the sonic anemometer-thermometer will be better understood by a study of the oscillograms showing waveforms at various points in the circuit. We begin with the waveform on the plate of the master multivibrator (waveform 1 in Fig. 14.20). After differentiation, polarity reversal, and power amplification, a spike (see waveform 2) is available at a low impedance level to trigger T_1 at the end of a 500-foot cable. Meanwhile, the same signal (waveform 1) triggers a one-shot delay multivibrator to form the adjustable wind delay, Δ_1, shown in waveform 3. The delayed signal is differentiated, polarity reversed, and power amplified to form another spike (waveform 4) which triggers T_2 at the end of the cable. A study of the timing marks will show that T_2 is fired about 200 microseconds after T_1 (one division on the horizontal axis corresponds to 200 microseconds). Up to this point, no circuit operation depends on any received sound signals. A free-running master multivibrator is satisfactory if only wind measurements are desired. Before discussing how the master multivibrator must be synchronized for temperature

signals, it will be helpful to consider the circuit operation in the receivers.

Waveforms 5 and 6 are the 80-kcps amplified signals from R_1 before and after the detector diode 1N34. The smooth envelope signal is from T_1 on the opposite end of the array. The second larger and more variable signal is "noise" from T_2, located right next to R_1. Waveform 5 shows that a small amount of noise occurs at the same time as the spike for T_2. This probably represents acoustic coupling through the mount since the velocity of sound in metals is much higher than that in air. Most of the noise, however, occurs a short time later via air coupling. Transit time t_1 is given by the distance separating the spike for T_1 (waveform 2) and the smooth received pulse in waveforms 5 and 6.

Waveforms 7 and 8 are corresponding signals from receiver 2. Note that the smooth sound pulses from R_1 and R_2 in waveforms 5 and 7 are separated about the same distance as the wind delay D_2 shown in waveform 3. Actually, the wind information is derived from the difference in these two times.

The rise times of the detected sound signals, waveforms 6 and 8, are far too slow for any accurate timing to be accomplished. The rise time is reduced in each case by amplification in a 6AK5 amplifier, one for each channel, and then fed to a level-selecting Schmitt circuit. The level-selecting feature insures that the same portion of the waveform will be used in each signal. Since the level-selector circuit is amplitude sensitive, provision for keyed automatic gain control for receivers 1 and 2, which can be used to hold the amplitude of the received pulses very nearly constant, can be actuated by a switch.

Wind data presented on a synchroscope will be available if the negative going portion of the waveform from the Schmitt circuit of R_1 is shaped as shown in waveform 10 and used to trigger the synchroscope sweep, and the corresponding signal from channel 2 is used to initiate waveform 11 for blanking (Z axis) of the sweep or to displace (Y axis) it.

A gated clamp on the grids of the third 6AK5 (in Figs. 14.16 and 14.17) eliminates any difficulty arising from noise signals if the noise signals occur before the desired sound signal. This will always be true

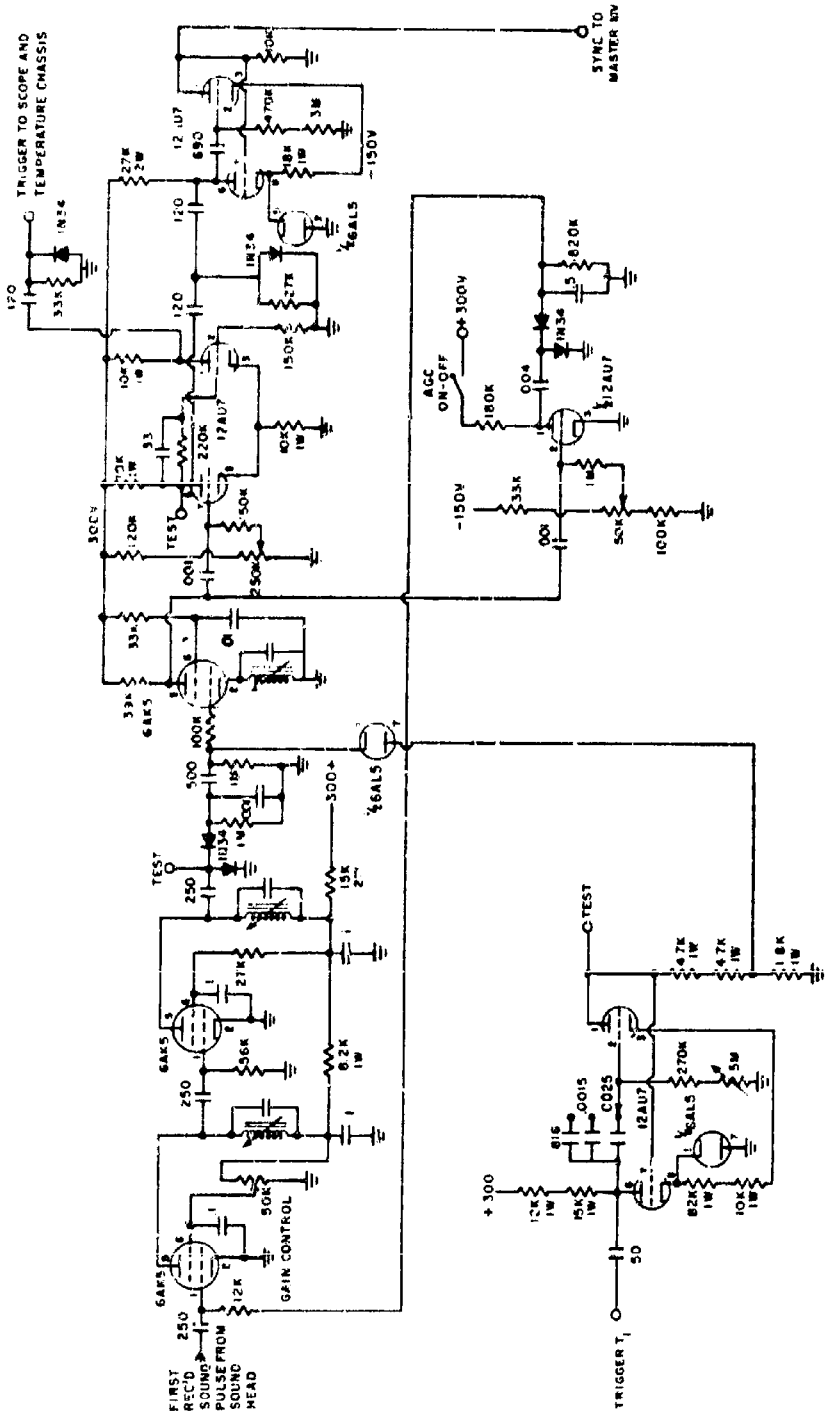

Fig. 14.16 First received sound pulse circuit diagram

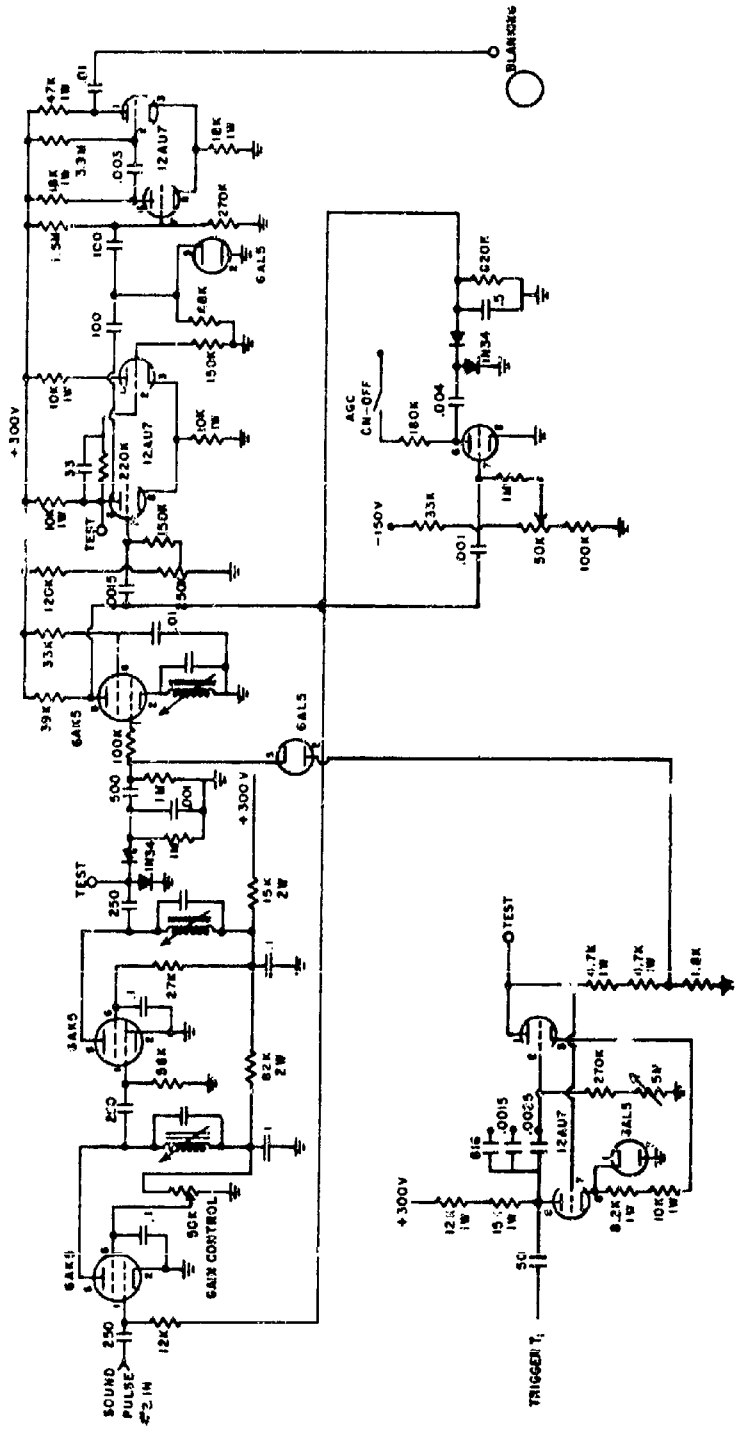

Fig. 14.17 Second received sound pulse circuit diagram

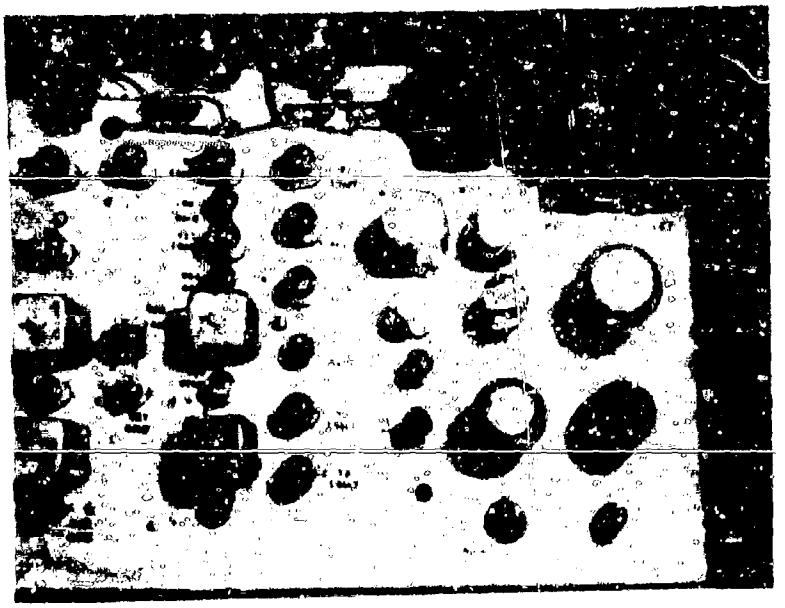

Fig. 14.18 Chassis wind unit, view of top



Fig. 14.19 Chassis wind unit, view of bottom

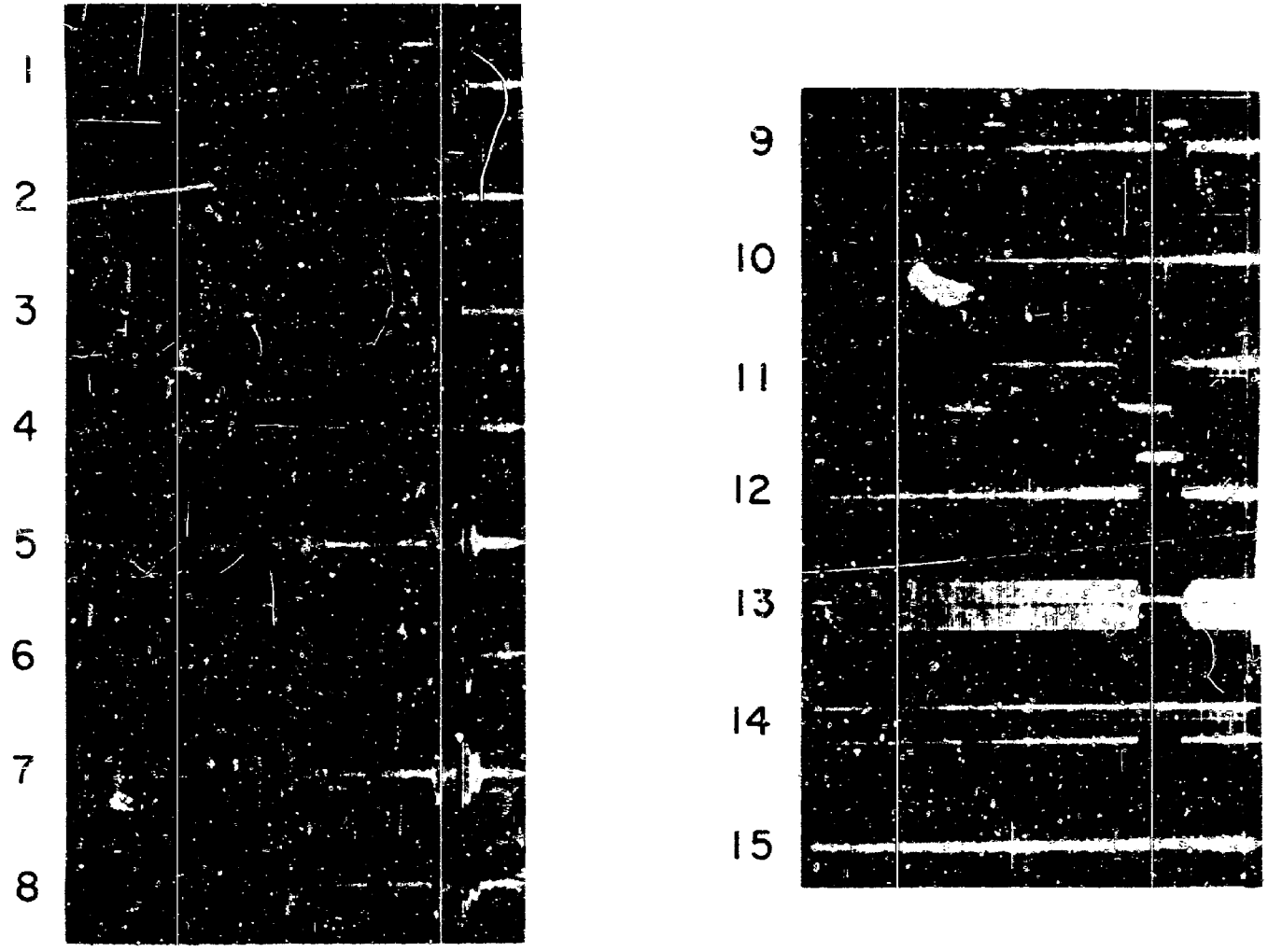

Fig. 14.20 Wave forms

for the received pulse from T_1 , since the signal is always sent first. If the repetition period of the master multivibrator is somewhat longer than the sonic transit time, it will also be true for the second channel since the sound is received before any new noise is generated. However for temperature measurement, it is necessary to synchronize T_1 with the received signal from R_1 . The time necessary for the noise from T_1 to die down to a level below that necessary for the level-selecting circuit of R_2 to be able to detect the signal from T_2 (instead of the noise from T_1), is considerably longer than D_1 , the wind delay. This difficulty is removed by adding an additional delay, called the noise delay, so both sound pulses can be received before any new noise is generated. The noise delay circuit is shown at the lower left of Figs. 14, 16 and 17. The noise delay signal is shown as waveform 9. Note that the negative-going portion of the master multivibrator (waveform 1) is synchronized by the end of the noise delay.

Signals from the pulsed oscillator and time delay, which make up the precision long-time delay, are shown as waveforms 13, 14, and 15. Waveform 13 is the output of the pulsed oscillator. Note that it is started at the same time T_1 is fired. Waveform 14 shows the shaped pulses that appear will depend on the length of the time delay. Waveform 15 is the output of the long delay, which is used to trigger the synchroscope temperature sweep.

14.3 DATA REDUCTION TECHNIQUE

J.A. Businger*
University of Wisconsin

14.3.1 Introduction

A description of the analog data reduction technique adopted for obtaining the variance spectrum of one single-time series is given in Reference 6. This technique has been elaborated for the data reduction of two simultaneous time series. It is now possible to obtain, besides the variance spectra, the cross-spectra of two simultaneous time series, for example, wind and temperature observations at the same place.

There are several reasons why the analog data reduction technique is more attractive than the digital technique in connection with the sonic anemometer data. These data are available on film and can be used immediately with the analog method; whereas, for the digital method, these data have to be converted to punch cards. Furthermore, the accuracy of the analog method is easier to optimize over the entire frequency range of interest than is possible with the digital method. The major drawback is that the analog computer is less reliable than the digital computer and therefore has to be tested frequently.

14.3.2 The Applied Transformation from Time Series to Spectra

The mathematical formulation of the Fourier transforms of time series is developed in several publications. For publications discussing spectra of the turbulence, reference is made to Press and Houbolt,[7] Kahn,[8] and Panofsky and Brier.[9] It is sufficient here to mention only that the digital method uses the auto-correlation and cross-correlation functions, which can be formed from the original time series. The spectra are obtained by applying the Foureir cosine transform to the correlation functions. The scheme usually followed in this procedure is developed by Tukey.[10]

The analog method applies the Fourier transform immediately to

*Dr. Businger's present affiliation: University of Washington, Seattle, Washington

the time series, that is, when $f_1(t)$ and $f_2(t)$ are two simultaneous time series, then

$$F_1(\omega) = \int_0^T f_1(t)\, e^{-i\omega t}\, dt \tag{1}$$

$$F_2(\omega) = \int_0^T f_2(t)\, e^{-i\omega t}\, dt \tag{2}$$

where T is the period of observation. The complex spectrum is then

$$\Phi_{12}(\omega) + iQ_{12}(\omega) = \frac{1}{2\pi T} F_1(\omega)\hat{F}_2(\omega) \tag{3}$$

where the circumflex denotes complex conjugate. The real part of the spectrum is known as the cospectrum and the imaginary part is known as the quadrature spectrum. To determine the complete complex cross-spectrum, both the cospectrum and quadrature spectrum have to be obtained. When the time series $f_1(t)$ and $f_2(t)$ are identical, there is only the real part of the spectrum which, in this case, is called the variance spectrum.

14.3.3 Description of the Analog Data Reduction

As described in Section 14.1.4, the observation technique provides the sonic anemometer data on film. Sections of the film containing observation periods of about 30 minutes were made into belts. These belts were used for the data reduction. (The data reduction apparatus is illustrated in Figs. 14.21, 14.22, 14.23a and 14.23b.) The reduction procedure to be followed depends on what is wanted from the available information. Having initially two different but related time series, $f_1(t)$ and $f_2(t)$, it is of interest to derive the variance spectra $\Phi_{11}(\omega)$ and $\Phi_{22}(\omega)$, the cospectrum $\Phi_{12}(\omega)$, and the quadrature spectrum $Q_{12}(\omega)$ of these time series. Furthermore, it is of interest to obtain the total variances $\overline{f_1^2}$ and $\overline{f_2^2}$ and the covariance $\overline{f_1 f_2}$. The covariance indicates the correlation between the time series. Finally, it is possible to give the cross-correlation function $R_{12}(\tau)$ between f_1 and f_2 :

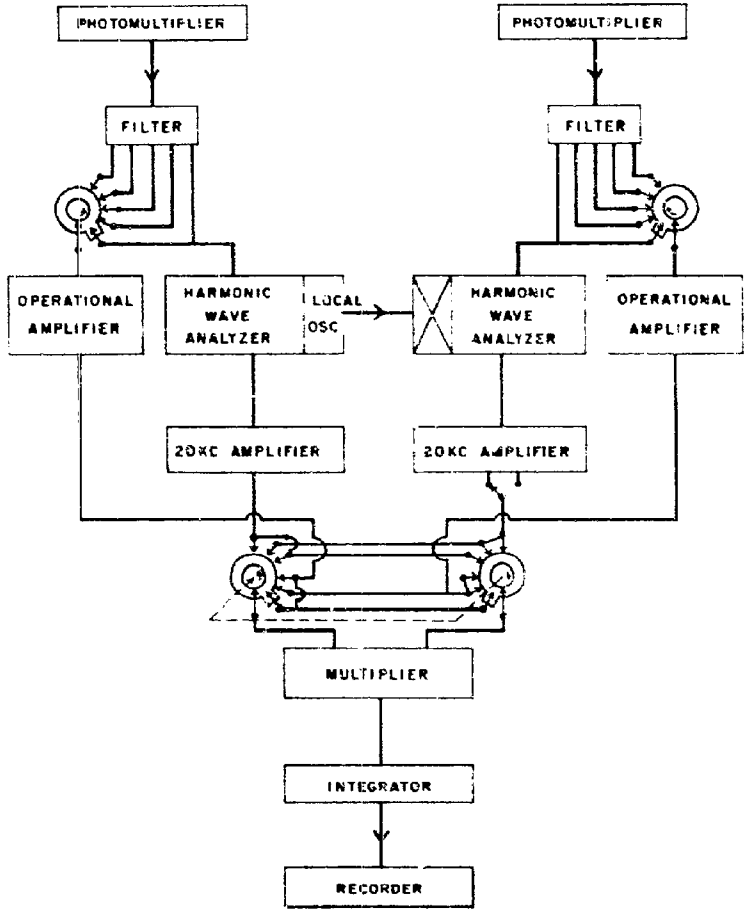

Fig. 14.21 Block diagram of data reduction technique



Fig. 14.22 The electronic data reduction apparatus

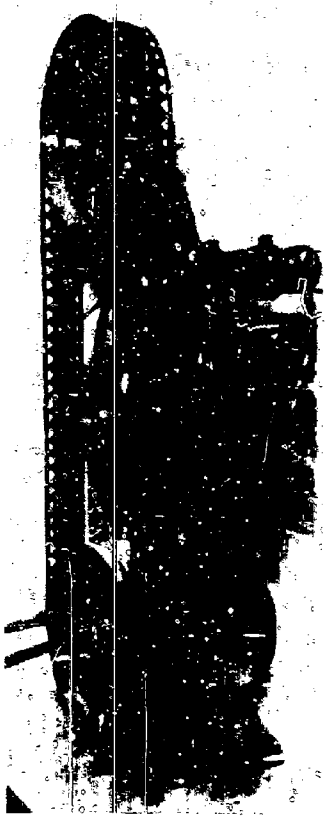

Fig. 14.23a The film reader

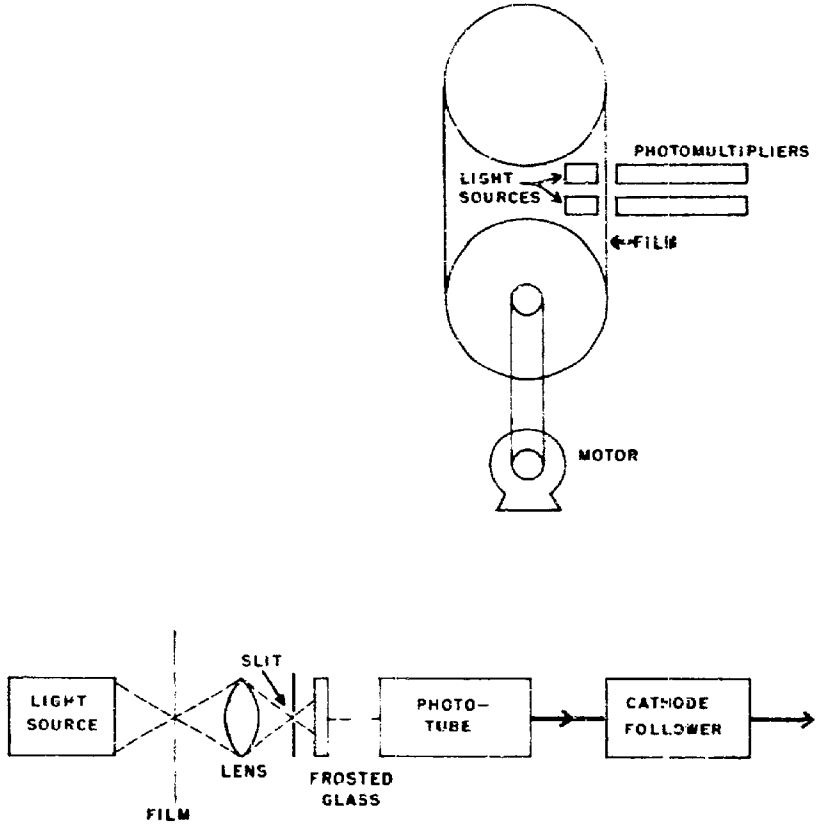

Fig. 14.23b Block diagram of the film reader

$$R_{12}(\tau) = \frac{1}{T}\int_0^T f_1(t)\, f_2(t+\tau)\, d\tau \qquad (4)$$

The cross correlation function is related to the cross-spectra by simple Fourier cosine transforms.

In the following paragraphs, various procedures of data reduction with the electronic equipment are described.

14.3.3.1 The Film Reader

Before data reduction takes place, it is necessary to transform the information available on the film belts into electrical currents. This is performed by the film reader. Two film belts containing simultaneous data are taped together so that the splices pass the photomultipliers at exactly the same time. This can be achieved by moving one of the photomultipliers in the correct position. By means of a homogenous illuminated background, the photomultipliers (which are looking through a slit focused on the film) transform the data on the moving belts into electrical signals. (A constant play-back speed of the film was applied; time multiplication was 7140 times when the original observation speed of the film was three inches per minute.) The time series of the wind and temperature data are now available as the voltage output of the photomultiplier. The film reader is illustrated in Figs. 14.23a and 14.23b.

14.3.3.2 Procedure to obtain Variance Spectra

To obtain the variance spectrum of, for example f_1, the signal from the photomultiplier passes first through a filter to eliminate the dc component and then enters a harmonic wave analyzer. This analyzer has a sharp filter which selects the contribution of the original signal to the specific frequency at which it is tuned. (See Fig. 14.24.) In other words it determines the Fourier coefficient at that frequency. By squaring the output of the wave analyzer with an analog multiplier, the variance at the considered frequency is obtained. The output of the multiplier is the input of an integrator which determines the average value of the variance over a time interval, long in comparison with the play-back time of the

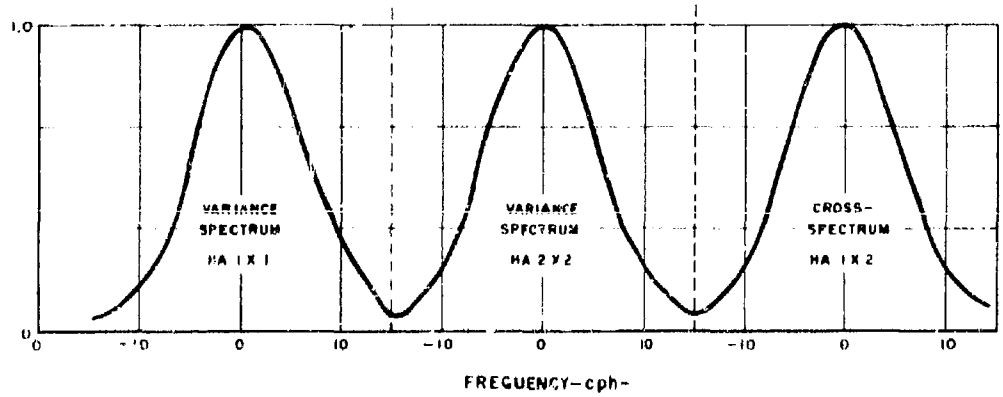

Fig. 14.24 Filter shapes of the harmonic wave analyzers

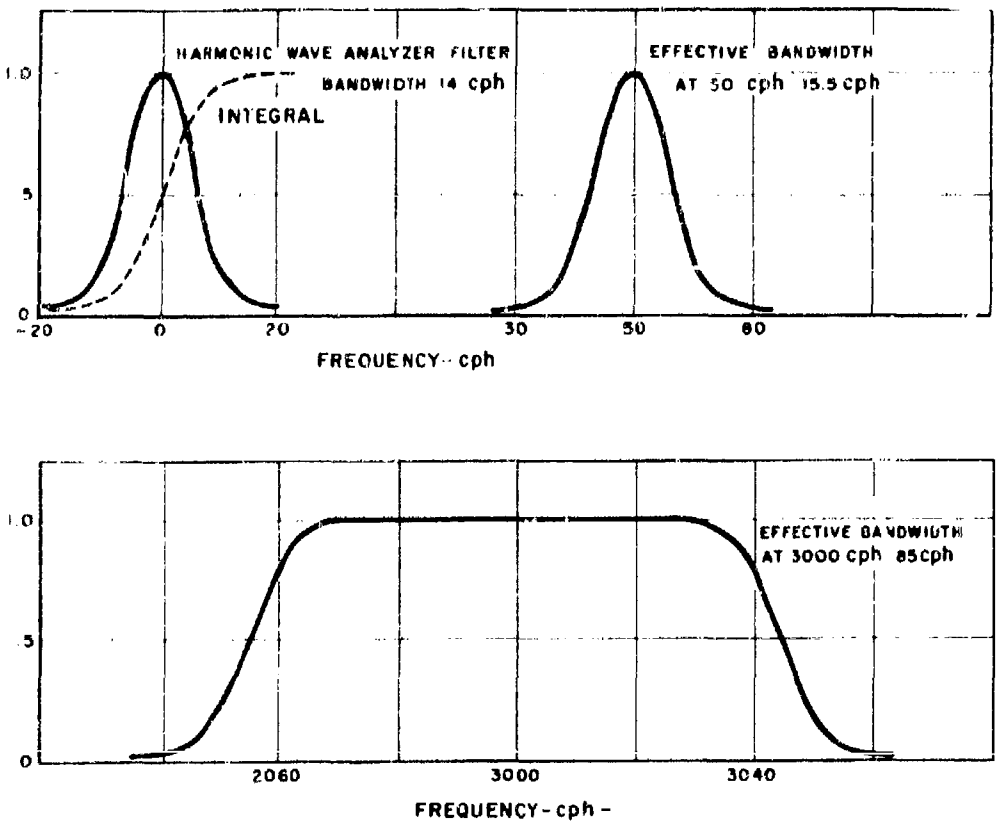

Fig. 14.25 Effective filter shapes at beginning and end of frequency range

film belt. The output of the integrator is recorded. The value of the integral at the end of the integration period represents the variance spectrum estimate. The complete spectrum is obtained by slowly scanning the entire frequency range of interest with the filter of the harmonic wave analyzer. The variance spectrum appears, then, on the recorder in steps according to the applied integration time. During each integration sequence the harmonic wave analyzer scans a frequency interval, so the estimate on the recorder corresponds to the average variance of that frequency interval. The equivalent filter bandwidths at the beginning and at the end of the frequency range are represented in Fig. 14.25.

The variance spectrum of the second time series, f_2, is obtained in almost the same way. The only difference is that a different photomultiplier and a different wave analyzer are used. The filter shapes used for the two harmonic wave analyzers are slightly different (see Section 14.3.5.4, page 40).

14.3.3.3 Procedure to obtain Cross-Spectra

For the cross-spectra, the signals f_1 and f_2 are used simultaneously. Signal f_2 is the input of harmonic wave analyzer 2. The output of the wave analyzers is the input of the multiplier, and the output of the multiplier is the covariance estimate at the frequency band at which the wave analyzers are tuned. To have the correct phase relations in the outputs of the wave analyzers, it is necessary to operate both analyzers with the same oscillator. This is achieved by disconnecting one of the oscillators and connecting the other to both circuits. The scanning of the frequency range is then performed simultaneously for both wave analyzers by the connected tuning circuit. From the multiplier on, the procedure is the same as for the variance spectra (see Section 14.3.3.2).

To obtain both the cospectrum and the quadrature spectrum, the output of the wave analyzers must either be in phase or 90 degrees out of phase.

14.3.3.4 Procedure to obtain Total Variance, Total Covariance, and Cross-Correlation Function

The total variance of f_1 is obtained simply by putting this signal

directly into the input of the multiplier. The block diagram (Fig. 14.21) shows an operational amplifier before the multiplier. This amplifier unit is merely added to have enough gain when necessary.

The total covariance is obtained by multiplying f_1 with f_2 in the multiplier. From the multiplier on, the procedure is again the same as for the variance spectra.

In all the described procedures, it is assumed that f_1 and f_2 are played back simultaneously without a shift in time (as is mentioned in Section 14.3.3.1). By moving now the adjustable photomultiplier with a constant slow speed out of the zero position, estimates are obtained of the cross-correlation function.

14.3.3.5 Filters for Estimation of Variance at the Low Frequency End of the Spectrum

Special high-pass filters were built to determine the amount of variance of the signals in the range below that where the harmonic wave analyzer is operated. The total variance is related to the spectrum by the equation:

$$\overline{f_1^2(0)} = \int_0^{\infty} \Phi_{11}(\omega)\, d\omega \qquad (5)$$

By changing the lower limit of the integral from zero to, for example, ω_1 by means of a filter which cuts out all the variance below ω_1, the total variance will be reduced by an amount:

$$\overline{f_1^2(0)} - \overline{f_1^2(\omega_1)} = \int_0^{\omega_1} \Phi_{11}(\omega)\, d\omega \qquad (6)$$

This means that the difference between the two variances is the average variance spectrum estimate over the range from zero to ω_1. Actually, the whole variance spectrum could be derived with a series of filters having a successively increasing cut-off frequency. In our case, four filters were used to limit the spectrum at 35, 70, 140, and 350 cycles per hour, respectively. (The filter shapes are given in Fig. 14.26.) With these filters it is possible to obtain a few variance spectrum estimates independent

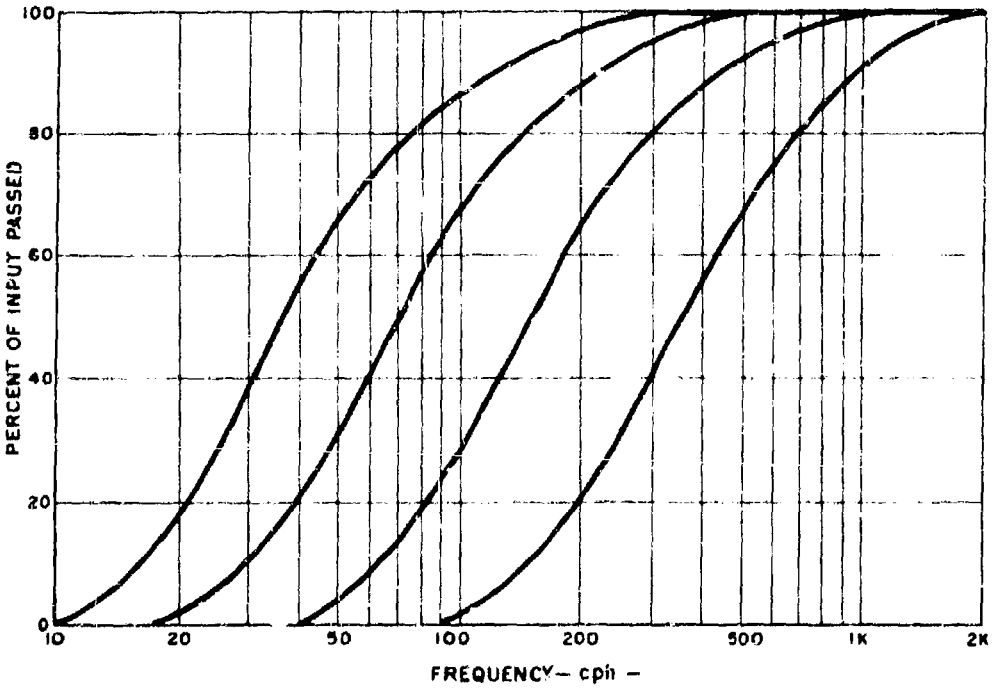

Fig. 14.26 Filter shapes of the harmonic wave analyzers

of the harmonic wave analyzer and therefore a check of the procedures.

14.3.4 The Calibration

Because the analog computer works with a signal on a relative basis, all the operations must be performed on a well-known signal for comparison. For this purpose, a film belt with a sine wave was developed. The amplitude of the wave is measured accurately and is compared with the time scale on the film belts obtained with the sonic anemometer (see Section 14.1.4). Knowing the amplitude of the sine wave in m/sec or °C/sec, the total variance or the rms value can easily be computed. The total variance of a sine wave occurs at one frequency; therefore, the variance spectrum of the sine wave is a peak at that frequency. Thus when the harmonic wave analyzers are tuned to the frequency of the sine wave, they give the total variance exactly as obtained

when squaring the sine wave directly. In equation form:

$$\int_{\omega - d\omega}^{\omega + d\omega} \Phi_{11}(\omega)\, d\omega = \frac{1}{T} \int_{0}^{T} f_1^2\, dt = \overline{f_1^2} \qquad (7)$$

when f_1 represents the sine wave and Φ_{11} its variance spectrum.

Using copies of the same sine wave for both signals, it is possible to obtain the calibration for all possible estimates on the chart of the recorder.

14.3.5 Technical Details of the Equipment

14.3.5.1 Light Source

The light source was a 12-volt dc fluorescent bulb operated by 24-volt batteries. A ballast tube was used to maintain a constant current. The surface of the light source was fairly uniformly illuminated. However, the intensity of the light was not always constant and introduced some problems.

14.3.5.2 Photomultiplier Unit

Type 6199 photomultiplier was used for transforming the fluctuating light intensity, obtained by the signal on the film, into a fluctuating voltage. A slit was placed in front of the photomultiplier. This slit was projected on the film with a movie camera lens (Kodak f1.9, 25 mm). A cathode follower was used in the circuit of the photomultiplier as a preamplifier. The tube, being very sensitive to magnetic fields, was shielded with high-mu plates.

14.3.5.3 High-Pass Filters

The high-pass filters were simple double-T filters with a cathode follower at the input and output (see Fig. 14.27).* The filter characteristics were measured with an oscillator tuned at various frequencies. (This is given in Fig. 14.26.) The oscillator replaced the photomultipliers, and the signal of the oscillator followed the procedure for obtaining

* In schematic circuit diagrams all resistors are 1/2-watt, 10 percent, unless otherwise specified. K is kilohms; M is megohms. All capacitors in decimals are in microfarads; whole numbers are micromicrofarads.

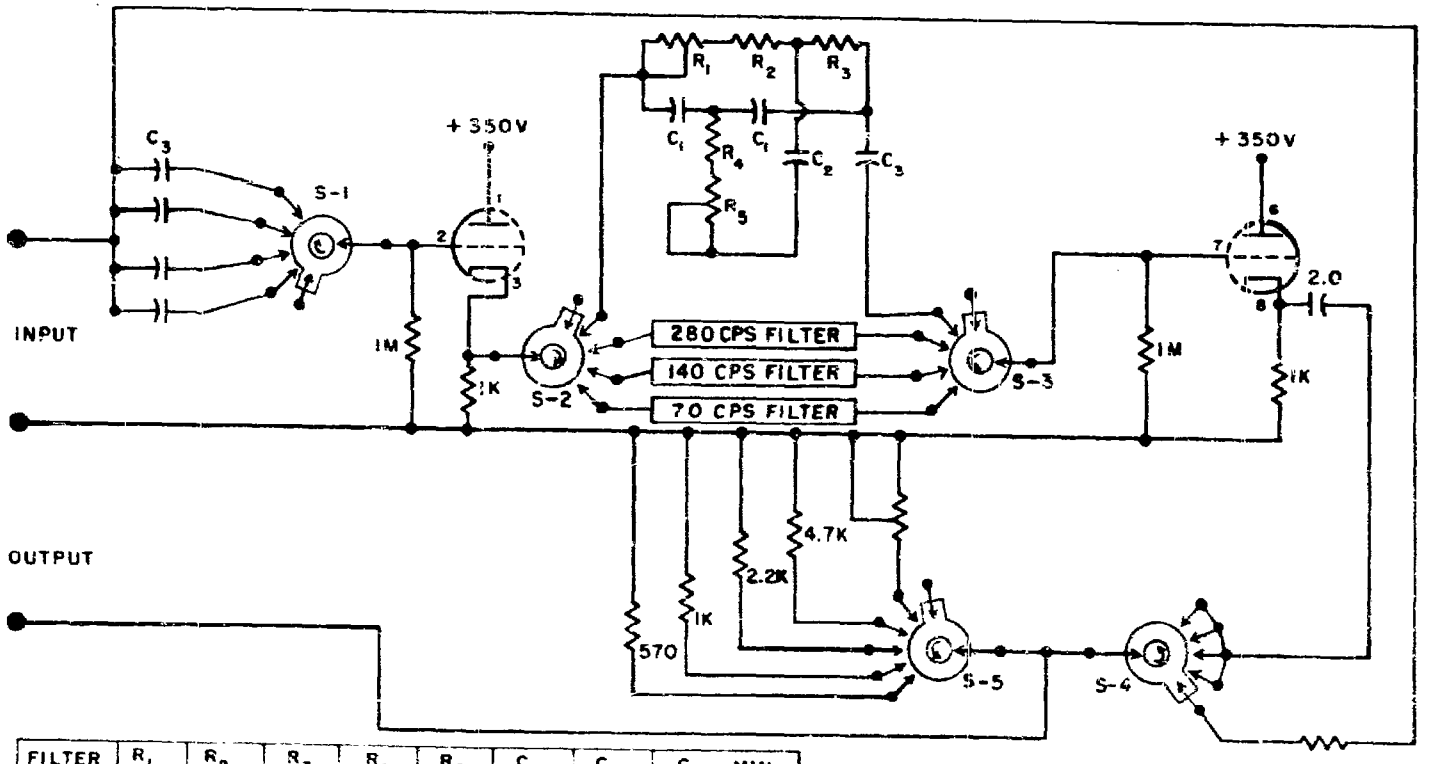

FILTER	R_1	R_2	R_3	R_4	R_5	C_1	C_2	C_3 MIN
70 CPS	5K	22K	18K	5K	10K	1.0	2.0	0.016 8.75
140CPS	5K	22K	18K	5K	10K	0.5	1.0	8000 17.5
280CPS	2.5K	6.8K	9K	0	5K	0.5	1.0	4000 35
700CPS	2.5K	6.8K	9K	0	5K	0.25	0.5	2000 70

Fig. 14.27 High-pass filters, schematic circuit diagram

the total variance. The filter shape, therefore, appeared directly on the recorder chart.

14.3.5.4 Harmonic Wave Analyzers

The wave analyzers used were manufactured by Hewlett Packard Company; and the use and limitations of this instrument are described by Staake.[11] The two instruments were ordered simultaneously with the request that the filters be matched as closely as possible in both shape and phase characteristics. Fig. 14.24, page 34, illustrates the shape of the filters as applied for obtaining the spectra. These filters were measured with an oscillator in a way similar to that used for the high-pass filters. Of special interest is that the effective filter for the cospectrum is very nearly the same as the average of the two individual filters of the wave analyzers. Because the signal of the oscillator is perfectly in phase with itself, the effective filter for the quadrature spectrum should be zero. This is indeed essentially the case.

The diagram for the amplifiers and phase shifters added to the wave analyzers is given in Fig. 14.28.

14.3.5.5 The Remaining Units

The operational amplifiers, multiplier, and integrators were all standard Philbrick units. The recorder was a Varian recorder operating on 9 millivolts full scale.

14.3.6 Tests

In the previous sections, several tests of details were mentioned. In addition to these tests, it also was felt necessary to test the performance of the equipment as a whole. Therefore two prints of the same film strip were made and lined up in belts as accurately as possible with the photomultipliers. Next, the complete sequence of spectra was obtained from these two belts. Because the signals are identical, the requirements were that the variance spectra of signals 1 and 2 and the cospectrum be identical and the quadrature spectrum be zero. This checked out well within the limits of accuracy imposed on the equipment. The complete run and the original signal are displayed in Fig. 14.29 as an example.

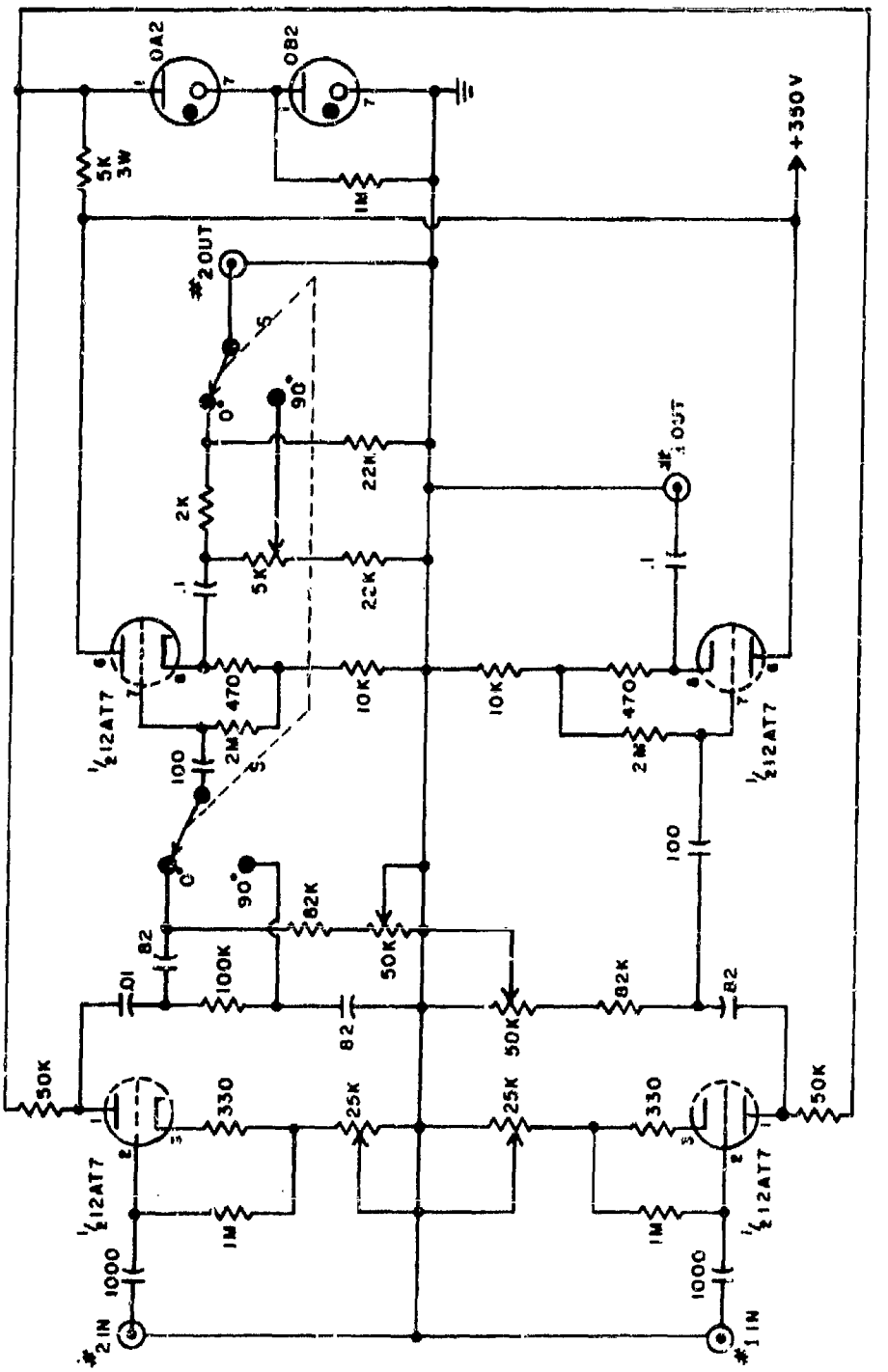

Fig. 14.28 20-kc amplifiers and phase shifters, schematic circuit diagram

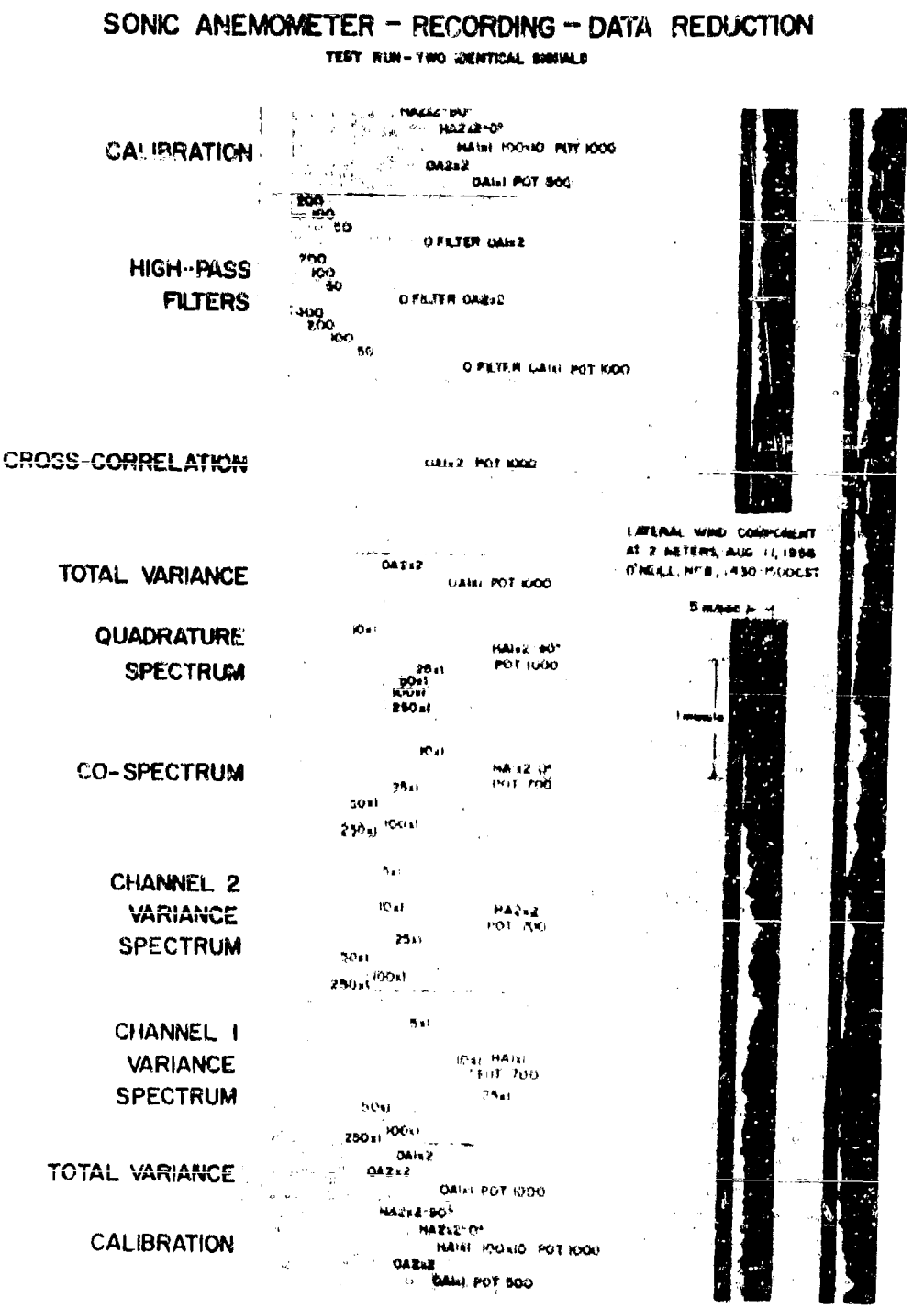

Fig. 14.29 Display of data reduction results

14.3.7 Accuracy

Most of the errors inherent in the analog method are discussed in Reference 6. However, because of the additions to the equipment for obtaining the cross-spectra, it seems worthwhile to give a complete summary of all the errors.

There are two types of errors which have to be considered. One has a statistical character and comes from finite sampling of observations; the other is introduced by the data reduction technique.

The statistical error is quite small in the estimates of the total variance. It depends somewhat on the shape of the spectrum. When there is much variance at the low-frequency end of the spectrum, the total variance may show a sampling error of some size. By filtering out this part of the spectra, the rest of the total variance may be determined with good accuracy (within 10 percent).

The single variance spectrum estimates obtained with the harmonic wave analyzer have a considerably larger statistical error. In this case it is necessary to consider the filter shape (Fig. 14.24, page 34) and the scanning speed of the wave analyzers. The effective filter bandwidth is the combination of the initial filter of the wave analyzer and the scanned frequency interval. The filter shapes at the beginning and end of the frequency range are given in Fig. 14.25. From this effective filter bandwidth, it is possible to estimate the number of degrees of freedom and, consequently, the mean deviation of the variance spectrum estimates.[10,12] These relations are represented in Fig. 14.30. Fortunately the applied filters for both the variance spectra and the cross-spectra are so closely the same that the statistical error is practically the same for all the spectra.

In relation to the effective filter bandwidth, it is important to consider both the speed of scanning and the speed of play-back of the original data. The play-back speed was 7140 times (see Section 14.3.3.1), so the entire record of 30-minute length was played back about four times per second. The fastest scanning was at the high-frequency end of the

spectrum and amounted to about 90 cycles per hour per integration period of 6 seconds. The effective filter bandwidth of the harmonic wave analyzers was about 14 cycles per hour (see Fig. 14.24), so it took about $\frac{14}{90} \times 6 =$ 0.93 seconds for the filter to pass one fixed point of the spectrum. In that time all the available information had passed almost four times; therefore the filter had sufficient opportunity to determine the mean Fourier coefficient for each frequency.

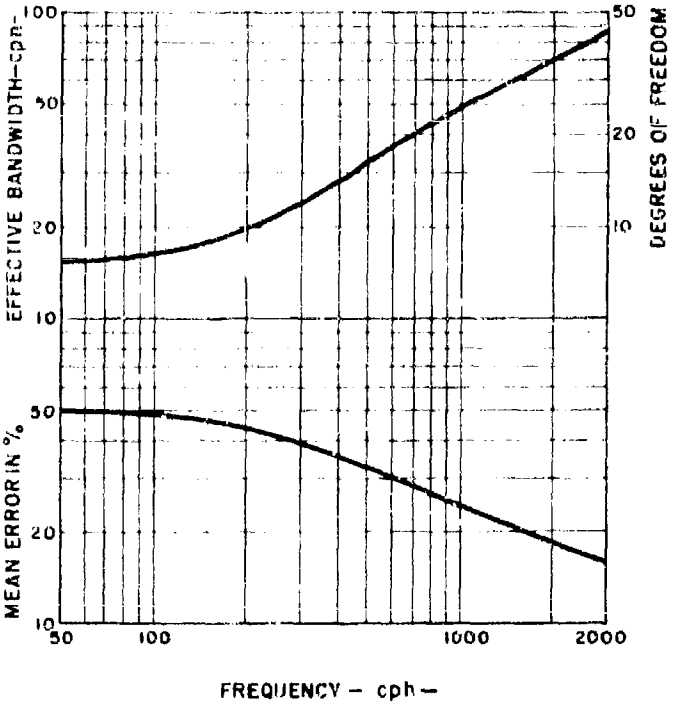

Fig. 14.30 Degrees of freedom and accuracy of the spectrum estimates as a function of frequency

The errors introduced by the data reduction technique are manifold. However, most of them are so small in comparison to the statistical errors that they can be neglected. There are a number of systematic errors and random errors. The systematic errors are introduced by:

a. The nonuniformity of the light source

b. The nonuniformity of the slit and of the sensitivity of the photomultiplier

c. Nonlinearity in the analog amplifiers and the analog multiplier

These errors are comparatively small and can be estimated to be less than five percent together.

The random errors are introduced by:

a. The splice of the film

b. Variable contrast on the film

c. Fluctuations of the light source

d. Drift in the analog multiplier

These errors could be checked with frequent calibrations with the sine wave film. It was possible to reproduce the same estimate with an error less than five percent.

A special error was introduced in the estimates of the cross-spectra. The two film strips containing observations could be matched with each other within about 0.5 mm or less than 0.5 seconds of the time scale. This introduced fluctuations in the phase relations between the two series of observations; 0.5 seconds time shift means a 90° phase shift for a period of 2 seconds, which corresponds to a frequency of 1800 cph per hour. The estimates of the cross-spectra are therefore meaningless beyond that frequency. Only the coherence can be estimated with some accuracy.

Except for the cross-spectrum estimates at high frequencies, the errors introduced by the analog data reduction technique are less than the statistical errors.

14.3.8 Suggested Improvements of the Data Reduction Technique

Better accuracy of the cross-spectra for high frequencies may be obtained by modifying the observation technique so that the two simultaneous signals are recorded on one film with fixed displacement. The photomultipliers, once adjusted correctly to the fixed displacement, will



read accurately the same time on both signals and this will improve the accuracy of the cross-spectra.

The constancy of the light sources has to be improved. However, it is possible to correct for small fluctuations in the light intensity by measuring it with accurate photocells. The photocell reading may replace the sine wave calibration procedure after calibration with the sine wave. This will save time during the reduction.

The photomultiplier units are only accurately adjustable in the vertical, that is, in the respective time scale of the film. Horizontal adjustments, which are necessary for the photomultipliers to read the films in the correct position with respect to the amplitude of the signal, can be made only in a crude manner. The possibility of fine adjustment in the horizontal will improve the handling of data.

Complete data reduction of two simultaneous signals can be made twice as fast by making two separate channels for each signal all the way through the recorder. (See Fig. 14.31.) Very little additional equipment is required. Comparison of Fig. 14.31 with Fig. 14.21, page 31, shows that a 20-kcps squaring amplifier, a 20-kcps multiplier, an integrator, and a recorder are added to the equipment. From these units, the 20-kcps amplifier and the integrator are already available; therefor only the 20-kcps multiplier and the recorder need to be acquired. As can be seen from Fig. 14.31, the variance spectra will be obtained on recorder 1 and the cross-spectra, total variance, covariance, and eventually the cross-correlation function will be obtained on recorder 2.

14.3.9 Tabulation of the Data

Of the original observations obtained with the sonic anemometer at O'Neill, Nebraska in 1956, only a few were good. The temperature observations especially were often unrealistic; apparently, the sonic thermometer introduced sometimes large unknown errors. (Fig. 14.32 is a layout of the location of sonic anemometry during experiments.)

The data which appeared to be most consistent, and therefore very likely to be close to the truth, were reduced and tabulated. These data

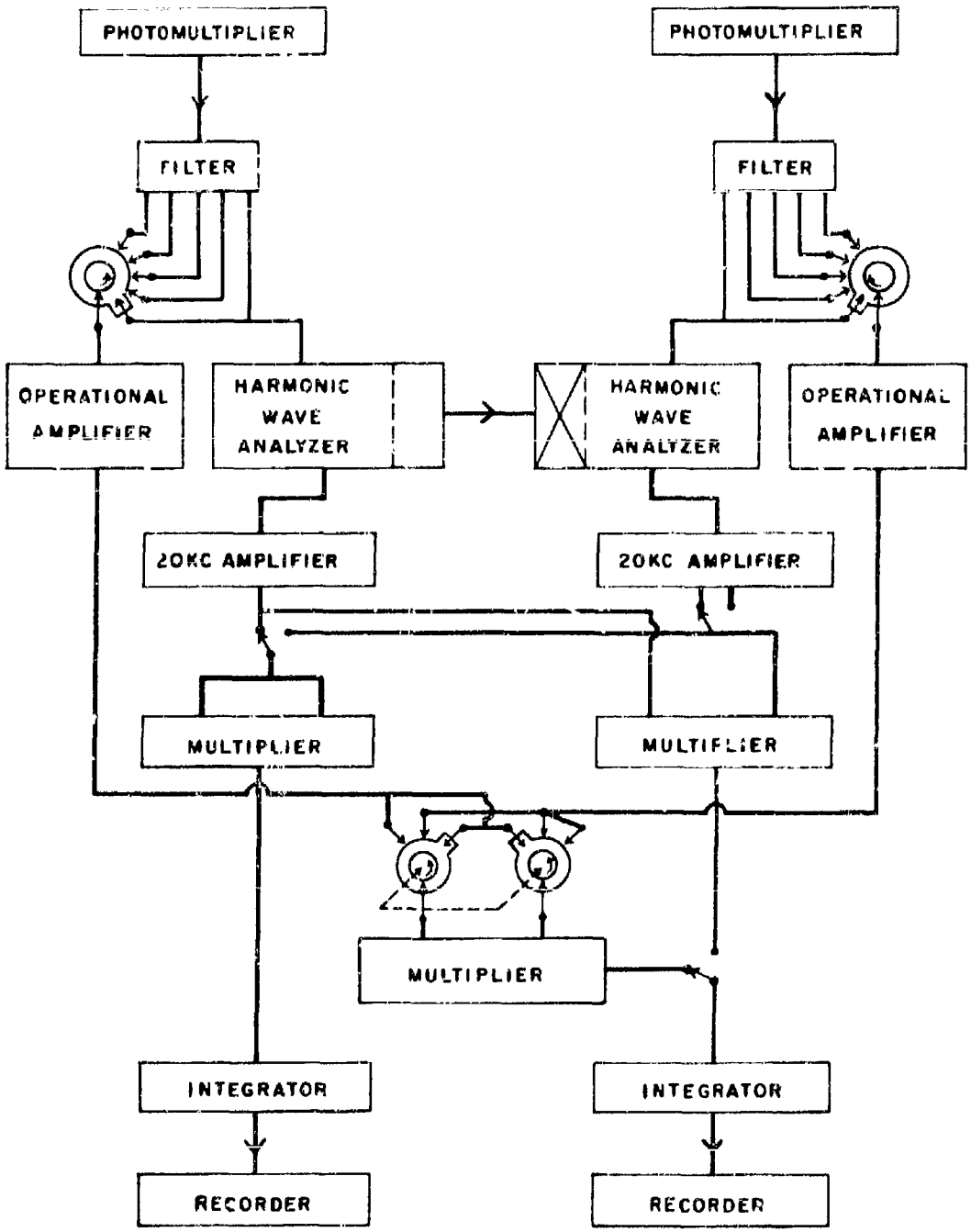

Fig. 14.31 Block diagram of optimized data reduction system

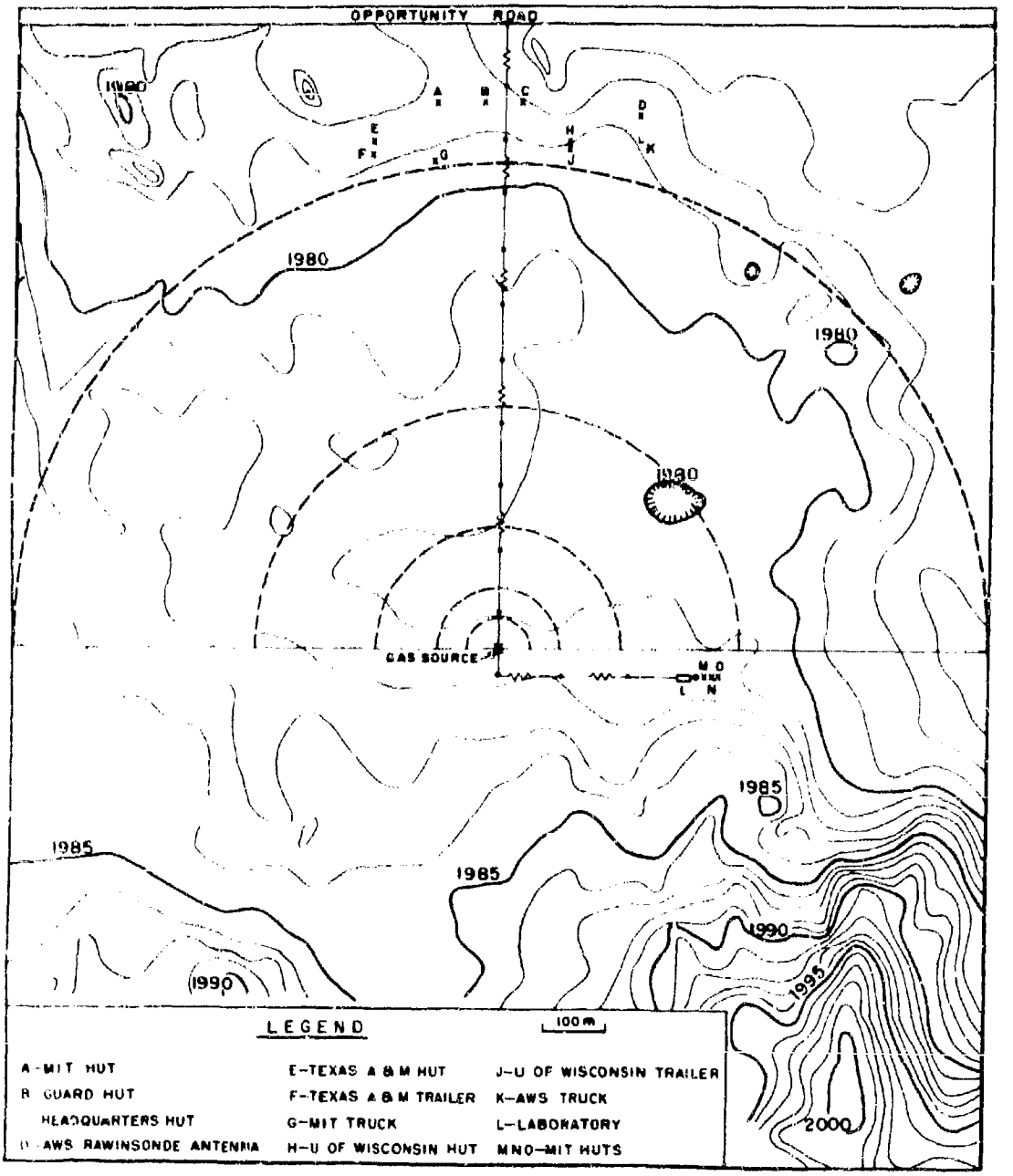

Fig. 14.32 Topography of field site and equipment locations for Project Prairie Grass

are the lateral wind component at 2, 8, and 16 meters observed 11 August, and the vertical wind component and temperature at 2 meters observed 13 August.

Table 14.1 gives the total variances and covariances of the observed parameter at various cut-off frequencies of the high-pass filters. The last two columns of the table are obtained from heat budget observations which were taken simultaneously with the sonic anemometer observations.

Table 14.2 is self-explanatory. It is interesting to note that the wind at 2 meters lags behind the wind at the 8- and 16-meter levels. To a lesser extent, the vertical wind component lags behind the temperature.

In Table 14.3, the variance and cross-spectra are given for the observations summarized in Table 14.1. The first column gives the average frequency to which the spectrum estimates correspond. The second and third (and sometimes the fourth) columns give the variance spectraof the simultaneous observations made during that run. The remaining columns give the cross-spectra. The variance spectra are characterized by 1x1, 2x2, and 3x3 as headings which indicate the combination of observations correlated; the cospectra are characterized by 1x2, 1x3, and 2x3. The quadrature spectra are characterized by 1x(2-90°), etc., indicating the combination of observations correlated and the applied phase shift. For example: When v at 2 m is indicated by 1, and v at 8 m by 2, then a positive estimate of the quadrature spectrum indicated by 1x(2-90°) means that for the considered frequency the wind at 2 m lags behind the wind at 8 m.

14.3.9.1 Remarks

In Table 14.1, the total variance of v at 8 m appears to be consistently smaller than the variance at 2 m by about a factor of two, except during the night run where v at 2, 8, and 16 m are of the same order of magnitude. There is only one 16-m run at daytime which shows the same order of variance as the 2-m run. There is reason, therefore, to suspect the calibration of the 8-m run throughout the day. The spectra

at all three levels show great similarity. The correlation between the nighttime observations were too small to be recorded with any accuracy.

There is only one simultaneous observation of vertical wind component and temperature at the same height. The analysis shows that there is reasonable agreement between the L obtained by heat budget computations and by the sonic anemometer. The value of 0.49 ly/min has to be reduced by 3 percent according to the Bowen ratio correction (see Eq. |12| in Section 14.1.3).

The quadrature spectrum estimates at the 11 August 2220-2250 CST observations were negligible, so these spectra are omitted.

TABLE 14.1 Sonic Anemometer Observations at O'Neill, Nebraska, 1956

Date Time	Parameter	Height in m	Units	Variance for High Pass Filters 35cph	70cph	140cph	350cph	Heat Budget Observations Sensible Heat L in ly/min	Evaporation E ly/min
11 August 1416-1446	$\overline{v_1^2}$	2	cm^2/sec^2	3060.0	1900.0	990.0	470.0	-0.130	-0.170
	$\overline{v_2^2}$	8	"	1530.	980.	500.	300.		
	$\overline{v_1 v_2}$		"	1000.	520.	170.	17.		
1520-1550	$\overline{v_1^2}$	2	"	2550.	1480.	900.	410.		
	$\overline{v_2^2}$	8	"	1200.	730.	440.	200.		
	$\overline{v_1 v_2}$		"	750.	240.	20.	0.		
1602-1632	$\overline{v_1^2}$	2	"	1800.	1150.	660.	380.		
	$\overline{v_2^2}$	8	"	960.	670.	410.	220.		
	$\overline{v_1 v_2}$		"	540.	200.	28.	15.		
	$\overline{v_3^2}$	16	"	1640.	1200.	700.	460.		
	$\overline{v_1 v_3}$		"	300.	30.	0.	0.		
1636-1706	$\overline{v_1^2}$	2	"	2230.	1400.	710.	300.		
	$\overline{v_2^2}$	8	"	1130.	820.	490.	250.		
	$\overline{v_1 v_2}$		"	570.	230.	15.	0.		
2220-2250	$\overline{v_1^2}$	2	"	200.	190.	170.	140.	+0.018	+0.012
	$\overline{v_2^2}$	8	"	280.	260.	240.	220.		
	$\overline{v_3^2}$	16	"	270.0	260.0	250.0	220.0		
13 August 1227-1257	$\overline{w^2}$	2	"	3550.0	2600.0	1800.0	1000.0	-0.420	-0.250
	$\overline{t^2}$	2	$°C^2$	0.80	0.52	0.305	0.15		
	$C_p \overline{w t}$	2	ly/min	0.49	0.27	0.130	0.03		

TABLE 14.2 Cross-correlation functions, $R_{12} = \frac{1}{T}\int_0^T f_1(t)\, f_2(t+\tau)\, d\tau$

τ in sec	Date: Time: f_1 f_2 units	Aug 11 1416-1446 v at 8 m v at 2 m cm^2/sec^2	Aug 11 1520-1550 v at 8m v at 2 m cm^2/sec^2	Aug 11 1602-1632 v at 8m v at 2m cm^2/sec^2	Aug 11 1636-1706 v at 8m v at 2m cm^2/sec^2	Aug 11 1636-1706 v at 2m v at 16 m cm^2/sec^2	Aug 13 1227-1257 w at 2m t at 2m $cm°C/sec$
-30				-14.6			
			-44.0	41.0		340.0	
-27		-42.0	0.	73.		360.	
		0.	65.	145.		400.	
-24		42.	120.	220.	-31.0	380.	
		139.	130.	320.	-15.	460.	
-21		180.	153.	390.	31.	480.	
		250.	230.	470.	77.	480.	-.067
-18		390.	280.	520.	123.	500.	-.060
		490.	350.	630.	215.	520.	-.040
-15		610.	435.	685.	310.	550.	-.020
		750.	520.	740.	400.	550.	.000
-12		880.	610.	800.	540.	570.	.034
		905.	700.	860.	630.	610.	.074
-9		1000.	785.	930.	720.	590.	.140
		1180.	830.	990.	800.	570.	.20
-6		1225.	860.	990.	880.	570.	.28
		1225.	870.	860.	890.	500.	.33
-3		1225.	850.	740.	785.	440.	.38
		1180.	785.	690.	630.	380.	.40
0		1100.	750.	540.	570.	320.	.49
		1010.	740.	480.	480.	300.	.40
3		890.	700.	390.	430.	270.	.35
		680.	620.	290.	310.	220.	.26
6		600.	440.	220.	200.	180.	.23
		470.	350.	160.	123.	160.	.18
9		390.	330.	100.	140.	140.	.155
		290.	305.	100.	123.	80.	.122
12		139.	260.	87.	62.	50.	.081
		14.	196.	44.	0.	20.	.027
15		-167.	153.0	36.	-15.	0.	.020
		-250.		-29.	-62.	-20.	.007
18		-330.		-88.	-62.	-50.	-.027
		-380.		-95.	-123.	-50.	-.027
21		-420.		-117.0	-123.	-100.	-.040
		-445.			-140.0	-130.	-.054
24		-460.				-150.	-.054
		-470.				-160.0	-.067
27		-470.					-.074
		-470.					
30		-445.0					

TABLE 14.3 Variance and cross-spectra obtained from sonic anemometer-thermometer, O'Neill, Nebraska, 1956. The units are $cm^2/sec^2/cph$ for the wind spectra, $°C^2/cph$ for the temperature spectra, cm °C/sec/cph for the wind-temperature cross-spectra.

TABLE 14.3.

1416-1446 CST, 11 August 1956

Parameter:	v	v	
Height (m):	2	8	
Channel:	1x1	2x2	1x2
Average (cph) Frequency			
54	77.4	25.6	37.6
66	31.0	12.2	19.6
79	58.2	5.80	6.02
93	19.3	5.75	5.64
108	29.1	7.25	10.0
124	11.5	4.20	4.86
142	8.72	2.14	.363
162	2.63	1.49	.542
184	3.40	1.12	.135
208	2.48	.924	.015
235	3.45	.790	.392
265	2.17	.303	.248
296	1.46	.840	.045
335	1.16	.582	.004
376	.970	.536	.075
421	1.26	.303	- .083
470	.853	.235	- .039
523	.891	.328	- .013
580	.426	.224	- .026
641	.310	.263	+ .049
706	.348	.146	- .036
775	.232	.143	- .049
848	.330	.119	- .088
926	.263	.105	- .021
1009	.175	.151	+ .019
1097	.310	.070	+ .094
1190	.116	.047	.006
1288	.108	.065	.010
1391	.085	.053	- .019
1498	.097	.057	- .010
1607	.097	.042	+ .008
1724	.073	.048	- .009
1842	.069	.034	- .007
1963	.043	.044	
2087	.077	.023	
2214	.038	.023	
2344	.031	.019	
2476	.028	.013	
2610	.019	.015	
2746	.017	.011	
2884	.019	.009	
3024	.013	.017	

TABLE 14.3 (Cont'd)

1520-1550 CST, 11 August 1956

Parameter:	v	v		
Height (m)	8	2		
Channel:	1x1	2x2	1x2	2x(1-90°)
Average (cph) Frequency				
54	19.2	42.7	21.4	+ .955
66	11.9	41.0	17.5	+3.00
79	8.44	23.2	8.34	+3.14
93	5.50	9.40	3.92	+3.24
108	4.12	10.2	3.36	+3.68
124	2.93	8.34	3.03	+3.60
142	3.58	5.26	1.46	+2.84
162	2.54	4.27	1.37	- .501
184	2.26	3.10	.390	+2.09
208	1.10	3.10	.445	+1.68
235	1.35	2.24	- .167	+ .960
265	.942	1.25	- .056	+ .174
298	.690	.966	- .389	+ .196
335	.660	.909	.097	+ .273
376	.542	1.09	- .151	- .076
421	.681	.966	- .340	+ .087
470	.408	.700	.047	- .240
523	.392	.496	- .181	+ .038
580	.377	.290	- .102	+ .060
641	.314	.325	.009	+ .174
706	.204	.360	- .006	+ .114
775	.220	.342	.006	+ .125
848	.161	.235	- .028	+ .027
926	.133	.265	- .018	- .005
1009	.102	.200	- .044	+ .003
1097	.079	.132	- .024	+ .019
1190	.088	.162	- .014	+ .017
1288	.086	.107	.001	+ .017
1391	.053	.115	.046	- .027
1498	.061	.128		- .016
1607	.061	.092		
1724	.041	.100		
1842	.035	.096		
1963	.038	.098		
2087	.025	.061		
2214	.024	.053		
2344	.020	.060		
2476	.015	.046		
2610	.013	.041		
2746	.015	.035		
2884	.010	.037		
3024	.009	.026		

TABLE 14.3 (Cont'd)

1602-1632 CST, 11 August 1956

Parameter:	v	v		
Height (m)	8	2		
Channel:	1x1	2x2	1x2	2x(1-90°)
Average (cph) Frequency				
54	15.10	18.20	19.80	-1.380
66	8.25	12.70	11.30	+ .650
79	6.20	12.70	8.50	+2.890
93	5.50	10.30	6.60	+1.700
108	3.44	7.15	3.70	+1.250
124	3.03	5.56	1.84	+ .490
142	1.65	2.46	1.38	+ .450
162	1.510	1.90	.925	+ .775
184	.990	1.97	.745	+ .550
208	.825	2.04	.450	+ .225
235	.850	1.65	.083	+ .125
265	1.320	.953	.294	- .025
298	.632	.493	.210	- .003
335	.303	.940	.021	+ .053
376	.371	.493	.272	+ .090
421	.303	.635	.073	+ .047
470	.330	.254	.068	+ .028
523	.278	.365	.105	- .006
580	.256	.334	- .021	+ .040
641	.151	.286	+ .035	+ .025
706	.220	.127	- .016	+ .009
775	.103	.171	.013	+ .008
848	.110	.151	.014	+ .025
926	.123	.179	- .008	+ .043
1009	.083	.167	.014	+ .013
1097	.083	.138	- .013	+ .002
1190	.115	.079	- .006	+ .027
1288	.069	.095	- .007	- .003
1391	.052	.064	- .005	+ .004
1498	.047	.091	- .005	+ .014
1607	.041	.064	+ .005	+ .017
1724	.023	.052	- .005	+ .009
1842	.038	.064	- .006	- .002
1963	.025	.045	+ .001	
2087	.020	.050	- .008	
2214	.019	.042	- .002	
2344	.011	.039	0.000	
2476	.011	.031	+ .001	
2610	.011	.031	- .007	
2746	.010	.032		
2984	.009	.024		
3024	.010	.023		

TABLE 14.3 (Cont'd)

1636-1706 CST, 11 August 1956

Parameter:	v	v	v				
Height:(m)	2	8	16				
Channel:	1x1	2x2	3x3	1x2	1x3	1x(2-90°)	1x(3-90°)
Average (cph) Frequency							
54	19.6	14.0	11.80	13.0	8.41	0.	+6.44
66	17.8	15.4	7.54	14.6	6.58	+1.01	+5.24
79	16.4	12.4	4.20	15.2	1.63	+ .462	+ .595
93	9.7	6.85	4.10	7.63	1.20	+ .700	0.
108	7.3	4.28	3.16	4.50	.178	+1.28	+ .953
124	4.06	3.42	5.23	2.50	- .950	+1.65	+2.14
142	4.00	2.91	2.05	.945	- .484	+1.62	+1.93
162	3.68	3.46	2.27	1.97	.727	+1.44	+1 [illegible]
184	2.79	3.28	1.18	2.22	.038	+1.06	+ .372
200	2.19	1.57	.790	1.40	- .013	+1.16	+ .327
235	1.52	1.50	.835	.450	- .137	+ .870	+ .209
265	1.32	.970	1.11	.175	- .204	+ .340	+ .379
298	1.20	1.20	1.02	.200	- .287	+ .487	- .221
335	.720	.582	1.11	.194	- .324	+ .111	+ .004
376	.658	.411	.470	.019	.090	+ .107	- .093
421	.542	.308	.760	- .106	.038	+ .059	+ .112
470	.569	.549	.750	- .100	.095	+ .089	+ .026
523	.402	.445	.825	- .091	- .191	+ .159	- .067
580	.523	.394	.570	- .115	- .130	+ .135	+ .015
641	.396	.231	.273	- .006	.070	+ .037	- .018
706	.278	.291	.278	- .016	- .019	- .011	- .019
775	.234	.214	.230	- .011	.045	+ .055	
848	.193	.175	.134	- .026	- .013	- .017	
926	.195	.152	.128	- .011	.002	- .051	
1009	.111	.115	.139	- .031	.003	+ .011	
1097	.145	.073	.096	- .008	- .127	- .002	
1190	.128	.065	.152	- .016	- .003	0.	
1288	.118	.062	.159	.003	.132		
1391	.095	.065	.114	.001	- .002		
1498	.099	.049	.070	- .006	- .004		
1607	.092	.056	.098				
1724	.071	.033	.073				
1842	.065	.037	.060				
1963	.057	.039	.080				
2087	.044	.025	.062				
2214	.036	.020	.045				
2344	.038	.019	.044				
2478	.036	.015	.038				
2610	.027	.017	.033				
2746	.030	.010	.028				
2884	.025	.011	.030				
3024	.022	.010	.030				

TABLE 14.3 (Cont'd)

2220-2250 CST, 11 August 1956

Parameter:	v	v	v			
Height (m):	2	8	16			
Channel:	1x1	2x2	3x3	1x2	1x3	2x3
Average (cph) Frequency						
54	.570	.668	.590	.190	.149	.415
66	.438	.527	.422	.139	.530	.412
79	.335	.413	.493	.177	.233	.123
93	.278	.320	.270	.126	.114	.097
108	.246	.331	.182	.069	.075	.090
124	.210	.186	.152	.048	.045	.095
142	.176	.203	.168	.082	-.012	.053
162	.217	.159	.151	.027	-.080	.018
184	.209	.122	.207	-.023	-.015	.041
208	.177	.137	.135	+.003	-.032	.050
235	.172	.190	.180	-.036	+.023	.044
265	.205	.148	.150	-.038	-.012	.023
298	.192	.150	.086	-.051	-.034	.025
335	.158	.146	.259	-.039	-.086	.001
376	.164	.206	.186	-.028	-.079	.019
421	.161	.130	.172	-.019	-.023	.004
470	.166	.095	.137	-.042	-.029	-.027
523	.152	.085	.153	-.015	-.032	+.003
580	.173	.127	.083			
641	.138	.046	.096			
708	.116	.102	.123			
775	.086	.083	.079			
848	.091	.081	.076			
926	.083	.046	.096			
1009	.085	.051	.064			
1097	.054	.053	.081			
1190	.057	.045	.063			
1288	.048	.057	.080			
1391	.041	.035	.039			
1498	.037	.032	.048			
1607	.043	.040	.034			
1724	.035	.026	.034			
1842	.029	.023	.034			
1963	.027	.019	.027			
2087	.029	.022	.027			
2214	.033	.023	.023			
2344	.019	.016	.022			
2476	.020	.016	.031			
2610	.019	.015	.020			
2746	.012	.013	.016			
2884	.013	.015	.014			
3024	.012	.012	.012			

TABLE 14.3 (Cont'd)

1227-1257 CST, 13 August 1956

Parameter:	w	T		
Height (m)	2	2		
Channel:	1x1	2x2	1x2	2x(1-90°)
Average (cph) Frequency				
54	23.8	53.8×10^{-4}	26.7×10^{-2}	1.81×10^{-2}
66	20.1	45.8	21.7	3.77
79	17.5	37.7	18.1	13.3
93	15.0	25.1	12.8	6.15
108	12.5	17.9	8.69	2.76
124	9.03	16.1	5.68	1.98
142	11.0	12.6	5.43	1.84
162	7.52	8.60	3.99	2.61
184	8.02	9.77	3.14	1.41
208	5.11	8.60	2.27	.565
235	4.81	5.10	1.87	.850
265	3.81	5.74	1.03	.708
298	2.60	6.03	.876	.600
335	3.28	3.16	- .453	.566
376	1.80	2.15	+ .543	.390
421	1.08	2.08	.423	.283
470	1.60	1.79	.166	.212
523	1.35	2.51	.482	- .008
580	.826	2.10	- .151	.071
641	.701	1.24	+ .158	.002
706	.730	1.04	+ .052	- .097
775	.602	1.04	- .068	.054
848	.463	.700	+ .156	.042
926	.463	.610	+ .212	- .049
1009	.376	.680	- .083	- .008
1097	.376	.500	+ .041	0.
1190	.276	.470	.106	- .026
1288	.288	.360	.023	+ .013
1391	.269	.310	- .014	- .039
1498	.200	.380	- .018	- .031
1607	.182	.210	+ .022	- .035
1724	.138	.280	- .019	- .011
1842	.138	.170		- .014
1963	.090	.170		.008
2087	.088	.160		
2214	.072	.180		
2344	.054	.130		
2475	.050	.120		
2610	.043	.140		
2746	.038	.100		
2884	.041	.120		

REFERENCES

1. Lettau, H.H., and B. Davidson (eds.), Exploring the Atmosphere's First Mile, Vol. 1, Pergamon Press, London, (1957).

2. Suomi, V.E., "Energy Budget Studies at the Earth's Surface and Development of the Sonic Anemometer for Spectrum Analysis," AFCRC-TR-56-274, ASTIA Doc. No. AD-117197, Contract No. AF 19 (122)-461, U. of Wisconsin, Dept. of Meteorology, (1957).

3. Barrett, E.W., and Suomi, V.E., "Preliminary Report on Temperature Measurement by Sonic Means," J. Meteor. 6, pp.273-276, (1949).

4. Blochintzev, D., "The Propagation of Sound in an Inhomogenous and Moving Medium," pp. 329-334; Part I, "Propagation of Sound in a Turbulent Medium," pp. 329-332; Part II, "Propagation of Sound Waves Through a Shock Wave," pp. 332-334, J. Acoust. Soc. Am., 18, (1946).

5. Gerhardt, J.R., C.M. Crain, and H.W. Smith, "Fluctuations of Atmospheric Temperature as a Measure of the Scale and Intensity of Turbulence Near the Earth's Surface," J. Meteor., 9, pp. 299-310, (1952).

6. Businger, J.A., and V.E. Suomi, "Variance Spectra of the Vertical Wind Component Derived from Observations of the Sonic Anemometer at O'Neill, Nebraska in 1953," Archive für Meteor., Geophys. u. Bioklim., Series A, Vol. 10, 4, pp. 415-425, (1958).

7. Press, H., and J.C. Houbolt, "Some Applications of Generalized Harmonic Analysis to Gust Loads on Airplanes," J. Aero. Sci. 22, 17-26, (1955).

8. Kahn, A.B., "A Generalization of Average Correlation Methods of Spectrum Analysis," J. Meteor., 14, 9-17, (1957).

9. Panofsky, H.A., and G.W. Brier, Some Applications of Statistics to Meteorology, Pennsylvania State University, (1958).

10. Tukey, J.W., "The Sampling Theory of Power Spectrum Estimates," Symposium on Applications of Auto-Correlation Analysis to Physical Problems, Woods Hole, Mass., Office of Naval Research, Washington, D.C., pp. 47-67, (1949).

11. Staake, D.B., "A Low Frequency Spectrum and Amplitude Distribution Analyzer," Johns Hopkins University, Applied Physics Laboratory, Rep. CM 833, (1955).

12. Spetner, L.M., "Errors in Power Spectra Due to Finite Sample," J. Appl. Phys. 25, pp. 653-659, (1954).

CHAPTER 15

FAST-RESPONSE METEOROLOGICAL INSTRUMENTATION USED TO STUDY TURBULENT STRUCTURE DURING PROJECT PRAIRIE GRASS

H. E. Cramer, F. A. Record, and H. C. Vaughan
Massachusetts Institute of Technology

15.1 Introduction

Investigations of the structure of atmospheric turbulence are principally based on selective analyses of mean square amplitudes (power spectra) and characteristic lengths (scales) of the fluctuations in wind velocity measured at fixed points. Due to the broad spectrum of eddy sizes normally present in atmospheric flow, techniques that have been successfully applied in wind-tunnel studies of turbulence[5] are only of limited use. Within the past decade, precise methods have been developed by Tukey[14] and others for the spectral analysis of random fluctuations of the type found in winds of the lower atmosphere. These techniques utilize the Fourier transforms of auto-correlation and cross-correlation functions obtained from stationary or quasi-stationary time series. Numerous investigators have determined power spectra of the velocity of the wind;[3, 11, 12, 13] however, except for preliminary studies at Round Hill,[8, 9] no measurements of the Eulerian scales of turbulence appear to be available.

The structure experiments carried out during Project Prairie Grass were designed to provide information on space and time spectra of the orthogonal components of wind velocity within the frequency band from about 0.5 to 0.01 cycles sec^{-1}. The high-frequency limit is imposed by the resolution time of the instrumentation (about 1 sec) and the low-frequency limit is dictated by the duration of the sampling interval (20 min). It was anticipated that measurements of this type would not only provide urgently needed background information on turbulent structure but would also prove useful in explaining the diffusion patterns observed during the sulfur -

dioxide tracer experiments.[1] Field instrumentation comprised five lightweight bivanes, equipped with heated-thermocouple anemometers, that were arranged either normal or parallel to the prevailing wind direction; the sensing elements were at a height of 2 m above ground level and the maximum separation distance used was about 100 m. These instruments were located at the northern edge of the Prairie Grass field site just beyond the 800-m arc of the sulfur-dioxide sampling network. Measurements of total wind speed, azimuth, and elevation angle at each of the five positions were relayed via insulated electrical cables to high-speed chart recorders and auxiliary apparatus installed in a specially-equipped instrument truck. Observations were obtained for approximately sixty experiments in which the 20-min sampling interval was centered on the mid-point of the gas release.[1] Raw data were abstracted from the chart records at intervals of 1.067 sec and placed on punched cards by automatic equipment at Iowa State College. Data for selected experiments were subsequently transformed into sequences of wind-velocity components and subjected to spectral analysis. Detailed accounts of the data-abstraction and data-processing techniques are available in Chapters 16 and 17 of this report. The purpose of this chapter is to describe the meteorological instrumentation and the experimental procedures used in the field studies of turbulent structure. (See Fig. 14.31, page 48, for the location of the field setup of the equipment.)

15.2 Description of Fast-Response Meteorological Instrumentation

Instrumentation for investigating basic properties of the fluctuations in wind velocity has been under development for several years at Round Hill in connection with empirical studies of low-level atmospheric turbulence and diffusion. Prototypes of the bivanes and heated-thermocouple anemometers used in the Prairie Grass experiments have been described previously.[2,4,8,10] A photograph of one of the field assemblies is presented in Fig. 15.1. The vane is constructed of optical lens cleaning tissue cemented to a fine wire framework. The total vane surface area is about 300 cm^2; and the weight of the tail assembly, including the thin-wall

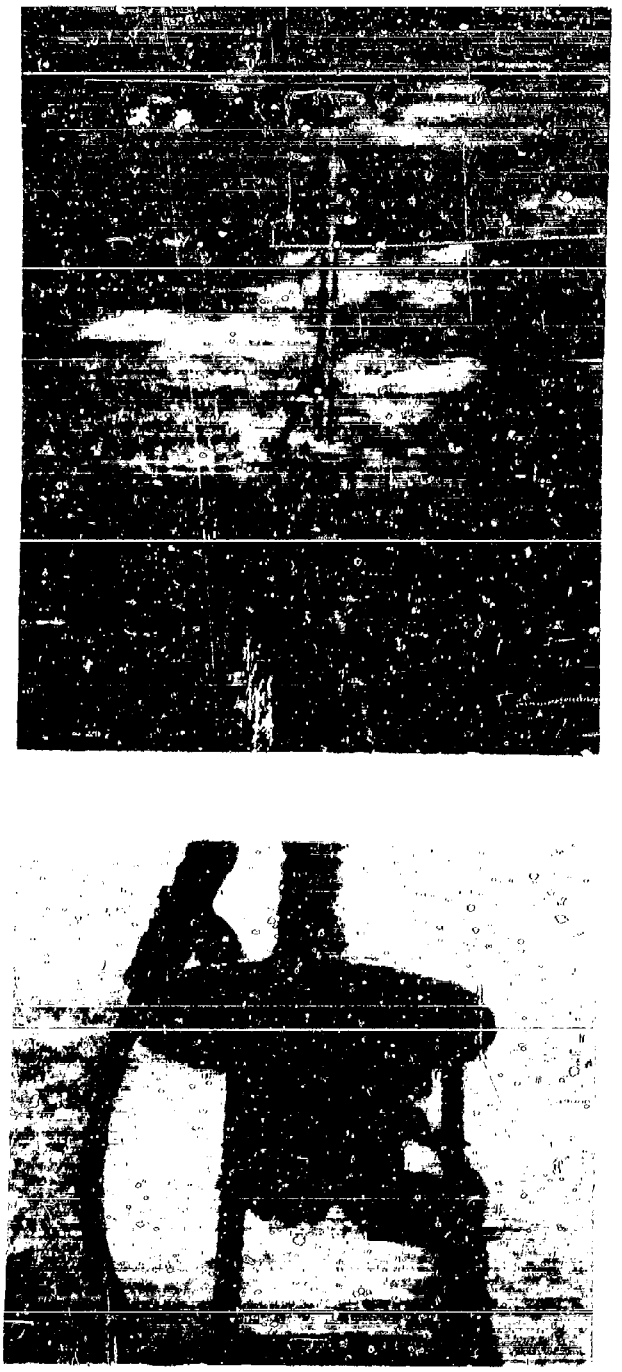

Fig. 15.1 Photograph of bivane and heated-thermocouple anemometer mounted on tripod (top), and close-up of base of bivane showing micro-torque potentiometers and other accessory equipment

aluminum shaft, is 2 grams. Movements of the vane in the plane of the horizon and in the vertical are transmitted to two Giannini microtorque potentiometers mounted in the base of the instrument (see lower photograph of Fig. 15.1); the azimuth shaft of the bivane is coupled to one potentiometer by a pair of 1:1 precision aluminum gears. Vertical movements of the vane are transmitted by means of a fine metal chain that passes over two identical aluminum pulleys located at the top and bottom, respectively, of the vertical shaft of the bivane. The second potentiometer is connected to the shaft of the lower pulley by a flexible coupling. The bivane is supported on three legs, one of which is 180° from the electrical zero of the potentiometer and serves as a convenient reference for orienting the bivane with respect to the axis of the sampling array.

Sensing elements of the heated-thermocouple anemometers comprise thermojunctions made from chromel-P and constantan wires measuring 0.005 cm in diameter; the wires are butt-welded by a spark-discharge technique in the field of a low-power binocular microscope. This facilitates production of junctions with uniform physical dimensions, a condition requisite for the use of a single calibration curve for several probes. The thermojunctions are incorporated in an electrical circuit first developed by Hastings.[6,7] The probe consists of four copper studs, arranged in a t-shaped pattern, that support the thermocouple wires; two junctions are heated to a temperature of about 200°C by a constant-current ac power supply; the third junction is unheated and assumes ambient air temperature. Passage of air over the heated junctions produces a cooling that results in a reduced thermal electromotive force. The fluctuations in ambient air temperature are compensated by the output of the unheated junction which is electrically opposed to the outputs of the heated junctions. Satisfactory operation of the anemometer probes depends largely on the maintenance of a constant heater current. The current to individual probes was monitored by a Weston ac milliammeter (Model No. 433) with a frequency range from 25 to 500 cycles sec^{-1} and an accuracy of about 0.75 percent. Proper current settings were determined by switching the milliammeter and an equivalent inductance into each power supply; an equivalent

dc resistance replaced the meter when it was switched out of the probe circuit. This procedure eliminated the need for considering the characteristics of individual current monitors in determining the proper heater currents for the various probes. As an additional precaution, a Sorensen voltage regulator (Type 100A), capable of maintaining line voltage within 0.5 percent, was placed in the primary of the heater-current supply circuit. The anemometer probes, as shown in Fig. 15.1, are mounted on the azimuth shafts of the bivanes and are thus headed into the wind by the action of the vane. The response of the probes is essentially independent of the wind direction; the heated thermojunctions are oriented parallel to the plane of the horizon and are relatively insensitive to the angle of attack of the wind vector. The response in the azimuth plane varies as the cosine of the angle between the horizontal wind vector and the azimuth heading of the vane (normally a small angle).

Wiring diagrams for the bivane and anemometer circuits are presented in Figs. 15.2 and 15.3. The bivane power supply (Fig. 15.2) comprises a conventional dc supply with an output of 150 volts that is fed into two adjustable-range potentiometers. The elevation potentiometer is adjusted for a full-scale deflection of 100° and the azimuth potentiometer for a full-scale deflection of 200°. The RC networks shown in the center of the figure provide critical damping and speed up the response of the chart recorders. Values of the components were selected to ensure resonance within the frequency range from about 0.5 to 2 cycles sec^{-1} for deflections of about 16° in azimuth angle, and about 8° in elevation angle. The heated-thermocouple power supply (Fig. 15.3) uses a 6.3-volt filament transformer as the source of ac heater current. The coarse and fine adjustments are used to set the reference output of the heated thermocouples at 13 millivolts which corresponds to a wind speed of 1 m sec^{-1}. A bucking voltage of 4 millivolts is introduced to improve the scaling of wind speed fluctuations. The output of the unheated thermojunction is fed through a Weston dc amplifier (Model No. 1411, Type 1) in series with a 0-1 milliampere chart recorder. Chart speed of the recorders was set at 3/4-inch per second.

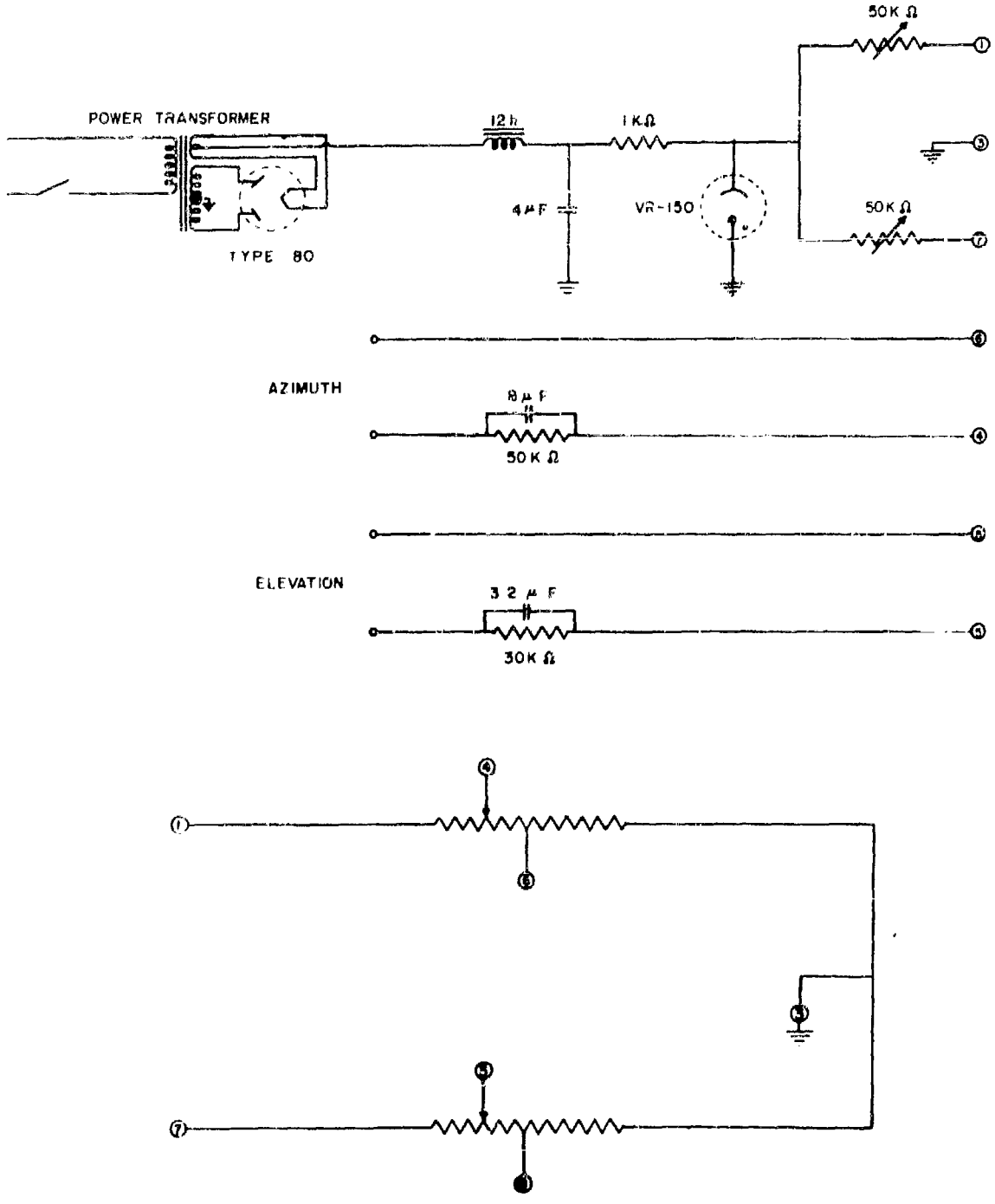

Fig. 15.2 Wiring diagrams of bivane power supply (top), RC networks for speeding up response of azimuth and elevation recorders (center), and the bivane microtorque potentiometers. Encircled numbers indicate electrical connections between the various components.

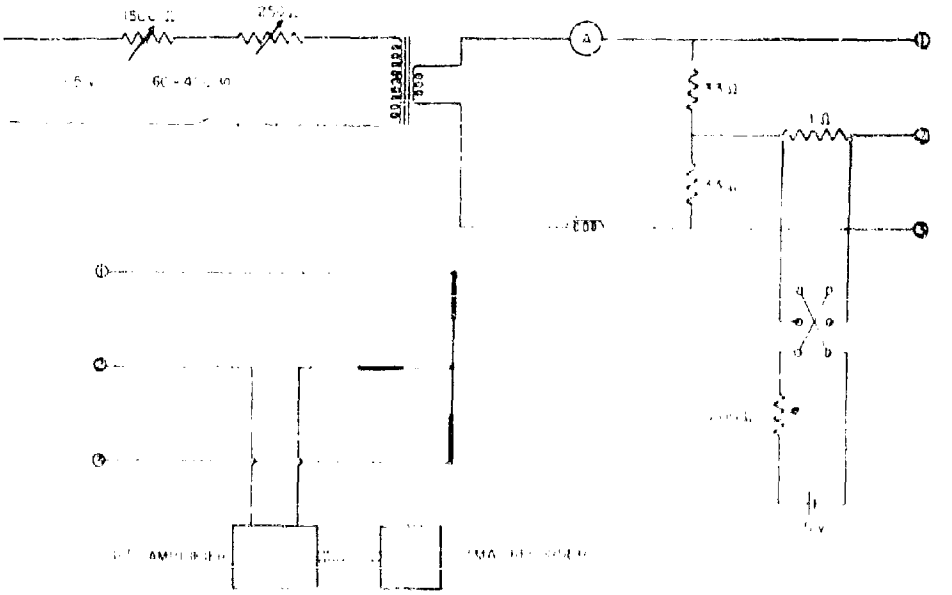

Fig. 15.3 Wiring diagrams for heated-thermocouple anemometer power supply (top) and the three thermojunctions (heavy lines in the diagram at the lower left) of the transducer. Encircled numbers indicate electrical connections between the various components.

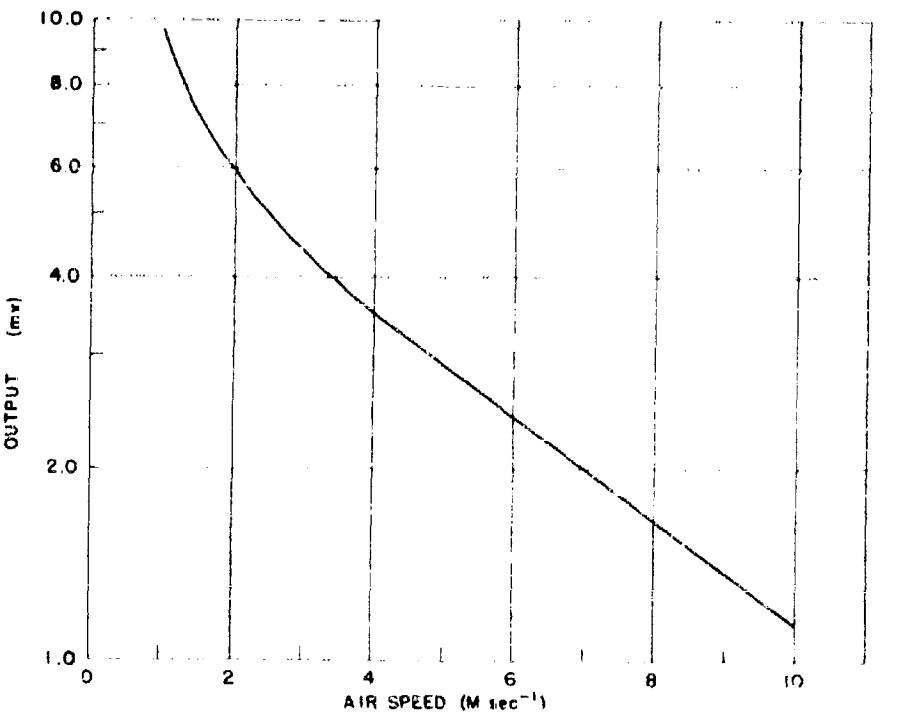

Fig. 15.4 Calibration curve for heated-thermocouple anemometers based on wind-tunnel tests at O'Neill, Nebraska during the Summer of 1956.

The calibration curve for the heated-thermocouple anemometers used in the Prairie Grass experiments appears in Fig. 15.4. This curve is a composite based on the results of a series of calibrations obtained in the wind tunnel at O'Neill, Nebraska. The average scatter of points about the composite curve varies from about 10 percent at both extremes of the wind speed range to about 5 percent within the 3 to 10 m sec^{-1} interval. The scatter is in part due to uncertainties in determining tunnel air speeds, particularly at low draft velocities. The absolute calibration of the heated-thermocouple probes is sensitive to large differences in ambient air temperature. The O'Neill calibration curve shown in Fig. 15.4 is significantly displaced from the calibration curve for Round Hill; the latter refers to an ambient air temperature of about 16°C which is considerably lower than the 30°C temperature for O'Neill. Numerous other factors, such as, dust collection on the thermojunctions, uncertainties in the recording apparatus, etc., also contribute to errors in the absolute calibration. In practice, therefore, absolute values of the wind speed indicated by the probes should be considered only as relative measurements. For example, in statistical tests to determine the homogeneity of turbulence, it is necessary to work with gustiness ratios or normalized variances, that is, ratios of the variance of wind speed and the square of the mean wind speed based on the probe data. If absolute values of wind speed are required, the probe data should be normalized with respect to the mean wind speed determined from the records of a suitable instrument (conventional 3-cup anemometer, for example). As shown in Fig. 15.4, the contraction of the heated-thermocouple calibration curve at high wind speeds makes it difficult to resolve wind speeds in excess of 11 m sec^{-1}. Expansion of this portion of the scale has so far been achieved only at the expense of eliminating important low wind speed ranges.

Response characteristics of the bivane and heated-thermocouple anemometer are presented in Fig. 15.5. Because of the nature of the sensing elements, the response of the bivane is a function of wind speed, particularly for wind speeds below 5 m sec^{-1}. Except for very low wind speeds, the chart recorder is the limiting factor in the speed of response

of both the bivane and heated-thermocouple anemometer. As mentioned above, critical damping of the azimuth and elevation movements of the vane is achieved through use of appropriate electrical resistances in series with the recorder (see Fig. 15.2); also, the response of the recorder is speeded up by an RC network. Since data from the bivane and heated-thermocouple anemometer are combined in determining vector wind components, it is essential that the characteristic times of both instruments be matched as closely as possible. According to Fig. 15.5, this condition is satisfied for wind speeds in excess of about 3 m sec^{-1}; within this range, both instruments faithfully resolve sinusoidal fluctuations with frequencies below 1 to 0.5 cycles sec^{-1}.

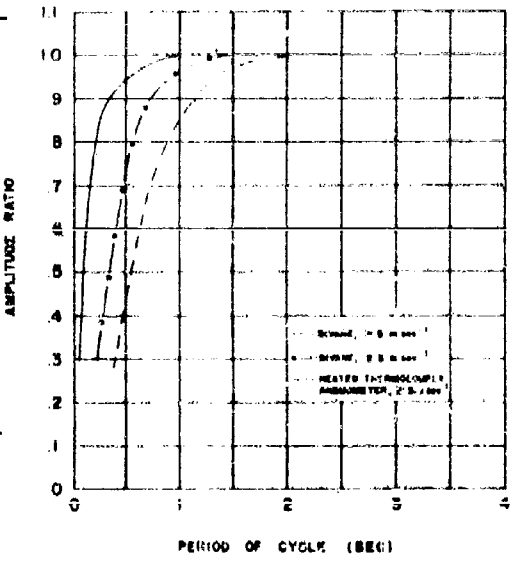

Fig. 15.5 Response of the bivane and heated-thermocouple anemometer to simple sine waves of varying frequency

Preparations for the Prairie Grass experiments involved installation of the recording equipment and auxiliary apparatus for the fast-response instrumentation in the interior of the truck shown in Fig. 15.6a. Power supplies for both the bivanes and heated-thermocouple anemometers were rebuilt and provisions made for handling information from six instrument assemblies. Data from the sensing elements were relayed to the junction box, located on the lower left side of the truck (see Fig. 15.6b), by seven-wire insulated cables. The interior of the truck was fitted with six standard relay racks. The racks on the left side contained the power supplies for the heated-thermocouple anemometers and bivanes, Weston inductronic amplifiers for the anemometers, voltage regulator, heater-current monitor, and a master timer for automatic sequence-operation of all the equipment (see Figs. 15.6c and 15.7). The racks on the right side of the truck contained eight Esterline-Angus dual recorders (0 to 1 ma),



(a)

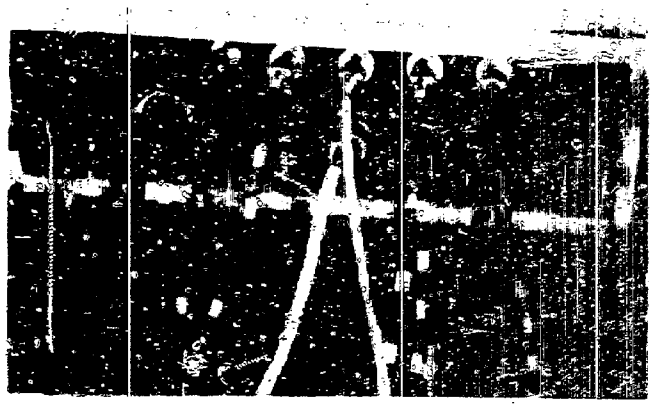

(b)



(c)



(d)

Fig. 15.6 Photographs of various accessory components of the fast-response instrumentation system used in Prairie Grass structure measurements: (a) Instrument truck; (b) junction box mounted beneath truck for transducer cables; (c) amplifiers and power supplies; and (d) high-speed chart recorders.

switches, and other auxiliary apparatus for operation of the recorders. (See Fig. 15.6d.) A tie point between the amplifiers, power supplies, and recorders was provided by a row of terminal strips in the interior of a 6-foot section of square duct mounted behind the relay racks. All of the wiring from the recorders to the amplifiers and power supplies was enclosed in watertight flexible tubing that passed through the walls and beneath the truck floor. A 200-watt, 400-cycle generator, driven by a 0.5 hp electric motor, was mounted on the lower right side of the truck; this ac source may be used for the anemometer heater circuits. Illumination in the truck interior was provided by two 40-watt fluorescent lamps that were mounted on the truck walls behind the relay racks.

15.3 Experimental Procedures

Ideally, empirical studies of turbulent structure should be made within a three-dimensional grid. However, it is usually not feasible to instrument this type of sampling network with the requisite density of individual observing stations. In the Prairie Grass experiments, the five instrument assemblies available for use were arranged along an axis either parallel or normal to the prevailing wind direction (south). Thus, in any single experiment, it was possible to obtain measurements along either a longitudinal or transverse orientation; no measurements were carried out along the vertical coordinate. The lateral and longitudinal spacings between the various instrument positions are indicated schematically in Fig. 15.7. Separation distances of 6, 12, 24, and 48 m were used in all the longitudinal experiments. Similar spacings were used in approximately half the transverse experiments (Run Nos. 5 through 43); for the remaining transverse experiments, the separations were: 1, 4, 16, and 64 m. This change in the transverse separation distances was intended to provide information on the lateral scales of fluctuations in the vertical velocity component (which are of very small magnitude at a height of 2 m) without sacrificing the maximum separation distance of approximately 100 m needed for scale information on the u- and v-components. Insofar as possible, the orientation of the bivane array was alternated

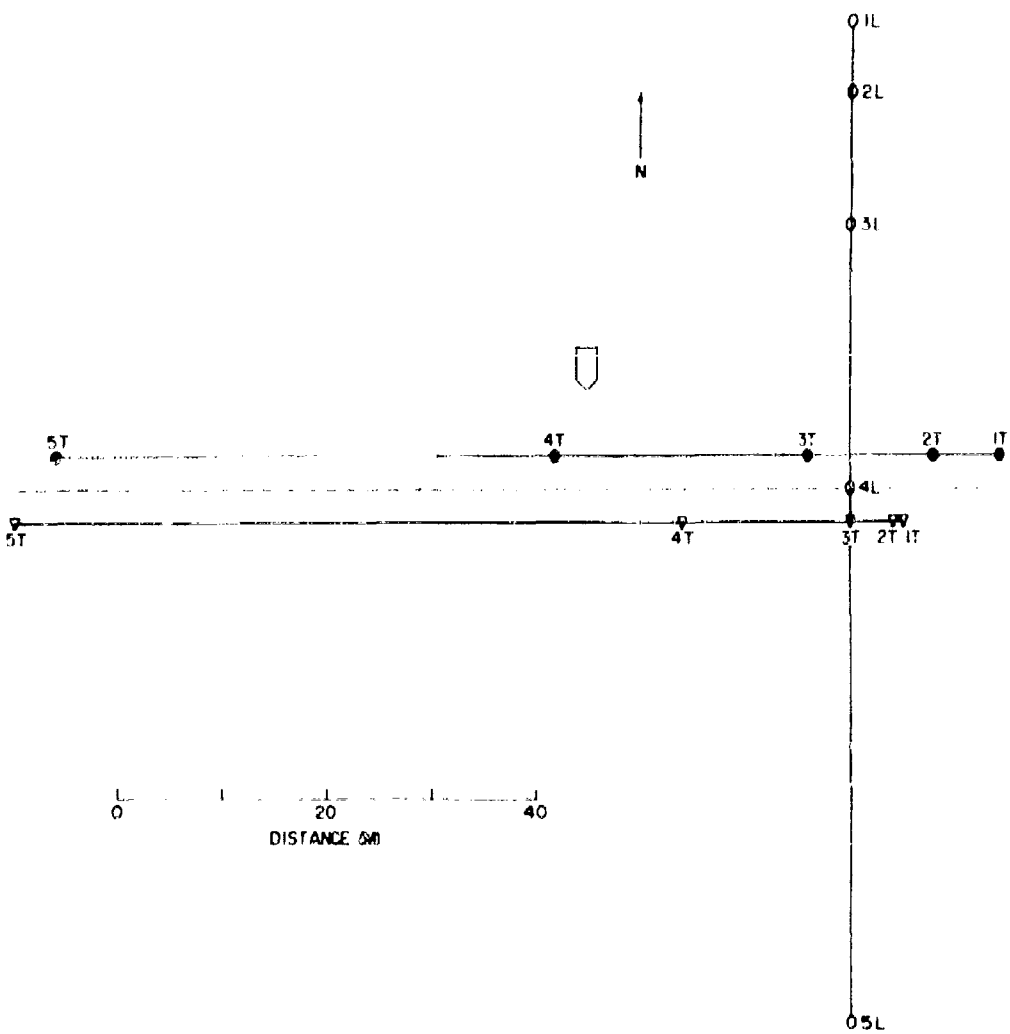

Fig. 15.7 Schematic diagram showing longitudinal and transverse spacings of instrument assemblies during structure experiments. Dashed line refers to actual location of transverse array and large open symbol shows location of the instrument truck.

between successive experiments so that the longitudinal and transverse observations would be as closely spaced in time as possible. Because of the possibility that the instrument truck might significantly disrupt the natural wind flow at Positions 1 and 2 of the longitudinal array (see Fig. 15.7), few longitudinal experiments were carried out for winds blowing from south-southwest or southwest.

The location of the longitudinal and transverse axes of the sampling array (Fig. 15.7) with respect to the diffusion network coordinates, which were oriented along true North-South, East-West lines, was established by a careful survey of the field site prior to the start of the experiments. Separation distances between individual sampling stations were measured with precision steel tapes. Orientation of the azimuth scales of the bivanes with respect to the axes of the array was accomplished as follows: A small surveyor's transit was mounted on the base plate of each bivane tripod and the plate was rotated until the position of the reference leg of the bivane was exactly (±0.3°) parallel (longitudinal orientation) or normal (transverse orientation) to the axis of the array. This technique was very satisfactory although on a few occasions during the experiments adjustments had to be made in the positions of the base plates. The diffusion experiments were usually in pairs with approximately two hours of separation between successive gas releases. This scheduling afforded an opportunity to obtain structure measurements along both a transverse and longitudinal orientation with a minimum time-lapse intervening. To facilitate rapid changes in orientation of the bivanes within this interval, two complete sets of tripods and electrical cables were utilized. These were left permanently in position, except for the changes in transverse spacing after Run No. 43, and only the bivanes needed to be moved. Due to the length of time required to prepare for a structure measurement (1 to 2 hr), it was difficult to find a satisfactory method for improving the orientation of the arrays with respect to the mean wind direction observed during the measurement periods. Experience showed that forecasts of local mean wind direction for the 20-min sampling periods were not sufficiently accurate to warrant the additional effort involved in relocating

the axes of the arrays. Also, the time required for a complete change-over might well have disrupted the scheduling of the diffusion experiments.

The 20-min observation periods were incorporated in the Prairie Grass field program and were centered on the midpoint of the gas release for the diffusion experiments.[1] The synchronization of the structure measurements with the diffusion experiments and other meteorological observations was facilitated by a master electrical timer located in the instrument truck. Besides starting and stopping the high-speed chart recorders for the fast-response instrumentation, the timer also activated side-marker pens that placed time marks on all the charts at 15-sec intervals; controlled the recorders for slow-response meteorological observations; and placed audio time signals on a telephone line to the sulfur-dioxide source that determined the scheduling of the gas release. Figure 15.8 shows the wiring diagram for the timer. It consists essentially of a 1-rpm synchronous motor that drives a gear train; individual gears are fitted with metal pins that activate microswitches. The 10-position stepping switch shown at the lower left of the figure was returned to the zero position at the conclusion of each 20-min observation period; this action reset the master timer so that it was ready for the next experiment.

15.4 Accuracy of the Measurements and Selection of Data for Analysis

With few exceptions, the accuracy of the bivane and heated-thermocouple anemometer measurements is limited by the resolution of the chart recorders. In most cases, the azimuth data are considered accurate to within about 3° and the elevation data to within 2°; these estimates do not hold for mean wind speeds below 3 m sec^{-1}. In the case of the anemometer data, it has already been emphasized that the absolute values of wind speed are not to be considered representative. The relative wind speed data are considered accurate to about 5 percent for the range from 3 to 10 m sec^{-1}; outside this range, a larger percentage of uncertainty applies. These estimates refer to the data prior to abstraction and processing; both of these operations add additional uncertainties.

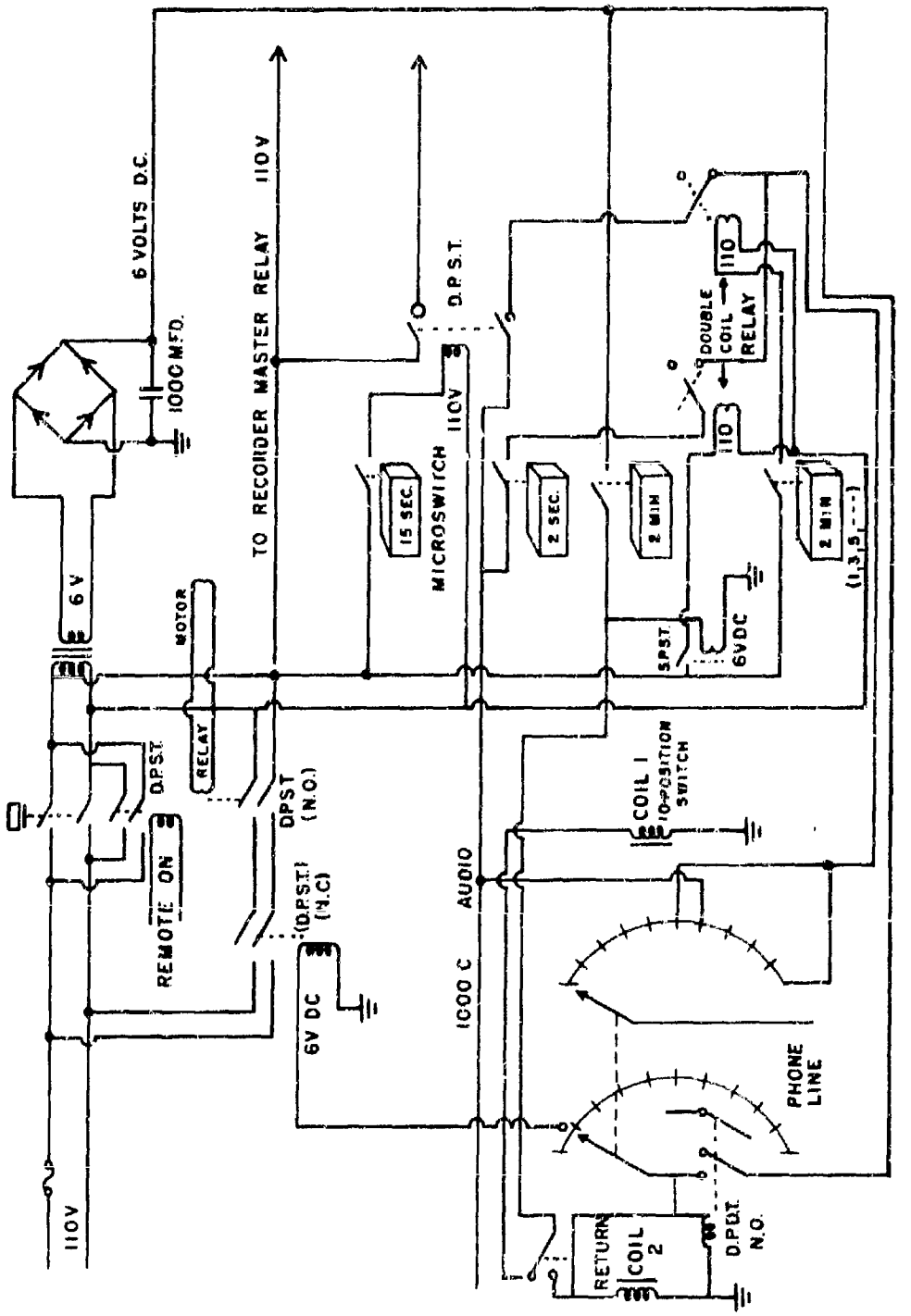

Fig. 15.8 Wiring diagram for master electrical timer that controlled the programming of the meteorological observations during the Prairie Grass experiments

In selecting data for spectral analysis, attention was principally directed to experiments in which satisfactory measurements were available for all instrument positions. Careful inspection of the original chart records established the maximum number of experiments that appeared to fulfill these conditions. After the data for these experiments had been abstracted at Iowa State College, objective tests of the homogeneity of the data for individual observation periods guided the final election of cases for spectral analysis. In general, about half the data (30 experiments) were judged suitable for this program.

REFERENCES

1. Barad, M. L. (ed.), "Project Prairie Grass, A Field Program in Diffusion," Geophysical Research Papers No. 59, Vols. I and II, AD-152572 and 152573, AF Cambridge Research Center, (July 1958).

2. Cramer, H. E., and F. A. Record, "The Variation with Height of the Vertical Flux of Heat and Momentum," J. Meteor., 10, 219-26, (1953).

3. _____, "Power Spectra of the Eddy-Velocity Components," J. Meteor., 12, 146-151, (1955).

4. _____, G. C. Gill, and F. A. Record, "Research on Atmospheric Turbulence and Associated Diffusion of Aerosols and Gases Near the Earth's Surface," Final Rep. under Contract No. AF 19(604)-145, Massachusetts Institute of Technology, 49 pp., (1954).

5. Dryden, H. L., G. B. Schubauer, W. C. Mock, Jr., and H. K. Skramstad, "Measurements of the Intensity and Scale of Wind-Tunnel Turbulence and Their Relation to the Critical Reynold's Number of Spheres," NACA Rep. No. 581, 32 pp., (1937).

6. Hastings, C. E., "A New Type Instrument for Measuring Air Velocity," AIEE Misc. Paper No. 49-23, 7 pp., (1949).

7. _____, and C. R. Weislo, "A Compensated Thermal Anemometer and Flowmeter," AIEE Misc. Paper No. 51-149, 11 pp., (1951).

8. Hewson, E. W., H. E. Cramer, G. C. Gill, and F. A. Record, "Research on Turbulence and Diffusion of Particulate Matter in the Lower Layers of the Atmosphere," Final Rep. under Contract No. AF 28(099)-7, Massachusetts Institute of Technology, 80 pp., (1951).

9. Howcroft, J. G., and J. R. Smith, "A Selective Analysis of the Scale of Atmospheric Turbulence," J. Meteor., 13, 75-81, (1956).

10. Lettau, H. H., and B. Davidson (eds.), Exploring the Atmosphere's First Mile, Pergamon Press, London, 2 vols., 578 pp., (1957).

11. Mac Cready, P. B., "Structure of Atmospheric Turbulence," J. Meteor., 10, 434-449, (1953).

12. Panofsky, H. A., and R. J. Deland, "Structure of Turbulence at O'Neill, Nebraska and its Relation to the Structure at Brookhaven National Laboratory, Upton, Long Island," AFCRC-TR-58-201, Contract No. AF 19(604)-1027, (1957).

13. Suomi, V. E., "Energy Budget Studies at the Earth's Surface and Development of the Sonic Anemometer for Spectrum Analysis," AFCRC-TR-56-274, Contract No. AF 19(122)-461, (1957).

14. Tukey, J. W., "The Sampling Theory of Power Spectrum Estimates," Symposium on Applications of Auto-Correlation Analysis to Physical Problems, at Woods Hole, O. N. R., Washington, D. C., 47-67, (1949).

CHAPTER 16

AN ANALOG-DIGITAL AUTOMATIC DATA-PROCESSING MACHINE

R. M. Stewart, Jr., and G. A. Richardson
Iowa State College

16.1 Introduction

The data-processing equipment used to reduce the fast-response wind data obtained by M. I. T. personnel has been described in a recent publication.[1] The purpose of this chapter is to summarize the more significant features of the data-processing system; no attempt will be made to describe the equipment or the circuitry in detail.

16.2 Background

Work was started in the physics department of Iowa State College during the Summer of 1954 on development of an automatic data-processing system which would efficiently handle and process the large amount of data necessary to study quantitatively the scale of turbulence in the atmospheric boundary layer. Experience gained by the authors and their associates during Project Great Plains, and subsequently reported,[2,3] pointed up the magnitude of the task involved and the need for a more carefully integrated experimental program than that which had gone before.

As described in Chapter 15, the raw data gathered by M. I. T. consisted of sets of Esterline-Angus paper tape records of elevation angle, azimuth angle, and wind speed measured simultaneously at five instrument locations.

The data-processing problem was finally resolved into that of producing an analog electrical signal from a conventional inked-line trace on Esterline-Angus paper, sampling the analog signal at an appropriate rate, and producing (as output) frequency distribution histograms, values of the amplitudes of the individual samples, and mean values of the samples. The output was in digital form with the individual amplitude values

being punched on IBM punch cards for further processing by a digital computer. Thus, the data-processing machine herein described is a hybrid: part analog and part digital. The system includes as major elements the input section which translates the paper tape recording into an electrical analog signal, the data-processing section which modifies the signal in the required manner, and the output section which presents the results of the analyses of the data in various forms for further use.

16.3 Equipment Description

The complete data-processing apparatus consists of several parts which have distinctly different functions: data input section, data processing section, two output sections, and control sections. Most of the sections are composed of several smaller units working together. Power supplies furnish electrical power to the various units. Besides these sections, there are special test facilities and auxiliary units. The general operation of the various parts of the apparatus are discussed in the following paragraphs, aided by block diagrams. The breakdown of the various sections into the individual units is shown in the tabulation below:

Data Input Section
- Tape Reader

Data Processing Section
- Moseley Servo Voltmeters
- Multiplying Potentiometers
- Cathode Followers

Output Section - A
- Accumulators
- Pulse Distributors
- Esterline-Angus Recorders
- Timing Unit
- Pulse Divider

Auxiliaries
- IBM 024 Manual Card Punch

Output Section - B
- Moseley Servo Voltmeters
- Coleman Digitizers
- Rectifier Readout Unit
- IBM 523 Summary Card Punch

Control Section
- Automatic Stop Control
- Readout Command Unit
- Readout Control Unit
- Card Sequencer
- Card Dater

Test Facilities
- Accumulator Calibrator
- Electronic Switch and Sweep Circuit

A block diagram of the complete system is shown in Fig. 16.1. The diagram shows alternate circuit arrangements for velocity linearization and for obtaining the mean values of the azimuth and elevation angles. A photograph of the assembled equipment is shown in Fig. 16.2.

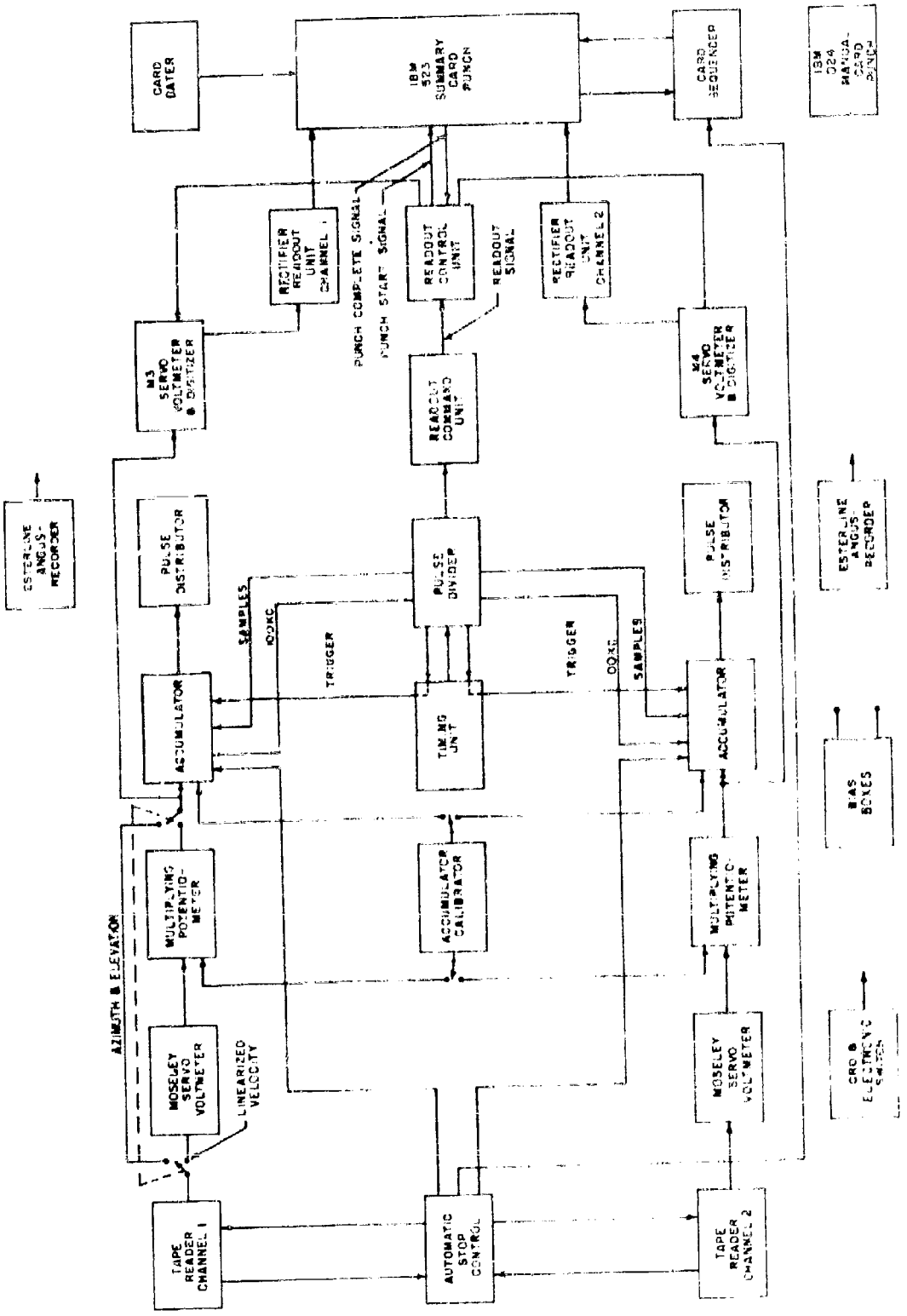

Fig. 16.1 System block diagram of automatic data-processing machine with Esterline-Angus paper tape input



Fig. 16.2 Photograph of assembled equipment

Extensive use has been made of plug-in units in various circuits of the machine. In general, these plug-in units are circuits which have specialized and critical functions to perform. This design philosophy makes for ease in routine maintenance and trouble-shooting since the plug-in units can be replaced by spares in the event of circuit failure.

16.3.1 Data Input Section - Tape Reader

The input section, referred to here as the Tape Reader, is the critical section of the system since the ability of the data-processing and output sections to yield a good analysis of the input data depends upon the electrical analog signal being an accurate representation of the input data.

The Tape Reader is essentially a transducer which converts an inked trace on Esterline-Angus recording paper to an analog electrical signal. The Tape Reader includes a paper transport mechanism, an optical system, a photomultiplier pickup tube, and signal-shaping amplifiers. The dc output voltage is proportional to the position of the trace as measured from a preselected reference line on the recording paper. The mechanical arrangement of the Tape Reader is shown in Fig. 16.3.

The paper transport mechanism is a conventional Esterline-Angus unit driven with a synchronous motor. The optical system consists of an incandescent lamp source, an aperture, a 135 mm f/4.5 lens, a Wratten No. 60 filter (green), and a revolving front-silvered mirror driven by an 1800-rpm synchronous motor. The coordinate markings on the paper record (EA No. 4415-X) are printed with pale-green ink, and red ink (EA blue-print ink) is used for making the traces. The angle of the mirror, in respect to its axis, is set so that the arc traced by the light spot on the paper records is the same as that made by the recording pens. The platen which backs the paper in the transport mechanism is polished to increase the over-all reflectivity.

The Type 6292 photomultiplier tube has its peak response in the blue region. As a result, there is not a large difference in the amount of light reflected from the white paper background and the green coordinate markings. The response of the system to red light is very low; and

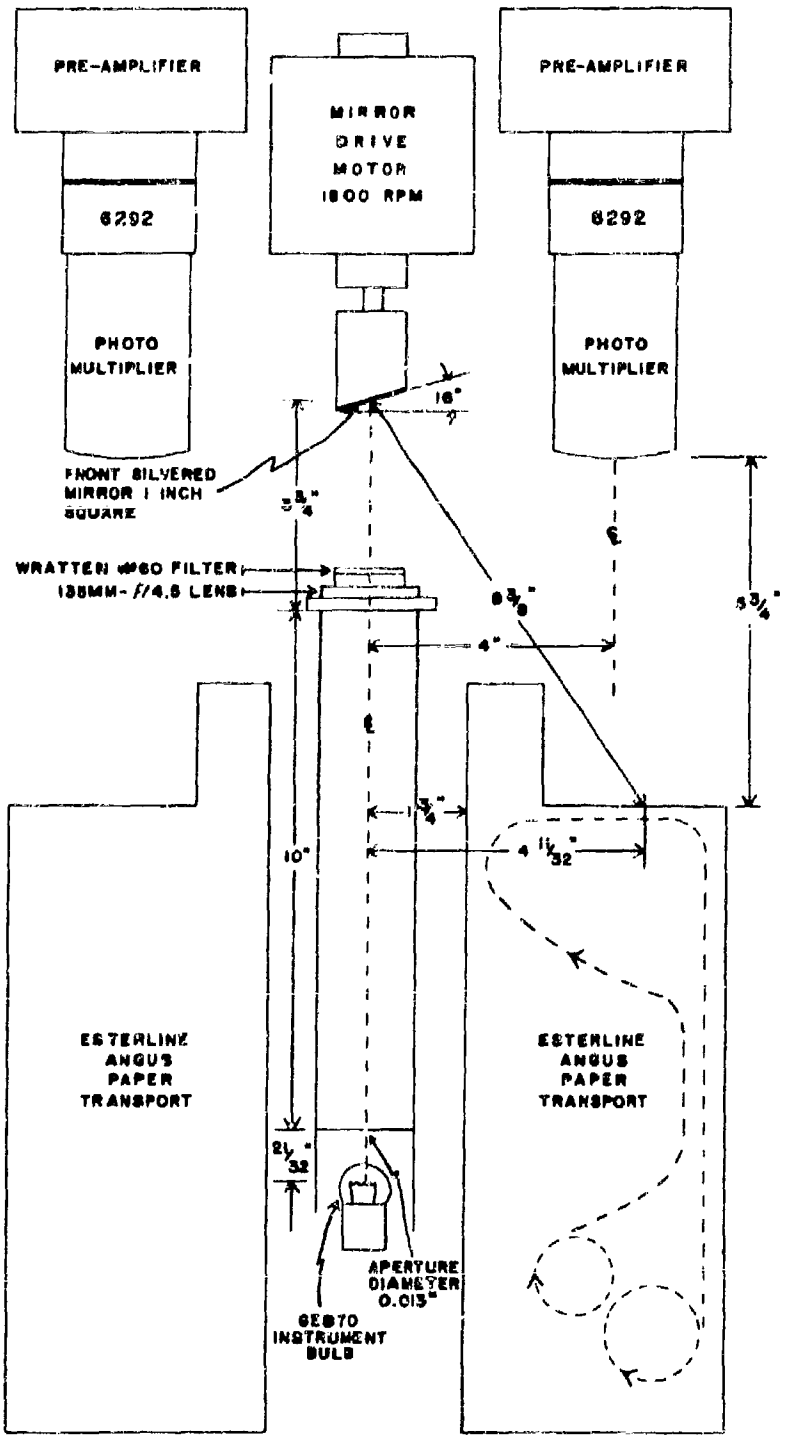

Fig. 16.3 Mechanical and optical mechanisms of reader for Esterline-Angus paper tape

the discrimination of the system to any except green light is aided by the Wratten filter. The photomultiplier tube is fitted with a Mumetal shield to reduce magnetic noise pickup.

The light spot, as it sweeps across a paper record, is reflected into the photomultiplier tube, except when the spot crosses the red ink line or when it sweeps across adjustable black nonreflecting masks at either edge of the paper. The electrical output of the phototube is a negative-going pulse, the duration of which is the same as the time required for the spot of light to describe an arc once across the record. A sharp positive "spike" appears in the pulse when the spot crosses the red trace, since very little of the green light is reflected from the red ink. A 3-stage preamplifier, connected to the anode of the photomultiplier, provides an output voltage of approximately 50 volts peak-to-peak. A clamp circuit in the output stage acts to compensate for slightly different path lengths of the light beam as the mirror rotates. Figure 16.4 is a block diagram of the Tape Reader.

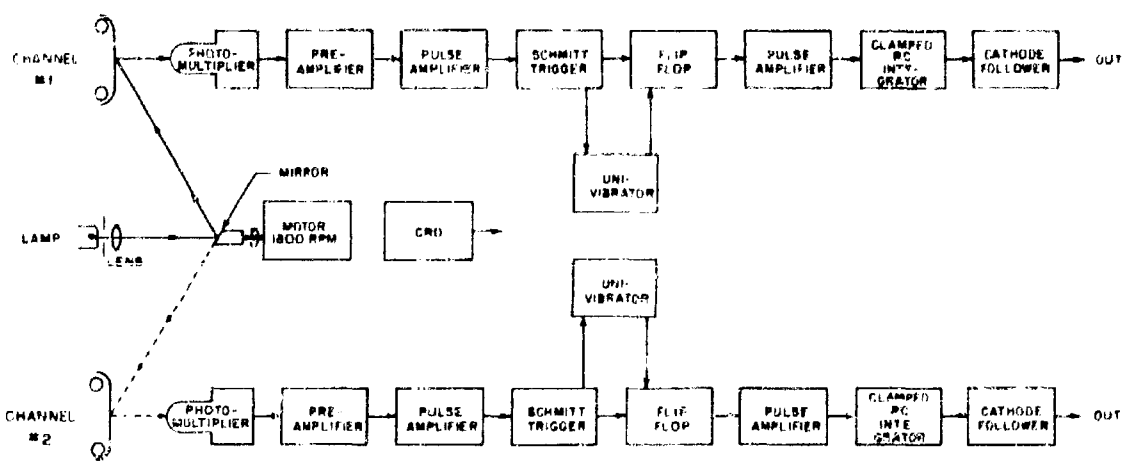

Fig. 16.4 Block diagram of tape reader

The preamplifier is fed into a noninverting pulse amplifier to shape and square the pulse and remove incidental noise which arises as the light spot sweeps off the edges of the paper. Additional noise arises as a result

of nonuniformity of the paper surface. The output of the pulse amplifier triggers a Schmitt trigger-circuit which serves to reproduce the input waveform at a larger amplitude than the input, but with faster rise-and-fall times. The output of the Schmitt trigger is differentiated and the negative pulses in the resulting wave in turn trigger a flip-flop circuit. The output of the flip-flop circuit is fed to a saturating pulse amplifier. The combination of the flip-flop and pulse amplifier produces a pulse output of constant amplitude and of pulse width proportional to the position of the ink trace from the reference line on the record. This output is fed to a clamped RC integrator which provides a unidirectional output (quasi-direct voltage) which is proportional to the width of the output pulses, and hence to the position of the inked trace on the Esterline - Angus input tape. The proper behavior of the integrator requires that the capacitors have low dielectric absorption. Selected Sprague Black Beauty Telecap capacitors were found to be satisfactory. A cathode follower output amplifier provides for impedance matching from the integrator to subsequent circuits.

Two identical photomultiplier and amplifier channels are provided, one for each paper record. The same optical system is used for both. Either, or both, transport mechanisms may be operated at a given time.

Metal fingers, connected to the Automatic Stop Control, ride along the edge of each paper record. Spots of conductive ink are placed at the end of each record. A selector switch in the Automatic Stop Control provides for the possibility of stopping the Tape Reader and all associated equipment whenever the conductive ink on either of the records passes under the metal fingers. The stopping function is also under manual control.

16.3.3 Data-Processing Section

16.3.2.1 Moseley Servo Voltmeters and Multiplying Potentiometers

The output of the Tape Readers, representing the sampled electrical analog of the original inked paper tape recording, may require additional processing before analysis. The original recording is made

through the use of nonlinear instruments, in the case of the wind speed records, and it is then desirable to "linearize" the information before passing it to the analysis section of the equipment. Also, at times, it is desirable to take components along specified axes or perform other mathematical operations on the original information before proceeding with the analysis. These facilities are provided by the input Moseley servo voltmeters and their associated multiplying potentiometers.

The input Moseley servo voltmeters are in effect self-balancing potentiometers. They have linearly-divided slide-rule type scales and self-contained calibration circuits. Their rated accuracy is 0.25 percent of full scale and their rebalancing time is 1 second full scale. The servomotor of each voltmeter is coupled through a cable-pulley mechanism to a shaft which extends through the front panel. The angle of rotation of the shaft is accurately proportional to the input voltage and to the scale pointer position. Various types of precision potentiometers may be connected to the shaft, singly or in tandem, to perform a variety of multiplying functions.

The manner in which multiplying is achieved is shown in Fig. 16.5. The output voltage of the potentiometer, E_2, is proportional to the product of the input voltage, E_1 and $f(\theta)$, where $f(\theta)$ describes the change of resistance of the potentiometer as a function of the angle of rotation. It is assumed that loading of the potentiometer output is very slight. Expressed mathematically:

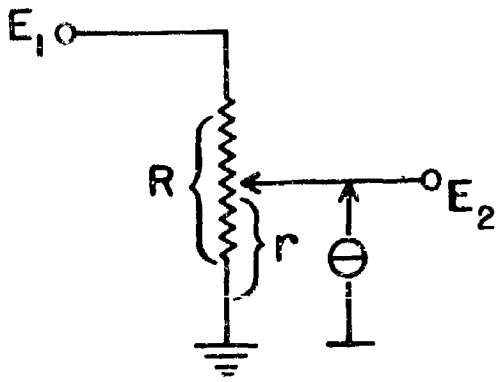

Fig. 16.5 Potentiometer multiplying circuit

$$r = R\, f(\theta) \tag{1}$$

$$E_2 = \frac{r}{R} E_1 = E_1 f(\theta) \tag{2}$$

Equation (2) illustrates the multiplying property of the circuit. A

specific application involves "linearizing" a velocity record. In this case, the velocity information is recorded with a nonlinear transducer and it is desirable to produce an analog electrical signal modified (linearized) so that equal voltage increments in the output represent equal velocity increments. The analog output voltage of a Tape Reader is connected to the input terminals of a Moseley servo voltmeter. The shaft of the voltmeter is connected to a tapped potentiometer. The tapped potentiometer is chosen so that its resistance vs. rotation function is approximately that which yields an output voltage which is a linearized representation of the nonlinear input data. The potentiometer is providedwith 20 taps in addition to the end connections. The exact nonlinear function required of the potentiometer is achieved by shunting various sections of the potentiometer with precision variable resistors. Then, as the input voltage to the voltmeter varies, it yields a linearized output from the tapped potentiometer.

Three types of potentiometers are available for use with this equipment: tapped potentiometers described above, linear potentiometers, and sine-cosine potentiometers. The possibility of connecting more than one potentiometer to a servo-motor shaft, and the possibility of utilizing the two servo voltmeters and their potentiometers in various circuits, gives this circuit arrrangement wide flexibility.

16.3.2.2 Cathode Followers

The Cathode Follower chassis comprises eight independent cathode follower circuits. (See Fig. 16.6.) The cathode followers are used as operational amplifiers or impedance transformers for connecting signals to the Accumulators, the Esterline-Angus Recorders, and other equipment. The gain of each of the cathode followers is just slightly less than unity, precisely held at a fixed value by high amplification in the feedback loop and voltage stabilization afforded by a gaseous voltage-regulator tube. Wide-band amplifier construction techniques are utilized throughout. The circuits have a linear voltage input-output curve for input voltages up to ±40 volts, and for load resistances greater than 2000 ohms. The input-output curve is linear for smaller load resistances but the voltage range

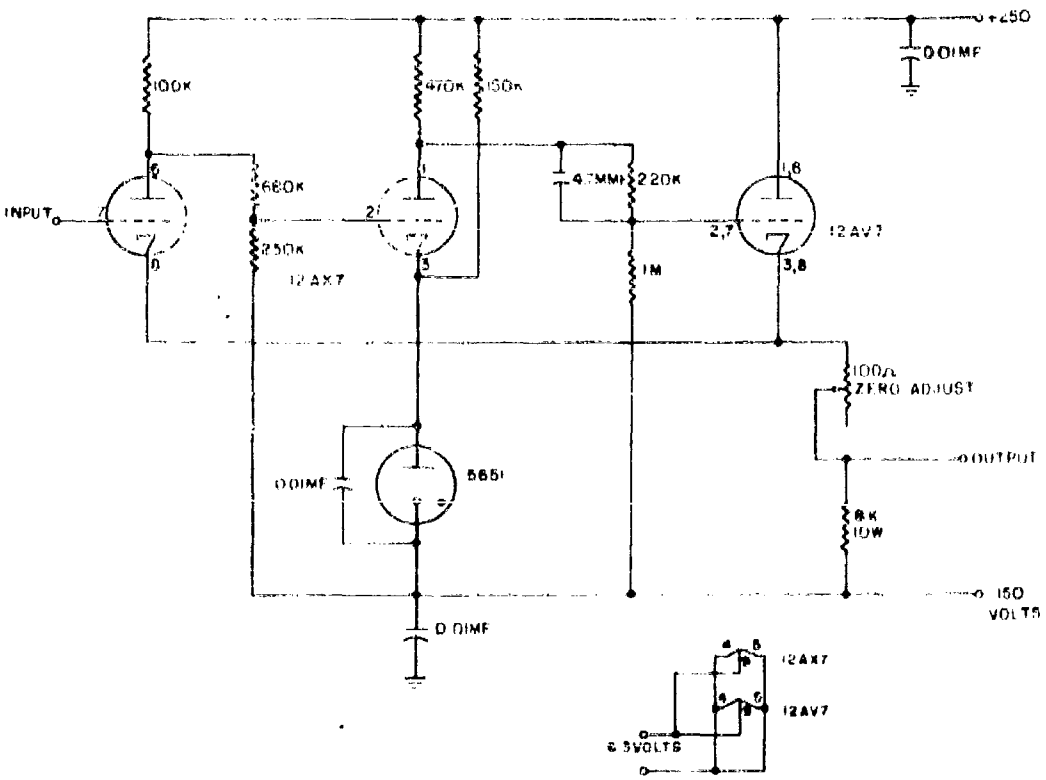

Fig. 16.6 Circuit diagram of cathode follower operational amplifiers

is decreased. A ZERO adjustment is provided to permit the output voltage to be set at zero for zero-input voltage. A switch is provided for use with this adjustment. The switch short-circuits the cathode follower input terminals and connects the output to a 5/0.5-volt voltmeter. This adjustment has negligible effect on gain or linearity.

16.3.3 Output Sections

Two independent output sections are built into the system. Ouput Section A includes the Accumulators, Distributors, EA Recorders, Timing Unit, and Pulse Divider. Signals from either of the Multiplying Potentiometers, or directly from the Tape Readers, are fed to the Accumulators which yield information from which the mean ordinate of the record may be computed. The Accumulators also feed signals to the Pulse Dis-

tributors which provide histograms of the sampled input data. When required, the Tape Reader can also drive Esterline-Angus recorders to provide a paper tape record of the data either before or after processing by the Multiplying Potentiometers. The main function of the Timing Unit is to provide a clock for the system. The Pulse Divider sets the sample rate.

Output Section B includes the Moseley Servo Voltmeters with their associated Coleman Digitizers, Rectifier Readout Units, and the IBM 523 Summary Card Punch. Signals are fed to Section B from the Multiplying Potentiometers after processing or directly from the Tape Readers. The Summary Card Punch produces a punched card record of the sampled data after it has gone through the desired processing in the Multiplying Potentiometers. A given stack of cards may be rerun to accumulate additional data. Fourteen of the eighty columns of the IBM cards are used for identification, dating, sequencing, and similar purposes. The remaining columns are available for other uses.

16.3.3.1 Accumulator

The function of the Accumulator (Fig. 16.7) is to sample the slowly time-varying analog electrical signal derived by the Tape Reader from the input tape, to translate the ordinate of the input signal into a burst of 100-kc pulses with the number of 100-kc pulses proportional to the ordinate of the sample, to count the total number of pulses in all of the bursts during the course of a run of data, and to count the total number of bursts, or samples. The total number of 100-kc pulses and total number of samples gives information from which the mean ordinate may be calculated. The Accumulator also yields an output to the Distributor which in turn sorts the 100-kc sample bursts into class intervals on the basis of how many 100-kc pulses each burst contains.

The signal input from the Tape Reader, either directly or after linearization or other mathematical operation, is fed to one of the input terminals of the Accumulator phantastron. A trigger signal from the Pulse Divider is fed to another of the phantastron input terminals. The circuit is arranged so that the phantastron output pulse width is propor-

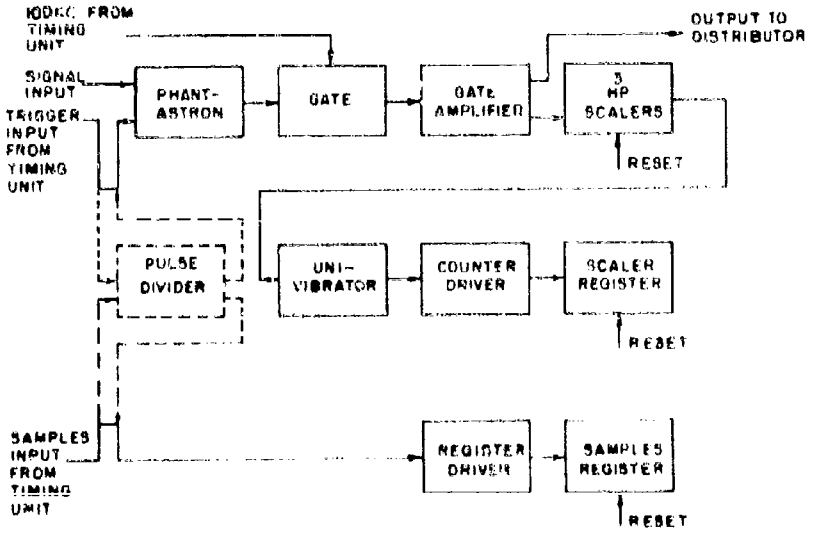

Fig. 16.7 Block diagram of accumulator

tional to the amplitude of the signal input. The phantastron also serves to standardize the amplitude and shape of the output pulse. Both the amplitude of the trigger pulse and its bias must be carefully controlled since both factors influence the width (run-down time) of the output pulse of the phantastron. All of the critical resistors in the phantastron circuit are of similar low temperature coefficient material (20 parts per million per °C) so that temperature variations influence all the resistors in the same manner.

The output signal of the phantastron feeds the gate circuit, and opens the gate for a time corresponding to the width of the pulse. A 100-kc signal is admitted to the gate for the length of time the gate is opened, thus the number of 100-kc pulses admitted per sample is proportional to the width of the gate and, in turn, to the amplitude of the signal input. After amplification, the 100-kc bursts are fed to three decade scalers and a mechanical register which count the total number of 100-kc pulses. This total number of pulses corresponds to the summation of the ordinates of all of the samples. A second output from the gate amplifier is fed to the Distributor chassis.

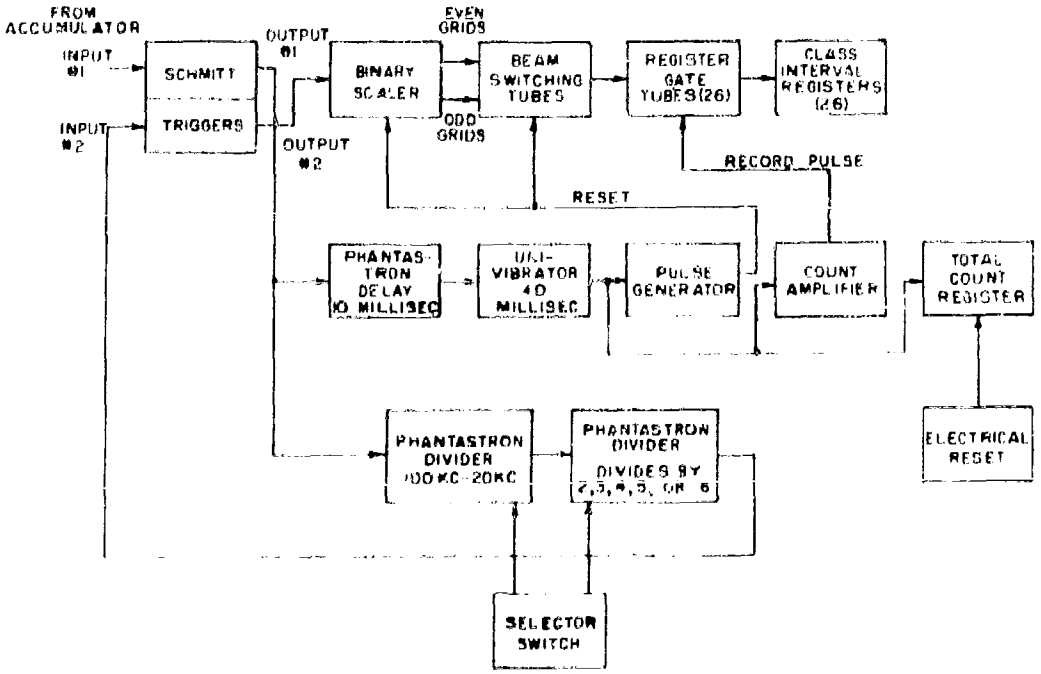

Fig. 16.8 Block diagram of pulse distributor

A separate input from the Pulse Divider, synchronized with the trigger input, feeds a Samples Register circuit to give the total number of samples during a data run.

16.3.3.2 Pulse Distributor

The Pulse Distributor (Fig. 16.8) operates on the samples supplied by the Accumulator and ranks each sample in one of 26 possible class intervals. Each sample is recorded on the appropriate class interval register to provide a histogram for each run of data. A separate total-count register provides a check on the number of samples recorded in the class interval registers.

The pulse bursts from the Accumulator are fed into a Schmitt trigger circuit (input No. 1 of Fig. 16.8) for amplitude and shape standardization. The pulse bursts are then fed to both a pulse delay circuit and a pulse divider circuit. The delay circuit forms an output pulse 40 milliseconds long with its starting time delayed by 10 milliseconds to allow

for counting the 100-kc pulses in the burst. This output pulse performs three functions. The trailing edge is used to reset the binary scaler and the beam-switching tubes. This reset function is accomplished by shaping the output pulses in a pulse generator to provide negative pulses, properly delayed in respect to the original pulse bursts, which reset the binary scaler and beam-switching tubes to their "normal" positions. The leading edge of the output pulse provides a pulse that turns on the register gate tubes which connect the beam-switching tubes to the registers. In this function, the output pulse is fed through a count amplifier and in turn to all of the gating tubes. The appropriate register is then operated. The output pulse is also fed directly to a total-count register. An electrical reset circuit is also provided for this total-count register.

The divider circuit permits dividing the number of pulses in a burst by a fixed amount. The pulse burst is fed into a phantastron divider which has a fixed division ratio of five (100 kc to 20 kc). It is then passed to a second phantastron divider which may divide by 2, 3, 4, 5, or 6 which is under the control of a selector switch. The selector switch also permits straight-through operation, bypassing both phantastron dividers. Thus, the total division may be a factor of 1, 10, 15, 20, 25, or 30. The output of the divider circuits is fed into a Schmitt trigger circuit for amplitude and shape standardization and then to a binary scaler. The binary scaler operates the beam-switching tubes to cause the count to advance according to the number of pulses in the burst. The 26 outputs of the beam-switching tubes are each connected to a gate circuit and, in turn, to a register. Only the register, which is connected through the gate tube and which is fed from the ON output of a beam-switching tube, is operated by the recording pulse. The "width" of each class interval window, in number of 100-kc pulses, is determined by the setting of the selector switch.

The beam-switching tubes were selected so that they would work with each other with the same nominal bias voltages. This selection was particularly needed in using early models of this tube. Later models appear to have more nearly the same characteristics.

16.3.3.3 Esterline-Angus Recorders

The recorders used for making duplicate tape records or records of processed data are conventional Esterline-Angus A.W. Graphic twin flush instruments equipped with 1-milliampere full-scale elements. A 60-cps voltage, adjustable in amplitude, is introduced in series with the signal to the current element. This 60-cps voltage is used as a "jitter" or "keep-alive" voltage to break the static friction of the pen point with the paper. The amount of jitter is adjusted to yield about one and one-half times normal line width.

16.3.3.4 Timing Unit

The Timing Unit establishes a time reference for the Accumulator and associated equipment. A 100-kc crystal oscillator (Fig. 16.9) drives a Schmitt trigger circuit for pulse shaping and amplitude standardization. The Schmitt circuit has two outputs. One output drives a dual cathode follower with two output terminals. Each cathode follower output signal is used as a clock input for an Accumulator. The second Schmitt circuit output drives a series of four cascaded 10:1 phantastron dividers yielding an output of 10 cps. This 10-cps signal is then fed through the Pulse Divider where it may again be divided. It is then returned to the Timing Unit. One path takes the signal through an amplifier and dual cathode followers. The two output signals of these cathode followers become trigger signals for the Accumulators. A second signal path is to another cathode follower which furnishes a signal to the samples register driver on the Accumulator chassis.

16.3.3.5 Pulse Divider

The Pulse Divider accepts 10-cps pulses from the Timing Unit and, after scaling the pulse rate down by an adjustable ratio, furnishes trigger and sample register signals to the Accumulators by way of the Timing Unit and delivers a signal to the Readout Command Unit.

The input pulses to the Pulse Divider drive a Schmitt trigger circuit for pulse standardization, as seen in Fig. 16.10. The output pulses are then fed to a group of two decimal-scalers and three binary-scalers

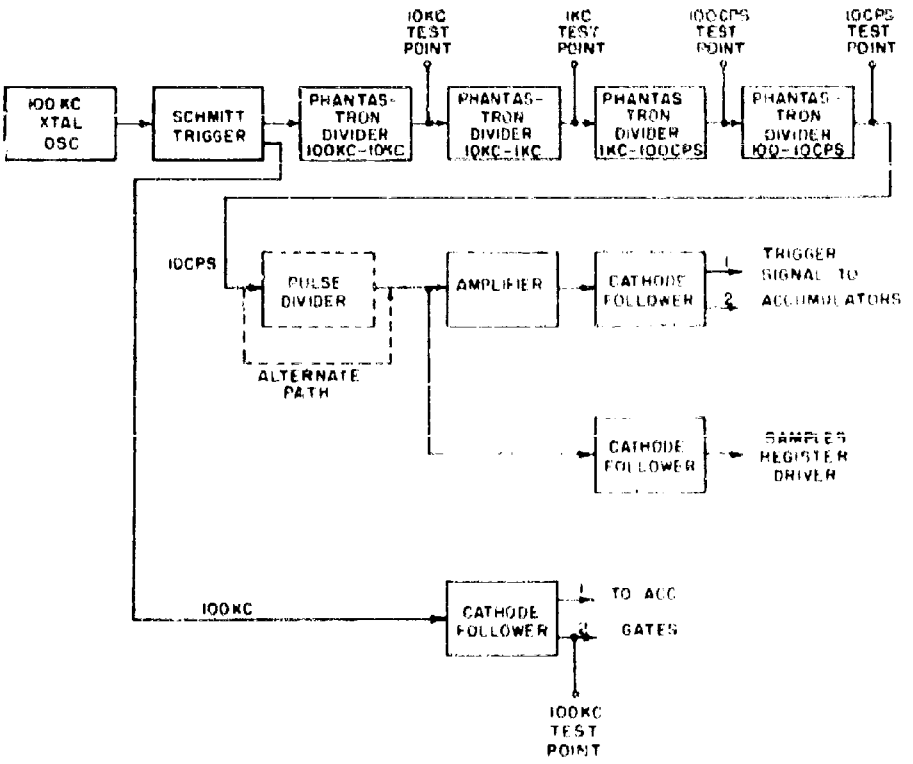

Fig. 16.9 Block diagram of timing unit

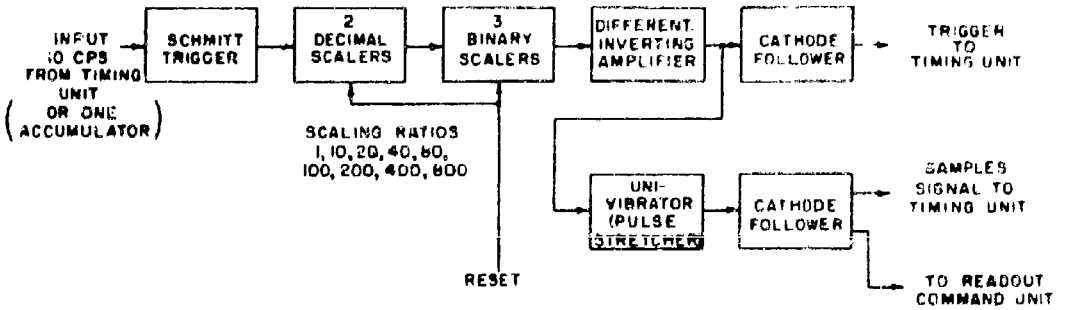

Fig. 16.10 Block diagram of pulse divider

which may be switched in various combinations to provide scaling ratios of 1, 10, 20, 40, 80, 100, 200, 400, and 800. A manual RESET button is provided to return the scalers to their zero positions before the start of each run. The output pulses of the scalers are fed to a pulse-inverting amplifier. One output of this amplifier passes signals to a cathode follower, the output of which is used as the trigger signal for the Accumulators. A second output of the pulse-inverting amplifier drives a univibrator which is used as a pulse-stretcher. The output of the univibrator goes through a cathode follower, the output of which is used as a driving signal for the Accumulator sample register drivers and for the Readout Command Unit. A relay in the input circuit of the Pulse Divider, ahead of the Schmitt trigger circuit, keeps the series input capacitor charged to prevent false counts during operation of the equipment. These false counts can otherwise arise as a result of capacitor charging and discharging pulses.

16.3.3.6 Servo Voltmeters M3 and M4

The output Moseley servo voltmeters M3 and M4 (in Fig. 16.1, page 81) are the same as the two used in connection with the multiplying potentiometers except that Coleman Digitizers and their associated equipment replace the cable-pulley mechanisms.

16.3.3.7 Coleman Digitizers*

The Coleman Digitizer is an electromechanical means of converting an analog shaft position into a discrete electrical contact setting. It is mechanically coupled to a Moseley servo voltmeter. The Digitizer is provided with three decade switches, geared together to provide a read-out signal of three-place accuracy. A dual brush system and interconnected relays are utilized on each decade switch to insure that the correct number will be read out during each sample period. The dual brush system

* The Digitizer is manufactured by the Coleman Engineering Company, Inc., 6040 Jefferson Blvd., Los Angeles 16, Calif. The basic unit includes decade switches, brushes, brush-lifting solenoids, relay K1, arc suppression diodes, 47-ohm resistor, and connection plugs. The additional relays, diodes, resistors, etc., are assembled on a chassis along with the Digitizer by F.L. Moseley Co., Pasadena, Calif.

prevents misreading which would occur in a single-brush system in which there was a possibility of the brush being open-circuited between contacts, or of the brush bridging two contacts.

Once the brush-selection action has occurred, the contacts on the Units switch are connected through associated relay contacts to the Units column and the appropriate Emitter on the IBM Summary Card Punch. Similar connections are made on the Tens and Hundreds decade switches.

The Digitizer is equipped with brush-lifting solenoids which lift the brushes except during the read-out period, thus preventing excessive wear on the sliding contacts. The brush-lifting solenoids are under the control of the Readout Control Unit. The Digitizers may be used for "continuous" readout with the brush-lifting solenoids inoperative. However, this mode of operation reduces contact life and increases driving torque requirements.

Diodes are incorporated in the circuit for arc suppression and to prevent interaction between power sources for the Digitizer relays and sources for the IBM Summary Card Punch.

16.3.3.8 Rectifier Readout Unit

The Rectifier Readout Unit permits the IBM power supply to energize the punch magnets in series with the Digitizer brushes and contacts when the brush-retracting solenoids are de-energized for readout. The contacts for each decade are connected to the IBM emitter leads. The dual brushes for each decade are connected to the proper IBM column, and brush-selection for each decade is independently relay-controlled. Power for operation of these brush selection relays is provided by internal rectifiers. Blocking diodes on the emitter lead connections prevent the internal relay power from interfering with IBM operation: diodes on the relay connections prevent IBM power from interfering with relay operation. *

* "Instruction and Operating Supplement for Moseley Rectifier Readout Unit and Moseley Readout Control Unit for IBM Readout with Model 20C Voltmeter," F.L. Moseley Co., Pasadena, Calif. This reference displays circuit diagrams and has a more complete description of the operation of this unit.



16.3.3.9 IBM 523 Summary Card Punch

Output Section B of the equipment operates into the IBM 523 Summary Card Punch. The Card Punch is a standard unit to which has been attached a 10-column error detector and an offset stacker. The 10-column error detector operates to detect any cards which are in error because of missed or multiple punches in a column. Any of ten columns may be selected by plug-board connections before a run. These "error" cards are offset in the stacking process so that they may be withdrawn from the deck and the appropriate correction made. The offset stacker allows the equipment to continue to operate during a data run without shut-down resulting when an error is detected.

The Summary Card Punch is under the direct control of the Readout Control Unit. Auxiliary units which feed information to the Summary Card Punch or take information from it to perform control operations are the Rectifier Readout Units, Card Dater, and Card Sequencer.

16.3.4 Control Sections

16.3.4.1 Automatic Stop Control

The Automatic Stop Control (Fig. 16.11) permits selective stopping control of the four paper transport drive motors and also provides relay power for the control relays of the Card Sequencer and the Pulse Divider; relay power for control relays in the Accumulators is supplied on an operational basis. Starting is accomplished by a local or a remote push-button switch which closes a power control relay. One or both of the reader drive motors may be started in this manner. A manual switch is also provided for stopping the motors connected to the power control relay.

The automatic stop control function is accomplished by current flow through two fingers which ride along the edge of the paper tape in each of the reader channels. A small spot of conductive ink is applied along the edge of the paper at the appropriate distance from the end of the record. When the spot moves under the fingers, the power control relay is opened and all the drive motors and other equipment connected

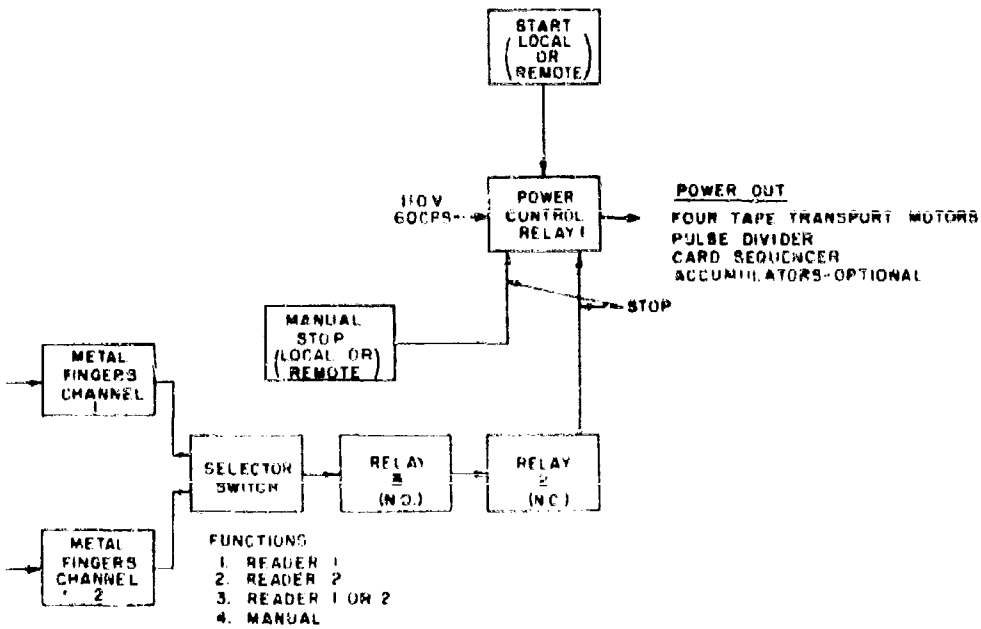

Fig. 16.11 Block diagram of automatic stop control

to the power control relay are de-energized. A selector switch allows control to be exercised by the paper tape on Channel 1, Channel 2, or by whichever tape reaches the conductive stop first.

16.3.4.2 Readout Command Unit

The Readout Command Unit is the coupling unit between the electrical pulses of the main part of the system and the relay operation required for actuating various circuits of the IBM Summary Punch. Input pulses from the pulse divider are fed to a Walkirt M1983 univibrator circuit (Fig. 16.12). The univibrator serves as a pulse-stretcher to yield a pulse long enough to subsequently operate a relay. The output of the univibrator is fed through an amplifier to a relay. The contacts of the relay close a circuit to the Readout Control Unit. A DISABLE switch removes dc power from the amplifier so as to prevent operation of the relay. Normally-open terminals of a MANUAL PUNCH push-button switch are in parallel with the relay contacts to provide for manual closure of the circuit to the Readout Control Unit.

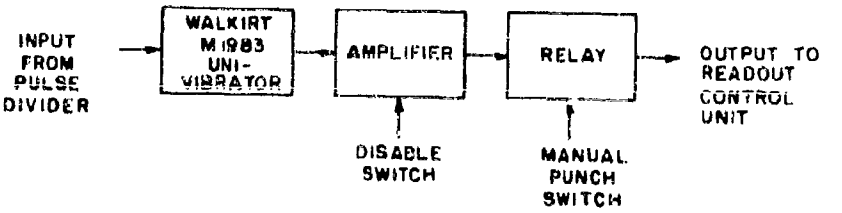

Fig. 16.12 Block diagram of readout command unit

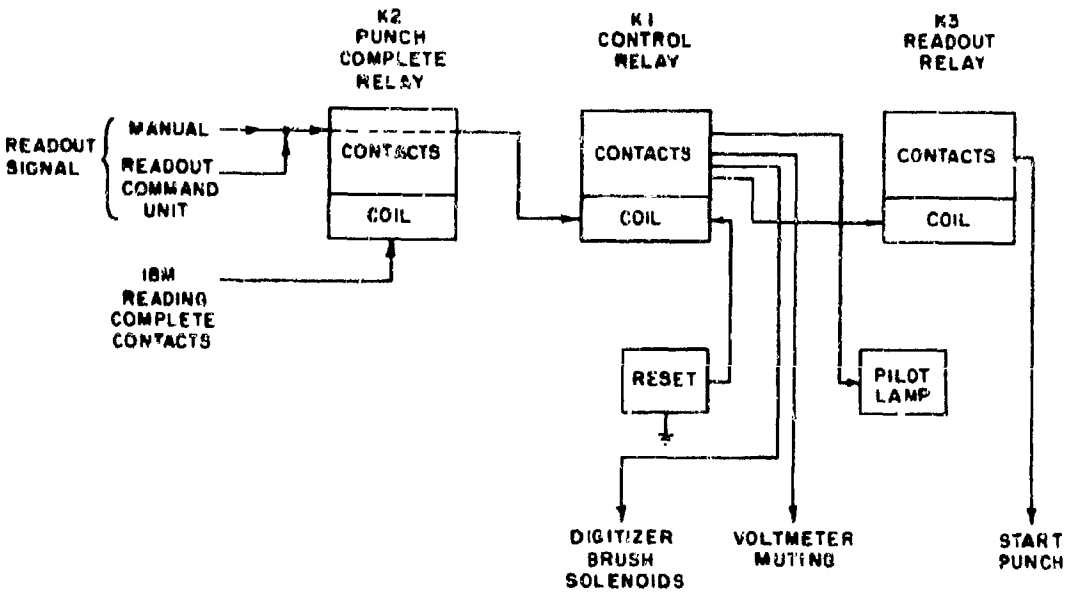

Fig. 16.13 Block diagram of readout control unit

16.3.4.3 Readout Control Unit*

The Readout Control Unit (Fig. 16.13) operates upon signal from the Readout Command Unit or by closing the Manual Readout switch. The readout signal causes relay operation which (a) mutes the Moseley voltmeters by shorting one phase of their drive motors, (b) passes a Start Punch signal to the IBM Summary Punch, (c) turns off the pilot lamp, and (d) de-energizes the Digitizer brush-retracting solenoids permitting the brushes to make contact. Upon completion of the punching cycle, the IBM unit returns a Reading Complete signal which resets the Readout Control Unit to its ready-to-read condition. A series capacitor in the readout circuit prevents the IBM unit from recycling until another readout signal is received. A manual RESET button is provided which also returns the Readout Control Unit to its ready-to-read condition.

16.3.4.4 Card Sequencer

The Card Sequencer operates with the IBM Summary Card Punch to place sequential numbers on the IBM cards. As each card is punched, contacts in the Card Punch close and, in turn, cause rotary solenoids in the Card Sequencer to advance one position. A MANUAL ADVANCE button is also provided on the Card Sequencer panel. The action of the Card Sequencer is stopped at the end of a run of data by the Automatic Stop Control. A RESET button is provided which operates appropriate relays to cause the rotary solenoid contacts to return to their zero positions at the beginning of each run.

16.3.4.5 Card Dater

The Card Dater serves the purpose of punching "fixed" information on the IBM cards. This information includes the number of the month, the day of the month, the year (last numeral only), the run number, and the position number of the instrument from which the original record was made. Selector switches on the dater cause the required "fixed" information to be punched in all IBM cards associated with the analysis of a particular run of data. Each selector switch has an OFF position for use when

* Manufactured by F.L. Moseley Co., Pasadena, Calif.

a set of cards are run through two or more times for accumulating various data associated with a particular experimental run.

16.3.5 Test Facilities

16.3.5.1 Accumulator Calibrator

The Accumulator Calibrator has two functions: (a) to furnish standard voltages for calibrating the counts per sample of the Accumulator, and (b) to provide a means of adjusting and checking the nonlinear potentiometer used in the data linearization function. A block diagram is given in Fig. 16.14.

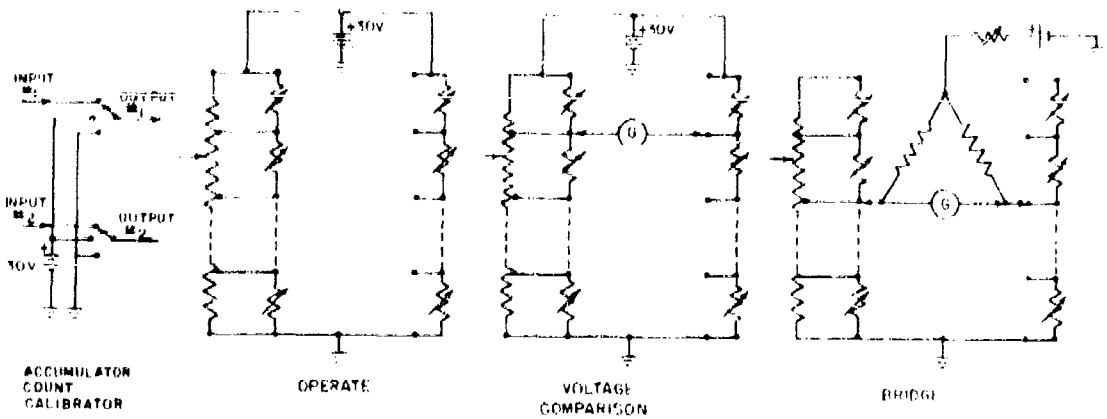

Fig. 16.14 Block diagram of accumulator calibrator unit

The accumulator calibration function is controlled by a 3-way toggle switch. In the OPERATE or center position, the input signal is connected directly through to the cathode follower input to the Accumulator. In the CAL (30 VOLTS) position, the switch removes the input and inserts 30 volts dc. This voltage is derived from a 250-volt regulated dc supply across which is connected low temperature coefficient voltage-divider resistors. A 10K, 5-turn, potentiometer provides for precise adjustment of the voltage. The Accumulator is adjusted for 500 counts per sample. In the GROUND position, the input signal is disconnected and the cathode follower input is grounded. The Accumulator is adjusted to 50 counts per sample. Two identical calibration circuits are provided for each of the two accumulators.

The section of the calibration panel associated with the nonlinear potentiometer has three functions: (a) OPERATE, (b) VOLTAGE COMPARISON, and (c) BRIDGE. These functions are selected by a 3-position rotary switch. A multiposition selector switch permits selection of any of fifteen points along the variable resistor string that shunts the potentiometer. At the same time, this switch connects to the appropriate point along a standard reference resistance voltage divider. In the OPERATE position, the tapped potentiometer with its shunts and the reference resistor string are connected in parallel, and a voltage of 30 volts is connected across the parallel combination. The voltage comparison and bridge circuits are inactivated.

In the VOLTAGE COMPARISON connection, approximately 30 volts is applied across the parallel combination of the tapped potentiometer with its shunts and the standard resistance string. A 25-0-25 microampere meter is connected between comparable resistance points on the tapped potentiometer with its shunting resistors and the standard resistance string. A meter shunt is provided to minimize damage to the microammeter if the shunts on the potentiometer are improperly adjusted or if the cable connections are disconnected. In use, the Selector switch moves the metering circuit from one position to the next. The VOLTAGE COMPARISON circuit is used as a quick check on the adjustment of the tapped potentiometer shunt adjustments.

In the BRIDGE connection, the tapped potentiometer with its shunts and the standard resistance string are connected as the adjacent arms of a conventional Wheatstone bridge. The 25-0-25 microammeter serves as a balance detector. The selector switch compares the resistance of sections of the tapped potentiometer with its shunts to the standard resistance string. The source voltage is increased in steps as more resistance is added to the two arms of the bridge by the selector switch in order to maintain approximately the same sensitivity of the detector microammeter.

A switch on the back of the panel is provided so that in the OFF position the reference string of resistors is disconnected from the

remainder of the circuit. This permists the adjustment of these resistors with an external bridge.

16.3.5.2 Electronic Switch and Sweep Circuits

The Electronic Switch and Sweep Circuits (Fig. 16.15), followed by a cathode-ray oscillograph, are used for monitoring the waveform of the input signals to the Tape Readers after the signals ha· passed through the photomultipliers and preamplifiers. A selector switch is provided so that the waveforms of other circuits of the tape readers may also be monitored. The Electronic Switch and the Sweep Circuits are synchronized to the line frequency (60 cps), as is the mirror drive motor in the Tape Reader.

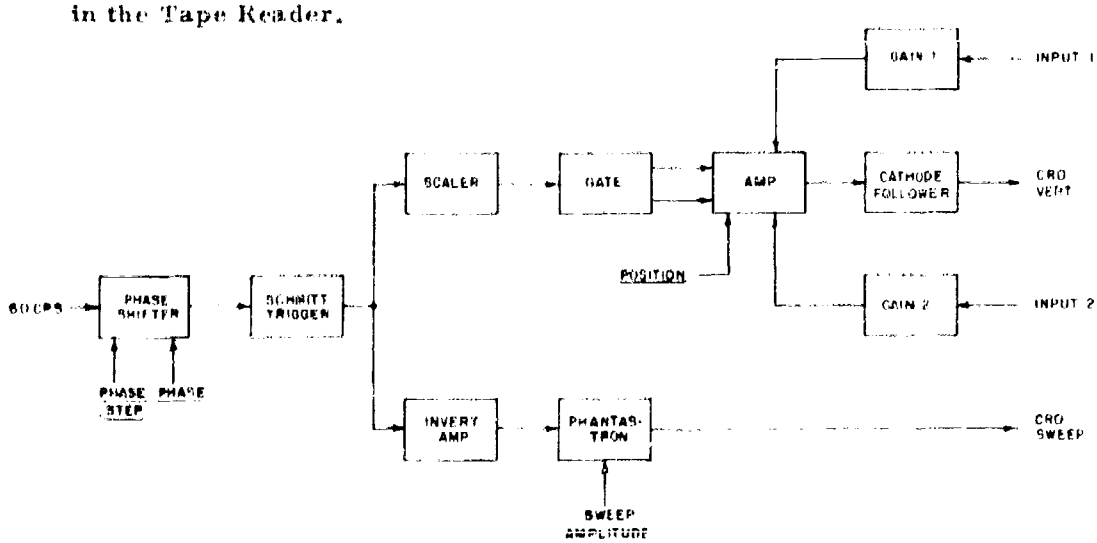

Fig. 16.15 Block diagram of electronic switch and sweep circuits

The 60-cps input signal is fed to a phase shifter to permit compensation for phase lags in the tape reading system and to allow for some horizontal adjustment of the trace on the face of the viewing tube. A PHASE STEP control is provided which makes it possible to place the sweep in step with the four-pole motor driving the mirror. The output of the phase shifter is fed to a Schmitt trigger which yields a 60-cps square-wave output. This output drives both the electronic switch and the sweep portions of the circuit.

The electronic switch is essentially a gated amplifier which alternately yields an output from each of two input channels. Gain controls are provided for each input. A POSITION control is provided so that the two inputs can be separated in a vertical sense on the cathode-ray tube screen. The output of the gated amplifier drives a cathode follower which in turn is connected to the vertical input terminals of a cathode-ray oscillograph.

The sweep section utilizes a phantastron sweep circuit. Adjustments are provided for trigger level, amplitude, and frequency. The output is fed to the horizontal terminals of the cathode-ray oscillograph.

16.3.6 Auxiliaries

The IBM 024 Manual Card Punch is a standard manual key punch and is used to correct cards with missed punches or to remake double-punched or damaged cards. With the use of a program card, it is possible to duplicate entire cards or any portion of a card and to manually punch any portion of a card.

16.4 Discussion of Errors in Equipment

16.4.1 Paper Transport

The Esterline-Angus paper transport mechanism which drives the paper record in the Tape Reader is subject to some lateral position uncertainty. This lateral shift results both from end-play in the drive roller-bearing assembly and the shift of the paper record with respect to the drive roller. The shift of the paper record is insignificant for virgin paper, but after the paper has been run through a recorder and then past the Tape Reader head a few times the drive holes are enlarged until there is a possibility of lateral shift. The lateral shift of the drive roller and paper record is caused primarily by unequal stretching of the paper and varies in an unpredictable manner along the length of the record. The shifting is not random in nature, but it is erratic. The mechanical action causing the lateral shifts would generally cause both the drive roller and the paper to move in the same direction and their combined effects in producing an error would be additive. The error caused

by both of these lateral shifts is less than ± 0.5 percent of full scale.

16.4.2 Reader Unit

The Reader Unit may have errors resulting from misalignment of the rotating mirror assembly, from inaccuracies in full-scale calibration of the reader, from small variations in the width of the inked trace, from imperfect action of the clamped RC integrator, and from nonlinearities in the electronic circuits. The maximum error from these causes is ± 0.25 percent of full scale.

16.4.3 Moseley Servo Voltmeters

The manufacturer's stated accuracy of these units is ± 0.25 percent of full scale.

16.4.4 Attenuators

Attenuators are required for some operations between the Tape Reader and the input Moseley servo voltmeters to permit full-scale calibration of the equipment. The attenuators are relatively low-precision potentiometers. To keep the resolution high, a low resistance unit is ordinarily used in series with a higher resistance potentiometer and vernier adjustments are made with the aid of a Moseley voltmeter and, since resolution is not a significant factor, the error associated with the attenuators is essentially that of the Moseley voltmeters or ± 0.25 percent of full scale.

16.4.5 Linearizing Potentiometers

The resistance vs. station function of the linearizing potentiometers is adjusted so that the combination of the nonlinear velocity transducer, Moseley servo voltmeter, and the linearizing potentiometer produces a linear relation between velocity on the input record and voltage on the output of the linearizing potentiometer. As is typical of any nonlinear device, a simple statement of the error introduced by the device is not feasible. Some of the factors which, in this case, contribute to errors are : inaccuracies in matching curved functions by segmental approximations, inaccuracies in linear interpolation procedures, calibration errors and temperature effects. Other factors, contributory in

nature and thus not directly chargeable to the linearizing potentiometers but which nevertheless must be considered in relation to the potentiometer errors, are as follows: the effects of lateral motion of the paper record, variations in inked line width and other imperfections in the inked trace, and inaccuracies in the calibration of the velocity transducers with which the original record is made.

The calibration of the velocity transducers is furnished as a group of points showing the actual velocity and the corresponding deflection on the paper record. The calibration represents the best average of five transducers. Intermediate points are derived by linear interpolation. The change of slope of the calibration curve is gradual enough, and the calibration points close enough together, so that there is very little error in the linear interpolation procedure. In fact, the points may be interpolated with greater precision than that inherent in the calibration itself. The tapped linearizing potentiometer has 20 taps plus the end terminals with positions for 22 resistors, including the "offset" resistor between the lower end terminal of the potentiometer and ground. It is necessary to use only 15 separate resistors to match the required nonlinear curve, a result of near linearity in certain regions of the curve. The adjustment of the resistors to the required nonlinear variation can be done with excellent precision. There is little error resulting from the straight line resistance change between tap points.

The "offset" voltage is the voltage introduced to expand the input signal variations on the paper tape, which occupy approximately 90 percent of the record, to full-scale variations in the output circuits. The size of this error is discussed along with other errors of a lateral translational nature.

The errors resulting from calibration appear in two ways, representing two separate steps in the calibration procedures: (a) errors in adjusting the resistors to their correct values, and (b) errors in adjusting the "offset" voltage.

The value of each resistor in the comparison string is adjusted with a precision bridge. The resistances of the sections of the nonlinear

potentiometer are then adjusted by comparison to the comparison string of resistors by means of a bridge circuit. The "offset" resistor is adjusted first, then the first section of the nonlinear potentiometer, and so on. The circuit is such that the resistors which have previously been adjusted are part of the total resistance. This technique avoids cumulative errors which would result if each section of the linearizing potentiometer was adjusted separately. The error in resistance adjustment is estimated to be not greater than ± 0.15 percent.

All of the critical resistors associated with the linearizing potentiometer and the comparison string are made of the same type of low temperature coefficient resistance wire (20 parts per million per °C). Thus, changes of resistance resulting from temperature variations have a very slight effect in producing errors.

Several of the remaining potential sources of error may be grouped together in terms of their effect. These are lateral movement of the paper transport, lateral movement of the paper record with respect to its transport mechanism, varying width of the inked trace, certain types of smudges and smears on the paper tape, and improper adjustment of the "offset" voltage. All of these may be resolved as having substantially the same effect, equivalent to uncertainty in the amplitude of the input trace. Because of the nonlinearities, the error introduced is quite different for the same value of lateral translation when it occurs at different amplitudes of velocity. For example, assume a lateral translation of the record of 0.5 percent of full scale (one-fourth of a division on the paper tape). If this translation occurs at 11 m/sec, the error introduced is about ± 2.1 percent of full scale. If it occurs at 5 m/sec, the error is about ± 1.7 percent of full scale. If the 0.5-percent translation occurs at 1 m/sec, the error is only about ± 0.75 percent of full scale. Thus, the error decreases for velocities less than the full-scale value. This behavior is in distinct contrast with the usual errors in linear systems which increase as the amplitude of the variation of the input quantity decreases. It is this difference in behavior that makes the contribution of the nonlinear device to the total error of the system difficult to

express.

The graph in Fig. 16.16 and the tabulated values in Table 16.1 show how the measured output voltage from the linearizing potentiometer conforms to the computed values. The data show both positive and negative differences. The maximum difference is 2.14 percent of full scale, which represents a velocity uncertainty of approximately 3 percent. The data on which the graph and table are based were taken after careful calibration of the two Moseley servo voltmeters involved in the measurements, adjustment of the resistance of the linearizing potentiometer, and careful setting of the supply voltages. The data includes the ± 0.25 percent possible error of the Moseley servo voltmeters, which would make only a slight contribution to the maximum total error. It is felt that the data gives a reasonable guide to the magnitude of error to be expected in processing velocity information through the linearizing potentiometers.

16.4.6 Cathode Followers

The Cathode Followers exhibit extremely linear characteristics, and nonlinearities produce an insignificant amount of error. There is some drift associated with the circuit, primarily caused by power supply variations which are essentially random in nature. The maximum error resulting from the drift is ± 0.5 percent of full scale.

16.4.7 Accumulators

The function of the Accumulators is to convert samples of the amplitude of the slowly varying input signal into bursts of 100-kc pulses such that the number of 100-kc pulses is proportional to the amplitude of the sample. The circuits are arranged so that the Accumulators may be calibrated for 50 counts per sample for zero input voltage and 500 counts per sample for full-scale input voltage. Since a given input voltage sample may require a fractional 100-kc pulse in addition to an integral number, there is an estimated possibility of error from this cause of ± 1 pulse per burst. This error is significant only if the total number of pulses in a burst is at the edge of a class interval window in the Pulse Distributor, that is, 25 or 26, 50 or 51, etc., 100-kc pulses for a

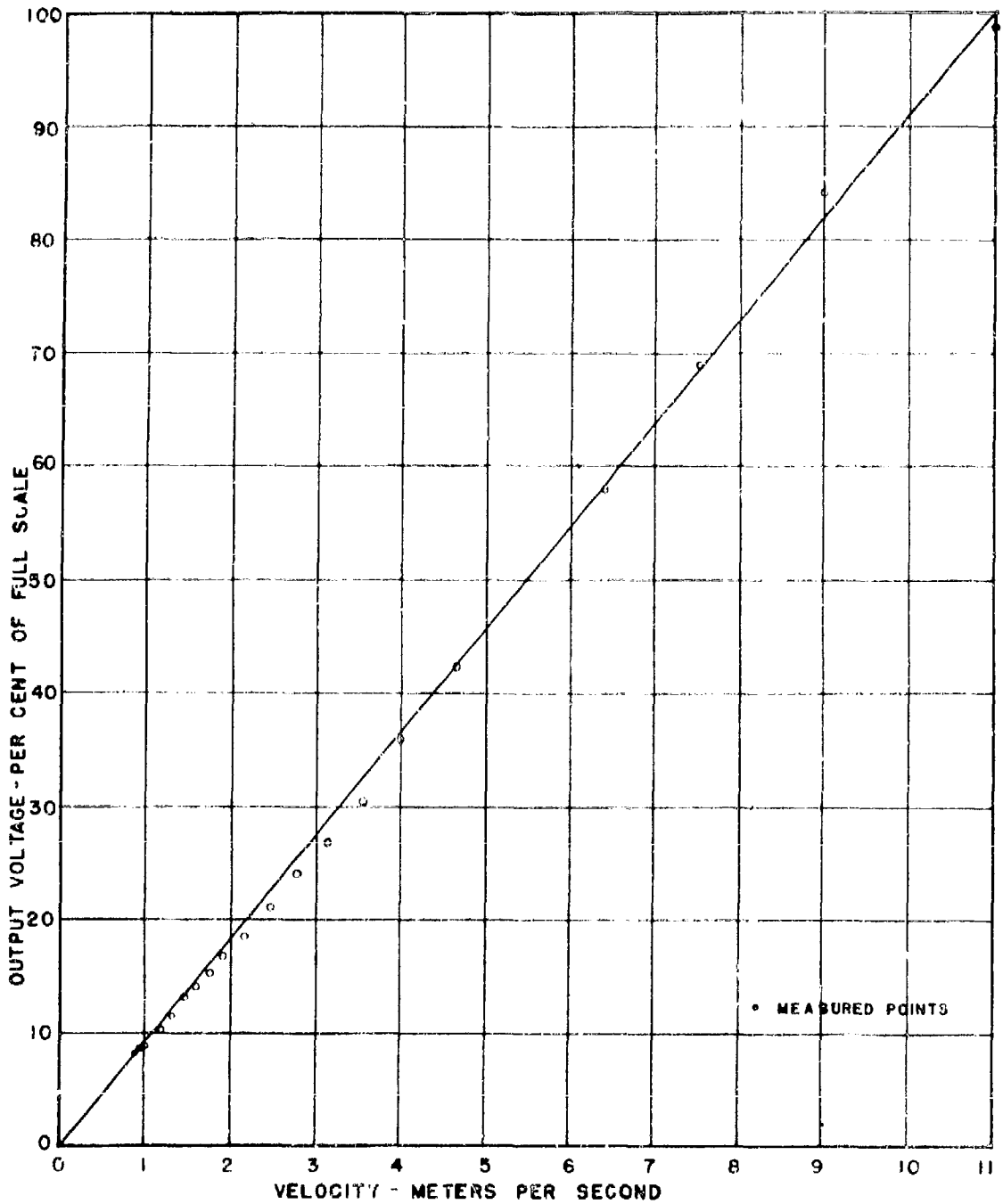

Fig. 16.16 Conformance of linearizing potentiometers

TABLE 16.1 Conformance of linearizing potentiometers

Velocity (m/sec)	Output Voltage (Percent of full scale)		
v	Calculated E_o	Measured E_o'	Difference $E_o - E_o'$
11.000	99.98	98.83	1.15
9.019	81.97	84.11	-2.14
7.548	68.59	68.81	-0.22
6.382	57.99	57.64	0.35
5.444	49.46	48.97	0.49
4.684	42.55	42.31	0.24
4.032	36.62	36.10	0.52
3.586	32.57	30.50	2.07
3.151	28.61	26.86	1.75
2.796	25.38	24.01	1.37
2.484	22.54	21.01	1.53
2.172	19.70	18.47	1.23
1.932	17.52	16.90	0.62
1.781	16.15	15.32	0.83
1.629	14.78	14.11	0.67
1.478	13.41	12.97	0.44
1.326	12.04	11.58	0.46
1.175	10.67	10.21	0.46
1.024	9.30	8.90	0.40
0.958	8.70	8.61	0.09
0.909	8.26	8.16	0.10

division ratio of 25. Under this condition, the absence or excess of a pulse can cause the burst to be recorded in the wrong class interval. For other values of pulses per burst, the final class interval is not affected. A second error resulting from this uncertainty of one pulse is in the total 100-kc pulse count. This is not a significant error. There is a slight drift or uncertainty in the width of the gate. Nonlinearities do not contribute appreciably to the errors. The maximum error in each sample of the Accumulators is estimated to be not greater than ± 0.3 percent of full scale.

16.4.8 Pulse Distributors

The Pulse Distributors include pulse divider, scaling, register, and associated circuits. Once these circuits are adjusted to perform their functions there is no error inherent in their action. Improper adjustment of these circuits will cause misbehavior catastrophic in nature which is readily apparent to the operator. The error in the Pulse Distributors, with proper circuit adjustment, is zero.

16.4.9 Digitizers

The Coleman Digitizers, with their dual brush arrangement, are not subject to error in the Tens and Hundreds decades even with some gearing backlash. There is a possibility of some uncertainty in the Units decade resulting from backlash and uncertainty of brush contact position. The error arising from this cause is estimated to be not greater than ± 1 contact position on the Units decade. A possible source of systematic error is in misorientation of the Digitizer shaft in respect to the Moseley servo voltmeter. The error from this cause is negligible since adjustments can readily be made and with precision. The total error contributed by the Digitizers is sensibly that due to uncertainty of the Units decade, or not greater than ± 0.1 percent of full scale.

16.4.10 IBM Type 523 Summary Card Punch

The Summary Card Punch is not subject to errors except those caused by malfunctioning or misadjustment of the equipment. These types of errors are ordinarily evident to the operator and must be corrected before proceeding with the use of the punch. The errors arising during normal operation are zero.

16.4.11 Other Errors

As is common with most equipment composed of many parts, some of which require critical adjustments, there are occasional errors unpredictable in nature and essentially random in character. These errors do not lend themselves to any numerical specifications. They are, however, extremely small in value. An occasional error is caused by a break or light spot in the inked record. The result is that a full-scale reading is

indicated. This type of error is usually detected by the operators because of the rapid acceleration of the Moseley voltmeter as it drives toward the full-scale value and back again to the value of the next correct sample of the record. Malfunctioning of various units of the equipment cause an occasional missed or erroneous punch. Cards with missed punches are sorted out by the error detector attachment and the missed punches are supplied. The procedure used for correcting error cards is discussed later. Erroneous punches resulting from causes other than those already discussed in respect to individual units are estimated to be very few. Therefore, no effort is made to estimate their contribution to the total expected error since the contribution should be insignificant.

16.4.12 Errors in Mean Value and Linearizing Procedures

Typical operations with the equipment include those of producing data after linearizing the velocity records and producing data from the azimuth and elevation angle records. In all cases the mean values, distribution of amplitudes of samples (histograms), and punched-card records are of interest. Tables 16.2 and 16.3 show the major items of equipment involved in all of these operations. Not shown in the tables are auxiliary equipment not entering into error estimates. The maximum error estimate for each of the operations is computed on the basis of the square root of the sum of the squares of the individual contributions, except that the error introduced by the linearizing potentiometer is not included in the maximum error figures.

16.4.13 Correction of Error Cards

As discussed previously, the "error" cards are sorted out by the error detector attachment, corrected, and then returned to their proper place in a group of cards. In the case of doubly-punched columns, the correct values are determined by inspection of the cards immediately preceding and following the error card. A new card, carrying the correct information, is then prepared. In the case of missed punches, the missing information is supplied by linear interpolation, again by reference to the values on the bracketing cards. This interpolation procedure

TABLE 16.2 Errors in velocity linearizing operation

Major Equipment Involved and Maximum Estimated Errors		
Mean Values	Histograms	Punching IBM Cards
Paper Transport	Paper Transport	Paper Transport
Tape Reader	Tape Reader	Tape Reader
Attenuator	Attenuator	Attenuator
Moseley Voltmeter	Moseley Voltmeter	Moseley Voltmeter
Linearizing Pot.	Linearizing Pot.	Linearizing Pot.
Cathode Follower	Cathode Follower	Coleman Digitizer
Accumulator	Accumulator	523 Punch
	Pulse Distributor	
*Max. error = ±0.88%	*Max. error = ±0.88%	*Max. error = ±0.71%

*Not including linearizing potentiometer error. See text.

TABLE 16.3 Errors in azimuth and elevation angle procedures

Major Equipment Involved and Maximum Estimated Errors		
Mean Values	Histograms	Punching IBM Cards
Paper Transport	Paper Transport	Paper Transport
Tape Reader	Tape Reader	Tape Reader
Attenuator	Attenuator	Attenuator
Cathode Follower	Cathode Follower	Moseley Voltmeter
Accumulator	Accumulator	Coleman Digitizer
	Pulse Distributor	523 Punch
Max. error = ±0.85%	Max. error = ±0.85%	Max. error = ±0.70%

is applied to missing punches in the Hundreds and Tens columns only. If a missed punch occurs in the Units column, it is supplied as a "five" since the units data vary so rapidly that interpolation procedures are inapplicable. Also, the data in this column represent the least significant figure.

16.5 Conclusions

The success of any data-processing system must be measured by its performance both in ease of operation and long-term reliability and accuracy. The use of the previously described plug-in circuit elements and special calibrating circuits and techniques made the problem setups and operation quite simple. Special blank forms have been prepared and are used by the operator to insure the recording of all scale factors and machine constants pertinent to the problem at hand.

The long-term reliability of the system can best be measured in terms of actual problem-running time against unscheduled down-time. In over 2000 hours of problem operation there were less than 100 hours of unscheduled down-time. A large share of the unscheduled down-time can be charged to the digitizer punch card output section. The contacts of the digitizer became worn with use giving rise to missed punches on the cards. (The use of the missing-punch detector and off-set stacker in the IBM Summary Punch permitted the detection and later correction of the cards in error without stopping a problem run.) Another cause for unscheduled down-time is the occasional jammed card in the feed mechanism of the punch-card equipment. In this case the run is lost and must be started over because the original time sequence cannot be easily re-established at an arbitrary part of a run.

In establishing a measure of accuracy for the data-processing system, one must in general assess the errors for a particular type of problem. However, there are certain general characteristics that can be discussed without reference to any particular problem.

In the linear portions of this system, the errors are expressed as a fractional part of the full-scale range of each element. The optimum use of the system would dictate full-scale use of all the elements making

up the system so as to minimize the relative error; but, unfortunately, the optimum condition is not always met in practice. This data-processing system is designed to operate on the analog voltage base determined by the full-scale output of the Tape Reader, and the system is internally consistent with this design parameter. If it is necessary to process records with a much restricted dynamic range, the relative errors of the analysis can become large.

There is a fundamental limitation in this data-processing system with respect to the type of multiplier and accumulator which are used. The servo multiplier as used in this system is basically a one-quadrant multiplier, which is quite consistent with the requirements of the accumulator. (A one-quadrant multiplier means that only positive quantities may be used in the multiplication process.) An artifice may be used to get four-quadrant action and still maintain the proper input for the accumulator. However, the artifice is used at the expense of accuracy. A positive number may be added to each of the variables entering into the multiplication process so that the transformed variables are now always positive. At the conclusion of the multiplication, the contribution to the product which has been made by the additive constants may be subtracted. As can be seen, a large error can be introduced if the product of the original variables is small and is obtained as the difference of two numbers of nearly the same magnitude.

The primary objective throughout the design of this system has been to obtain elements and modes of operation with accuracies at least consistent with the accuracy of the data to be processed. Many of the elements of the system are quite conventional as well as the techniques which join the individual elements into the data-processing system. However, those elements which are a little different, and have a potentially wider application, have been treated in greater detail elsewhere.[1]

16.6 Appendix

The previous discussions in this report of the various circuits and their behaviors are based primarily on block diagrams of the circuits

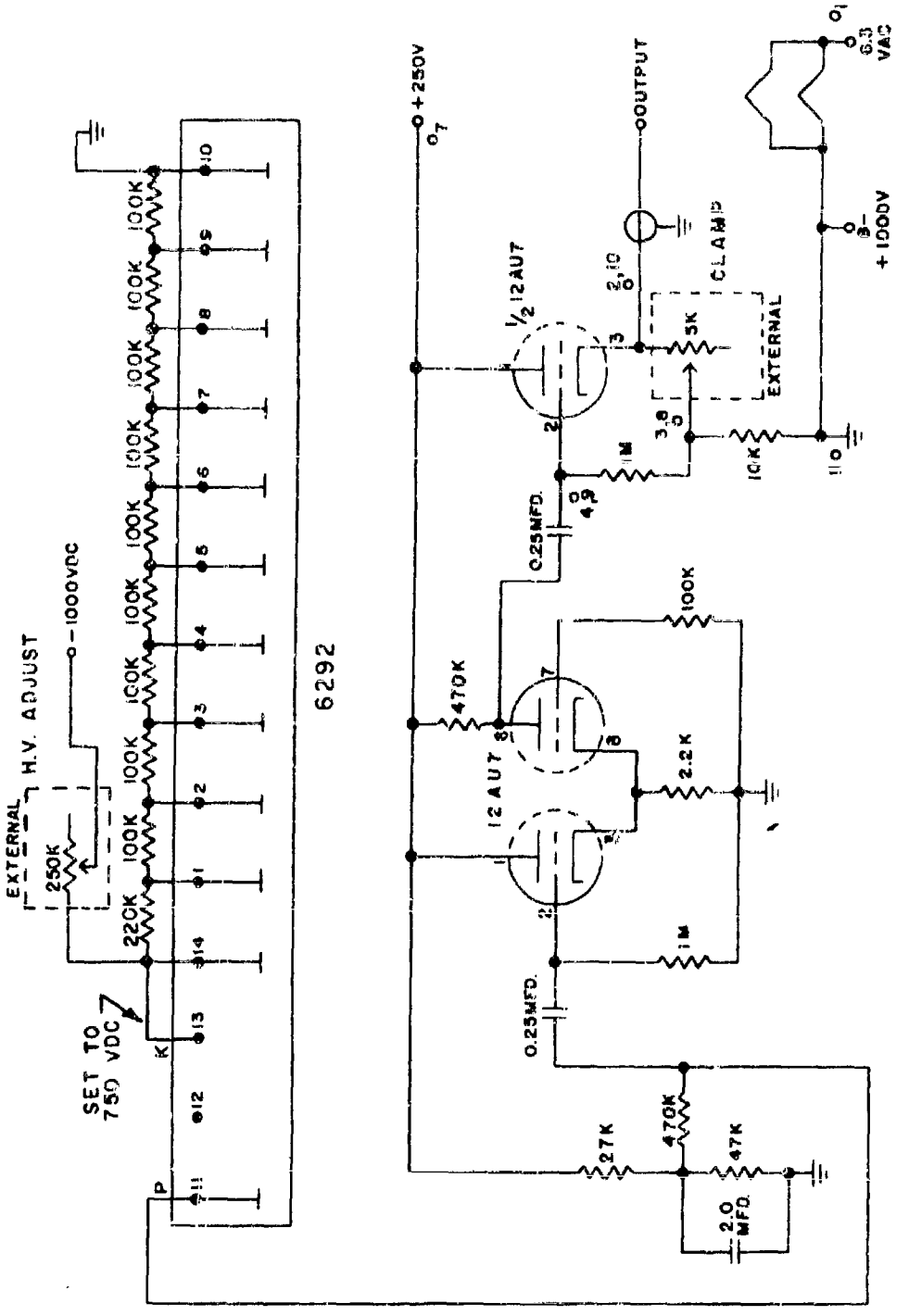

Fig. 16.17 Circuit diagram of photomultiplier head in tape reader

and, except in a few cases, little attention has been paid to the details of the electronic circuitry. One of the units, the Tape Reader, has enough unique aspects to warrant a more detailed description of its circuitry.

The Tape Reader circuits are separated into two subunits. The photomultiplier head, an integral part of the reader head, includes the photomultiplier tube and a preamplifier. A second chassis includes pulse and signal-shaping circuits, a clamped RC integrator, and a cathode follower output amplifier.

The circuit diagram of the photomultiplier head in the Reader is shown in Fig. 16.17. The output signal of the photomultiplier tube is a negative-going pulse, the duration of which corresponds to the time required for the light spot to describe its arc across the Esterline-Angus record. Superimposed on this negative-going pulse is a positive "spike" which occurs when the light spot crosses the red ink line on the record. Three time factors are important in this waveform and must be preserved for use in circuits which follow the Reader: starting time of the negative-going pulse, starting time of the positive "spike," and total duration of the negative-going pulse. The output signal of the photomultiplier tube is then amplified by a cathode follower-grounded grid amplifier after which it is fed to an adjustable clamp circuit. The primary function of the clamp circuit is to compensate for slightly different total path length of the light beam as the mirror rotates and for inhomogeneities in the paper, both of which would cause variations in the negative pulse amplitude. The action of the clamp is to force the pulse amplitude to be substantially constant except during the time the "spike" is superimposed on the pulse.

Block and circuit diagrams of the Tape Reader chassis, as distinguished from the preamplifier, are seen in Figs. 16.18 and 16.19. The signal from the preamplifier is fed to a grounded grid-cathode follower pulse amplifier to shape and square the pulse and remove incidental noise. The output triggers a Schmitt circuit which serves to reproduce the input waveform at a larger amplitude, but with faster rise-and-fall times. The Schmitt trigger output is differentiated and the negative

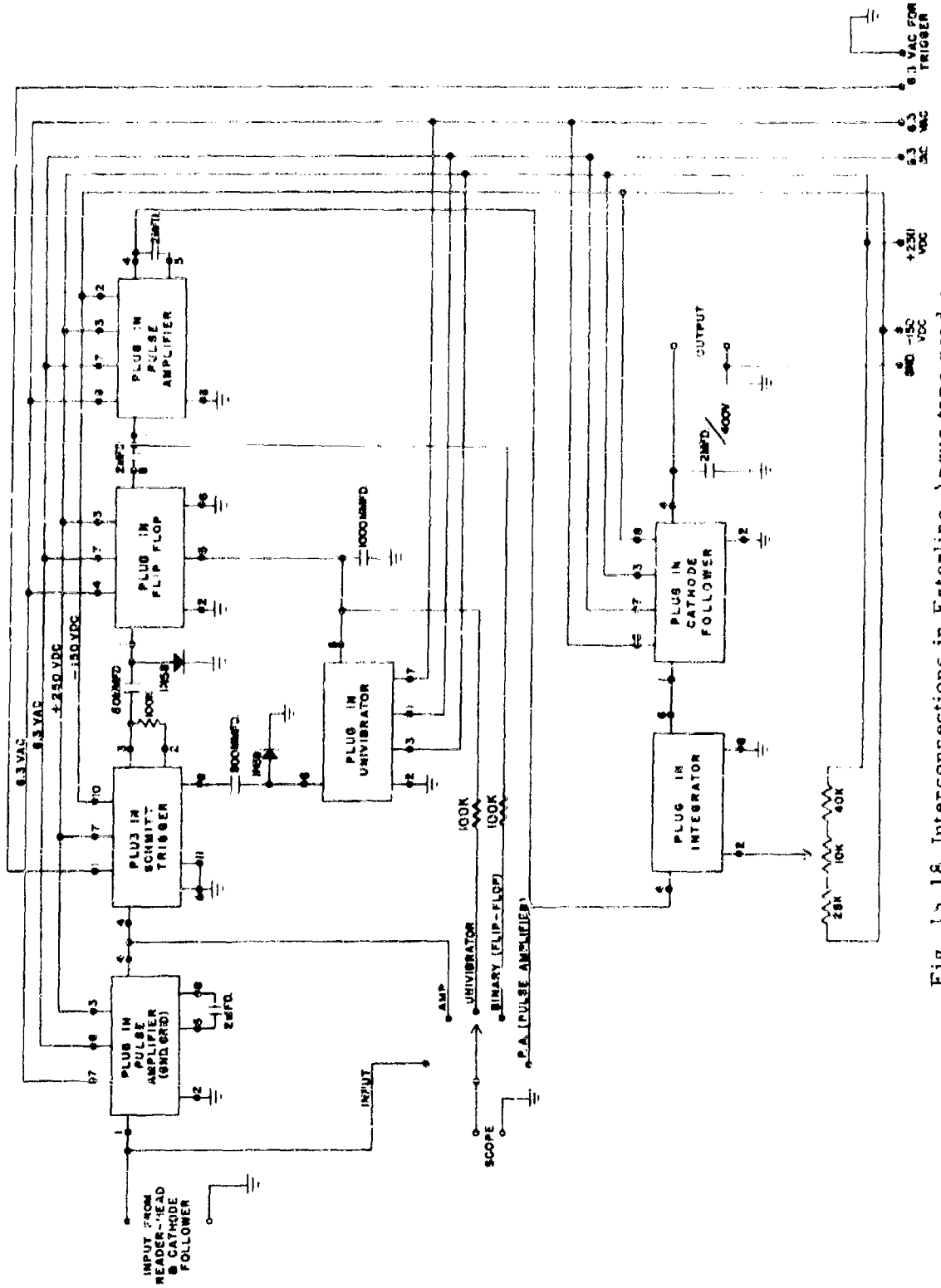

Fig. 14.18 Interconnections in Esterline-Angus tape reader

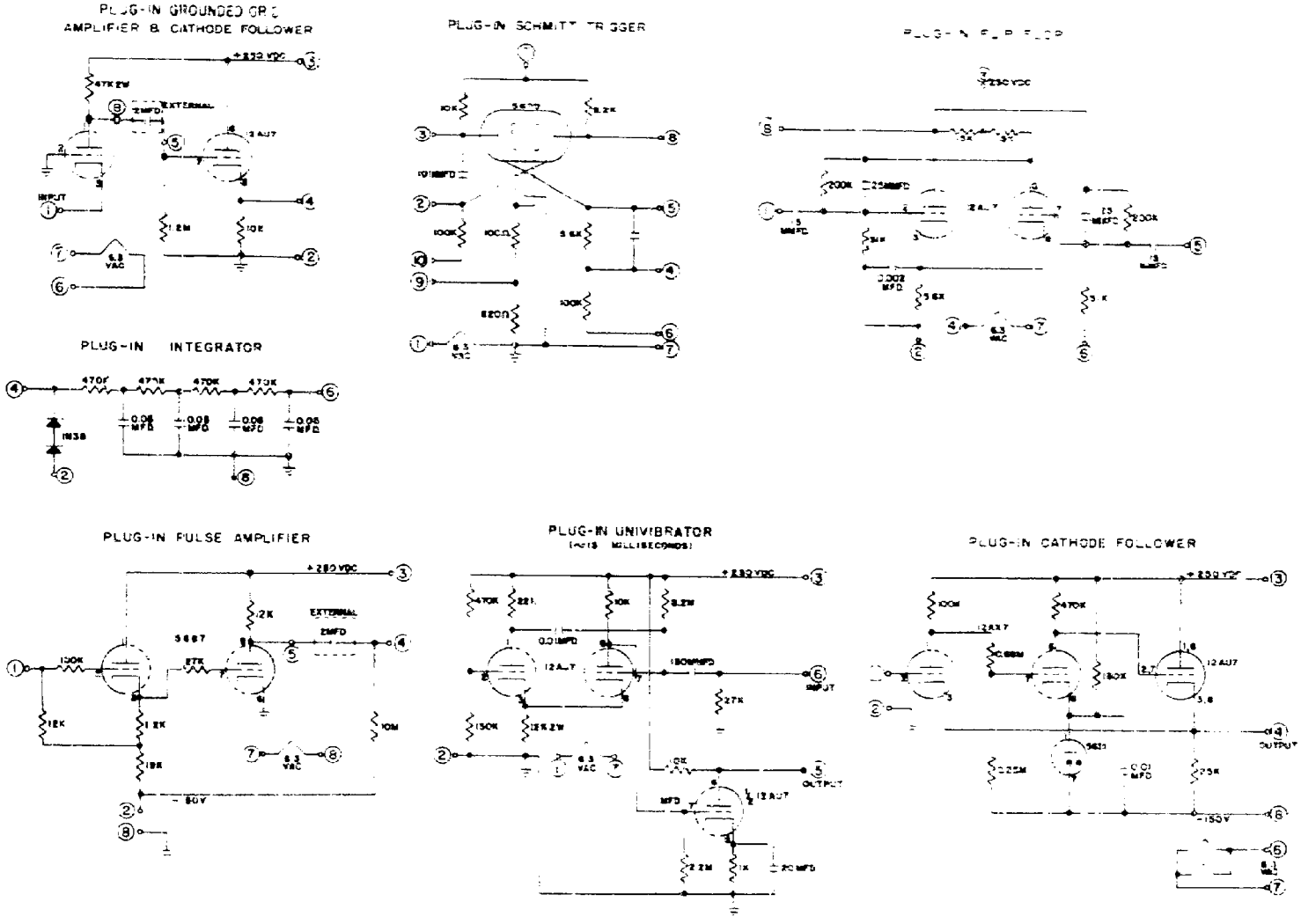

Fig. 16.19 Details of plug-in units for Esterline-Angus tape reader

pulses in the resulting wave trigger a flip-flop circuit. A second output from the Schmitt trigger is fed to a univibrator with a delay time of approximately 15 milliseconds, or slightly longer than the time required for the spot of light to cross the paper record. The output of the univibrator is differentiated and fed to the flip-flop. In normal operation the Schmitt trigger output will cause the flip-flop circuit to change state at the beginning of the pulse and again at a time corresponding to the arrival of the "spike." The univibrator circuit is used to insure that the flip-flop returns to its normal state before the next main pulse arrives from the Schmitt trigger. The univibrator has no effect if the flip-flop has returned to its normal state as a result of the action of the Schmitt trigger. The output signal of the flip-flop circuit is connected to a pulse amplifier. The pulse amplifier consists of a cathode follower input stage followed by an unbiased grounded-cathode stage. The second stage acts to clip the wave whenever it tries to go above zero volts and therefore the pulse amplifier acts as a saturating amplifier. The signal from the flip-flop is of sufficient amplitude to drive the pulse amplifier from well beyond cut-off to well into saturation. The output of the pulse amplifier is a pulse of constant amplitude and of pulse width proportional to the position of the ink trace from the reference line of the record, or, in electrical terms, of pulse width corresponding to the period of time between the beginning of the output pulse from the photomultiplier and the appearance of the spike. The pulse amplifier feeds into a clamped RC integrator. The integrator is similar to a multi-section RC filter and fills in between successive pulses. The time constant is such there is practically no tendency to flatten the peaks or raise the valleys. The clamp circuit on the input to the RC filter sets the dc level of the output and is usually adjusted to give a zero-output voltage for a zero deflection of the Esterline-Angus trace.

ACKNOWLEDGEMENTS

As in any project of this magnitude, several people have made major contributions to its success. The authors wish to acknowledge the contributions made by: Dr. A. R. Kassander, Jr., * in the initial design of the mechanical reading head; Dr. W. H. Evans, ** in the design of the Tape Reader and Pulse Distributor circuitry; and Mr. J. D. McMechan, *** in the design and construction of some of the auxiliaries.

In addition, the authors wish to recognize the excellent and faithful work of Messers W. G. Beran and R. D. Hall in the testing and operation of the data-processing system in its many months of operation.

* Director, Institute of Atmospheric Physics, University of Arizona, Tucson, Arizona

** Professor, Department of Electrical Engineering, University of Arizona, Tucson, Arizona

*** Instructor, Department of Electrical Engineering, Iowa State College, Ames, Iowa

REFERENCES

1. Stewart, R. M., Jr., and G. A. Richardson, "An Automatic Data-Processing Machine Operating with Esterline-Angus Paper Tape Input," Sci. Rpt. No. 1, Contract No. AF 19(604)-1042, Iowa State College, Dept. of Physics, (April 1958).

2. _____, and A. R. Kassander, Jr., "An Electronic Statistical Tabulator," Proc. Nat. Electronics Conf., Vol. 8, pp. 657-667 (1953).

3. _____, "A Description of the Iowa State College Equipment Used in the Great Plains Field Test and a Description Analysis of some of the Data Obtained," Sci. Rpt. No. 4, Contract No. AF 19(122)-440, Iowa State College, Dept. of Physics, (June 1954).

4. Moseley Equipment Manuals

   Instruction and Operating Supplement for Moseley Rectifier Readout Unit and Moseley Readout Control Unit for IBM Readout with Model 20-C Voltmeter. (Unit built to Iowa State College specs.)

   Instruction and Operating Manual for Moseley Model 20-A Voltmeter with Model 20-C Supplement. (Unit built to Iowa State College specs.)

   Instruction Manual Model 20 DC Voltmeter

5. IBM 523 Summary Card Punch Manuals

   IBM Electric Punched Card Accounting Machines. Principles of Operation, Automatic Summary Punches

   IBM Electric Punched Card Accounting Machines. Principles of Operation. 24 Card Punch, 26 Printing Card Punch

   IBM Customer Engineering Reference Manual. Preventive Maintenance and Adjustments. Types 513-514 Reproducing Punches. Type 519 Document-Originating Machine. Types 517-523 Gang Summary Punches. Type 528 Accumulating Reproducer

   International Business Machines Corporation
   590 Madison Avenue
   New York 22, New York

6. IBM 024 Manual Card Punch

   IBM Customer Engineering Reference Manual. Preventive Maintenance and Adjustments. Type 24-26 Card Punches. Type 534-536 Cardatype Card Punches. Type 526 Printing Summary Punch. Type 824-826 Typewriter Card Punches

   International Business Machines Corporation
   590 Madison Avenue
   New York 22, New York

CHAPTER 17

REDUCTION AND SPECTRAL ANALYSES OF M.I.T. BIVANE* DATA

Duane A. Haugen
Geophysics Research Directorate

17.1 Introduction

The purpose of this chapter is to describe the computations performed on the Massachusetts Institute of Technology bivane data and to present the results of the computations. As discussed in Chapter 15, the bivane data consisted of 20-minute recordings of wind speed, azimuth and elevation angles on Esterline-Angus tapes. These tapes were sent to Iowa State College where the data were converted to digital form and entered on IBM punch cards with the equipment described in Chapter 16. The cards were then sent to the Geophysics Research Directorate for analysis on high-speed computers.

The computational effort began during the Spring of 1957 and was completed in the Fall of 1958. During that time, results of the computations were sent to three universities** under contract to GRD. The various studies that have been carried out at these universities and at GRD with these data to date are not reported on here. Briefly, however, these studies include analyses of characteristic features of edd, wind variance spectra (Penn State); studies of features of the scale of turbulence in an Eulerian frame of reference (M.I.T., Iowa State); relationships between Lagrangian and Eulerian descriptions of turbulence (Penn State, GRD).

17.2 Computational Procedure

The basic data on the IBM cards consist of one observation per card of quantities linearly proportional to the azimuth angle, elevation

* For brevity, the data from the bivane heated-thermocouple instrumentation system described in Chap. 15 will be referred to here simply as bivane data.

**Iowa State College, Ames, Iowa; Massachusetts Institute of Technology, Cambridge, Mass.; The Pennsylvania State University, University Park, Pennsylvania.

angle, and wind speed, respectively. Let us define a set as the number of cards or observations for a 20-minute record at one anemometer site. A set contains roughly 1130 cards, although this number varies from run to run.

The observational interval for these basic data is approximately one second. As indicated in Chapter 15, the tape rate on the Esterline-Angus recorders was 0.75 in/sec. The tapes were fed through the equipment at Iowa State College at a rate of 12 in/min and sampled every four seconds. Thus, the observational interval or sampling rate for these data is given by

$$\Delta t = \frac{16}{15} = 1.066\ldots \text{ seconds} \tag{1}$$

The number of cards per set for a run exactly 20 minutes long is thus 1125, but the length of the runs varies slightly from run to run.

The wind fluctuation data were computed from each card by means of the following equations:

$$\text{Azimuth, } A_i = 80.0 + 0.2\,\alpha_i \text{ (degrees)} \tag{2}$$

$$\text{Elevation, } E_i = -50.0 + 0.1\,\epsilon_i \text{ (degrees)} \tag{3}$$

$$\text{Speed, } V_i = 0.011\,\nu_i \text{ (m/sec)} \tag{4}$$

where α_i, ϵ_i, and ν_i are quantities punched on the IBM cards. The constants in Eqs. (2) - (4) are the calibration constants furnished by Dr. Stewart of Iowa State College. Each parameter, α_i, ϵ_i, and ν_i, is a three-digit number with a range given roughly by

$$100 \lesssim \alpha_i, \epsilon_i, \nu_i \lesssim 999$$

As discussed in Chapter 16, the accuracy of these numbers is somewhat difficult to determine. By a visual examination of the Esterline-Angus tapes, however, it appears reasonable to question the reliability of only the third digit of these parameters. This digit is determined within roughly ± 5 units; the extreme error is apparently only ± 1 unit in the tens column. The effect of these inaccuracies on the computational results will be discussed in Section 17.3.

17.2.1 Eddy Winds

The eddy winds were computed as deviations from a vector mean wind defined for each set such that the sum of each eddy wind component is identically zero. The direction of the vector mean wind is given by:

$$E^* = \tan^{-1} \frac{\sum_{i=1}^{N} V_i \sin E_i}{\sum_{i=1}^{N} V_i \cos E_i} \tag{6}$$

$$A^* = \tan^{-1} \frac{\sum_{i=1}^{N} V_i \cos (E_i - E^*) \sin A_i}{\sum_{i=1}^{N} V_i \cos (E_i - E^*) \cos A_i} \tag{7}$$

where E^* is the elevation angle measured from a horizontal plane and A^* is the azimuth angle measured from true North. The individual wind speed fluctuations along the mean direction are given by

$$U_i = V_i \cos (E_i - E^*) \cos (A_i - A^*) \tag{8}$$

whence the magnitude of the vector mean wind,

$$\overline{U} = \frac{1}{N} \sum_{i=1}^{N} U_i \tag{9}$$

The eddy wind components are defined as deviations along the mean wind direction, u_i ; across the mean wind direction in the "horizontal" plane, v_i ; and perpendicular to the "horizontal" plane, w_i :

$$u_i = U_i - \overline{U} \tag{10}$$

$$v_i = V_i \cos (E_i - E^*) \sin (A_i - A^*) \tag{11}$$

$$w_i = V_i \sin (E_i - E^*) \tag{12}$$

Equations (2) through (12) were programmed for the IBM 704 at the

General Electric Company, Lynn, Massachusetts. The output of the program includes values of E*, A*, $\overline{U}$, $\overline{u}$, $\overline{v}$, and $\overline{w}$ for each set. The eddy wind components were stored on tape for the spectral computations and also punched on IBM cards to form a permanent record.

In addition to the above, the standard deviation of the azimuth angle was computed through the expression

$$\sigma(A) = 0.2 \left| \frac{1}{N} \sum_{i=1}^{N} a_i^2 - \overline{a}^2 \right|^{\frac{1}{2}} \qquad (13)$$

It should be mentioned that the values of $\overline{u}$, $\overline{v}$, and $\overline{w}$ were listed for each set only to permit a check of round-off error in the computations. In no case did the mean of an eddy wind component exceed 10^{-5} m/sec.

17.2.2 Variance Spectra

Variance spectra for each eddy wind component were then computed on the IBM 704. The method of analysis used was that of the Fourier transform of the auto-covariance. A comprehensive discussion of spectral analysis of a finite record of discrete observations has been recently published by Blackman and Tukey.[1] The computational formulae used are merely listed here for sake of ready reference.

Suppose we have a set of N observations of x_i where $1 \leq i \leq N$. The auto-covariance, R_K, is given by

$$R_K = \frac{1}{N-K} \sum_{i=1}^{N-K} x_i x_{i+K} \quad (0 \leq K \leq M) \qquad (14)$$

where K is the lag number and M is the maximum lag number used. The raw spectral density estimates (sometimes referred to as unsmoothed line spectral estimates) are computed by

$$L_o = \frac{1}{M} \left[\frac{1}{2} (R_o + R_M) + \sum_{K=1}^{M-1} R_K \right] \qquad (15)$$

$$L_n = \frac{2}{M}\left\{\frac{1}{2}\left[R_o + (-)^n R_M\right] + \sum_{K=1}^{M-1} R_K \cos\frac{\pi K n}{M}\right\}; \quad (1 \leq n \leq M-1) \tag{16}$$

$$L_M = \frac{1}{M}\left\{\frac{1}{2}\left[R_o + (-)^M R_M\right] + \sum_{K=1}^{M-1} (-)^K R_K\right\} \tag{17}$$

These spectral density estimates have the dimension of variance per unit frequency interval, Δf, given by

$$\Delta f = \frac{1}{2\,M\Delta t} \quad \text{cycles/sec} \tag{18}$$

where Δt is the observational interval. The estimates are entered at frequencies, f_n, given by

$$f_n = \frac{n}{2\,M\Delta t} \quad \text{cy/sec}; \quad (1 \leq n \leq M) \tag{19}$$

The highest frequency possible with observational data is called the Nyquist frequency, f_y. For digital data, f_y is given by $\frac{1}{2\Delta t}$.

It is customary to smooth the raw spectral estimates obtained by the cosine transform method in an attempt to counterbalance the effect of the spectral window introduced by a finite record. The smoothing process, defined as "hamming,"[1] was used in these computations. This results in "refined spectral estimates," U_n, given by

$$U_o = 0.54\,L_o + 0.46\,L_1 \tag{20}$$

$$U_n = 0.23\,L_{n-1} + 0.54\,L_n + 0.23\,L_{n+1}; \quad (1 \leq n \leq M-1) \tag{21}$$

$$U_M = 0.46\,L_{M-1} + 0.54\,L_M \tag{22}$$

The value of M used throughout the spectral computations was 60. The results of Equations (14) through (17) and (20) through (22) were listed for each eddy wind component in the sets of observations. In

addition, the standard deviation, σ, of the particular eddy wind component was listed; this is easily computed as the square root of R_o.

17.2.3 Cross-Spectra

The computations leading to cross-spectral estimates followed the same general scheme outlined for the variance spectral estimates. Suppose we have two sets of observations, x_i and y_i where $1 \leq i \leq N$. Cross-correlation functions are defined as

$$S_K^+ = \frac{1}{2(N-K)} \sum_{i=1}^{N-K} \left| x_i y_{i+K} + x_{i+K} y_i \right| ; (0 \leq K \leq M) \qquad (23)$$

$$S_K^- = \frac{1}{2(N-K)} \sum_{i=1}^{N-K} \left| x_i y_{i+K} - x_{i+K} y_i \right| ; (0 \leq K \leq M) \qquad (24)$$

The raw cospectral estimates are defined by the cosine transform of Eq. (23):

$$C_o = \frac{1}{M} \left[\frac{1}{2} (S_o^+ + S_M^+) + \sum_{K=1}^{M-1} S_K^+ \right| \qquad (25)$$

$$C_n = \frac{2}{M} \left\{ \frac{1}{2} \left[S_o^+ + (-)^n S_M^+ \right| + \sum_{K=1}^{M-1} S_K^+ \cos \frac{\pi K n}{M} \right\} ; \qquad (26)$$

$$(1 \leq n \leq M - 1)$$

$$C_M = \frac{1}{M} \left\{ \frac{1}{2} \left[S_o^+ + (-)^M S_M^+ \right| + \sum_{K=1}^{M-1} (-)^K S_K^+ \right\} \qquad (27)$$

The raw quadrature-spectral estimates are given by the sine transform of Eq. (24):

$$Q_o = 0 \qquad (28)$$

$$Q_n = \frac{2}{M} \sum_{K=1}^{M-1} S_K \sin \frac{\pi K n}{M} \quad ; \quad (1 \leq n \leq M-1) \tag{29}$$

$$Q_M = 0 \tag{30}$$

The estimates are then smoothed by "hamming":

$$UC_0 = 0.54\, C_0 + 0.46\, C_1 \tag{31}$$

$$UC_n = 0.23\, C_{n-1} + 0.54\, C_n + 0.23\, C_{n+1} \quad ; (1 \leq n \leq M-1) \tag{32}$$

$$UC_M = 0.46\, C_{M-1} + 0.54\, C_M \tag{33}$$

$$UQ_0 = UQ_M = 0 \tag{34}$$

$$UQ_n = 0.23\, Q_{n-1} + 0.54\, Q_n + 0.23\, Q_{n+1} \quad ; (1 \leq n \leq M-1) \tag{35}$$

The value of M used for the cross-spectral computations was 60. The results of Eqs. (23) through (35) were listed for each of the ten pairs of sets of an eddy wind component that were possible with the five anemometers in operation during the experiments. In general, the cross-spectral computations were made only between similar components; for example, u-component at anemometer No. 1 with u-component at anemometer No. 2, and so on. No cross-spectra between different components at either single or different anemometers were computed. In the following, then, the term "cross-spectra" refers only to comparison of like components between two anemometers.

It was apparent at the beginning of the effort that funds would not permit computation of all possible cross-spectra. Furthermore, it was felt that cross-spectra for the w-component would probably be of poorer quality than the u or v cross-spectra in the sense that a relatively high percentage of the turbulent energy for the w-component occurs at frequencies higher than the Nyquist frequency for the bivane observations (approximately 1 cycle/2 sec). Computation of w cross-spectra was thus made for only four experiments. It was subsequently decided that further

computations of w cross-spectra would not be made.

Only a few u and v cross-spectra were computed for experiments with the anemometer line oriented perpendicular to the mean wind direction. These cross-spectral computations were excluded during the first part of the effort to ensure sufficient funds for cross-spectral computations for all experiments with the anemometer line oriented parallel to the mean wind direction.

17.2.4 Supplementary Computations

Since the cross-spectral data were limited to selected wind components and experiments, these data were supplemented by computation of cross-correlation or space correlation coefficients for the components of all experiments not having cross-spectral data. This correlation coefficient is defined by

$$R(x) = \frac{\sum_{i=1}^{N} u_{ip}\, u_{iq}}{N\, \sigma(u_p)\, \sigma(u_q)} \quad ; \quad \begin{matrix} p, q = 1, 2, 3, 4, 5 \\ p \neq q \end{matrix} \tag{36}$$

where x is the separation distance between anemometers p and q, N is the total number of observations, and σ is the standard deviation.

For the purpose of this report, further computations were made from the correlation functions defined by Eqs. (14), (23), and (24). It will be noted that these functions are not in the most suitable form for studies of the structure of turbulence by means of correlation coefficients. First of all, the functions are not normalized, that is, divided by the proper standard deviations. Second, the S_K^+'s and S_K^-'s need to be added or subtracted to yield cross-correlation functions with the eddy component at one anemometer lagged in time from the eddy component at another anemometer. Accordingly, the correlation coefficient data presented here for a given wind component are defined by

$$R_K(u) = \frac{1}{N-K} \frac{\sum_{i=1}^{N-K} u_i\, u_{i+K}}{\sigma^2(u)} \tag{37}$$

$$T_K^+ (u_p, u_q) = \left[S_K^+ (u_p, u_q) - S_K^- (u_p, u_q)\right] \Big/ \sigma(u_p)\ \sigma(u_q) \tag{38}$$

$$T_K^- (u_p, u_q) = \left[S_K^+ (u_p, u_q) + S_K^- (u_p, u_q)\right] \Big/ \sigma(u_p)\ \sigma(u_q) \tag{39}$$

where the terms have all been previously defined. Assuming a mean wind direction of 180°, the T_K^+'s are lagged (in time) downwind for parallel orientations of the anemometer line, and lagged to the east for transverse orientations. The T_K^-'s are lagged upwind for longitudinal orientations, to the west for transverse orientations. It should be noted that for K = 0 (no lag in time), Eqs. (36), (38), and (39) are identical.

There are two remaining types of statistics that have been computed for each set of bivane data; namely, Reynolds' stress terms and gustiness ratios. The former are tabulated as covariances ($\overline{uv}$, $\overline{uw}$, and $\overline{vw}$) and correlation coefficients ($R_{xy} = \frac{\overline{uv}}{\sigma(u)\,\sigma(v)}$, etc.). Gustiness ratios are defined as the ratio of the standard deviation of an eddy wind component to the mean wind speed; for example, $G_x = \frac{\sigma(u)}{\bar{U}}$.

17.3 Discussion of Data

It is to be expected that not all the bivane data collected during the Prairie Grass project were suitable for analysis. Several runs were excluded from the processing procedure at Iowa State College upon visual examination of the Esterline-Angus tapes by M. I. T. personnel. The criterion for elimination of these runs was the occurrence of wind speeds high (or low) enough to cause off-scale deflection of the recording pen roughly 3 percent or more of the time.

Additional data were eliminated by Iowa State personnel after processing. This elimination was based on characteristics of the frequency distributions of the wind speed.

As discussed in Chapter 16, the transformation of the analogue signal of wind speed departed most seriously from linearity for high wind speeds. On occasion, the wind speed was high enough for a long enough period of time to result in a falsely bimodal frequency distribution with

one peak near the mean wind speed and the other near the high speed end of the range.

A log of the bivane data for which spectral analyses were made is presented in Table 17.1 (page 139). A few spectra were computed for data sets with bimodal distributions of wind speed for comparison purposes. These sets are indicated. The orientation of the anemometer line and the mean wind direction are also listed for each experiment. Finally, those runs for which cross-spectra were computed are logged. The anemometer numbers (or set numbers) listed in all the tables in this chapter correspond to the numbers shown in Fig. 15.7 (page 72).

Statistical summaries of the data are presented in Tables 17.2 and 17.3. The space or cross-correlation coefficients (Eqs. 36, 38, and 39 for K = 0) are given in Table 17.4; auto-correlation coefficients (Eq. 37) in Table 17.5; smoothed spectral estimates (Eqs. 20, 21, and 22) in Table 17.6; T_K^+'s and T_K^-'s (Eqs. 38, 39) in Tables 17.7 and 17.8, respectively; and smoothed cospectral and quadrature spectral estimates (Eqs. 31 through 35) in Tables 17.9 and 17.10, respectively. All the data in Tables 17.6, 17.9, and 17.10 have the units of m^2/sec^2/unit frequency interval with the exception of runs 7 and 8. The basic data for these two runs were normalized during the spectral computations; these results are thus in the units of percent of variance per unit frequency interval. The various correlation coefficients tabulated are dimensionless.

The correlation coefficients in Tables 17.5, 17.7, and 17.8 are identified by lag number, K. To convert this lag number to the dimensions of time, one must multiply by $\Delta t = 1.067$ seconds. (See Eq. 1.) The spectral estimates are identified by harmonic number, n.* To convert this number to the dimensions of a frequency, one must multiply by $\frac{1}{128}$ cycles per second. Thus, the lowest frequency resolved by this analysis is 1 cycle per 128 seconds; the highest, or Nyquist frequency is 1 cycle per 2.133 seconds.

With the exception of some of the statistical summary data, the results are tabulated according to a standard IBM 704 floating point format. The algebraic sign of the number is given first (negative signs are printed;

*In the actual tabulations, a capital N is used instead of the lower case n to indicate harmonic number.

blank spaces are understood to be positive signs). The first three digits following the decimal point form the mantissa. The number to the right of the comma is an exponent to the base ten. For example, ".123,1" is read "1.23"; ".123,-1" is read "0.0123."

17.3.1 Accuracy of Data

The problem of determining the absolute accuracy of the results tabulated in this chapter is a practically impossible task. However, it is necessary to establish a qualitative estimate of the amount of error contained in these data.

For this purpose, we begin by simply adding the "average" errors discussed in Chapters 15 and 16: an error of about 5 percent for the ensing-recording system and about 3 percent for the data reduction equipment. These errors, considered cumulatively, suffice to limit seriously the value of the third digit of the significant figures tabulated as the mantissa in the spectral analysis results. Indeed, one can conceive occurrences of observational and reduction error sufficient to limit the accuracy of the second digit of the mantissa to perhaps ± 5 units. It was decided, however, to list the third digit in preparing the results for publication. It is freely admitted that this decision is on the side of being overly zealous. The interested reader may round off the results to two significant figures or simply drop the third digit as he sees fit. Before leaving this part of the discussion, it should be emphasized that these errors are relative errors determined primarily by the response characteristics of the data sensing, recording, and reduction systems.

There is one error that occurred occasionally in the preparation of the IBM cards at Iowa State College that deserves a brief mention. It was somewhat belatedly discovered that faulty punch circuits in the equipment were causing blanks or double punches to appear in the data fields. Fortunately, nearly all the faulty punches occurred in the units column of the data fields. This was "corrected" by punching a "5" in the units column. This punch error was present for about 25 runs with a frequency of roughly 150 per set. A punch error in the tens or hundreds columns occurred about

twice in a set. This was corrected by linear interpolation between the cards just before and after the error card. The effect of the errors on the relative accuracy of the spectra is negligible.

So far as is known, no errors were introduced during the computational procedures. Each data set was checked for proper identification and sequence of observations as a matter of routine on the IBM 704. The programs were fully checked-out prior to the computations and again at about three-fourths of the way through the computational task.

Finally, it must be mentioned that occasional errors might have arisen inthe results during the process of preparing them for publication. In order to publish as much of the data as possible and limit the size of this volume to reasonable proportions, it was necessary to prepare master sheets of the IBM 704 print-out results that could be photographically reduced. The format of these sheets differs from that of the IBM 704 print-out sheets. Further, as pointed out before, it was decided to publish normalized R_K's and T_K's ; these quantities were not printed out by the IBM 704 program we used. All that can be said here is that all the master sheets have been carefully checked for transcribing and computational errors. This task was performed with the aid of a Datatron computer at Melpar, Inc., Boston, Mass.

It seems appropriate at this point to discuss a somewhat different error that is present in the spectral estimates. This is the error usually defined as "aliasing" which enters when one samples a record at discrete observational intervals. It will be remembered that the Nyquist period is defined as twice the observational interval, Δt. If fluctuations with periods less than the Nyquist period are recorded in the data, they will affect the spectral estimates for periods greater than the Nyquist period or for frequencies less than the Nyquist frequency.[1] Aliasing can be minimized only by averaging the observations over the observational interval; it cannot be corrected for after it has been permitted to enter.

The sensor-recorder systems used for Prairie Grass were designed to damp out wind fluctuations with periods of roughly one second or less. (This of course determined the sampling rate used with the

Iowa State equipment.) To check how well these short-period fluctuations were damped out, an experiment was performed to provide a rough estimate of the degree of aliasing in the results. One-second averages of the records for anemometer No. 2, Run No. 7, were listed by hand by M. I. T. personnel. These data were punched on cards at GRD; spectral density estimates were then computed on the IBM 704. The results are presented in Table 17.11. It will be seen that aliasing exists over a frequency range of roughly 1/4 to 1/2 cycle/second (n = 30 to 60). No attempt is made here to do more than indicate qualitatively that some aliasing does exist in these results. The severity of aliasing could be determined properly only by a much more extensive set of computations. It is clear, however, that the spectral estimates on the high frequency end are of limited value—particularly for studies of models of the structure of atmospheric turbulence. The spectral estimates at frequencies less than roughly 1/4 cycle/second do not appear to be seriously affected by aliasing.

There are some data presented here that are questionable or of limited value for a reason quite different than any discussed in the previous section. These are data for experiments with low wind speeds (wind speeds below roughly 3 m/sec 50 percent or more of the time). These data are questionable because of the relatively poor response of the bivane to changes in the azimuth and elevation angles at low wind speeds. Run No. 13 is the best example of this situation. These data are nevertheless published to furnish a qualitative idea at least of the characteristics of the eddy variance spectra at low wind speeds.

ACKNOWLEDGEMENTS

It is probably evident from the size of the effort reported in this chapter that a number of persons have contributed signif.cantly to its successful completion. The author is indebted to Miss Betty French of the General Electric Company for programming the computation of the eddy wind components. Mr. Richard Hopkins, also of General Electric, worked long and carefully in his operation of the IBM 704 on production runs. Mrs. Janet Dwyer and Miss Dorothy Quinn of the Computations Branch, GRD, were most helpful and cooperative in making check computations and certain statistical summaries of the data on the IBM 650. Mr. Theodore Chin of Melpar, Inc., deserves special mention for very efficiently and cheerfully accomplishing the laborious task of preparing the IBM 704 results for publication. Finally, Miss Helen Scott, who typed the original manuscript, deserves a special vote of thanks.

REFERENCE

1. Blackman, R.B., and J.W. Tukey, "The Measurement of Power Spectra from the Point of View of Communications Engineering," The Bell System Technical Journal, Vol. 37; No. 1, pp. 185-282; No. 2, pp. 485-570, (January and March, 1958).

TABLE 17.1 Log of bivane data used to compute eddy wind variance spectra. Anemometer numbers in paranthesis are data sets listed by Dr. Stewart (Iowa State College) as being of questionable value. L denotes longitudinal or N-S orientation of anemometer line; T, transverse or E-W orientation. The mean wind direction is extracted from Table 6.1, Vol. I, using wherever possible the 20-minute record of the M.I.T. source vane. Those runs for which cross-spectra were computed in addition to variance spectra are indicated in the last column.

Run No.	Anemometers	Anemometer Line Orientation	Mean Wind Direction (Degrees)	Cross-Spectra
5	3, 4	L	176	
6	1, 2, 3, 4, (5)	L	190	x
7	(1), 2, 3, 4, 5	L	197	x
8	1 - 5	T	176	x
9	3	T	206	
10	1 - 5	L	217	x
14	1 - 5	L	192	x
15	1 - 5	T	209	
16	1 - 5	L	201	x
17	1 - 5	L	182	x
18	1 - 5	T	189	
19	(1), (2), 3, (4), 5	T	166	
21	1, 2, 3, (4), (5)	L	179	x
22	3	T	176	
23	1, 2, 3, (4), (5)	T	128	x
24	1, 2, 3, (4), 5	L	141	x
26	3, 4	L	186	
27	1, 2, 3	T	185	x
28	1 - 5	T	174	
32	1 - 5	L	170	x
35a	1 - 5	L	136	x
36	1 - 5	T	158	
37	1 - 5	T	186	
38	1 - 5	T	170	
39	1 - 5	L	139	x
41	1 - 5	T	198	
42	1 - 5	T	212	
43	1 - 5	L	170	x
44	1 - 5	T	158	
45	1, 2, 4, 5	T	161	x
46	1 - 5	L	134	x
53	1 - 5	T	133	x
54	1 - 5	L	140	x
55	1 - 5	L	155	x
56	1 - 5	T	152	x
58	1 - 5	T	179	x
59	1 - 5	T	173	x
60	1 - 5	T	199	x
61	1, 2	T	206	
62	1 - 5	T	214	x
65	1, 2, 3, 5	L	173	x
66	1 - 5	L	165	x
67	1 - 5	T	182	x
68	1 - 5	T	173	x

TABLE 17.2 Vector mean wind and standard deviation of eddy wind components and azimuth angle. Elevation angle, E^*, and azimuth angle, A^*, are given in degrees; mean wind speed, $\bar{U}$, and standard deviations, $\sigma(u)$, $\sigma(v)$, and $\sigma(w)$ in m/sec; standard deviation of azimuth angle is in degrees.

Run No.	Anemometer No.	E^*	A^*	$\bar{U}$	$\sigma(u)$	$\sigma(v)$	$\sigma(w)$	$\sigma(A)$
5	3	-6.5	169.9	5.557	1.17	1.23	0.433	13.2
	4	0.1	172.6	6.701	1.26	1.36	0.359	11.7
	1	-5.6	174.7	7.256	1.11	1.09	0.611	8.7
	2	-10.7	176.4	6.441	1.04	1.04	0.545	9.4
6	3	-6.2	175.8	5.421	0.963	0.882	0.421	9.5
	4	0.0	179.4	6.846	1.05	1.01	0.387	8.5
	5	-7.5	176.3	8.397	1.29	1.30	0.560	8.9
	1	-2.7	201.7	5.158	1.79	1.90	0.583	21.7
	2	-5.4	202.9	4.354	1.41	1.61	0.417	22.3
7	3	-7.4	203.8	3.342	1.14	1.28	0.352	23.5
	4	0.3	205.5	4.916	1.49	1.71	0.387	21.3
	5	-3.4	202.7	5.544	1.70	1.85	0.445	21.0
	1	0.7	178.5	6.334	1.65	1.67	0.497	15.6
	2	-1.2	178.5	5.159	1.25	1.37	0.395	16.1
8	3	-3.4	179.0	3.631	0.909	0.997	0.303	16.7
	4	4.6	183.0	5.617	1.44	1.66	0.372	17.4
	5	1.2	180.2	5.686	1.40	1.58	0.369	15.9
9	3	-3.6	184.0	5.720	1.05	1.17	0.444	11.0
	1	-0.9	205.6	5.962	2.18	1.76	0.556	18.1
	2	-6.0	203.3	4.902	1.70	1.39	0.460	17.4
10	3	-6.6	205.7	3.388	1.14	0.972	0.319	17.1
	4	1.9	212.8	5.706	1.93	1.51	0.358	16.2
	5	-0.5	207.9	5.432	1.63	1.57	0.403	17.6
	1	-15.0	183.4	1.759	0.172	0.134	0.176, -1	4.1
	2	-28.6	188.0	1.767	0.174	0.104	0.702, -1	3.2
13	3	-19.7	185.2	1.662	0.164	0.124	0.604, -1	4.2
	4	-2.3	191.7	1.873	0.202	0.126	0.112, -1	3.6
	5	-8.7	183.7	1.996	0.222	0.145	0.242, -1	4.5
	1	-11.8	200.7	3.610	0.695	0.799	0.339	12.7
	2	-10.2	199.7	3.823	0.703	0.841	0.321	14.6
15	3	-17.1	201.3	3.674	0.662	0.842	0.327	13.2
	4	-0.7	206.9	4.627	0.853	1.14	0.323	13.8
	5	-8.8	196.2	4.819	0.928	0.934	0.333	11.1
	1	-10.3	190.7	3.483	1.01	1.29	0.438	21.9
	2	8.8	192.4	3.543	1.09	1.26	0.398	21.6
16	3	-15.8	193.3	3.214	0.957	1.21	0.397	22.3
	4	-1.5	197.6	4.111	1.19	1.37	0.355	19.9
	5	-6.8	186.8	4.490	1.21	1.23	0.410	16.9
	1	-15.3	168.7	3.580	0.569	0.362	0.299	5.9
	2	-22.6	170.9	3.523	0.556	0.378	0.274	6.1
17	3	-20.2	178.0	3.258	0.540	0.302	0.280	5.3
	4	-1.2	170.4	3.818	0.698	0.359	0.246	5.3
	5	-4.1	172.7	3.776	0.564	0.402	0.226	6.0

TABLE 17.2 (continued)

Run No.	Anemometer No.	E*	A*	$\bar{U}$	σ(u)	σ(v)	σ(w)	σ(A)
	1	-14.8	182.6	4.122	0.600	0.399	0.315	5.6
	2	-19.2	184.0	4.144	0.659	0.413	0.296	5.6
18	3	-17.6	185.1	3.574	0.484	0.37[illegible]	0.296	5.9
	4	-0.8	191.6	4.566	0.689	0.411	0.265	5.0
	5	-4.7	183.1	4.239	0.613	0.363	0.240	4.9
	1	-7.5	158.3	6.351	1.42	1.24	0.537	11.2
	2	-20.0	158.9	6.626	1.59	1.30	0.566	11.4
19	3	-3.1	158.0	6.177	1.38	1.28	0.453	11.6
	4	-4.4	166.8	7.830	1.67	1.46	0.451	10.6
	5	-2.7	161.7	6.995	1.37	1.23	0.376	10.0
	1	-9.4	169.6	6.276	1.28	0.684	0.493	6.5
	2	5.1	169.8	6.186	1.27	0.713	0.52[illegible]	6.8
21	3	-1.3	169.5	5.772	1.21	0.698	0.456	7.0
	4	-3.6	177.1	6.836	1.39	0.715	0.396	5.9
	5	-5.6	170.0	6.700	1.27	0.685	0.408	5.9
22	3	-1.7	169.0	6.721	1.25	0.758	0.524	6.4
	1	-11.6	122.9	6.270	1.16	0.745	0.519	6.7
	2	8.2	125.5	6.366	1.10	0.719	0.468	6.4
23	3	-3.1	124.6	5.726	1.03	0.632	0.453	6.3
	4	-2.1	133.7	8.177	1.45	0.833	0.477	5.8
	5	-1.9	130.6	7.337	1.24	0.735	0.418	5.8
	1	-10.8	136.2	6.519	1.10	0.723	0.511	6.3
	2	9.8	139.0	6.323	1.05	0.720	0.480	6.4
24	3	-2.7	135.4	5.872	1.05	0.658	0.441	6.4
	4	-3.2	147.6	7.571	1.45	0.745	0.430	5.6
	5	-2.6	141.7	7.044	1.19	0.634	0.416	5.2
26	3	-1.8	178.7	6.593	1.45	1.34	0.472	11.9
	4	-1.8	187.6	7.171	1.65	1.29	0.397	10.5
	1	-3.9	174.8	6.374	1.53	1.09	1.20	9.9
27	2	-2.1	182.4	6.676	1.33	1.16	0.497	10.2
	3	-2.0	175.2	5.999	1.16	1.18	0.420	11.4
	1	-5.4	165.7	2.733	0.538	0.297	0.217	6.2
	2	-1.3	179.5	2.833	0.517	0.258	0.210	5.2
28	3	-3.6	168.2	2.491	0.490	0.279	0.187	6.5
	4	-3.8	175.3	2.986	0.569	0.268	0.181	4.9
	5	-2.2	170.3	3.111	0.519	0.268	0.191	4.9
	1	-1.1	172.1	2.229	0.584	0.165	0.125	4.1
	2	-1.1	167.5	2.175	0.571	0.164	0.106	4.3
32	3	-2.7	171.1	2.167	0.560	0.161	0.115	4.1
	4	-1.8	116.6	2.233	0.578	0.143	0.930, -1	3.5
	5	1.7	172.2	2.518	0.597	0.162	0.107	3.5
	1	-3.7	138.4	4.276	0.752	0.466	0.320	6.2
	2	-1.2	137.7	4.097	0.731	0.411	0.260	5.7
35B	3	5.0	135.8	3.879	0.686	0.380	0.292	5.6
	4	-4.9	138.0	4.362	0.769	0.399	0.274	5.1
	5	1.6	143.8	4.648	0.859	0.415	0.264	5.1

TABLE 17.2 (continued)

Run No.	Anemometer No.	E*	A*	$\bar{U}$	σ(u)	σ(v)	σ(w)	σ(A)
	1	-7.0	164.5	2.030	0.272	0.234	0.135	6.7
	2	-0.4	160.6	1.873	0.256	0.203	0.885, -1	6.3
36	3	-2.1	164.5	1.881	0.247	0.201	0.832, -1	6.3
	4	-11.0	162.5	2.250	0.308	0.242	0.129	6.4
	5	2.3	162.6	2.228	0.293	0.343	0.855, -1	9.0
	1	-4.7	181.4	5.327	0.919	0.609	0.436	6.7
	2	-1.7	179.2	4.824	0.748	0.518	0.351	6.2
37	3	-0.9	181.7	4.880	0.774	0.517	0.343	6.1
	4	-9.8	179.4	5.922	0.986	0.569	0.463	5.6
	5	2.6	180.6	5.855	0.988	0.576	0.329	5.7
	1	-5.5	167.0	5.127	0.922	0.543	0.427	6.1
	2	-2.3	166.4	4.447	0.762	0.471	0.300	6.0
38	3	-1.7	166.0	4.698	0.811	0.496	0.356	6.1
	4	-9.9	165.4	5.350	0.901	0.508	0.420	5.4
	5	1.8	168.2	5.141	0.857	0.471	0.303	5.4
	1	-10.5	126.5	2.247	0.570	0.408	0.149	10.9
	2	-0.4	126.5	2.040	0.582	0.369	0.106	10.7
39	3	-2.2	119.3	2.100	0.621	0.425	0.115	12.0
	4	-6.9	126.4	2.307	0.677	0.365	0.151	9.2
	5	1.8	132.5	2.485	0.694	0.320	0.954, -1	7.8
	1	-10.4	193.2	4.359	0.606	0.425	0.306	5.7
	2	-4.3	190.3	4.008	0.544	0.346	0.251	5.0
41	3	-3.5	194.0	4.147	0.568	0.355	0.294	4.9
	4	-6.2	193.0	4.861	0.600	0.386	0.309	4.6
	5	2.1	190.4	4.824	0.686	0.384	0.254	4.6
	1	-9.9	206.9	6.870	1.07	0.802	0.494	6.9
	2	-4.4	205.3	6.394	1.07	0.693	0.447	6.2
42	3	-3.4	208.1	6.455	1.07	0.728	0.499	6.5
	4	-6.4	205.7	7.792	1.19	0.748	0.507	5.4
	5	2.7	203.8	7.474	1.22	0.682	0.409	5.3
	1	-4.9	167.8	5.412	1.26	1.33	0.432	14.5
	2	-4.1	167.9	4.906	1.13	1.18	0.386	14.0
43	3	-9.3	166.3	5.066	1.14	1.26	0.424	14.4
	4	1.8	166.5	5.876	1.32	1.46	0.425	14.4
	5	2.2	164.5	6.151	1.30	1.42	0.377	13.8
	1	-4.4	149.1	5.701	1.29	1.74	0.452	17.8
	2	-3.4	150.5	5.295	1.17	1.51	0.406	16.7
44	3	1.7	148.2	6.644	1.54	2.12	0.501	18.2
	4	-8.5	150.4	5.322	1.20	1.53	0.484	16.5
	5	2.7	153.5	6.407	1.60	1.51	0.417	14.0
	1	-4.4	162.4	5.497	1.01	0.913	0.409	9.4
45	2	-2.7	163.9	5.371	0.951	0.892	0.385	9.4
	4	-8.0	162.2	5.249	0.927	0.823	0.397	8.9
	5	2.7	162.4	6.622	1.22	0.868	0.369	7.7
	1	-4.1	130.9	5.107	0.909	0.752	0.364	8.5
	2	-3.3	133.8	4.960	0.962	0.676	0.369	7.9
46	3	-7.3	128.0	4.655	0.846	0.721	0.373	8.7
	4	1.1	133.3	5.843	1.14	0.778	0.365	7.5
	5	3.1	136.1	6.308	1.28	0.780	0.354	7.0

TABLE 17.2 (continued)

Run No.	Anemometer No.	E*	A*	$\bar{U}$	σ(u)	σ(v)	σ(w)	σ(A)
	1	-10.9	127.5	2.532	0.251	0.164	0.989, -1	3.6
	2	-0.2	124.5	1.937	0.160	0.110	0.805, -1	3.2
53	3	-1.7	123.9	2.160	0.224	0.149	0.661, -1	4.0
	4	-1.7	126.5	2.527	0.258	0.157	0.816, -1	3.5
	5	2.3	131.8	2.765	0.283	0.145	0.925, -1	2.9
	1	-7.5	135.2	4.555	0.681	0.451	0.355	5.7
	2	-3.8	130.6	3.627	0.581	0.347	0.268	5.5
54	3	-1.9	132.8	3.765	0.586	0.372	0.266	5.7
	4	0.1	138.7	4.475	0.712	0.397	0.273	5.1
	5	2.1	141.1	4.117	0.564	0.343	0.221	4.8
	1	-8.0	150.8	5.462	0.752	0.553	0.402	5.8
	2	-0.4	150.5	5.944	0.991	0.608	0.440	5.9
55	3	-1.9	150.4	5.172	1.01	0.531	0.390	5.6
	4	-2.1	153.5	6.762	1.21	0.671	0.414	5.6
	5	3.0	154.8	7.477	1.30	0.966	0.455	7.5
	1	-6.2	156.4	4.673	0.735	0.694	0.400	8.3
	2	-1.8	146.8	4.402	0.706	0.553	0.335	7.0
56	3	-0.5	148.3	5.315	0.943	0.765	0.381	8.2
	4	-1.6	147.2	4.674	0.792	0.626	0.347	7.3
	5	2.9	152.4	5.919	1.12	0.684	0.346	6.6
	1	-7.3	177.4	2.330	0.234	0.207	0.133	5.0
	2	-1.5	176.7	2.077	0.197	0.261	0.771, -1	7.2
58	3	-1.3	180.7	2.561	0.258	0.246	0.839, -1	5.4
	4	6.5	182.1	2.155	0.212	0.196	0.814, -1	5.2
	5	3.4	181.1	2.943	0.340	0.301	0.983, -1	5.8
	1	-2.6	175.9	2.687	0.406	0.335	0.207	7.1
	2	-1.8	176.8	2.415	0.364	0.322	0.121	7.6
59	3	0.0	179.9	2.990	0.363	0.370	0.140	6.9
	4	5.1	182.0	2.554	0.401	0.250	0.135	5.5
	5	2.7	178.9	3.224	0.311	0.460	0.133	8.2
	1	-7.6	195.6	4.734	0.738	0.427	0.356	5.0
	2	-3.3	194.2	4.368	0.691	0.439	0.302	5.7
60	3	-0.9	203.6	5.345	0.851	0.564	0.329	6.1
	4	6.1	204.4	4.653	0.806	0.612	0.355	7.4
	5	5.7	206.8	5.817	1.01	0.681	0.342	6.6
61	1	-6.7	203.3	7.541	1.16	1.48	0.553	10.8
	2	-1.1	201.4	7.086	1.17	1.47	0.487	11.6
	1	-8.6	208.7	5.377	1.07	0.766	0.401	8.0
	2	-2.1	206.5	5.065	1.02	0.797	0.372	8.8
62	3	-1.1	210.6	5.721	1.10	0.808	0.369	8.2
	4	1.0	207.2	5.221	1.05	0.690	0.383	7.4
	5	2.4	208.6	6.000	1.08	0.723	0.348	6.9
	1	-8.0	174.1	4.786	0.840	0.683	0.376	8.2
	2	-0.7	172.1	4.371	0.755	0.531	0.328	6.9
65	3	16.1	171.3	4.252	0.661	0.670	0.297	9.0
	5	1.8	175.9	5.075	0.894	0.789	0.287	8.8

TABLE 17.2 (continued)

Run No.	Anemometer No.	E*	A*	$\bar{U}$	σ(u)	σ(v)	σ(w)	σ(A)
	1	-8.8	165.7	3.635	0.416	0.542	0.264	8.4
	2	-1.4	166.7	3.144	0.401	0.594	0.190	10.6
66	3	-0.0	165.2	3.158	0.386	0.711	0.196	12.8
	4	0.2	173.1	3.599	0.556	0.846	0.182	13.1
	5	1.3	179.8	3.685	0.542	0.825	0.188	12.6
	1	-3.4	190.4	6.134	1.20	1.32	0.493	12.0
	2	-1.5	188.6	4.741	1.11	0.781	0.325	9.1
67	3	0.5	196.6	5.612	1.07	1.30	0.354	13.2
	4	-0.1	206.5	4.904	1.02	0.895	0.313	10.4
	5	0.8	198.1	5.734	0.963	1.50	0.318	14.5
	1	-9.7	189.9	2.871	0.498	0.728	0.231	14.0
	2	-2.0	179.5	2.615	0.491	0.636	0.167	13.5
68	3	0.7	182.7	2.996	0.605	0.889	0.195	16.3
	4	0.2	186.2	2.758	0.518	0.872	0.177	17.3
	5	1.4	193.0	3.145	0.590	0.882	0.174	15.6

TABLE 17.3 Covariances, $\overline{uv}$, $\overline{uw}$, and $\overline{vw}$ (m^2/sec^2); correlation coefficients, R_{xy} R_{xz}, and R_{yz}; and gustiness ratios, G_x, G_y, and G_z computed from bivane data.

Run No.	Anem. No.	$\overline{uv}$	$\overline{uw}$	$\overline{vw}$	R_{xy}	R_{xz}	R_{yz}	G_x	G_y	G_z
5	3	0.399	-0.138	0.144,-2	0.277	-0.272	0.270,-2	0.211	0.222	0.779,-1
	4	0.391	-0.117	0.147,-1	0.228	-0.259	0.301,-1	0.188	0.202	0.535,-1
6	1	-0.113	-0.353,-1	0.241,-1	-0.934,-1	-0.520,-1	0.362,-1	0.153	0.151	0.842,-1
	2	-0.767,-1	-0.516,-1	-0.163,-1	-0.709,-1	-0.910,-1	-0.288,-1	0.161	0.162	0.846,-1
	3	-0.837,-1	-0.151	-0.369,-2	-0.985,-1	-0.372	-0.994,-2	0.178	0.163	0.777,-1
	4	-0.613,-1	-0.560,-1	0.784,-3	-0.578,-1	-0.138	0.201,-2	0.153	0.148	0.565,-1
	5	-0.212	-0.230	0.111,-1	-0.126	-0.318	0.152,-1	0.154	0.155	0.667,-1
7	1	0.114,-1	-0.795,-1	-0.235,-2	0.335,-2	-0.761,-1	-0.212,-2	0.347	0.368	0.113
	2	0.430,-1	-0.448,-1	0.403,-1	0.189,-1	-0.762,-1	0.600,-1	0.324	0.370	0.957,-1
	3	0.109	-0.876,-1	-0.195,-1	0.747,-1	-0.218	-0.433,-1	0.342	0.383	0.105
	4	0.347	-0.820,-1	-0.176,-1	0.136	-0.142	-0.266,-1	0.303	0.348	0.787,-1
	5	0.255	-0.115	-0.116,-1	0.811,-1	-0.152	-0.141,-1	0.307	0.334	0.803,-1
8	1	0.350	-0.154	-0.797,-2	0.127	-0.188	-0.960,-2	0.261	0.264	0.786 -1
	2	0.312	-0.671,-1	-0.129,-1	0.182	-0.136	-0.238,-1	0.242	0.266	0.765,-1
	3	0.102	-0.655,-1	-0.710,-2	0.113	-0.238	-0.235,-1	0.250	0.274	0.834,-1
	4	0.301,-1	-0.826,-2	0.856,-1	0.126,-1	-0.154,-1	0.139	0.261	0.297	0.808,-1
	5	0.349	-0.126	0.298,-1	0.158	-0.244	0.511,-1	0.246	0.277	0.649,-1
9	3	0.198,-1	-0.141	0.141,-1	0.161,-1	-0.302	0.271,-1	0.183	0.204	0.776,-1
10	1	-0.374	-0.174	0.349,-1	-0.975,-1	-0.144	0.357,-1	0.366	0.295	0.933,-1
	2	-0.290	0.315,-1	-0.214,-1	-0.123	0.403,-1	-0.335,-1	0.347	0.283	0.939,-1
	3	-0.653,-1	0.298,-4	0.567,-2	-0.589,-1	0.819,-4	0.183,-1	0.336	0.287	0.942,-1
	4	0.278	-0.143	-0.898,-2	0.954,-1	-0.207	-0.166,-1	0.339	0.265	0.628,-1
	5	-0.145,-1	-0.981,-1	0.317,-2	-0.567,-2	-0.149	0.501,-2	0.299	0.290	0.742,-1
13	1	0.164,-1	0.201,-3	0.213,-3	0.711	0.664,-1	0.903,-1	0.976,-1	0.759,-1	0.909,-2
	2	0.919,-2	0.981,-2	0.482,-2	0.508	0.803	0.660	0.985,-1	0.589,-1	0.397,-1
	3	0.125,-1	0.132,-2	0.162,-3	0.615	0.133	0.216,-1	0.986,-1	0.743,-1	0.363,-1
	4	0.177,-1	-0.125,-3	0.896,-4	0.695	-0.533,-1	0.635,-1	0.108	0.675,-1	0.597,-2
	5	0.131,-1	0.844,-3	0.950,-3	0.407	0.157	0.271	0.111	0.726,-1	0.121,-1
15	1	-0.143,-1	-0.784,-1	0.742,-2	-0.258,-1	-0.333	0.274,-1	0.190	0.221	0.938,-1
	2	-0.412,-1	-0.710,-1	0.784,-2	-0.697,-1	-0.315	0.290,-1	0.184	0.220	0.839,-1
	3	-0.567,-1	-0.850,-1	-0.178,-2	-0.102	-0.393	-0.647,-2	0.180	0.229	0.890,-1
	4	-0.714,-1	-0.833,-1	-0.131,-1	-0.734,-1	-0.302	-0.356,-1	0.184	0.247	0.698,-1
	5	-0.212,-2	-0.154	-0.339,-2	0.245,-2	-0.337	-0.109,-1	0.192	0.194	0.690,-1

TABLE 17.3 (continued)

Run No.	Anem. No.	$\overline{uv}$	$\overline{uw}$	$\overline{vw}$	R_{xy}	R_{xz}	R_{yz}	G_x	G_y	C_z
	1	-0.267	-0.577,-1	-0.174,-2	-0.205	-0.130	-0.308,-2	0.292	0.372	0.126
	2	-0.290	-0.406,-1	-0.238,-1	-0.211	-0.936,-1	-0.475,-1	0.308	0.355	0.112
16	3	-0.234	-0.470,-1	-0.142,-1	-0.202	-0.123	-0.296,-1	0.298	0.377	0.134
	4	-0.272	-0.324,-1	-0.145,-1	-0.167	-0.767,-1	-0.298,-1	0.290	0.332	0.863,-1
	5	-0.352	-0.697,-1	-0.298,-1	-0.237	-0.140	-0.591,-1	0.270	0.274	0.914,-1
	1	0.114,-2	-0.571,-1	-0.571,-2	0.553,-2	-0.336	-0.538,-1	0.159	0.101	0.836,-1
	2	-0.128,-3	-0.935,-2	-0.557,-2	-0.609,-3	-0.614,-1	-0.538,-1	0.158	0.107	0.779,-1
17	3	-0.492,-2	-0.524,-1	-0.381,-2	-0.302,-1	-0.347	-0.451,-1	0.166	0.926,-1	0.861,-1
	4	0.199,-2	-0.552,-1	0.800,-3	0.794,-2	-0.321	0.906,-2	0.133	0.939,-1	0.644,-1
	5	0.950,-2	-0.960,-2	-0.880,-3	0.419,-1	-0.753,-1	-0.969,-2	0.149	0.106	0.597,-1
	1	-0.138,-1	-0.332,-1	0.222,-2	-0.576,-1	-0.176	0.177,-1	0.146	0.968,-1	0.765,-1
	2	-0.234,-2	0.343,-2	0.196,-2	-0.860,-2	0.176,-1	0.152,-1	0.159	0.997,-1	0.714,-1
18	3	-0.902,-2	-0.848,-2	0.109,-2	-0.500,-1	-0.651,-1	0.109,-1	0.135	0.104	0.752,-1
	4	-0.219,-1	-0.438,-2	-0.109,-2	-0.773,-1	-0.240,-1	-0.101,-1	0.151	0.900,-1	0.580,-1
	5	-0.915,-2	-0.195,-1	0.418,-3	-0.411,-1	-0.133	0.480,-2	0.145	0.856,-1	0.567,-1
	1	0.221	-0.189	0.291,-1	0.125	-0.248	0.437,-1	0.223	0.195	0.845,-1
	2	0.271	-0.175	0.206,-1	0.131	-0.194	0.280,-1	0.241	0.196	0.854,-1
19	3	0.169	-0.185	-0.137,-1	0.957,-1	-0.296	0.236,-1	0.223	0.207	0.734,-1
	4	0.382,-2	-0.190	0.196,-1	0.157,-2	-0.252	0.298,-1	0.214	0.186	0.578,-1
	5	-0.230	-0.154	0.273,-2	-0.136	-0.299	0.590,-2	0.196	0.176	0.538,-1
	1	-0.124	-0.161	0.265,-1	-0.142	-0.255	0.786,-1	0.204	0.109	0.785,-1
	2	-0.968,-1	-0.952,-1	-0.682,-2	-0.107	-0.144	-0.183,-1	0.206	0.115	0.844,-1
21	3	-0.148	-0.126	0.192,-1	-0.175	-0.228	0.603,-1	0.209	0.121	0.790,-1
	4	-0.161	-0.590,-1	-0.743,-3	-0.162	-0.107	-0.262,-2	0.204	0.105	0.580,-1
	5	-0.221	-0.156	0.125,-1	-0.254	-0.301	0.447,-1	0.190	0.102	0.608,-1
22	3	-0.122,-1	-0.223	0.263,-1	-0.129,-1	-0.340	0.662,-1	0.186	0.113	0.779,-1
	1	-0.213,-1	-0.221	0.427,-2	-0.249,-1	-0.370	0.110,-1	0.183	0.119	0.828,-1
	2	0.117,-2	-0.127	-0.241,-1	0.148,-2	-0.247	-0.715,-1	0.172	0.113	0.733,-1
23	3	0.162,-2	-0.115	-0.125,-1	0.249,-2	-0.246	-0.437,-1	0.160	0.110	0.792,-1
	4	0.148,-2	-0.237	0.177,-1	0.123,-2	-0.343	0.446,-1	0.177	0.102	0.583,-1
	5	0.328,-1	-0.158	-0.420,-3	0.360,-1	-0.305	-0.137,-2	0.169	0.100	0.570,-1
	1	0.200,-1	-0.230	0.967,-2	0.251,-1	-0.409	0.262,-1	0.169	0.111	0.784,-1
	2	0.654,-2	-0.117	0.248,-3	0.865,-2	-0.232	0.718,-3	0.167	0.114	0.759,-1
24	3	0.535,-2	-0.151	-0.404,-2	0.774,-2	-0.326	-0.139,-1	0.178	0.112	0.751,-1
	4	0.198,-1	-0.192	0.111,-2	0.183,-1	-0.308	0.346,-2	0.191	0.985,-1	0.568,-1
	5	0.531,-1	-0.138	-0.402,-2	0.704,-1	-0.279	-0.152,-1	0.169	0.900,-1	0.591,-1

	4	0.198,-1	-0.192	0.111,-2	0.183,-1	-0.308	0.940,-2	0.121	0.[illegible]	[illegible]
	5	0.531,-1	-0.138	-0.402,-2	0.704,-1	-0.279	-0.152,-1	0.169	0.900,-1	0.591,-1

TABLE 17.3 (continued)

Run No.	Anem. No.	$\overline{uv}$	$\overline{uw}$	$\overline{vw}$	R_{xy}	R_{xz}	R_{yz}	G_x	G_y	G_z
26	3	0.268	-0.170	0.277,-1	0.138	-0.248	0.438,-1	0.220	0.204	0.715,-1
	4	0.394	-0.207	-0.126,-1	0.185	-0.316	-0.246,-1	0.230	0.180	0.533,-1
27	1	-0.222	0.558	-0.171	-0.133	0.304	-0.131	0.239	0.171	0.188
	2	-0.202	0.113	-0.141,-1	-0.131	0.171	-0.245 -1	0.199	0.174	0.745,-1
	3	-0.119	-0.139	-0.240,-1	-0.869,-1	-0.285	-0.484,-1	0.193	0.196	0.699,-1
28	1	0.207,-1	-0.277,-1	0.396,-2	0.130	-0.237	0.614,-1	0.197	0.109	0.794,-1
	2	-0.267,-1	0.200,-1	-0.104,-2	-0.200	0.184	-0.192,-1	0.183	0.911,-1	0.741,-1
	3	0.250,-2	-0.247,-1	-0.814,-3	0.183,-1	-0.270	-0.156,-1	0.197	0.112	0.751,-1
	4	0.461,-2	-0.293,-1	-0.250,-2	0.306,-1	-0.284	-0.521,-1	0.191	0.887,-1	0.606,-1
	5	-0.746,-2	-0.142,-1	-0.178,-2	-0.536,-1	-0.143	-0.348,-1	0.167	0.861,-1	0.614,-1
32	1	-0.163,-1	-0.911,-3	-0.143,-2	-0.169	-0.125,-1	-0.694,-1	0.262	0.739,-1	0.560,-1
	2	0.385,-1	0.128,-4	0.433,-3	0.411	0.211,-3	0.249,-1	0.263	0.755,-1	0.488 -1
	3	0.246,-2	-0.507,-2	-0.862,-3	0.273,-1	-0.787,-1	-0.465,-1	0.258	0.741,-1	0.5 ,-1
	4	-0.141,-2	-0.578,-2	-0.621,-3	-0.171,-1	-0.108	-0.467,-1	0.259	0.641,-1	0.416,-1
	5	-0.119,-1	-0.153,-1	0.146,-2	-0.123	-0.240	0.842,-1	0.237	0.643,-1	0.424,-1
35s	1	0.704,-1	-0.643,-1	-0.206,-2	0.201	-0.267	-0.138,-1	0.176	0.109	0.749,-1
	2	0.919,-1	0.407,-1	0.603,-2	0.306	0.214	0.564,-1	0.178	0.100	0.635,-1
	3	0.492,-1	-0.597,-1	-0.331,-2	0.189	-0.298	-0.298,-1	0.177	0.980,-1	0.753,-1
	4	0.762,-1	-0.615,-1	-0.402,-3	0.248	-0.292	-0.368,-2	0.176	0.914,-1	0.628,-1
	5	0.928,-1	-0.724,-1	-0.366,-2	0.260	-0.319	-0.334,-1	0.185	0.893,-1	0.569,-1
35	1	0.357,-2	-0.918,-2	0.195,-2	0.561,-1	-0.250	0.617,-1	0.134	0.115	0.564,-1
	2	0.177,-1	0.247,-2	-0.502,-3	0.341	0.109	-0.279,-1	0.137	0.108	0.472,-1
	3	0.393,-2	-0.639,-2	-0.137,-3	0.792,-1	-0.311	-0.819,-1	0.131	0.107	0.442,-1
	4	0.217,-2	-0.115,-1	-0.822,-3	0.291,-1	-0.289	-0.263,-1	0.137	0.108	0.572,-1
	5	0.113,-1	-0.836,-2	0.482,-3	0 112	-0.334	0.164,-1	0.132	0.154	0.384,-1
37	1	0.237,-1	-0.114	-0.106,-1	0.423,-1	-0.285	-0.398,-1	0.173	0.114	0.819,-1
	2	0.157,-1	0.722,-1	0.634,-2	0.405,-1	0.275	0.349,-1	0.155	0.107	0.729,-1
	3	-0.446,-1	-0.786,-1	-0.650,-2	-0.111	-0.294	-0.367,-1	0.159	0.106	0.702,-1
	4	-0.573,-1	-0.139	-0.536,-2	-0.102	-0.304	-0.203,-1	0.166	0.952,-1	0.781,-1
	5	-0.376,-1	-0.130	0.421,-2	-0.661,-1	-0.400	0.222,-1	0.169	0.983,-1	0.562, 1
38	1	-0.195,-1	-0.291,-1	0.108,-2	-0.390,-1	-0.739,-1	0.466,-2	0.180	0.106	0.833,-1
	2	-0.176,-1	0.751,-1	-0.230,-2	-0.490,-1	0.329	-0.163,-1	0.171	0.106	0.674,-1
	3	-0.208,-1	-0.823,-1	0.631,-2	-0.517,-1	-0.285	0.357,-1	0.173	0.106	0.758,-1
	4	0.130,-2	-0.123	-0.147,-1	0.284,-2	-0.325	-0.639,-1	0.168	0.950,-1	0.784,-1
	5	-0.208,-1	-0.843,-1	0.939,-2	-0.664,-1	-0.325	0.658,-1	0.167	0.916,-1	0.590,-1

TABLE 17.3 (continued)

Run No.	Anem. No.	$\overline{uv}$	$\overline{uw}$	$\overline{vw}$	R_{xy}	R_{xz}	R_{yz}	G_x	G_y	G_z
	1	0.208	0.143,-1	0.123,-1	0.761	0.143	0.202	0.298	0.182	0.633,-1
	2	0.169	-0.422,-2	-0.495,-2	0.787	-0.684,-1	-0.127	0.285	0.181	0.520,-1
39	3	0.222	-0.713,-2	-0.691,-3	0.841	-0.998,-1	-0.141,-1	0.296	0.202	0.546,-1
	4	0.175	0.108,-2	-0.192,-2	0.708	0.106,-1	-0.348,-1	0.293	0.158	0.653,-1
	5	0.153	-0.115,-1	-0.171,-2	0.689	-0.174	-0.560,-1	0.279	0.129	0.384,-1
	1	-0.208,-1	-0.714,-1	0.531,-2	-0.307,-1	-0.385	0.408,-1	0.139	0.975,-1	0.702,-1
	2	0.256,-2	0.471,-1	0.305,-2	0.136,-1	0.345	0.351,-1	0.136	0.863,-1	0.626,-1
41	3	-0.641,-3	-0.699,-1	0.200,-2	-0.318,-2	-0.419	0.192,-1	0.137	0.857,-1	0.709,-1
	4	0.120,-1	-0.677,-1	0.883,-4	0.518,-1	-0.365	0.740,-3	0.123	0.793,-1	0.635,-1
	5	-0.717,-2	-0.649,-1	0.460,-3	-0.272,-1	-0.373	0.472,-2	0.142	0.796,-1	0.527,-1
	1	0.149	-0.159	0.191,-1	0.174	-0.301	0.482,-1	0.156	0.117	0.719,-1
	2	0.187	0.107	0.108,-1	0.252	0.224	0.349,-1	0.167	0.108	0.698,-1
42	3	0.688,-1	-0.166	0.122,-1	0.883,-1	-0.311	0.336,-1	0.166	0.113	0.773,-1
	4	-0.384,-1	-0.114	0.348,-2	-0.431,-1	-0.189	0.918,-2	0.152	0.959,-1	0.651,-1
	5	0.772,-1	-0.114	0.740,-3	0.928,-1	-0.228	0.265,-2	0.164	0.912,-1	0.547,-1
	1	0.380	-0.127	0.204,-1	0.227	-0.233	0.395,-1	0.233	0.245	0.798,-1
	2	0.264	0.116	-0.198,-1	0.198	0.266	0.436,-1	0.230	0.241	0.788,-1
43	3	0.228	-0.139	0.410,-1	0.159	-0.288	0.768,-1	0.175	0.161	0.746,-1
	4	0.304	-0.159	0.109,-1	0.158	-0.283	0.176,-1	0.225	0.248	0.723,-1
	5	0.426	-0.113	0.423,-1	0.231	-0.231	0.790,-1	0.212	0.230	0.613,-1
	1	0.159	-0.137	0.104,-3	0.708,-1	-0.235	0.182,-3	0.227	0.305	0.794,-1
	2	0.813,-1	0.106	-0.380,-1	0.460,-1	0.223	-0.620,-1	0.222	0.286	0.767,-1
44	3	0.273	0.151,-1	-0.195,-1	0.836,-1	0.196,-1	-0.184,-1	0.232	0.319	0.753,-1
	4	0.338,-1	-0.298,-1	-0.487,-1	0.184,-1	-0.513,-1	-0.638,-1	0.225	0.288	0.909,-1
	5	-0.431	-0.194	0.621,-1	-0.178	-0.291	0.986,-1	0.250	0.235	0.652,-1
	1	-0.464,-1	-0.130	0.149,-1	-0.803,-1	-0.315	0.399,-1	0.183	0.166	0.745,-1
45	2	-0.125,-1	0.570,-1	-0.267,-2	-0.147,-1	0.156	-0.778,-2	0.177	0.166	0.717,-1
	4	-0.171	-0.103,-1	-0.229,-2	-0.224	-0.280,-1	-0.701,-2	0.177	0.157	0.757,-1
	5	0.609,-1	-0.163	0.528,-2	0.575,-1	-0.362	0.165,-1	0.185	0.131	0.557,-1
	1	0.135	-0.838,-1	0.675,-2	0.197	-0.253	0.247,-1	0.178	0.147	0.713,-1
	2	0.116	0.133	0.656,-2	0.178	0.375	0.263,-1	0.194	0.136	0.744,-1
46	3	0.469,-1	-0.216,-1	-0.196,-2	0.769,-1	-0.684,-1	-0.729,-2	0.182	0.155	0.800,-1
	4	0.281	-0.218,-1	-0.115,-1	0.317	-0.524,-1	-0.405,-1	0.195	0.133	0.624,-1
	5	0.258	-0.608,-1	0.585,-2	0.258	-0.134	0.212,-1	0.205	0.124	0.561,-1

TABLE 17.3 (continued)

Run No.	Anem. No.	$\overline{uv}$	$\overline{uw}$	$\overline{vw}$	R_{xy}	R_{xz}	R_{yz}	G_x	G_y	G_z
	1	0.658,-2	-0.370,-2	0.573,-3	0.160	-0.149	0.415,-1	0.992,-1	0.647,-1	0.398,-1
	2	0.504,-2	-0.141,-2	-0.772,-3	0.286	-0.109	-0.872,-1	0.835,-1	0.567,-1	0.415,-1
53	3	0.858,-2	-0.195,-2	-0.722,-3	0.257	-0.182	-0.783,-1	0.104	0.689,-1	0.306, 1
	4	0.137,-1	-0.536,-2	-0.279,-2	0.338	-0.355	-0.318	0.103	0.622,-1	0.324,-1
	5	0.115,-1	-0.802,-3	-0.660,-4	0.380	-0.306,-1	-0.492,-2	0.102	0.524,-1	0.334,-1
	1	0.385,-1	-0.489,-1	0.162,-1	0.125	-0.302	0.181	0.149	0.993,-1	0.779,-1
	2	0.459,-1	0.313,-1	0.108,-1	0.238	0.291	0.116	0.160	0.956,-1	0.740,-1
54	3	0.257,-1	-0.496,-1	-0.540,-2	0.118	-0.318	-0.546,-1	0.156	0.100	0.705,-1
	4	0.272,-1	-0.519,-1	0.254,-2	0.962,-1	-0.287	0.234,-1	0.159	0.888,-1	0.610,-1
	5	0.149,-1	-0.394,-1	0.242,-2	0.770,-1	-0.316	0.319,-1	0.137	0.832,-1	0.636,-1
	1	0.199,-1	-0.936,-1	0.680,-2	0.478,-1	-0.310	0.306,-1	0.138	0.101	0.736,-1
	2	0.114,-1	0.692,-1	0.154,-1	0.189,-1	0.159	0.594,-1	0.167	0.102	0.740,-1
55	3	0.124	-0.821,-1	-0.983,-2	0.231	-0.208	-0.486,-1	0.149	0.103	0.755,-1
	4	-0.910,-2	-0.160	0.168,-1	-0.112,-1	-0.319	0.605,-1	0.179	0.995,-1	0.613,-1
	5	-0.699,-1	-0.235	0.109,-1	-0.857,-1	-0.397	0.248 -1	0.174	0.129	0.608,-1
	1	-0.726,-1	-0.349,-1	0.239,-1	-0.142	-0.119	0.861,-1	0.157	0.119	0.856,-1
	2	-0.359,-1	0.372,-1	-0.247,-2	-0.920,-1	0.157	-0.160,-1	0.160	0.126	0.761,-1
56	3	-0.268,-3	0.745,-3	0.840,-2	-0.371,-3	0.207,-2	0.288,-1	0.177	0.144	0.716,-1
	4	-0.742,-1	0.137,-1	-0.176,-1	-0.150	0.499,-1	-0.810,-1	0.170	0.134	0.743,-1
	5	0.214,-1	-0.124	0.196,-1	0.279,-1	-0.320	0.828,-1	0.189	0.116	0.585,-1
	1	-0.366,-2	-0.122,-1	-0.111,-2	-0.756,-1	-0.392	-0.403,-1	0.100	0.889,-1	0.572,-1
	2	-0.491,-2	0.228,-2	0.819,-3	-0.955,-1	0.150	0.258,-1	0.948,-1	0.126	0.371,-1
58	3	-0.168,-3	0.127,-2	0.464,-3	-0.365,-2	0.587,-1	0.225,-1	0.101	0.960,-1	0.327,-1
	4	0.145,-3	0.387,-3	-0.345,-3	0.349,-2	0.224,-1	-0.216,-1	0.935,-1	0.909,-1	0.378,-1
	5	-0.520,-2	-0.114,-1	0.797,-3	-0.508,-1	-0.341	0.269,-1	0.115	0.102	0.334,-1
	1	-0.837,-2	-0.258,-1	-0.420,-3	-0.815,-1	-0.307	-0.806,-2	0.151	0.125	0.770,-1
	2	0.176,-3	0.141,-1	0.138,-2	0.150,-1	0.320	0.329,-1	0.151	0.133	0.502,-1
59	3	-0.753,-2	-0.297,-3	0.329,-2	-0.561,-1	-0.584,-2	0.442,-1	0.122	0.124	0.466,-1
	4	-0.503,-2	-0.107,-2	-0.362,-2	-0.502,-1	-0.198,-1	-0.107	0.157	0.976,-1	0.529,-1
	5	-0.416,-2	-0.154,-1	-0.167,-2	-0.291,-1	-0.372	-0.273,-1	0.963,-1	0.143	0.414,-1
	1	0.155,-1	-0.806,-1	0.344,-2	0.492,-1	-0.307	0.226,-1	0.156	0.900,-1	0.749,-1
	2	0.369,-1	0.238,-1	0.263,-2	0.122	0.114	0.198,-1	0.158	0.100	0.692,-1
60	3	0.327,-1	0.314,-2	-0.123,-1	0.981,-1	0.112,-1	-0.663,-1	0.161	0.106	0.616,-1
	4	0.140,-1	-0.750,-2	-0.530,-3	0.284,-1	-0.262,-1	-0.244,-1	0.173	0.131	0.762,-1
	5	-0.120,-1	-0.112	0.558,-2	-0.174,-1	-0.324	0.340,-1	0.174	0.117	0.588,-1

TABLE 17.3 (continued)

Run No.	Anem. No.	$\overline{uv}$	$\overline{uw}$	$\overline{vw}$	R_{xy}	R_{xz}	R_{yz}	G_x	G_y	G_z
61	1	-0.199	-0.429,-1	0.135,-1	-0.116	-0.694,-1	0.171,-1	0.154	0.196	0.706,-1
	2	-0.166	0.503,-1	0.133,-2	-0.965,-1	0.883,-1	0.186,-2	0.165	0.207	0.687,-1
62	1	-0.249,-1	-0.941,-1	-0.383,-1	-0.304,-1	-0.219	-0.125	0.198	0.142	0.746,-1
	2	-0.326,-1	0.964,-1	0.236,-1	-0.401,-1	0.254	0.796,-1	0.201	0.157	0.736,-1
	3	0.114	-0.190,-1	0.618,-2	0.128	-0.468,-1	0.207,-1	0.192	0.141	0.645,-1
	4	-0.167	0.541,-2	-0.126,-1	-0.234	0.135,-1	-0.484,-1	0.201	0.130	0.734,-1
	5	-0.122,-1	-0.114	0.237,-2	-0.156,-1	-0.393	0.942,-2	0.180	0.121	0.579,-1
65	1	-0.323,-1	-0.775,-1	-0.497,-2	-0.563,-1	-0.245	-0.194,-1	0.176	0.143	0.786,-1
	2	-0.575,-2	0.795,-1	0.601,-2	-0.143,-1	0.321	0.345,-1	0.173	0.121	0.750,-1
	3	-0.529,-1	-0.663,-1	0.794,-2	-0.119	-0.338	0.399,-1	0.155	0.158	0.698,-1
	5	-0.259,-1	-0.700,-1	0.1[illegible],-3	-0.367,-1	-0.273	0.458,-3	0.176	0.155	0.565,-1
66	1	0.440,-2	-0.287,-1	0.343,-2	0.195,-1	-0.261	0.240,-1	0.113	0.147	0.716,-1
	2	0.951,-2	0.271,-1	0.204,-2	0.399,-1	0.356	0.181,-1	0.127	0.189	0.603,-1
	3	-0.295,-1	-0.242,-1	0.294,-2	-0.108	-0.320	0.211,-1	0.122	0.225	0.621,-1
	4	0.664,-1	-0.308,-1	-0.136,-2	0.141	-0.304	-0.883,-2	0.152	0.235	0.508,-1
	5	0.506,-1	-0.315,-1	-0.105,-1	0.113	-0.309	-0.877,-1	0.147	0.224	0.511,-1
67	1	0.138	-0.102	-0.959,-2	0.871,-1	-0.172	-0.147,-1	0.195	0.315	0.804,-1
	2	-0.408,-2	0.877,-1	0.102,-1	-0.471,-2	0.243	0.402,-1	0.234	0.165	0.686,-1
	3	0.263	-0.129,-1	-0.140,-2	0.189	-0.341,-1	-0.304,-2	0.190	0.232	0.632,-1
	4	0.814,-1	-0.225,-1	-0.373,-3	0.892,-1	-0.705,-2	-0.312,-2	0.208	0.183	0.639,-1
	5	0.165	-0.973,-2	0.480,-2	0.114	-0.318	0.101,-1	0.168	0.262	0.555,-1
68	1	-0.204,-2	-0.257,-1	0.169,-2	-0.563,-2	-0.223	0.100,-1	0.174	0.254	0.805,-1
	2	-0.343,-1	0.214,-1	0.687,-3	-0.110	0.261	0.647,-2	0.188	0.243	0.613,-1
	3	-0.200	-0.109,-3	-0.528,-3	-0.372	-0.924,-3	-0.304,-2	0.202	0.297	0.651,-1
	4	-0.109	-0.462,-2	0.619,-2	-0.241	-0.504,-1	0.401,-1	0.188	0.316	0.642,-1
	5	0.833,-1	-0.262,-1	0.154,-2	0.160	-0.255	0.100,-1	0.188	0.280	0.554,-1

TABLE 17.4 Cross-correlation coefficients identified by run number, eddy wind component, and separation distances of anemometer pairs.

Run No.	Compo-nent	SEPARATION DISTANCE (m) 6	12	18	24	36	42	48	72	84	90
6	u	.673	.490	.494	.419	.371	.353	.245	.118	.131	.147
	v	.702	.547	.585	.683	.530	.548	.495	.487	.456	.458
	w	.163	.875,-2	.182,-1	.173,-1	-.125,-1	-.136,-1	.398,-1	-.248,-1	-.536,-1	.596, 1
7	u	.860	.799	.772	.684	.649	.632	.577	.481	.445	.456
	v	.908	.350	.810	.795	.744	.727	.676	.597	.550	.541
	w	.110	.148,-1	.619,-1	-.457,-2	-.755,-2	.496,-2	-.238,-2	.300,-3	-.366,-1	-.486,-1
8	u	.697	.647	.584	.623	.591	.560	.437	.476	.443	.421
	v	.873	.833	.815	.779	.724	.744	.691	.640	.632	.647
	w	-.278,-1	-.453,-1	-.104,-1	.270,-1	-.254,-2	-.355,-1	-.535,-2	-.363,-1	-.349,-1	-.180,-1
10	u	.801	.800	.720	.795	.759	.699	.652	.592	.541	.507
	v	.842	.807	.743	.763	.691	.670	.666	.585	.582	.546
	w	.121,-1	.161,-1	.246,-1	.210,-1	-.547,-1	.360,-1	-.177,-2	-.582,-1	.211,-1	.116,-1
13	u	.932	.918	.911	.906	.919	.927	.892	.865	.891	.896
	v	.875	.876	.897	.915	.893	.924	.766	.745	.756	.736
	w	.751,-1	-.106,-1	.405,-1	.517,-1	.355,-2	.249,-1	.276,-1	.116	.203	-.749,-1
15	u	.404	.228	.303	.246	.136	.125	.160	.147	.210	.159
	v	.759	.655	.559	.633	.452	.359	.469	.316	.240	.211
	w	-.266,-1	-.732,-1	.555,-2	.255,-1	-.660,-2	-.468,-1	.395,-1	.568,-3	.516,-1	-.206,-2
16	u	.798	.733	.696	.587	.516	.498	.494	.332	.318	.295
	v	.837	.846	.833	.808	.753	.764	.694	.660	.625	.655
	w	.127	.124	.198	.753,-1	.986,-2	.181,-1	.340,-2	.506,-2	.149,-1	-.165,-1
17	u	.537	.413	.287	.268	.172	.110	.144	.683,-1	.472,-1	.567,-1
	v	.155	.471,-1	.144	.825,-1	.697,-1	.759,-1	.105	.101	.162	.241
	w	.383,-1	-.209,-2	.269,-1	-.446,-1	-.507,-1	-.476,-1	.158,-1	-.305,-1	.722,-2	.349,-2
18	u	.512,-1	.788,-1	.186	.996,-1	.136	.754,-1	.156	.486,-1	.146	.164
	v	.270	.290	.280	.302	.307	.258	.229	.252	.246	.238
	w	-.455,-1	-.608,-1	.284,-1	-.508,-1	-.570,-2	-.783,-2	-.272,-1	-.967,-2	.282,-1	.259,-1
19	u	.627	.487	.389	.480	.497	.409	.402	.276	.272	.234
	v	.711	.676	.619	.583	.510	.451	.440	.309	.253	.217
	w	-.965,-2	-.265,-1	-.242,-1	.861,-2	.173,-1	.297,-1	.373,-1	.653,-2	-.448,-1	-.805,-1
21	u	.806	.709	.626	.528	.483	.469	.433	.358	.363	.370
	v	.453	.398	.325	.321	.241	.192	.298	.243	.191	.260
	w	.490,-1	.655,-3	.507,-1	.413,-1	-.137,-1	.277,-1	-.330,-1	.350,-1	.111,-2	-.369,-1

TABLE 17.4 (continued)

Run No.	Compo-nent	SEPARATION DISTANCE 6	12	18	24	36	42	48	72	84	90
	u	.417	.260	.229	.466,-1	.113	.124	.105	-.955,-2	.337,-1	.374,-1
23	v	.403	.242	.183	.177	.898,-1	.101	.665,-1	-.424,-1	.117,-1	.402,-1
	w	-.633,-1	-.286,-1	.670,-2	.153,-1	.101,-1	.157,-1	-.532,-1	-.357,-1	-.260,-1	.154,-1
	u	.329	.183	.689,-1	.127	.556,-1	.446,-1	.591,-1	-.286,-2	-.944,-1	-.317,-1
24	v	.413	.289	.176	.141	.751,-1	.969,-1	.773,-2	.491,-1	.675,-1	.397,-1
	w	.476,-1	.363,-3	.304,-1	-.395,-1	.831,-2	.538,-1	-.301,-1	-.878,-2	.886,-2	.771,-1
	u	.555	.410	.398							
27	v	.691	.630	.539							
	w	.673,-1	.192,-1	.431,-1							
	u	.446	.391	.363	.336	.291	.290	.219	.264	.251	.238
28	v	.156	.102	.194	.967,-1	.321,-1	.119	.719,-1	.685,-1	.715,-1	.990,-1
	w	.444,-1	.623,-1	-.352,-1	-.574,-1	-.369,-1	-.369,-1	-.807,-2	-.241,-1	-.769,-2	.162,-1
	u	.858	.851	.868	.847	.830	.830	.852	.846	.830	.852
32	v	.902,-1	.153	.128	.129	.716,-1	.124	.104	.426,-1	.738,-1	.935,-1
	w	.236,-1	-.466,-1	-.264,-1	.379,-1	.471,-1	-.652,-1	-.333,-1	-.277,-1	-.347,-1	.811,-2
	u	.327	.365	.328	.370	.443	.303	.363	.365	.406	.327
35s	v	.331	.234	.165	.242	.265	.229	.235	.172	.231	.160
	w	.210,-1	-.228,-	-.297,-1	-.275,-1	-.269,-1	.143,-1	-.370,-1	.851,-2	-.117,-1	-.215,-1
	u	.345	.427	.354	.334	.281	.272	.861,-1	.718,-1	.675,-1	.617,-1
36	v	.537	.505	.468	.395	.464	.386	.186	.224	.235	.173
	w	-.229,-1	.118,-1	-.605,-3	-.468,-1	-.265,-1	-.653,-1	-.452,-1	.895,-2	-.638,-2	.135,-1
	u	.109	.406,-1	.448,-1	.594,-1	-.410,-1	-.799,-2	-.124,-1	.147	-.646,-1	.106
37	v	.279	.168	.160	.133	.144	.166	.209	.208	.114	.823,-1
	w	.194,-1	-.296,-1	.115,-1	.395,-1	-.323,-2	.528,-1	.574,-1	-.149,-1	-.822,-1	.605,-1
	u	.132	-.330,-1	-.673,-2	.272,-1	.229,-1	.806,-2	.991,-1	.123	.610,-1	-.922,-1
38	v	.747,-1	.276,-1	.542,-1	.332,-1	.921,-2	.154,-1	.642,-1	.519,-1	.347,-1	.532,-1
	w	.215,-1	-.150,-2	-.482,-1	.180,-1	-.218,-1	.535,-1	.479,-1	-.202,-1	.350,-1	.286,-1
	u	.844	.849	.858	.840	.830	.855	.834	.842	.827	.847
39	v	.817	.861	.830	.825	.787	.759	.737	.794	.749	.731
	w	-.265,-1	.299,-1	.657,-1	.375,-1	-.325,-1	-.192,-1	.203,-1	.111,-1	-.151,-1	-.994,-2
	u	-.451,-1	.540,-1	-.124,-1	.865,-1	.637,-1	.456,-1	.454,-1	.609,-1	-.234,-1	-.156,-1
41	v	.849,-1	.855,-1	.120	.230,-1	.380,-1	.566,-1	.225,-1	.457,-1	.507,-1	.717,-1
	w	.618,-2	.131,-2	.371,-2	.322,-1	.715,-1	.367,-1	.191,-1	-.940,-2	-.113,-1	.415,-1
	u	.256	.131	.861,-1	-.723,-2	.418,-1	.343,-1	.144,-1	.414,-1	.924,-1	.385,-1
42	v	.365	.168	.142	.359,-1	.108	.998,-1	.792,-1	.991,-1	.127	.611,-1
	w	.805,-1	-.197,-1	-.398,-2	-.247,-2	-.602,-1	.221,-1	-.155,-1	-.394,-1	.696,-2	.143,-2

TABLE 17.4 (continued)

Run No.	Component	SEPARATION DISTANCE 6	12	18	24	36	42	48	72	84	90
	u	.815,-2	.673	.519	.607	.524	.532	.416	.360	.361	.365
43	v	.898	.814	.794	.766	.708	.690	.714	.632	.627	.598
	w	-.159	-.512,-1	.760,-1	.554,-1	-.222,-1	.213,-1	.303,-1	.409,-1	-.462,-1	.363,-1
	u	.396	.310	.251	.204	.203	.194	.293	.149	.159	.203
46	v	.596	.519	.492	.538	.494	.508	.521	.484	.463	.488
	w	.487,-1	.336,-1	.186,-2	.201,-1	-.168,-1	.362,-1	-.432,-1	.129,-1	-.165,-1	-.320,-1
	u	.164	.958,-1	.113	.908,-1	.556,-1	.108	.114	.965,-1	.885,-1	.120
54	v	.272	.133	.954,-1	.158	.113	.125	.581,-1	.925,-1	.899,-1	.659,-1
	w	.326,-1	.438,-1	-.263,-1	-.191,-1	.377,-1	.129,-1	.130,-1	.398,-2	-.196,-1	-.979,-2
	u	.475	.284	.234	.169	.926,-1	-.476,-2	.174	.126	.908,-3	.782,-1
55	v	.431	.496	.354	.617,-1	.674,-1	.189,-1	.122	.128	.845,-1	.393,-1
	w	-.804,-3	-.317,-1	-.141,-1	-.242,-1	.145,-1	-.288,-1	-.587,-1	.123,-1	.759,-2	.480,-1
	u	.542	.393	.322					.176	.476,-1	.860,-2
65	v	.145	.196	.128					.690,-1	.363,-1	.638,-2
	w	-.431,-1	.250,-1	.169,-1					-.[illegible]3,-1	.618,-[illegible]	.183,-1
	u	.177	.154	.841,-1	.177	.727,-1	.121	.548,-1	.156	.112	.113
66	v	.306	.289	.306	.279	.308	.318	.152	.196	.177	.153
	w	-.182,-1	.116,-1	.143,-3	-.647,-2	-.290,-2	.102	-.310,-1	.386,-1	-.497,-1	-.205,-1

Run No.	Component	SEPARATION DISTANCE 1	4	5	16	20	21	64	80	84	85
	u	.879	.515	.515	.316	.376	.343	.959,-1	.407	.311	.325
44	v	.969	.889	.882	.582	.572	.567	.394	.557	.511	.505
	w	-.375	-.281,-1	.269,-1	.307,-1	-.174,-1	.190,-1	.415,-1	-.285,-1	-.934,-2	-.111,-1
	u	.835				.471	.356	.999,-1		.498,-1	.106,-1
45	v	.793				.573	.567	.367		.331	.347
	w	-.158				.510,-2	.269,-3	.995,-2		.241,-1	.377,-1
	u	.284	.287	.256	.234	.283	.242	.320	.369	.236	.314
53	v	.682	.401	.404	.427	.393	.352	.333	.233	.271	.247
	w	-.479,-1	-.652,-2	.501,-1	-.178,-1	.696,-1	-.689,-1	.791,-2	.488,-1	-.588,-3	.681,-2
	u	.796	.916,-1	.133	.533,-1	.245	.174	.145	.511,-1	.491,-1	.945,-2
56	v	.662	.539	.527	.451	.430	.435	.413	.357	.378	.394
	w	-.189	-.235,-1	-.101,-1	-.319,-1	.311,-1	-.559,-2	.180,-1	.182,-2	-.131,-1	-.353,-1
	u	.170	.474,-1	.749,-1	-.404,-1	-.212,-1	.337,-1	.703,-1	.488,-3	.120	.400,-1
58	v	.148	.111	.691,-1	.541,-1	.493,-1	-.601,-2	.354,-1	.614,-1	.424,-1	.634,-1
	w	-.215,-1	-.143,-1	.701,-1	-.599,-2	-.937,-2	-.363,-1	.150,-1	-.229,-1	.255,-1	.946,-2

TABLE 17.4 (continued)

Run No.	Component	SEPARATION DISTANCE 1	4	5	16	20	21	64	80	84	85
	u	.344	.946,-2	.122,-1	.818,-1	.356,-1	.921,-1	.117	.463,-1	.892,-2	-.359,-1
59	v	.208	.755,-1	.386,-1	.737,-1	.568,-1	.256,-1	.101	.219,-1	.531,-1	.445,-1
	w	-.433,-1	-.142,-1	.148,-1	.489,-1	-.413,-1	-.373,-3	.214,-1	.676,-1	.150,-1	.547,-1
	u	.765	.645,-1	.545,-1	.102	.305	.192	.283,-1	.141	.129	.129
60	v	.272	.893,-1	.116	.156,-1	.447,-2	.463,-2	.449,-1	.237,-1	.230,-1	.121,-1
	w	-.103	.250,-1	-.491,-1	.592,-1	-.163,-1	.164,-1	-.217,-1	-.234,-1	-.209,-1	.299,-1
	u	.874	.335	.359	.376	.659	.625	.168	.299	.148	.153
62	v	.770	.584	.599	.288	.210	.240	.163,-1	-.510,-1	-.434,-1	-.587,-1
	w	-.394	-.686,-1	-.473,-2	.297,-2	.105,-2	.113,-1	.192,-1	-.172,-1	-.197,-1	.693,-2
	u	.492	.413,-1	.715,-1	.980,-1	.167	.102	-.356,-1	.750,-1	.498,-1	.180,-1
67	v	.147	.161	.222	.269	.760,-1	.185	.276	.290	-.939,-2	.185
	w	-.281	.157,-1	-.107	.133,-1	.819,-2	-.146,-1	-.212,-1	.218,-1	-.186,-2	-.525,-1
	u	.736	.475	.524	.520	.448	.450	.425	.417	.394	.415
68	v	.220	.182	.765,-1	.218	.584,-1	-.238,-1	-.286,-1	-.274,-1	-.250,-1	.122
	w	-.136	.486,-1	-.433,-1	-.393,-1	-.675,-1	-.983,-2	-.941,-3	.234,-1	.331,-2	.412,-1

TABLE 17.5

Auto-correlation coefficients identified by eddy wind components; lag number, K; and anemometer number. (Pages 156 to 287.) To convert K to a time lag, multiply by $\Delta t = 1.067$ seconds.

Run No. 05; u component

	Anemometer Position Number				
k	1	2	3	4	5
00			1.000	1.000	
01			.790	.792	
02			.659	.673	
03			.594	.614	
04			.548	.575	
05			.510	.519	
06			.491	.479	
07			.456	.454	
08			.443	.416	
09			.414	.396	
10			.397	.378	
11			.380	.360	
12			.367	.361	
13			.352	.351	
14			.340	.338	
15			.321	.319	
16			.313	.301	
17			.293	.282	
18			.283	.267	
19			.291	.269	
20			.283	.269	
21			.280	.275	
22			.275	.272	
23			.267	.277	
24			.250	.269	
25			.248	.267	
26			.246	.257	
27			.258	.245	
28			.276	.235	
29			.275	.230	
30			.281	.214	
31			.274	.201	
32			.270	.190	
33			.257	.184	
34			.270	.194	
35			.271	.183	
36			.264	.178	
37			.255	.170	
38			.250	.157	
39			.267	.156	
40			.264	.126	
41			.270	.135	
42			.272	.121	
43			.257	.111	
44			.258	.111	
45			.215	.113	
46			.261	.100	
47			.193	.994,-1	
48			.196	.106	
49			.197	.107	
50			.200	.128	
51			.188	.147	
52			.163	.172	
53			.158	.147	
54			.141	.125	
55			.125	.104	
56			.130	.109	
57			.134	.956,-1	
58			.134	.660,-1	
59			.143	.470,-1	
60			.146	.198,-1	

Run No. 05: v component

	Anemometer Position Number				
X	1	2	3	4	5
00			1.000	1.000	
01			.8[illegible]	.875	
02			.7[illegible]	.832	
03			.7[illegible]	.7[illegible]	
04			.724	.761	
05			.6[illegible]1	.726	
06			.658	.707	
07			.64[illegible]	.67[illegible]	
08			.61[illegible]	.647	
09			.584	.6[illegible]	
10			.547	.6[illegible]	
11			.534	.5[illegible]	
12			.510	.576	
13			.514	.554	
14			.507	.5[illegible]	
15			.505	.5[illegible]4	
16			.4[illegible]	.554	
17			.488	.54[illegible]	
18			.491	.5[illegible]	
19			.480	.543	
20			.492	.543	
21			.486	.541	
22			.482	.534	
23			.476	.522	
24			.478	.517	
25			.464	.512	
26			.461	.505	
27			.436	.498	
28			.439	.482	
29			.440	.475	
30			.438	.470	
31			.425	.457	
32			.402	.441	
33			.393	.428	
34			.370	.401	
35			.3[illegible]	.468	
36			.357	.465	
37			.345	.401	
38			.341	.3[illegible]	
39			.3[illegible]	.3[illegible]	
40			.322	.3[illegible]	
41			.31[illegible]	.3[illegible]	
42			.318	.385	
43			.322	.390	
44			.33[illegible]	.392	
45			.327	.400	
46			.326	.399	
47			.32[illegible]	.398	
48			.324	.397	
49			.31[illegible]	.390	
50			.326	.397	
51			.327	.391	
52			.315	.391	
53			.313	.383	
54			.305	.386	
55			.305	.382	
56			.305	.379	
57			.306	.367	
58			.292	.361	
59			.305	.352	
60			.308	.343	

Run No. 05; w component

	Anemometer Position Number				
P	1	2	3	4	5
00			1.000	1.000	
01			.10	.154	
02			.385,-1	.133	
03			.5e1,-1	.307,-1	
04			.514,-1	.192	
05			.200,-1	.101,-1	
06			.5e1,-1	.100,-1	
07			.3e6,-1	.353,-1	
08			.100,-1	.192,-1	
09			-.833,-1	-.155,-2	
10			.42e,-1	.439,-1	
11			.104,-1	.474,-1	
12			.289,-1	.511,-1	
13			-.e4,-2	.150,-1	
14			.220,-1	.440,-1	
15			-.305,-1	.337,-1	
16			-.302,-1	.300,-1	
17			-.e51,-2	.105,-1	
18			-.e20,-1	.554,-1	
19			.354,-1	.e00,-2	
20			-.315,-1	-.e20,-1	
21			-.370,-1	.439,-1	
22			.165,-2	.349,-	
23			.104,-1	-.e04,-1	
24			-.133,-1	-.e22,-2	
25			.464,-1	.e61,-2	
26			.175,-1	-.153,-1	
27			-.e22,-1	-.171,-1	
28			-.551,-3	.e04,-1	
29			.578,-2	.e93,-1	
30			.231,-2	.705,-1	
31			-.e44,-1	.314,-2	
32			-.122,-1	-.e0e,-1	
33			-.e00,-2	.100,-1	
34			.105,-1	.705,-2	
35			.007,-2	.e00,-1	
36			.407,-1	-.134,-1	
37			.355,-1	.205,-1	
38			-.297,-1	.102,-1	
39			.275,-1	.150,-1	
40			.302,-2	.e07,-1	
41			.111,-2	-.147,-1	
42			.749,-2	-.e98,-1	
43			.200,-1	.e22,-2	
44			-.e58,-2	.100,-1	
45			-.470,-1	-.e90,-1	
46			.102,-1	.733,-2	
47			-.323,-1	.423,-2	
48			-.105,-1	.215,-1	
49			.237,-1	-.114,-1	
50			.904,-2	.e31,-1	
51			-.276,-1	.e00,-1	
52			.770,-2	.427,-1	
53			.142,-1	.211,-1	
54			.701,-1	-.128,-1	
55			-.229,-1	-.283,-1	
56			.484,-1	-.299,-1	
57			.350,-2	.164,-2	
58			-.444,-1	-.269,-2	
59			.304,-1	-.e12,-1	
60			.754,-2	-.533.-1	

Run no. [illegible] u component

Generator position number

K	1	2	3	4	5
[illegible]	1.[illegible]	1.[illegible]	1.[illegible]	1.[illegible]	1.[illegible]
[illegible]	.[illegible]	.[illegible]	.[illegible]	.[illegible]	.[illegible]
[illegible]	.[illegible]	.[illegible]	.[illegible]	.[illegible]	.[illegible]
[illegible]	.[illegible]	.[illegible]	.[illegible]	.[illegible]	.[illegible]
[illegible]	.[illegible]	.[illegible]	.[illegible]	.[illegible]	.[illegible]
[illegible]	.[illegible]	.[illegible]	.[illegible]	.[illegible]	.[illegible]
[illegible]	.[illegible]	.[illegible]	.[illegible]	.[illegible]	.[illegible]
[illegible]	.[illegible]	.[illegible]	.[illegible]	.[illegible]	.[illegible]
[illegible]	.[illegible]	.[illegible]	.[illegible]	.[illegible]	.[illegible]
[illegible]	.[illegible]	.[illegible]	.[illegible]	.[illegible]	.[illegible]
10	.179	.17[illegible]	.[illegible],-1	.171	.17[illegible]
11	.17[illegible]	.17[illegible]	.724,-1	.17[illegible]	.17[illegible]
12	.167	.122	.[illegible]42,-1	.17[illegible]	.15[illegible]
13	.17[illegible]	.116	.482,-1	.16[illegible]	.15[illegible]
14	.146	.1[illegible]	.[illegible]54,-1	.13[illegible]	.144
15	.142	.111	.[illegible]4,-2	.11[illegible]	.1[illegible]
16	.1[illegible]	.1[illegible]	.[illegible]1,-2	.128	.[illegible],-1
17	.127	.11[illegible]	.117,-1	.1[illegible]	.[illegible],-1
18	.1[illegible]	.111	.117,-1	.1[illegible]	.[illegible],-1
19	.1[illegible]	.11[illegible]	.7[illegible]2,-2	.[illegible],-1	.[illegible],-1
20	.1[illegible]	.141	.[illegible]01,-1	.[illegible]25,-1	.[illegible],-1
21	.145	.1[illegible]	.51[illegible],-1	.[illegible],-1	.[illegible],-1
22	.1[illegible]	.1[illegible]	.[illegible]1,-1	.[illegible]45,-1	.[illegible],-1
23	.1[illegible]	.1[illegible]	.[illegible]5,-1	.[illegible]0,-1	.[illegible],-1
24	.11[illegible]	.1[illegible]	.[illegible]1,-1	.7[illegible],-1	.[illegible],-1
25	.[illegible],-1	.1[illegible]	.[illegible],-1	.[illegible]37,-1	.[illegible],-1
26	.111	.12[illegible]	.[illegible],-1	.[illegible],-1	.[illegible],-1
27	.121	.1[illegible]	.[illegible]1,-1	.[illegible]01,-1	.[illegible],-1
28	.1[illegible]	.1[illegible]	.[illegible]0,-1	.[illegible],-1	.[illegible],-1
29	.[illegible],-1	.[illegible],-1	.[illegible]6,-1	.[illegible],-1	.[illegible],-1
30	.[illegible],-1	.5[illegible],-1	.[illegible],-1	.[illegible],-1	.5[illegible],-1
31	.1[illegible]	.51[illegible],-1	.[illegible],-1	.[illegible],-1	.[illegible],-1
32	.[illegible],-1	.[illegible],-1	-.[illegible],-2	.[illegible],-1	.[illegible],-1
33	.[illegible],-1	.[illegible],-1	-.[illegible],-2	.[illegible],-1	.[illegible],-1
34	.[illegible],-1	.[illegible],-1	-.[illegible],-2	.[illegible],-1	.[illegible],-1
35	.[illegible],-1	.[illegible],-1	.[illegible],-1	.[illegible],-1	.[illegible],-1
36	.[illegible],-1	.[illegible],-1	.[illegible],-1	.[illegible],-1	.[illegible],-1
37	.[illegible],-1	.[illegible],-1	-.[illegible],-1	.[illegible],-1	.[illegible],-1
38	.[illegible],-1	.1[illegible]	.[illegible],-1	.[illegible],-1	.[illegible],-1
39	.[illegible],-1	.[illegible],-1	.[illegible],-1	.[illegible],-1	.[illegible],-1
40	.1[illegible]	.107	.[illegible],-2	.[illegible],-1	.[illegible],-1
41	.157	.1[illegible]	.[illegible],-1	.[illegible],-1	.[illegible],-1
42	.126	.12[illegible]	.[illegible],-1	.[illegible],-1	.[illegible],-1
43	.126	.12[illegible]	.[illegible],-1	.[illegible],-1	.[illegible],-1
44	.11[illegible]	.12[illegible]	.[illegible],-1	.[illegible],-1	.[illegible],-1
45	.[illegible],-1	.[illegible],-1	.[illegible],-1	.[illegible],-1	.[illegible],-1
46	.[illegible],-1	.[illegible],-1	.[illegible],-1	.[illegible],-1	.[illegible],-1
47	.[illegible],-1	.[illegible],-1	.[illegible],-1	.[illegible],-1	.[illegible],-1
48	.[illegible],-1	.[illegible],-1	.[illegible],-1	.[illegible],-1	.[illegible],-1
49	.112	.[illegible],-1	.[illegible],-1	.[illegible],-1	.[illegible],-1
50	.117	.[illegible],-1	.[illegible],-1	.[illegible],-1	.[illegible],-2
51	.119	.[illegible],-1	.[illegible],-1	.[illegible],-1	-.[illegible],-2
52	.[illegible],-1	.[illegible],-1	.[illegible],-1	.[illegible],-1	.[illegible],-2
53	.[illegible],-1	.[illegible],-1	.[illegible],-1	.[illegible],-1	-.[illegible],-2
54	.[illegible],-1	.[illegible],-1	.[illegible],-1	.[illegible],-1	-.[illegible],-1
55	.[illegible],-1	.[illegible],-1	.[illegible],-1	.[illegible],-1	-.[illegible],-1
56	.[illegible],-1	.[illegible],-1	.[illegible],-1	.[illegible],-1	-.[illegible],-1
57	.[illegible],-1	.[illegible],-1	.[illegible],-1	.[illegible],-1	-.[illegible],-1
58	.112	.[illegible],-1	.[illegible],-1	.[illegible],-1	-.[illegible],-1
59	.119	.[illegible],-1	.[illegible],-1	.[illegible],-1	-.[illegible],-1
60	.104	.[illegible],-1	.105	.[illegible],-1	-.[illegible],-1

Run No. 06; v component

K	Anemometer Position Number 1	2	3	4	5
00	1.000	1.000	1.000	1.000	1.000
01	.650	.664	.684	.729	.722
02	.594	.594	.622	.651	.639
03	.527	.543	.586	.616	.615
04	.510	.524	.550	.597	.592
05	.504	.506	.521	.559	.553
06	.497	.495	.518	.551	.550
07	.469	.468	.491	.534	.552
08	.446	.459	.472	.522	.509
09	.437	.434	.458	.487	.491
10	.418	.416	.443	.481	.512
11	.419	.419	.418	.438	.523
12	.403	.401	.416	.438	.474
13	.380	.390	.419	.422	.458
14	.354	.361	.398	.420	.427
15	.337	.364	.398	.396	.425
16	.347	.378	.389	.397	.391
17	.342	.389	.401	.387	.379
18	.373	.369	.380	.370	.367
19	.372	.360	.391	.385	.379
20	.346	.356	.387	.392	.360
21	.336	.330	.365	.370	.369
22	.320	.296	.348	.338	.362
23	.306	.292	.323	.320	.340
24	.272	.275	.323	.324	.333
25	.284	.277	.283	.282	.322
26	.276	.251	.272	.281	.301
27	.265	.262	.276	.271	.269
28	.251	.240	.284	.266	.282
29	.248	.238	.271	.257	.256
30	.228	.216	.254	.243	.246
31	.210	.196	.256	.211	.229
32	.203	.206	.224	.213	.226
33	.192	.200	.234	.206	.214
34	.216	.189	.244	.211	.234
35	.178	.180	.240	.201	.230
36	.170	.172	.244	.191	.199
37	.182	.175	.248	.185	.178
38	.186	.155	.224	.196	.173
39	.164	.163	.238	.190	.165
40	.182	.159	.221	.192	.174
41	.149	.164	.215	.175	.169
42	.160	.139	.186	.159	.164
43	.146	.144	.180	.157	.155
44	.130	.118	.195	.147	.154
45	.105	.110	.162	.132	.160
46	.103	.972,-1	.159	.104	.140
47	.842,-1	.972,-1	.149	.949,-1	.131
48	.858,-1	.753,-1	.135	.100	.127
49	.790,-1	.689,-1	.141	.613,-1	.114
50	.793,-1	.659,-1	.125	.640,-1	.111
51	.568,-1	.404,-1	.127	.566,-1	.120
52	.533,-1	.200,-1	.117	.564,-1	.935,-1
53	.616,-1	.279,-1	.115	.632,-1	.117
54	.508,-1	.622,-1	.125	.636,-1	.107
55	.511,-1	.398,-1	.891,-1	.624,-1	.118
56	.200,-1	.494,-2	.116	.679,-1	.124
57	.266,-1	.431,-1	.114	.934,-1	.137
58	.452,-1	.417,-1	.124	.939,-1	.119
59	.558,-1	.359,-1	.109	.695,-1	.105
60	.557,-1	.388,-1	.893,-1	.726,-1	.103

Run No. 06; w-component

	Anemometer Position Number				
k	1	2	3	4	5
00	1.000	1.000	1.000	1.000	1.000
01	.604,-1	-.638,-2	.406,-1	.534,-1	.427,-1
02	-.412,-1	.421,-1	.234,-1	.287,-1	.265,-1
03	.471,-1	-.171,-1	.102	.261,-2	.270,-1
04	.880,-1	.245,-1	.274,-1	.101,-1	-.908,-2
05	-.316,-1	-.845,-2	.250,-1	.197,-1	.859,-2
06	-.179,-1	.478,-2	.275,-1	-.122,-1	.510,-1	
07	-.152,-2	-.299,-1	-.264,-1	-.175,-1	.294,-1	
08	.337,-1	-.801,-2	-.134,-1	.167,-1	.471,-1	
09	-.107,-1	-.714,-2	-.260,-1	.702,-2	.546,-1	
10	.110,-1	.210,-1	-.145,-1	-.630,-2	.179,-1	
11	.242,-1	-.599,-1	-.540,-1	.107,-1	.422,-1	
12	.177,-1	-.206,-1	-.917,-1	.577,-1	-.411,-2	
13	.140,-1	.147,-1	-.[illegible],-1	.486,-2	.[illegible],-1	
14	.402,-2	-.225,-2	-.[illegible],-1	-.146,-1	-.[illegible],-1	
15	-.[illegible]24,-1	.281,-1	-.[illegible]70,-1	.287,-1	.[illegible],-1	
16	-.471,-2	-.[illegible]47,-1	-.[illegible]11,-1	.450,-1	.[illegible],-1	
17	-.[illegible]21,-2	.[illegible]06,-2	.[illegible]20,-2	.167,-	-.[illegible]45,-2	
18	.[illegible]14,-1	.[illegible]11,-1	-.[illegible]71,-2	.218,-1	.[illegible]05,-1	
19	.[illegible]7,-1	.147,-2	-.[illegible]07,-2	-.[illegible]05,-1	.402,-1	
20	.[illegible]77,-2	-.[illegible]22,-1	.472,-1	-.147,-1	.[illegible]19,-1	
21	.[illegible]21,-1	-.[illegible]25,-1	.[illegible]03,-1	-.[illegible]12,-1	-.[illegible]45,-2	
22	.[illegible]16,-1	.[illegible]70,-1	-.[illegible]14,-1	.[illegible]77,-1	.[illegible]44,-1	
23	-.[illegible]249,-1	.[illegible]20,-1	.[illegible]14,-1	.[illegible]45,-1	.[illegible]48,-1	
24	.[illegible]17,-1	.[illegible]01,-1	.[illegible]03,-1	-.[illegible]10,-1	.[illegible]17,-1	
25	.[illegible]34,-1	.[illegible]81,-1	.[illegible]16,-2	.[illegible]77,-1	.[illegible]25,-1	
26	-.[illegible]42,-2	-.[illegible]29,-1	.[illegible]42,-2	.[illegible]55,-1	-.[illegible]19,-1	
27	-.[illegible]66,-1	-.[illegible]52,-1	-.[illegible]28,-1	.194,-1	.[illegible]50,-1	
28	.[illegible]04,-1	.[illegible]28,-2	.[illegible]28,-2	.[illegible]25,-1	-.147,-2	
29	.441,-1	-.761,-2	-.211,-1	-.[illegible]40,-2	-.172,-1	
30	.185,-1	.194,-1	-.[illegible]50,-1	.102	-.122,-1	
31	-.[illegible]91,-1	-.[illegible]30,-1	.[illegible]21,-1	.[illegible]79,-1	-.[illegible]89,-1	
32	-.428,-1	-.272,-1	-.441,-1	-.[illegible]99,-2	-.[illegible]00,-1	
33	-.147,-2	-.[illegible]05,-1	-.[illegible]05,-1	.[illegible]57,-2	.254,-1	
34	.639,-1	-.[illegible]78,-1	-.[illegible]81,-1	.[illegible]98,-1	.[illegible]27,-1	
35	-.[illegible]20,-2	.717,-2	-.[illegible]62,-1	.[illegible]40,-1	-.[illegible]79,-1	
36	-.[illegible]94,-1	-.[illegible]50,-1	-.[illegible]21,-1	-.[illegible]07,-2	.[illegible]16,-1	
37	-.[illegible]07,-2	-.[illegible]06,-1	-.[illegible]26,-1	-.[illegible]95,-2	.[illegible]8[illegible],-1	
38	.[illegible]04,-1	-.[illegible]16,-1	-.[illegible]04,-1	-.[illegible]87,-2	-.[illegible]81,-1	
39	-.[illegible]75,-1	-.[illegible]98,-1	.[illegible]55,-1	-.[illegible]27,-1	.[illegible]65,-2	
40	-.[illegible]46,-1	.[illegible]80,-2	-.[illegible]20[illegible],-1	.[illegible]22[illegible],-1	-.[illegible]18,-1	
41	.[illegible]26,-1	-.[illegible]04,-2	.[illegible]57,-1	.[illegible]72,-1	-.[illegible]11,-1	
42	.[illegible]45,-1	.[illegible]63,-1	.[illegible]01,-2	.[illegible]73,-1	-.[illegible]36,-1	
43	.[illegible]16,-1	-.[illegible]01,-1	-.[illegible]72,-2	-.[illegible]10,-1	-.[illegible]98,-2	
44	.211,-1	-.[illegible]62,-2	-.[illegible]60,-1	.[illegible]06,-1	-.[illegible]70,-1	
45	.741,-2	-.[illegible]18,-2	-.[illegible]40,-1	-.[illegible]72,-1	[illegible],-1	
46	.114,-1	-.[illegible]45,-1	.[illegible]10,-2	.[illegible]11,-2	-.[illegible]09,-2	
47	.[illegible]31,-1	-.[illegible]86,-1	-.[illegible]61,-1	.[illegible]47,-1	-.[illegible]08,-2	
48	.527,-2	-.[illegible]45,-1	.[illegible]35,-1	-.[illegible]52[illegible],-2	.[illegible]09,-2	
49	.[illegible]10,-1	.[illegible]84,-2	.[illegible]97,-1	.[illegible]75,-1	.[illegible]16,-2	
50	.[illegible]15,-1	-.[illegible]14,-1	-.[illegible]28,-1	-.[illegible]20[illegible],-1	-.[illegible]77,-1	
51	.[illegible]10,-1	-.[illegible]91,-1	.[illegible]24[illegible],-1	-.[illegible]19[illegible],-1	-.[illegible]12,-1	
52	.[illegible]81,-1	-.[illegible]92,-1	.[illegible]37,-1	.[illegible]22[illegible],-2	-.[illegible]45,-1	
53	.[illegible]46,-1	-.[illegible]89,-1	.[illegible]49,-2	-.[illegible]61,-1	.[illegible]89,-2	
54	.332,-1	-.347,-1	.[illegible]82,-1	-.[illegible]51[illegible],-1	-.449,-1	
55	.177,-1	-.[illegible]47,-1	-.[illegible]89,-1	-.[illegible]40[illegible],-1	.[illegible]20,-1	
56	-.[illegible]02,-1	-.[illegible]55,-1	.[illegible]70[illegible],-2	.[illegible]13[illegible],-1	-.[illegible]16,-1	
57	.[illegible]24,-1	.[illegible]93,-1	-.[illegible]01,-2	.[illegible]45[illegible],-1	-.[illegible]12,-1	
58	-.[illegible]04,-1	.[illegible]38[illegible],-2	.[illegible]50,-1	.[illegible]37,-1	.[illegible]47,-1	
59	.[illegible]10,-1	.[illegible]11,-1	.[illegible]05,-1	-.[illegible]62,-1	.[illegible]27[illegible],-1	
60	.[illegible]67,-1	.[illegible]77,-1	-.[illegible]56,-2	.[illegible]69,-1	-.[illegible]40,-2	

Run No. 07; u component

K	Anemometer Position Number 1	2	3	4	5
00	1.000	1.000	1.000	1.000	1.000
01	.914	.912	.900	.900	.903
02	.866	.844	.847	.855	.854
03	.851	.800	.807	.773	.777
04	.802	.762	.762	.752	.746
05	.775	.727	.746	.674	.699
06	.752	.697	.716	.631	.660
07	.736	.684	.693	.605	.627
08	.715	.655	.671	.599	.606
09	.695	.648	.661	.570	.574
10	.676	.632	.644	.561	.552
11	.658	.618	.631	.552	.535
12	.644	.609	.608	.545	.515
13	.622	.598	.591	.545	.495
14	.603	.585	.577	.529	.469
15	.574	.569	.557	.516	.446
16	.557	.560	.533	.502	.426
17	.544	.545	.511	.484	.403
18	.528	.523	.493	.460	.379
19	.519	.503	.469	.433	.367
20	.494	.480	.452	.422	.349
21	.471	.451	.440	.403	.329
22	.456	.419	.437	.381	.307
23	.433	.399	.428	.366	.286
24	.406	.379	.414	.353	.266
25	.392	.358	.411	.348	.252
26	.376	.338	.407	.339	.246
27	.362	.330	.401	.331	.247
28	.340	.320	.394	.321	.239
29	.318	.302	.381	.308	.229
30	.305	.289	.368	.287	.214
31	.289	.268	.352	.268	.201
32	.274	.251	.339	.262	.187
33	.266	.232	.322	.262	.172
34	.248	.218	.300	.240	.153
35	.243	.204	.283	.218	.137
36	.235	.193	.264	.207	.120
37	.222	.186	.245	.197	.110
38	.208	.171	.226	.183	.108
39	.198	.158	.211	.173	.104
40	.193	.146	.197	.168	.995,-1
41	.182	.135	.186	.154	.942,-1
42	.175	.131	.172	.132	.986,-1
43	.161	.122	.153	.115	.104
44	.152	.105	.143	.104	.106
45	.142	.916,-1	.133	.920,-1	.107
46	.128	.838,-1	.119	.819,-1	.101
47	.112	.773,-1	.103	.698,-1	.884,-1
48	.851,-1	.610,-1	.925,-1	.616,-1	.881,-1
49	.731,-1	.418,-1	.889,-1	.553,-1	.841,-1
50	.577,-1	.304,-1	.846,-1	.542,-1	.736,-1
51	.466,-1	.947,-2	.782,-1	.493,-1	.655,-1
52	.364,-1	-.853,-2	.623,-1	.448,-1	.637,-1
53	.311,-1	-.117,-1	.494,-1	.513,-1	.465,-1
54	.178,-1	-.105,-1	.456,-1	.540,-1	.359,-1
55	.977,-2	-.114,-1	.441,-1	.480,-1	.316,-1
56	-.394,-2	-.406,-2	.387,-1	.438,-1	.308,-1
57	-.166,-1	-.854,-2	.309,-1	.449,-1	.312,-1
58	-.222,-1	-.196,-1	.255,-1	.386,-1	.214,-1
59	-.285,-1	-.364,-1	.256,-1	.374,-1	.120,-1
60	-.373,-1	-.479,-1	.214,-1	.327,-1	.886,-2

Run No. 071 v component

K	Anemometer Position Number 1	2	3	4	5
00	1.000	1.000	1.000	1.000	1.000
01	.909	.917	.928	.941	.914
02	.868	.880	.885	.899	.877
03	.833	.842	.846	.867	.827
04	.808	.813	.819	.841	.786
05	.783	.792	.798	.820	.757
06	.761	.778	.783	.800	.722
07	.752	.766	.768	.783	.705
08	.736	.751	.752	.766	.686
09	.724	.735	.738	.758	.666
10	.712	.728	.721	.718	.642
11	.704	.718	.705	.706	.619
12	.688	.708	.686	.692	.598
13	.678	.696	.680	.682	.588
14	.662	.686	.670	.669	.565
15	.654	.672	.662	.659	.559
16	.647	.665	.653	.648	.550
17	.634	.655	.651	.638	.544
18	.628	.650	.645	.623	.539
19	.624	.641	.635	.614	.534
20	.618	.634	.631	.609	.523
21	.612	.627	.622	.608	.517
22	.600	.618	.609	.605	.516
23	.585	.605	.601	.600	.514
24	.571	.586	.593	.600	.508
25	.559	.569	.582	.598	.503
26	.548	.565	.572	.593	.500
27	.540	.557	.562	.585	.497
28	.540	.556	.555	.579	.487
29	.550	.550	.548	.573	.475
30	.523	.539	.540	.564	.467
31	.514	.526	.531	.554	.453
32	.506	.513	.521	.542	.448
33	.490	.505	.513	.530	.431
34	.477	.502	.507	.511	.417
35	.467	.495	.496	.496	.398
36	.464	.489	.483	.478	.385
37	.463	.483	.475	.465	.370
38	.456	.474	.465	.454	.347
39	.449	.468	.454	.436	.336
40	.438	.455	.442	.422	.324
41	.435	.446	.431	.410	.312
42	.423	.436	.418	.393	.301
43	.415	.429	.415	.369	.284
44	.407	.415	.418	.354	.271
45	.397	.409	.411	.343	.258
46	.390	.403	.401	.339	.247
47	.382	.391	.393	.329	.243
48	.374	.384	.385	.321	.230
49	.370	.387	.383	.310	.220
50	.364	.380	.377	.302	.221
51	.356	.373	.365	.293	.215
52	.341	.364	.357	.293	.209
53	.325	.351	.349	.300	.195
54	.304	.333	.338	.299	.189
55	.293	.321	.328	.297	.188
56	.286	.312	.318	.291	.180
57	.281	.305	.311	.287	.173
58	.278	.292	.309	.279	.162
59	.274	.286	.297	.272	.147
60	.266	.271	.282	.265	.135



Run No. 07; w component

	Anemometer Position Number				
K	1	2	3	4	5
00	1.000	1.000	1.000	1.000	1.000
01	.180	.210	.216	.234	.253
02	.921,-1	.131	.115	.203	.127
03	.410,-1	.887,-1	.391,-2	.800,-1	.806,-1
04	.982,-1	.825,-1	.669,-1	.737,-1	.429,-1
05	.150,-1	.350,-1	.355,-1	.407,-1	-.911,-2
06	-.420,-1	.230,-1	.759,-1	.652,-2	.169,-2
07	-.799,-2	.619,-2	-.615,-4	-.196,-1	.613,-2
08	-.554,-2	.437,-1	.128,-1	-.433,-1	.230,-1
09	-.167,-1	.250,-1	-.114,-1	.173,-1	-.422,-1
10	.169,-1	-.917,-2	.335,-1	.391,-1	-.145,-1
11	.352,-1	.280,-1	-.337,-1	.274,-1	-.857,-2
12	-.343,-1	.302,-1	-.356,-1	.350,-1	.376,-1
13	-.394,-2	.305,-1	-.136,-1	.133,-1	.350,-1
14	.231,-1	-.369,-1	.254,-2	.592,-1	.264,-1
15	.153,-1	-.371,-1	-.113,-1	.259,-1	.134,-1
16	-.238,-1	.215,-1	-.620,-2	.597,-2	-.353,-1
17	-.607,-1	-.395,-2	-.913,-3	-.624,-1	-.430,-1
18	-.159,-1	.149,-1	.316,-2	-.512,-1	.179,-1
19	.181,-1	.321,-1	.790,-2	-.471,-1	.699,-1
20	.395,-1	-.579,-3	-.408,-2	-.350,-1	-.342,-1
21	.437,-1	-.233,-1	-.251,-1	-.499,-1	-.140,-2
22	.113,-1	.697,-1	.298,-1	-.843,-1	.812,-2
23	.100,-1	.542,-2	.176,-1	-.299,-1	-.364,-1
24	-.316,-1	.508,-1	-.418,-2	.118,-1	-.728,-1
25	-.291,-1	.509,-1	.499,-1	-.402,-2	-.373,-1
26	.325,-1	.140,-1	-.114,-1	-.248,-1	.206,-1
27	-.141,-1	.370,-1	.214,-2	-.181,-1	.112,-1
28	.129,-2	.158,-1	.398,-1	-.972,-2	-.281,-2
29	.306,-2	.266,-1	-.176,-1	-.338,-1	.141,-1
30	.382,-1	-.306,-1	.310,-1	-.357,-1	-.486,-2
31	-.223,-2	.277,-1	-.187,-2	-.270,-1	-.519,-1
32	-.643,-2	-.152,-1	.318,-1	.977,-2	.164,-1
33	.550,-1	.470,-1	.222,-1	-.407,-1	.323,-1
34	-.427,-2	.845,-2	.426,-1	-.478,-1	.232,-1
35	.730,-1	.735,-1	.598,-1	-.174,-1	-.282,-1
36	-.154,-1	.553,-1	.758,-1	-.391,-1	-.287,-1
37	.357,-2	.423,-1	.450,-1	.118,-2	-.657,-2
38	-.108,-1	.664,-1	.346,-1	-.720,-2	.113,-1
39	-.154,-1	.457,-1	-.116,-1	.140,-1	-.555,-1
40	-.204,-1	.182,-1	-.176,-1	-.218,-1	.899,-2
41	-.425,-1	.610,-1	.270,-1	-.350,-1	-.557,-2
42	-.249,-1	.508,-1	.112,-1	-.200,-1	.882,-2
43	.537,-2	-.756,-2	.977,-2	-.176,-1	.167,-1
44	-.240,-1	.506,-1	.766,-2	.975,-2	.405,-1
45	-.515,-1	.501,-1	-.102,-1	-.570,-2	.217,-1
46	.299,-1	.218,-2	-.524,-1	-.339,-1	.238,-1
47	-.208,-1	.756,-2	-.352,-1	-.341,-2	-.148,-2
48	-.158,-1	.970,-2	-.879,-2	-.295,-3	.167,-1
49	-.248,-2	.258,-1	-.237,-1	.626,-2	-.234,-1
50	-.888,-1	-.142,-1	-.240,-1	.196,-1	-.377,-2
51	-.951,-1	.943,-2	-.522,-1	.106,-2	-.272,-1
52	-.707,-1	-.424,-1	.104,-1	.315,-1	.227,-1
53	-.184,-1	-.151,-1	-.873,-2	.192,-1	.879,-2
54	.378,-2	-.466,-1	.305,-1	.459,-1	.172,-1
55	-.172,-1	-.773,-1	-.317,-2	.178,-1	.363,-1
56	.414,-1	-.318,-1	-.264,-1	.123,-1	.440,-1
57	.105,-1	-.310,-1	-.402,-1	-.305,-1	.165,-1
58	-.974,-2	-.207,-1	.308,-1	-.212,-1	.342,-1
59	-.165,-1	-.517,-1	.399,-1	.363,-1	.193,-1
60	-.334,-1	-.124,-1	.378,-1	.296,-1	.601,-2

Run No. 08; u component

K	Anemometer Position Number 1	2	3	4	5
00	1.000	1.000	1.000	1.000	1.000
01	.883	.880	.880	.884	.843
02	.802	.806	.803	.799	.762
03	.743	.765	.758	.743	.711
04	.698	.722	.714	.707	.640
05	.661	.683	.674	.678	.61[illegible]
06	.632	.646	.656	.647	.580
07	.608	.610	.636	.622	.548
08	.596	.583	.607	.609	.53[illegible]
09	.569	.566	.579	.595	.49[illegible]
10	.549	.564	.558	.581	.46[illegible]
11	.536	.540	.543	.567	.443
12	.523	.513	.511	.554	.42[illegible]
13	.507	.498	.485	.532	.391
14	.494	.489	.470	.507	.387
15	.481	.477	.462	.4[illegible]	.365
16	.471	.461	.454	.476	.350
17	.464	.443	.439	.463	.343
18	.471	.424	.426	.443	.31[illegible]
19	.476	.408	.405	.418	.306
20	.487	.395	.389	.3[illegible]	.3[illegible]
21	.476	.387	.377	.378	.274
22	.462	.373	.366	.359	.267
23	.458	.363	.346	.355	.249
24	.455	.358	.326	.359	.233
25	.450	.344	.318	.350	.220
26	.435	.342	.311	.340	.198
27	.425	.342	.288	.335	.188
28	.417	.335	.281	.328	.184
29	.409	.334	.270	.317	.178
30	.397	.332	.257	.305	.193
31	.394	.332	.246	.292	.196
32	.387	.332	.233	.288	.201
33	.386	.323	.217	.283	.214
34	.374	.303	.214	.272	.197
35	.365	.290	.209	.270	.173
36	.357	.296	.215	.269	.165
37	.349	.286	.226	.276	.147
38	.336	.276	.245	.273	.126
39	.334	.284	.251	.266	.136
40	.324	.283	.250	.267	.124
41	.317	.283	.230	.273	.980,-1
42	.315	.292	.216	.279	.790,-1
43	.313	.298	.220	.279	.696,-1
44	.318	.298	.221	.269	.574,-1
45	.315	.303	.216	.267	.450,-1
46	.298	.310	.223	.262	.403,-1
47	.283	.304	.228	.265	.508,-1
48	.268	.291	.221	.270	.589,-1
49	.271	.287	.220	.273	.625,-1
50	.265	.285	.220	.259	.702,-1
51	.264	.281	.211	.256	.802,-1
52	.260	.276	.204	.265	.908,-1
53	.247	.274	.199	.266	.982,-1
54	.242	.258	.202	.267	.112
55	.233	.253	.201	.262	.122
56	.225	.244	.210	.256	.123
57	.223	.236	.217	.257	.121
58	.227	.225	.220	.251	.113
59	.228	.216	.216	.239	.109
60	.219	.222	.226	.228	.105

Run No. 08; v component

K	Anemometer Position Number 1	2	3	4	5
00	1.000	1.000	1.000	1.000	1.000
01	.901	.901	.914	.931	.909
02	.872	.866	.860	.904	.883
03	.844	.840	.861	.884	.862
04	.825	.824	.838	.867	.843
05	.821	.806	.828	.854	.817
06	.807	.787	.815	.838	.798
07	.798	.774	.799	.825	.776
08	.773	.758	.786	.814	.761
09	.767	.748	.776	.810	.744
10	.752	.735	.769	.807	.741
11	.732	.720	.757	.804	.725
12	.725	.708	.745	.790	.725
13	.717	.699	.731	.781	.723
14	.722	.688	.718	.767	.707
15	.707	.671	.713	.759	.696
16	.705	.657	.706	.750	.689
17	.691	.652	.709	.742	.673
18	.681	.646	.705	.736	.660
19	.680	.644	.690	.719	.645
20	.676	.641	.683	.712	.631
21	.672	.625	.672	.700	.615
22	.664	.622	.670	.694	.605
23	.665	.621	.652	.683	.591
24	.659	.616	.635	.681	.583
25	.641	.608	.626	.672	.568
26	.631	.596	.614	.668	.560
27	.628	.597	.601	.657	.550
28	.625	.584	.590	.652	.549
29	.621	.576	.576	.646	.536
30	.607	.569	.568	.632	.531
31	.589	.563	.560	.631	.517
32	.579	.557	.548	.624	.503
33	.575	.547	.545	.619	.494
34	.574	.546	.528	.612	.476
35	.571	.538	.518	.607	.469
36	.554	.537	.507	.603	.457
37	.554	.522	.503	.594	.445
38	.551	.512	.493	.588	.434
39	.548	.505	.488	.584	.422
40	.545	.500	.479	.580	.410
41	.538	.495	.469	.581	.400
42	.525	.488	.471	.577	.386
43	.515	.485	.466	.569	.375
44	.518	.480	.460	.354	.363
45	.720	.473	.459	.343	.356
46	.515	.466	.446	.339	.346
47	.517	.467	.443	.329	.333
48	.516	.458	.437	.321	.330
49	.507	.452	.436	.310	.319
50	.504	.452	.440	.302	.313
51	.498	.448	.430	.293	.305
52	.495	.444	.421	.293	.307
53	.486	.442	.416	.300	.301
54	.483	.441	.407	.299	.297
55	.477	.441	.398	.297	.285
56	.470	.438	.397	.291	.283
57	.467	.437	.390	.287	.275
58	.462	.428	.398	.279	.273
59	.459	.428	.399	.272	.270
60	.451	.430	.400	.265	.269

Run No. 06; w component

	Anemometer Position Number				
K	1	2	3	4	5
00	1.000	1.000	1.000	1.000	1.000
01	.134	.134	.173	.246	.175
02	.274,-1	.623,-1	.781,-1	.110	.845,-1
03	.665,-1	.907,-1	.465,-1	.126	.991,-1
04	.445,-1	.685,-1	.771,-1	.109	.135,-1
05	-.753,-2	.255,-1	.514,-1	.616,-1	.631,-1
06	.201,-1	.651,-1	.526,-1	-.510,-2	.325,-1
07	.331,-1	.385,-1	.909,-1	.406,-1	.404,-1
08	.514,-1	.113,-1	.343,-1	.418,-1	.795,-1
09	.134,-1	.128,-1	.577,-1	.123,-1	.734,-1
10	.201,-1	-.281,-1	.674,-1	-.357,-2	.122,-1
11	-.617,-1	-.614,-1	.705,-1	.732,-2	-.191,-1
12	.556,-2	-.630,-3	.224,-1	-.659,-2	.265,-1
13	.340,-1	.991,-2	-.193,-1	.443,-1	-.258,-1
14	.900,-1	-.443,-1	-.232,-1	.430,-1	-.250,-1
15	.203,-1	-.142,-1	.111,-1	.319,-1	-.235,-2
16	.154,-1	-.939,-1	.413,-1	.228,-1	.929,-2
17	.160,-1	-.382,-2	-.625,-1	.695,-1	.554,-1
18	.246,-1	.196,-2	-.139,-1	.666,-1	-.123,-2
19	-.788,-1	-.803,-2	-.624,-2	.212,-1	-.194,-1
20	-.211,-1	-.569,-1	-.215,-1	.335,-1	-.497,-2
21	.532,-1	-.772,-1	-.274,-2	.459,-1	-.424,-1
22	-.476,-2	-.425,-1	-.728,-2	-.217,-1	-.533,-1
23	.776,-2	-.419,-1	-.186,-1	-.462,-2	-.186,-1
24	-.250,-1	-.204,-1	-.520,-1	.754,-2	-.391,-1
25	-.327,-1	-.467,-1	-.106,-2	-.147,-1	.941,-2
26	.223,-1	-.824,-1	.163,-1	-.396,-1	.170,-1
27	-.197,-1	.978,-2	.252,-2	-.691,-1	-.121,-1
28	.702,-2	-.247,-1	-.136,-1	-.162,-1	-.244,-1
29	-.393,-1	.682,-2	-.284,-1	-.538,-1	-.354,-1
30	.149,-1	.378,-1	.375,-1	-.387,-1	.262,-1
31	.514,-1	.631,-1	.548,-1	-.197,-1	-.396,-1
32	-.476,-2	.426,-1	.782,-2	-.557,-1	-.287,-1
33	-.208,-1	.369,-1	-.322,-1	.397,-1	.232,-1
34	-.256,-1	.346,-1	-.444,-1	-.115,-2	.204,-1
35	.524,-1	-.541,-2	-.253,-1	.180,-1	.439,-1
36	-.168,-1	-.851,-2	.173,-1	-.780,-1	-.302,-1
37	-.483,-1	.332,-1	.950,-2	.109,-1	-.252,-1
38	-.246,-1	-.346,-1	.837,-3	.898,-1	-.246,-1
39	.236,-1	.344,-1	-.442,-1	-.702,-1	.268,-2
40	-.342,-1	.411,-1	.182,-2	-.676,-1	.151,-1
41	-.282,-1	-.566,-1	.137,-1	.235,-1	-.972,-2
42	.707,-2	-.125,-1	-.322,-2	.437,-1	-.282,-1
43	.567,-3	.187,-1	-.990,-2	-.145,-1	.327,-2
44	-.293,-1	.734,-1	-.574,-1	-.253,-1	-.444,-1
45	.115,-1	.936,-2	-.509,-1	.262,-1	-.235,-1
46	-.835,-2	.505,-1	-.333,-1	.119,-1	-.985,-2
47	.408,-2	.183,-1	-.252,-1	-.204,-1	.107,-1
48	.131,-1	.577,-1	-.697,-1	-.443,-1	.282,-1
49	-.273,-1	.905,-1	-.495,-1	-.116,-1	-.153,-2
50	-.502,-1	.441,-1	-.341,-1	-.482,-1	-.992,-2
51	-.526,-1	.355,-1	-.245,-1	-.147,-1	.967,-2
52	.624,-2	.550,-1	-.270,-1	-.345,-2	-.252,-1
53	.194,-1	.280,-1	-.314,-1	.247,-1	-.347,-1
54	.929,-2	-.410,-1	-.453,-1	.405,-1	-.141,-1
55	-.145,-1	-.195,-1	-.925,-1	-.194,-1	.845,-2
56	-.510,-2	-.182,-1	-.400,-1	-.129,-1	-.351,-4
57	.309,-2	-.144,-1	-.090,-1	-.376,-1	-.213,-1
58	.203,-1	-.323,-1	.180,-1	-.179,-1	-.904,-1
59	.207,-1	-.853,-2	-.997,-1	.130,-1	-.110,-1
60	-.511,-1	-.54_,-1	.990,-2	-.151,-1	.921,-1

Run No. 09; u component

K	Anemometer Position Number 1	2	3	4	5
00			1.000		
01			.736		
02			.547		
03			.407		
04			.414		
05			.305		
06			.323		
07			.282		
08			.258		
09			.259		
10			.245		
11			.216		
12			.194		
13			.177		
14			.135		
15			.115		
16			.883,-1		
17			.829,-1		
18			.813,-1		
19			.855,-1		
20			.722,-1		
21			.407,-1		
22			.338,-1		
23			.355,-1		
24			.220,-1		
25			-.282,-1		
26			-.370,-1		
27			-.303,-1		
28			-.793,-2		
29			-.121,-1		
30			-.280,-1		
31			-.415,-1		
32			-.341,-1		
33			-.505,-1		
34			-.677,-1		
35			-.808,-1		
36			-.726,-1		
37			-.559,-1		
38			-.425,-1		
39			-.532,-1		
40			-.694,-1		
41			-.536,-1		
42			-.595,-1		
43			-.554,-1		
44			-.550,-1		
45			-.271,-1		
46			.511,-3		
47			-.706,-2		
48			-.144,-1		
49			-.105,-1		
50			-.411,-2		
51			.820,-2		
52			.955,-2		
53			-.509,-2		
54			-.855,-2		
55			-.945,-2		
56			-.206,-1		
57			-.381,-1		
58			-.375,-1		
59			-.321,-1		
60			-.378,-1		

Run No. 09; v component

K	Anemometer Position Number 1	2	3	4	5
00			1.000		
01			.625		
02			.781		
03			.745		
04			.721		
05			.710		
06			.695		
07			.575		
08			.654		
09			.648		
10			.637		
11			.637		
12			.612		
13			.593		
14			.582		
15			.579		
16			.555		
17			.550		
18			.532		
19			.525		
20			.493		
21			.473		
22			.455		
23			.442		
24			.439		
25			.424		
26			.426		
27			.415		
28			.399		
29			.394		
30			.386		
31			.388		
32			.392		
33			.387		
34			.383		
35			.385		
36			.382		
37			.381		
38			.365		
39			.364		
40			.357		
41			.353		
42			.350		
43			.346		
44			.347		
45			.350		
46			.357		
47			.358		
48			.366		
49			.353		
50			.365		
51			.346		
52			.334		
53			.335		
54			.329		
55			.348		
56			.334		
57			.328		
58			.330		
59			.326		
60			.334		

Run No. 05; w component

K	Anemometer Position Number 1	2	3	4	5
00			1.000		
01			.125		
02			.326,-1		
03			.334,-2		
04			.453,-1		
05			.366,-1		
06			.130,-1		
07			.251,-1		
08			.624,-1		
09			.228,-1		
10			.553,-1		
11			.406,-1		
12			-.619,-1		
13			-.802,-3		
14			.119,-1		
15			-.990,-3		
16			-.304,-1		
17			-.451,-2		
18			.442,-2		
19			.609,-1		
20			.195,-1		
21			-.146,-1		
22			-.394,-1		
23			.558,-2		
24			-.919,-2		
25			.291,-2		
26			-.914,-2		
27			-.635,-2		
28			-.347,-1		
29			-.863,-2		
30			.214,-1		
31			-.369,-1		
32			-.453,-1		
33			-.391,-1		
34			-.206,-1		
35			-.665,-1		
36			-.594,-1		
37			-.474,-1		
38			-.117,-1		
39			.695,-2		
40			.204,-1		
41			-.159,-1		
42			-.346,-1		
43			-.680,-1		
44			-.929,-2		
45			-.240,-1		
46			.135,-1		
47			.483,-1		
48			.766,-1		
49			-.262,-2		
50			.475,-2		
51			-.168,-1		
52			-.179,-1		
53			.136,-1		
54			-.495,-2		
55			.141,-1		
56			-.237,-1		
57			.259,-2		
58			.792,-2		
59			.279,-1		
60			.457,-1		

Run No. 10; u component

K	Anemometer Position Number 1	2	3	4	5
00	1.000	1.000	1.000	1.000	1.000
01	.920	.920	.908	.936	.913
02	.860	.869	.854	.838	.841
03	.824	.827	.808	.842	.792
04	.795	.799	.785	.802	.758
05	.765	.772	.761	.770	.727
06	.746	.744	.733	.743	.701
07	.725	.723	.709	.719	.678
08	.704	.702	.690	.706	.652
09	.681	.682	.675	.695	.633
10	.667	.661	.655	.690	.610
11	.654	.647	.638	.670	.595
12	.639	.637	.615	.650	.587
13	.625	.619	.608	.636	.572
14	.608	.599	.602	.623	.557
15	.595	.581	.592	.607	.534
16	.581	.564	.580	.551	.504
17	.572	.545	.557	.572	.485
18	.560	.526	.547	.551	.451
19	.549	.505	.538	.529	.432
20	.535	.491	.528	.513	.413
21	.518	.478	.506	.492	.402
22	.501	.460	.491	.473	.402
23	.493	.450	.468	.455	.390
24	.484	.439	.455	.436	.383
25	.465	.426	.441	.428	.372
26	.442	.400	.433	.414	.355
27	.426	.391	.419	.398	.329
28	.407	.377	.402	.382	.313
29	.388	.353	.376	.366	.301
30	.377	.328	.355	.356	.292
31	.363	.305	.332	.342	.271
32	.338	.283	.313	.321	.249
33	.312	.266	.293	.302	.233
34	.291	.240	.274	.286	.214
35	.285	.222	.257	.275	.192
36	.275	.210	.242	.267	.173
37	.264	.201	.228	.252	.153
38	.249	.185	.210	.235	.136
39	.243	.175	.196	.218	.126
40	.235	.161	.185	.197	.115
41	.224	.154	.175	.175	.107
42	.226	.145	.165	.152	.970,-1
43	.222	.142	.155	.133	.826,-1
44	.226	.139	.143	.124	.769,-1
45	.222	.134	.135	.119	.663,-1
46	.214	.123	.124	.118	.572,-1
47	.208	.112	.114	.115	.538,-1
48	.205	.108	.102	.110	.386,-1
49	.193	.105	.938,-1	.997,-1	.283,-1
50	.181	.882,-1	.854,-1	.890,-1	.222,-1
51	.177	.796,-1	.689,-1	.746,-1	.191,-1
52	.174	.779,-1	.551,-1	.660,-1	.120,-1
53	.165	.765,-1	.436,-1	.567,-1	.727,-2
54	.160	.716,-1	.376,-1	.524,-1	.289,-2
55	.146	.678,-1	.346,-1	.481,-1	.621,-2
56	.135	.685,-1	.313,-1	.487,-1	.118,-1
57	.131	.699,-1	.238,-1	.500,-1	.136,-1
58	.119	.723,-1	.118,-1	.476,-1	.197,-2
59	.122	.744,-1	.102,-1	.409,-1	-.883,-2
60	.123	.750,-1	.206,-2	.259,-1	-.177,-1

Run No. 10; v component

K	Anemometer Position Number 1	2	3	4	5
00	1.000	1.000	1.000	1.000	1.000
01	.881	.886	.895	.926	.923
02	.835	.834	.829	.876	.883
03	.810	.782	.771	.834	.863
04	.777	.741	.721	.795	.843
05	.752	.705	.685	.755	.819
06	.732	.679	.656	.721	.798
07	.706	.663	.629	.681	.774
08	.677	.642	.604	.646	.750
09	.648	.632	.583	.616	.726
10	.635	.627	.566	.590	.706
11	.615	.601	.540	.563	.690
12	.597	.580	.513	.533	.669
13	.571	.560	.484	.515	.649
14	.552	.539	.466	.498	.629
15	.532	.518	.448	.476	.613
16	.516	.512	.438	.459	.597
17	.513	.515	.430	.445	.581
18	.497	.506	.417	.432	.569
19	.477	.488	.405	.425	.556
20	.471	.474	.385	.420	.544
21	.468	.462	.374	.411	.524
22	.468	.462	.365	.401	.509
23	.458	.454	.363	.390	.496
24	.445	.450	.360	.383	.496
25	.432	.430	.354	.382	.484
26	.425	.430	.343	.376	.468
27	.413	.417	.331	.376	.464
28	.419	.416	.329	.370	.460
29	.419	.404	.329	.359	.448
30	.410	.397	.328	.347	.435
31	.390	.388	.326	.337	.431
32	.377	.376	.325	.332	.423
33	.352	.365	.326	.328	.415
34	.345	.363	.327	.322	.397
35	.335	.355	.327	.315	.385
36	.326	.352	.322	.306	.379
37	.323	.337	.318	.295	.369
38	.303	.323	.305	.283	.353
39	.281	.311	.296	.268	.340
40	.283	.306	.286	.251	.324
41	.265	.306	.278	.236	.302
42	.259	.290	.261	.219	.287
43	.250	.287	.244	.201	.282
44	.237	.280	.243	.186	.275
45	.230	.267	.236	.169	.255
46	.220	.263	.228	.149	.244
47	.208	.256	.215	.132	.229
48	.205	.248	.209	.120	.218
49	.191	.230	.189	.108	.211
50	.183	.222	.174	.983,-1	.199
51	.189	.209	.167	.913,-1	.190
52	.189	.211	.160	.834,-1	.181
53	.182	.203	.151	.690,-1	.173
54	.181	.197	.139	.603,-1	.156
55	.177	.190	.132	.498,-1	.143
56	.179	.182	.124	.352,-1	.137
57	.174	.181	.115	.225,-1	.126
58	.169	.181	.112	.174,-1	.115
59	.166	.175	.996,-1	.101,-1	.105
60	.166	.166	.913,-1	.300,-2	.968

Run No. 10; w component

K	Anemometer Position Number 1	2	3	4	5
00	1.000	1.000	1.000	1.000	1.000
01	.206	.218	.153	.256	.215
02	.117	.195	.626,-1	.134	.809,-1
03	.793,-1	.115	.509,-1	.185,-1	.368,-3
04	.257,-1	.124	.502,-2	.366,-1	.351,-2
05	.544,-1	-.910,-3	-.662,-2	.750,-1	-.164,-1
06	.456,-1	.476,-1	-.492,-3	.692,-1	-.243,-2
07	.353,-1	.468,-1	.299,-1	.310,-1	-.502,-1
08	-.809,-2	.100	.475,-2	-.327,-1	.101,-1
09	-.100,-1	.312,-1	.572,-2	-.205,-1	-.351,-1
10	-.625,-1	.660,-1	-.131,-1	-.207,-1	-.526,-1
11	-.171,-1	-.219,-1	-.601,-2	-.566,-1	-.256,-2
12	.453,-1	.297,-1	.103,-1	-.511,-1	-.149,-1
13	-.321,-1	-.121,-1	.649,-2	.527,-2	.128,-1
14	-.202,-1	.241,-1	-.307,-2	.327,-1	-.765,-2
15	.647,-2	.594,-2	-.342,-1	.179,-1	-.191,-1
16	-.286,-1	.256,-1	-.377,-1	.563,-2	-.230,-1
17	.181,-1	-.167,-1	.634,-2	.186,-1	-.395,-1
18	.148,-1	.167,-1	-.471,-1	.103,-1	.698,-2
19	-.270,-1	.171,-1	.140,-1	.721,-2	-.138,-2
20	.137,-1	-.121,-1	.378,-2	.595,-2	-.316,-1
21	-.359,-1	.243,-1	-.355,-1	-.173,-1	-.784,-1
22	.215,-1	.981,-2	-.221,-1	.256,-2	-.363,-1
23	.257,-1	.268,-1	.253,-1	.555,-1	-.136,-1
24	.731,-1	.393,-2	.520,-1	.420,-1	-.460,-2
25	.392,-1	.468,-1	.154,-1	.246,-1	.205,-1
26	-.163,-1	-.129,-1	-.621,-2	.281,-1	-.584,-2
27	-.508,-1	-.656,-2	-.271,-1	.898,-2	-.176,-1
28	.706,-2	-.229,-1	.374,-1	-.352,-1	-.478,-2
29	-.296,-1	-.627,-2	-.615,-1	.313,-1	.172,-1
30	.521,-1	-.273,-1	-.590,-1	.174,-1	-.104,-1
31	.166,-1	-.412,-1	-.514,-1	.668,-1	.716,-2
32	.858,-2	-.470,-1	-.373,-1	.280,-1	-.269,-1
33	.170,-1	-.135,-1	-.263,-1	.116,-1	.544,-1
34	-.225,-1	-.145,-1	.267,-1	-.309,-1	.348,-1
35	.395,-2	.343,-1	.261,-1	-.205,-2	.333,-1
36	-.192,-1	-.109,-2	-.346,-1	-.789,-3	-.514,-1
37	.109,-1	.104,-1	.203,-2	.104,-1	-.178,-1
38	-.356,-1	.463,-1	-.139,-1	-.213,-1	-.306,-1
39	.476,-2	.172,-2	-.105,-1	-.423,-1	.117,-1
40	-.320,-1	.472,-2	.246,-1	-.527,-1	.300,-2
41	-.323,-1	-.613,-2	.400,-1	-.242,-1	.169,-1
42	.125,-1	-.179,-1	.255,-1	-.466,-1	-.546,-2
43	-.224,-1	.142,-1	.764,-1	-.474,-1	.648,-3
44	-.134,-1	.920,-2	.233,-1	-.961,-2	-.338,-1
45	-.712,-2	.524,-1	.396,-1	-.235,-1	-.122,-1
46	.205,-2	-.458,-1	.235,-1	-.296,-1	.227,-1
47	-.660,-1	.280,-1	-.101,-2	-.266,-1	.516,-1
48	-.469,-1	.245,-1	.342,-1	-.660,-1	.244,-1
49	.216,-1	.124,-2	.557,-1	.742,-2	.275,-1
50	-.330,-1	-.212,-1	.830,-3	.123,-1	.224,-1
51	.317,-1	-.329,-1	-.214,-1	-.355,-1	.154,-2
52	.443,-1	-.398,-1	-.427,-1	.220,-2	-.271,-1
53	.310,-1	-.458,-1	.187,-1	.193,-1	-.305,-1
54	.170,-1	-.406,-1	-.242,-1	.345,-1	-.204,-1
55	.437,-1	-.486,-1	-.975,-2	.196,-1	-.152,-1
56	-.173,-1	.208,-1	.375,-1	.441,-1	.327,-2
57	.198,-2	.384,-1	.244,-1	.185,-2	.151,-1
58	.812,-2	.825,-1	.756,-3	.191,-2	.537,-1
59	-.333,-1	-.120,-1	-.176,-1	.350,-1	.477,-1
60	-.286,-1	-.126,-2	.298,-1	.598,-1	.262,-1

Run No. 13; u component

	Anemometer Position Number				
K	1	2	3	4	5
00	1.000	1.000	1.000	1.000	1.000
01	.976	.957	.970	.980	.925
02	.956	.941	.944	.966	.897
03	.949	.924	.929	.958	.883
04	.946	.911	.918	.951	.870
05	.942	.901	.910	.944	.865
06	.936	.894	.910	.941	.862
07	.932	.891	.903	.936	.860
08	.932	.881	.899	.934	.858
09	.929	.881	.892	.932	.858
10	.922	.881	.888	.924	.858
11	.915	.878	.881	.919	.858
12	.908	.875	.877	.917	.852
13	.902	.868	.877	.912	.850
14	.902	.868	.877	.905	.854
15	.902	.861	.875	.900	.858
16	.898	.855	.866	.895	.856
17	.895	.848	.862	.892	.848
18	.892	.848	.854	.890	.842
19	.892	.851	.854	.888	.840
20	.895	.851	.854	.888	.840
21	.892	.858	.851	.883	.838
22	.885	.851	.847	.885	.836
23	.878	.848	.847	.880	.832
24	.875	.848	.851	.878	.816
25	.871	.848	.847	.878	.816
26	.868	.845	.843	.875	.816
27	.864	.842	.836	.873	.814
28	.858	.838	.836	.868	.810
29	.854	.832	.836	.863	.800
30	.854	.828	.825	.861	.800
31	.854	.825	.821	.858	.794
32	.851	.822	.813	.856	.789
33	.844	.822	.810	.856	.787
34	.841	.818	.806	.856	.783
35	.841	.815	.802	.853	.781
36	.837	.812	.799	.848	.787
37	.834	.809	.799	.841	.787
38	.834	.809	.802	.834	.785
39	.827	.809	.806	.829	.783
40	.827	.805	.806	.822	.779
41	.827	.805	.802	.819	.779
42	.824	.802	.802	.814	.783
43	.820	.799	.806	.814	.781
44	.817	.795	.806	.814	.777
45	.814	.792	.806	.809	.771
46	.814	.789	.802	.804	.769
47	.810	.785	.802	.802	.765
48	.807	.789	.802	.802	.763
49	.803	.785	.806	.800	.753
50	.807	.785	.806	.797	.747
51	.807	.785	.802	.795	.745
52	.807	.782	.802	.795	.739
53	.803	.779	.802	.790	.743
54	.797	.776	.802	.787	.745
55	.793	.772	.799	.780	.741
56	.790	.766	.791	.780	.737
57	.790	.766	.784	.780	.729
58	.790	.766	.780	.778	.723
59	.786	.762	.776	.773	.729
60	.783	.759	.772	.770	.731

Run No. 13; v component

	Anemometer Position Number				
K	1	2	3	4	5
00	1.000	1.000	1.000	1.000	1.000
01	.933	.944	.922	.956	.681
02	.911	.935	.908	.938	.633
03	.905	.916	.895	.938	.629
04	.899	.913	.895	.931	.643
05	.899	.912	.889	.925	.758
06	.894	.916	.889	.925	.652
07	.888	.913	.889	.919	.653
08	.885	.903	.882	.913	.643
09	.888	.894	.876	.906	.629
10	.888	.891	.876	.900	.619
11	.877	.882	.869	.894	.619
12	.872	.881	.869	.888	.619
13	.866	.875	.863	.888	.638
14	.860	.873	.856	.881	.614
15	.860	.872	.850	.875	.610
16	.849	.868	.843	.875	.610
17	.849	.862	.843	.863	.605
18	.844	.856	.843	.863	.581
19	.850	.851	.837	.856	.600
20	.838	.845	.850	.850	.590
21	.832	.840	.824	.850	.586
22	.827	.838	.824	.844	.586
23	.827	.834	.817	.838	.581
24	.827	.828	.817	.831	.595
25	.816	.819	.824	.831	.571
26	.804	.817	.810	.825	.543
27	.804	.813	.804	.819	.571
28	.804	.808	.797	.819	.567
29	.804	.806	.797	.813	.576
30	.799	.809	.784	.906	.557
31	.793	.810	.778	.800	.533
32	.788	.807	.778	.794	.552
33	.780	.798	.771	.788	.548
34	.793	.799	.765	.788	.538
35	.782	.788	.765	.781	.548
36	.777	.785	.750	.775	.552
37	.782	.781	.752	.775	.524
38	.777	.781	.752	.769	.529
39	.777	.775	.745	.763	.529
40	.771	.770	.739	.763	.538
41	.765	.765	.729	.756	.529
42	.760	.759	.719	.750	.514
43	.754	.750	.725	.750	.505
44	.749	.747	.719	.744	.509
45	.743	.744	.719	.738	.524
46	.749	.744	.706	.731	.514
47	.743	.742	.699	.731	.510
48	.743	.732	.693	.725	.500
49	.732	.730	.693	.719	.510
50	.721	.730	.680	.713	.505
51	.715	.719	.680	.706	.500
52	.719	.717	.673	.700	.500
53	.704	.709	.673	.694	.490
54	.704	.701	.660	.688	.490
55	.693	.695	.654	.688	.486
56	.693	.694	.650	.681	.471
57	.693	.686	.654	.675	.468
58	.687	.684	.646	.669	.481
59	.682	.670	.641	.663	.476
60	.676	.664	.633	.663	.472



Run No. 13; w component

	Anemometer Position Number				
$\frac{z}{D}$	1	2	3	4	5
00	1.000	1.000	1.000	1.000	1.000
01	.[illegible]	.[illegible]	.[illegible]	.350	.560
02	.284,-1	.[illegible]	.[illegible]	.133	.405
03	.171,-1	.[illegible]	.[illegible]	.904,-1	.295
04	.160	.[illegible]	.[illegible]	.100	.249
05	.144	.[illegible]	.[illegible]	.107	.210
06	.[illegible],-1	.[illegible]	.[illegible]	.118	.196
07	-.140,-1	.[illegible]	.[illegible]	.883,-1	.241
08	-.109,-1	.[illegible]	.[illegible]	-.152,-1	.189
09	-.340,-1	.[illegible]	.[illegible]	-.280,-1	.176
10	.[illegible],-1	.[illegible]	.[illegible]	-.394,-2	.147
11	.126	.[illegible]	.[illegible]	-.142,-1	.128
12	.[illegible]	.[illegible]	.[illegible]	-.420,-2	.997,-1
13	.[illegible],-2	.[illegible]	.[illegible]	.341,-2	.710,-1
14	.[illegible],-1	.[illegible]	.[illegible]	.[illegible],-2	.[illegible],-1
15	.[illegible],-1	.[illegible]	.[illegible]	.[illegible],-2	.[illegible],-1
16	.[illegible],-1	.[illegible]	.[illegible]	.[illegible],-2	.[illegible],-1
17	.[illegible],-1	.[illegible]	.[illegible]	.[illegible],-2	.[illegible],-1
18	.[illegible],-1	.[illegible]	.[illegible]	.[illegible],-2	.[illegible],-1
19	.[illegible],-2	.[illegible]	.[illegible]	.[illegible],-1	.[illegible],-1
20	.[illegible],-1	.[illegible]	.[illegible]	-.114,-1	-.[illegible],-1
21	-.[illegible],-1	.[illegible]	.[illegible]	.[illegible],-1	-.[illegible],-2
22	-.[illegible],-1	.[illegible]	.[illegible]	.[illegible],-1	-.[illegible],-1
23	-.[illegible],-1	.[illegible]	.[illegible]	.[illegible],-1	.[illegible],-1
24	-.[illegible],-1	.[illegible]	.[illegible]	-.[illegible],-1	.[illegible],-1
25	-.[illegible],-1	.[illegible]	.[illegible]	-.[illegible],-1	.[illegible],-1
26	-.[illegible],-1	.[illegible]	.[illegible]	-.[illegible],-2	.[illegible],-1
27	-.[illegible],-1	.[illegible]	.[illegible]	.[illegible],-1	.[illegible],-1
28	-.[illegible],-1	.[illegible]	.[illegible]	.[illegible],-1	.[illegible],-1
29	-.[illegible],-1	.[illegible]	.[illegible]	.[illegible],-1	.105
30	.[illegible],-1	.[illegible]	.[illegible]	-.[illegible],-1	.111
31	.[illegible],-1	.[illegible]	.[illegible]	-.[illegible],-1	.[illegible]
32	-.[illegible],-2	.[illegible]	.[illegible]	-.[illegible],-1	.130
33	-.[illegible],-1	.[illegible]	.[illegible]	.[illegible],-1	.124
34	-.[illegible],-1	.[illegible]	.[illegible]	.[illegible],-1	.135
35	.[illegible],-1	.[illegible]	.[illegible]	.[illegible]	.[illegible]
36	.[illegible],-1	.[illegible]	.[illegible]	.[illegible],-1	.[illegible]
37	.[illegible],-1	.[illegible]	.[illegible]	.[illegible],-1	.[illegible]
38	.[illegible],-2	.[illegible]	.[illegible]	.[illegible],-1	.[illegible]
39	.[illegible]	.[illegible]	.[illegible]	.[illegible],-1	.[illegible]
40	-.[illegible],-1	.[illegible]	.[illegible]	.450,-1	.110
41	.[illegible],-2	.[illegible]	.[illegible]	.[illegible],-1	.147
42	-.[illegible],-1	.[illegible]	.[illegible]	.[illegible],-1	.[illegible]
43	-.[illegible],-1	.[illegible]	.[illegible]	-.[illegible],-2	.103
44	-.[illegible]	.[illegible]	.[illegible]	.220,-1	.119
45	-.[illegible]	.[illegible]	.[illegible]	.[illegible],-1	.[illegible]
46	-.[illegible],-1	.[illegible]	.[illegible]	.[illegible],-1	.114
47	.[illegible],-2	.[illegible]	.[illegible]	.[illegible],-1	.[illegible]
48	-.[illegible],-1	.[illegible]	.[illegible]	.[illegible],-1	.134
49	.[illegible],-2	.[illegible]	.[illegible]	.321,-1	.[illegible]
50	-.[illegible],-1	.[illegible]	.[illegible]	.[illegible],-1	.[illegible]
51	.[illegible],-1	.[illegible]	.[illegible]	.[illegible],-1	.[illegible]
52	.[illegible],-1	.[illegible]	.[illegible]	.[illegible],-1	.[illegible]
53	.[illegible],-1	.[illegible]	.[illegible]	.[illegible],-1	.[illegible]
54	.[illegible],-1	.[illegible]	.[illegible]	.[illegible],-3	.[illegible]
55	-.[illegible],-1	.[illegible]	.[illegible]	.[illegible],-1	.[illegible]
56	-.[illegible],-1	.[illegible]	.[illegible]	.[illegible],-1	.[illegible]
57	.[illegible],-1	.[illegible]	.[illegible]	.[illegible],-1	.[illegible]
58	.[illegible],-1	.[illegible]	.[illegible],-1	.[illegible],-1	.[illegible]
59	.[illegible],-1	.[illegible]	.[illegible],-1	.[illegible],-1	.[illegible]
60	-.[illegible],-1	.[illegible]	.[illegible],-1	.[illegible],-1	.[illegible],-1

Run No. 19; u component

K	Anemometer Position Number 1	2	3	4	5
00	1.000	1.000	1.000	1.000	1.000
01	.785	.815	.745	.797	.836
02	.648	.680	.658	.651	.730
03	.557	.583	.559	.546	.650
04	.491	.512	.479	.477	.578
05	.439	.455	.416	.440	.514
06	.389	.400	.381	.406	.464
07	.354	.360	.301	.350	.442
08	.317	.316	.322	.316	.401
09	.282	.283	.292	.279	.357
10	.248	.249	.274	.253	.318
11	.224	.225	.260	.232	.290
12	.213	.201	.233	.218	.244
13	.207	.196	.209	.210	.229
14	.197	.176	.190	.171	.1
15	.186	.151	.184	.172	.171
16	.178	.123	.171	.157	.159
17	.154	.104	.153	.133	.116
18	.136	.933,-1	.150	.112	.107
19	.119	.856,-1	.129	.101	.907,-1
20	.128	.703,-1	.135	.102	.902,-1
21	.122	.676,-1	.129	.101	.104
22	.117	.657,-1	.120	.916,-1	.115
23	.104	.640,-1	.123	.799,-1	.119
24	.940,-1	.556,-1	.117	.959,-1	.905,-1
25	.847,-1	.420,-1	.121	.908,-1	.892,-1
26	.900,-1	.443,-1	.125	.930,-1	.933,-1
27	.805,-1	.476,-1	.115	.863,-1	.851,-1
28	.631,-1	.545,-1	.[illegible],-1	.607,-1	.[illegible],-1
29	.625,-1	.520,-1	.740,-1	.671,-1	.777,-1
30	.700,-1	.550,-1	.824,-1	.829,-1	.[illegible],-1
31	.754,-1	.648,-1	.900,-1	.813,-1	.968,-1
32	.942,-1	.824,-1	.817,-1	.778,-1	.853,-1
33	.[illegible],-1	.913,-1	.[illegible],-1	.[illegible],-1	.[illegible],-1
34	.[illegible],-1	.970,-1	.[illegible],-1	.[illegible],-1	.[illegible],-1
35	.101	.[illegible],-1	.11[illegible]	.41[illegible],-1	.774,-1
36	.051,-1	.102	.12[illegible]	.413,-1	.[illegible],-1
37	.733,-1	.943,-1	.11[illegible]	.[illegible],-1	.707,-1
38	.822,-1	.101	.10[illegible]	.501,-1	.[illegible],-1
39	.830,-1	.957,-1	.11[illegible]	.[illegible],-1	.[illegible],-1
40	.700,-1	.[illegible],-1	.116	.477,-1	.[illegible],-1
41	.596,-1	.124	.132	.480,-1	.[illegible],-1
42	.594,-1	.131	.160	.[illegible],-1	.[illegible],-1
43	.398,-1	.128	.172	.[illegible],-1	.262,-1
44	.211,-1	.129	.172	.875,-1	.281,-1
45	.119,-1	.133	.162	.102	.[illegible],-1
46	-.122,-1	.117	.150	.116	-.[illegible],-3
47	.410,-2	.120	.156	.110	-.990,-2
48	-.139,-2	.136	.147	.111	-.[illegible],-1
49	-.369,-2	.151	.140	.106	-.159,-1
50	-.207,-1	.168	.146	.[illegible],-1	-.[illegible],-1
51	-.340,-1	.178	.152	.[illegible],-1	-.[illegible],-1
52	-.267,-1	.175	.145	.830,-1	-.201,-1
53	-.300,-1	.154	.140	.712,-1	-.[illegible],-1
54	-.950,-2	.167	.147	.714,-1	-.404,-1
55	.193,-1	.171	.165	.867,-1	-.657,-1
56	.228,-1	.170	.162	.[illegible],-1	-.767,-1
57	.152,-1	.169	.153	.757,-1	-.812,-1
58	.449,-1	.166	.151	.837,-1	-.834,-1
59	.685,-1	.176	.145	.839,-1	-.824,-1
60	.623,-1	.181	.122	.806,-1	-.795,-1

Run No. 15; v component

K	Anemometer Position Number 1	2	3	4	5
00	1.000	1.000	1.000	1.000	1.000
01	.839	.831	.863	.908	.874
02	.773	.780	.821	.878	.833
03	.734	.736	.777	.847	.790
04	.712	.708	.745	.824	.767
05	.679	.675	.721	.809	.751
06	.650	.661	.700	.794	.732
07	.632	.667	.682	.794	.724
08	.621	.643	.659	.779	.700
09	.603	.616	.637	.758	.682
10	.591	.595	.613	.744	.646
11	.574	.585	.599	.727	.624
12	.566	.572	.577	.714	.611
13	.547	.552	.565	.696	.599
14	.519	.537	.555	.681	.574
15	.506	.520	.537	.666	.552
16	.495	.487	.514	.650	.543
17	.475	.475	.506	.631	.534
18	.466	.458	.479	.616	.526
19	.466	.442	.461	.608	.512
20	.455	.428	.441	.609	.510
21	.436	.410	.424	.598	.505
22	.417	.391	.413	.598	.491
23	.397	.377	.411	.591	.477
24	.386	.376	.394	.580	.477
25	.362	.376	.383	.576	.472
26	.356	.370	.376	.568	.463
27	.361	.367	.366	.560	.466
28	.361	.356	.359	.560	.457
29	.351	.347	.346	.554	.455
30	.342	.336	.342	.553	.449
31	.345	.326	.337	.550	.436
32	.334	.299	.323	.544	.428
33	.318	.302	.314	.544	.426
34	.307	.274	.313	.537	.438
35	.299	.273	.296	.536	.441
36	.292	.267	.286	.528	.431
37	.279	.257	.293	.527	.440
38	.273	.249	.292	.523	.448
39	.271	.247	.308	.516	.455
40	.271	.230	.311	.509	.455
41	.255	.222	.313	.502	.462
42	.241	.222	.317	.499	.459
43	.259	.218	.306	.488	.460
44	.262	.212	.297	.476	.455
45	.255	.206	.308	.475	.458
46	.249	.208	.308	.463	.464
47	.249	.198	.305	.454	.464
48	.241	.202	.301	.444	.458
49	.246	.181	.290	.434	.447
50	.246	.188	.273	.431	.446
51	.240	.195	.266	.421	.455
52	.232	.186	.251	.410	.450
53	.232	.172	.248	.401	.451
54	.219	.171	.244	.390	.446
55	.215	.171	.223	.385	.446
56	.199	.168	.220	.378	.426
57	.190	.157	.213	.373	.426
58	.177	.153	.211	.366	.425
59	.171	.151	.205	.363	.419
60	.158	.157	.200	.360	.414

Run No. 15; w component

K	Anemometer Position Number 1	2	3	4	5
00	1.000	1.000	1.000	1.000	1.000
01	.237	.249	.304	.329	.218
02	.799,-1	.169	.230	.205	.153
03	.712,-1	.135	.182	.168	.100
04	.611,-1	.842,-1	.143	.931,-1	.110
05	.237,-1	.614,-1	.119	.708,-1	.677,-1
06	.443,-1	.416,-1	.911,-1	.779,-1	-.500,-2
07	.243,-1	-.816,-2	.147	.688,-1	.114,-1
08	-.113,-1	.589,-1	.874,-1	.553,-1	-.625,-2
09	-.527,-1	.149,-1	.809,-1	.492,-1	-.344,-1
10	-.415,-1	-.511,-2	.305,-1	.332,-1	-.315,-1
11	-.192,-1	.453,-1	.892,-2	.149,-1	-.315,-1
12	.361,-1	.485,-1	-.405,-2	-.110,-1	-.202,-1
13	.4[illegible],-1	.328,-1	-.474,-1	.147,-1	-.313,-1
14	.463,-1	.281,-1	-.561,-1	.100,-2	-.432,-1
15	.151,-1	-.837,-2	-.523,-1	.412,-1	-.269,-2
16	-.219,-1	.160,-1	-.528,-1	.636,-1	-.946,-2
17	.340,-1	-.100,-1	-.961,-2	.328,-1	-.665,-1
18	.137,-1	-.207,-1	-.852,-1	.325,-1	-.317,-1
19	.675,-1	-.705,-2	-.508,-1	.262,-1	-.431,-1
20	.650,-1	-.498,-1	-.664,-1	.172,-1	-.807,-1
21	.175,-1	-.448,-1	-.296,-1	.241,-1	-.107,-1
22	.102,-1	-.445,-1	-.434,-1	-.336,-2	.529,-2
23	.487,-1	-.720,-1	-.264,-2	-.174,-1	.551,-1
24	-.175,-1	-.422,-1	-.174,-2	-.520,-2	.157,-1
25	-.119,-1	-.232,-1	-.201,-1	.375,-1	.252,-2
26	-.137,-1	-.259,-1	-.378,-1	.305,-1	.285,-1
27	-.187,-1	-.296,-1	.764,-2	-.325,-1	.304,-1
28	-.317,-1	-.460,-1	-.748,-2	.191,-1	.546,-1
29	.311,-1	-.772,-1	.487,-3	.309,-1	.635,-1
30	-.415,-2	-.881,-1	.247,-1	.574,-1	.562,-2
31	-.840,-2	-.[illegible]26,-1	.254,-1	.320,-1	.469,-1
32	.323,-1	-.351,-1	.188,-1	.530,-1	-.395,-1
33	.599,-1	-.569,-1	.597,-2	.114,-1	-.386,-1
34	.235,-1	-.462,-1	.414,-1	.348,-1	-.117,-1
35	.130,-1	-.311,-1	.100,-1	.454,-1	.313,-1
36	.617,-1	-.463,-1	.339,-1	-.143,-1	-.121,-1
37	.154,-1	-.139,-1	-.919,-2	-.227,-1	.823,-2
38	.114,-1	-.563,-1	-.142,-1	-.128,-1	.304,-1
39	.111,-1	-.594,-1	.364,-2	-.936,-2	.231,-1
40	.267,-1	.623,-2	-.530,-1	-.282,-1	-.187,-1
41	.616,-1	.358,-1	.495,-1	-.149,-1	.767,-2
42	-.235,-1	-.122,-3	.127,-1	-.246,-1	-.322,-1
43	.991,-2	.609,-1	.392,-1	-.289,-1	-.119,-1
44	-.965,-2	-.254,-1	-.410,-1	.614,-3	.153,-2
45	-.487,-1	.296,-1	-.241,-1	-.910,-2	.297,-1
46	-.175,-1	-.259,-1	-.256,-1	-.318,-1	.826,-1
47	-.621,-1	-.267,-1	-.133,-1	.261,-2	.185,-1
48	-.642,-1	.23[illegible],-1	.193,-1	.431,-1	.776,-2
49	-.473,-1	.140,-1	-.636,-2	.394,-2	.622,-1
50	.143,-2	.309,-1	-.219,-1	.338,-1	.505,-1
51	-.642,-1	.344,-1	-.100,-1	.277,-1	.652,-1
52	-.129,-1	.148,-1	-.256,-1	.429,-1	.731,-1
53	-.317,-1	.287,-1	-.123,-1	.358,-1	.991,-1
54	.237,-1	-.584,-2	-.510,-4	.196,-1	.260,-1
55	.275,-1	-.248,-1	.210,-1	.227,-1	-.232,-1
56	.121,-1	-.191,-1	-.282,-3	.425,-1	.115,-1
57	.120,-1	.162,-1	.135,-1	.267,-1	.721,-2
58	.857,-2	.307,-1	.139,-1	.688,-2	-.455,-1
59	-.284,-1	-.728,-2	.350,-1	-.240,-1	-.337,-1
60	.213,-2	-.257,-1	-.233,-2	-.683,-2	.146,-1

Run No. 16; u component

K	Anemometer Position Number 1	2		4	5
00	1.000	1.000	1.000	1.000	1.000
01	.[illegible]	.[illegible]	.[illegible]	.[illegible]	.898
02	.814	.[illegible]	.[illegible]	.[illegible]	.827
03	.764	.758	.753	.762	.769
04	.720	.[illegible]	.707	.[illegible]	.721
05	.[illegible]	.[illegible]	.[illegible]	.690	.697
06	.628	.592	.[illegible]	.[illegible]	.654
07	.[illegible]	.552	.[illegible]	.617	.613
08	.553	.509	.527	.[illegible]	.584
09	.522	.[illegible]	.490	.556	.[illegible]
10	.[illegible]	.[illegible]	.[illegible]	.[illegible]	.542
11	.[illegible]	.[illegible]	.[illegible]	.[illegible]	.515
12	.[illegible]	.[illegible]	.[illegible]	.471	.[illegible]
13	.[illegible]	.[illegible]	.[illegible]	.447	.461
14	.[illegible]	.[illegible]	.[illegible]	.[illegible]	.429
15	.[illegible]	.[illegible]	.[illegible]	.412	.400
16	.[illegible]	.[illegible]	.[illegible]	.[illegible]	.378
17	.[illegible]	.[illegible]	.[illegible]	.[illegible]	.361
18	.[illegible]	.[illegible]	.[illegible]	.[illegible]	.341
19	.[illegible]	.[illegible]	.[illegible]	.[illegible]	.328
20	.[illegible]	.[illegible]	.[illegible]	.[illegible]	.[illegible]
21	.[illegible]	.[illegible]	.[illegible]	.[illegible]	.[illegible]
22	.[illegible]	.[illegible]	.[illegible]	.[illegible]	.[illegible]
23	.[illegible]	.[illegible]	.[illegible]	.[illegible]	.[illegible]
24	.[illegible]	.[illegible]	.[illegible]	.[illegible]	.[illegible]
25	.[illegible]	.[illegible]	.[illegible]	.[illegible]	.[illegible]
26	.[illegible]	.[illegible]	.[illegible]	.[illegible]	.[illegible]
27	.[illegible]	.[illegible]	.[illegible]	.[illegible]	.[illegible]
28	.[illegible]	.[illegible]	.[illegible]	.[illegible]	.[illegible]
29	.[illegible]	.[illegible]	.[illegible]	.[illegible]	.[illegible]
30	.[illegible]	.[illegible]	.[illegible]	.[illegible]	.[illegible]
31	.[illegible]	.[illegible]	.[illegible]	.[illegible]	.[illegible]
32	.[illegible]	.[illegible]	.[illegible]	.[illegible]	.[illegible]
33	.[illegible]	.[illegible]	.[illegible]	.[illegible]	.[illegible]
34	.[illegible]	.[illegible]	.[illegible]	.[illegible]	.[illegible]
35	.[illegible]	.[illegible]	.[illegible]	.[illegible]	.[illegible]
36	.[illegible]	.[illegible]	.[illegible]	.[illegible]	.[illegible]
37	.[illegible]	.[illegible]	.[illegible]	.[illegible]	.[illegible]
38	.[illegible]	.[illegible]	.[illegible]	.[illegible]	.[illegible]
39	.[illegible]	.[illegible]	.[illegible]	.[illegible]	.[illegible]
40	.[illegible]	.[illegible]	.[illegible]	.[illegible]	.[illegible]
41	.[illegible]	.[illegible]	.[illegible]	.[illegible]	.[illegible]
42	.[illegible]	.[illegible]	.[illegible]	.[illegible]	.[illegible]
43	.[illegible]	.[illegible]	.[illegible]	.[illegible]	.[illegible]
44	.[illegible]	.[illegible]	.[illegible]	.[illegible]	.[illegible]
45	.[illegible]	.[illegible]	.[illegible]	.[illegible]	.[illegible]
46	.[illegible]	.[illegible]	.[illegible]	.[illegible]	.[illegible]
47	.[illegible]	.[illegible]	.[illegible]	.[illegible]	.[illegible]
48	.[illegible]	.[illegible]	.[illegible]	.[illegible]	.[illegible]
49	.[illegible]	.[illegible]	.[illegible]	.[illegible]	.[illegible]
50	.[illegible]	.[illegible]	.[illegible]	.[illegible]	.[illegible]
51	.[illegible]	.[illegible]	.[illegible]	.[illegible]	.[illegible]
52	.[illegible]	.[illegible]	.[illegible]	.[illegible]	.[illegible]
53	.[illegible]	.[illegible]	.[illegible]	.[illegible]	.[illegible]
54	.[illegible]	.[illegible]	.[illegible]	.[illegible]	.[illegible]
55	.[illegible]	.[illegible]	.[illegible]	.[illegible]	.[illegible]
56	.[illegible]	.[illegible]	.[illegible]	.[illegible]	.[illegible]
57	.[illegible]	.[illegible]	.[illegible]	.[illegible]	.[illegible]
58	.[illegible]	.[illegible]	.[illegible]	.[illegible]	.[illegible]
59	.[illegible]	.[illegible]	.[illegible]	.[illegible]	.[illegible]
60	.[illegible]	.[illegible]	.[illegible]	.[illegible]	.[illegible]

Run No. 16; v component

K	Anemometer Position Number 1	2	[illegible]	4	5
00	1.000	1.000	1.000	1.000	1.000
01	.929	.913	.935	.941	.921
02	.887	.880	.905	.904	.882
03	.851	.854	.873	.877	.849
04	.821	.829	.864	.856	.822
05	.792	.810	.844	.840	.789
06	.768	.791	.823	.823	.770
07	.744	.778	.810	.815	.757
08	.732	.759	.789	.802	.730
09	.714	.753	.762	.797	.717
10	.708	.741	.748	.781	.691
11	.696	.734	.728	.775	.677
12	.690	.722	.721	.765	.655
13	.675	.703	.707	.749	.651
14	.679	.690	.694	.738	.637
15	.673	.684	.680	.727	.625
16	.661	.671	.662	.722	.607
17	.649	.658	.652	.706	.593
18	.631	.646	.646	.695	.576
19	.625	.633	.636	.690	.565
20	.613	.623	.628	.679	.554
21	.601	.620	.621	.674	.544
22	.585	.606	.616	.658	.540
23	.574	.607	.607	.647	.533
24	.566	.603	.604	.642	.531
25	.562	.601	.605	.642	.527
26	.563	.604	.600	.631	.526
27	.560	.606	.596	.620	.526
28	.555	.601	.588	.610	.522
29	.550	.589	.580	.599	.517
30	.550	.583	.573	.594	.508
31	.543	.577	.567	.588	.505
32	.542	.570	.562	.583	.499
33	.539	.568	.561	.578	.493
34	.530	.559	.553	.578	.492
35	.520	.549	.546	.567	.494
36	.514	.544	.537	.561	.487
37	.506	.539	.525	.551	.480
38	.500	.534	.515	.540	.479
39	.492	.523	.505	.529	.474
40	.478	.512	.494	.521	.471
41	.471	.503	.480	.509	.466
42	.465	.495	.467	.494	.468
43	.461	.491	.459	.487	.463
44	.454	.482	.456	.480	.463
45	.454	.470	.445	.473	.464
46	.447	.463	.433	.466	.457
47	.443	.453	.422	.460	.451
48	.439	.454	.412	.456	.444
49	.430	.446	.399	.454	.438
50	.425	.435	.395	.452	.432
51	.421	.437	.394	.449	.424
52	.415	.435	.386	.450	.416
53	.413	.439	.378	.451	.409
54	.411	.426	.369	.440	.391
55	.404	.419	.363	.430	.382
56	.406	.414	.356	.423	.376
57	.409	.408	.358	.417	.368
58	.410	.404	.359	.409	.356
59	.407	.402	.359	.401	.357
60	.399	.405	.358	.390	.343

Run No. 16; w component

	Anemometer Position Number				
K	1	2	3	4	5
00	1.000	1.000	1.000	1.000	1.000
01	.372	.356	.354	.275	.452
02	.225	.205	.242	.119	.317
03	.145	.144	.187	.857,-1	.244
04	.998,-1	.696,-1	.154	.872,-1	.170
05	.278,-1	.741,-1	.830,-1	.273,-1	.177
06	-.180,-1	.420,-1	.671,-1	-.897,-3	.155
07	-.210,-1	.413,-1	.575,-1	.229,-1	.161
08	.104,-1	.212,-1	.239,-1	.277,-1	.179
09	.879,-1	.144,-1	.218,-1	.357,-1	.162
10	.402,-1	.753,-2	-.397,-1	.362,-1	.133
11	.813,-2	.113,-2	-.447,-1	.217,-1	.132
12	.147,-1	-.287,-2	-.217,-1	.195,-1	.127
13	.724,-2	.128,-1	-.484,-1	.262,-2	.135
14	-.151,-1	.633,-2	-.402,-1	-.810,-2	.123
15	.135,-1	.151,-1	-.772,-2	-.344,-2	.111
16	-.112,-1	.354,-1	-.335,-1	.143,-3	.810,-1
17	-.392,-1	-.317,-1	-.323,-2	.305,-3	.762,-1
18	-.708,-1	.160,-1	-.816,-2	-.140,-1	.786,-1
19	-.734,-1	.149,-2	.962,-2	-.330,-2	.115
20	-.407,-1	-.658,-1	-.525,-1	-.165,-2	.156
21	-.260,-1	-.540,-2	-.180,-1	.117,-1	.126
22	-.609,-2	-.728,-1	.561,-3	.952,-2	.148
23	.444,-1	-.414,-1	-.228,-1	.172,-1	.786,-1
24	.257,-1	.652,-2	-.508,-2	.315,-2	.696,-1
25	.651,-1	-.873,-2	-.197,-1	.295,-1	.649,-1
26	.531,-1	-.318,-1	-.269,-1	.698,-1	.405,-1
27	.238,-1	-.197,-1	-.873,-2	.555,-1	.420,-1
28	.120,-2	-.189,-1	-.213,-1	.340,-1	.320,-1
29	.568,-2	-.310,-1	-.136,-1	.307,-1	.547,-1
30	-.378,-1	-.396,-1	-.119,-1	-.151,-2	.643,-1
31	-.568,-1	.262,-1	-.317,-1	-.151,-1	.521,-1
32	-.127,-1	.323,-2	-.315,-1	-.564,-1	.661,-1
33	.279,-2	-.413,-1	-.178,-1	-.712,-1	.532,-1
34	.107,-1	-.312,-1	-.766,-2	.279,-3	.460,-1
35	-.221,-1	- 677,-1	-.137,-1	.476,-1	.431,-1
36	.131,-2	-.500,-1	-.443,-1	.126,-1	.200,-1
37	-.547,-1	-.457,-2	-.515,-1	.100,-1	.565,-1
38	-.115,-1	-.810,-1	-.100	.342,-1	-.145,-2
39	-.335,-1	-.514,-1	-.498,-1	-.921,-2	-.196,-1
40	-.641,-1	-.472,-1	-.125	-.142,-1	.261,-1
41	-.594,-1	-.962,-1	-.111	.305,-1	.406,-1
42	-.802,-1	-.572,-1	-.835,-1	.228,-2	.582,-1
43	-.490,-1	-.410,-1	-.480,-1	-.247,-2	.294,-1
44	-.198,-1	-.505,-1	-.444,-1	.452,-1	.349,-1
45	-.435,-1	-.709,-1	-.553,-1	.329,-1	.123,-1
46	-.116,-1	-.486,-1	-.611,-1	.405,-1	.151,-2
47	.105,-1	-.308,-1	-.497,-1	.318,-1	.379,-1
48	.395,-1	-.216,-1	-.260,-1	.669,-1	.555,-1
49	.173,-2	.242,-3	-.542,-1	.768,-2	.484,-1
50	.766,-2	.266,-1	-.526,-1	.405,-1	.230,-1
51	.193,-2	.156,-3	-.134,-1	-.195,-1	-.200,-1
52	.505,-2	.741,-1	-.618,-2	.298,-2	.127,-1
53	-.552,-1	.473,-1	.160,-1	.567,-2	-.170,-1
54	-.724,-1	-.156,-1	-.447,-2	.151,-1	.261,-2
55	-.511,-1	-.639,-2	.464,-1	.490,-2	-.241,-1
56	-.372,-1	-.237,-1	.282,-1	.944,-2	-.423,-1
57	-.604,-1	-.270,-1	-.446,-2	-.595,-1	-.251,-2
58	-.321,-1	-.141,-1	.463,-1	-.214,-1	-.308,-1
59	-.213,-1	-.220,-1	.584,-1	-.616,-2	-.215,-1
60	-.698,-1	-.418,-1	.639,-1	.404,-1	-.160,-1

Run No. 17; u component

K	Anemometer Position Number 1	2	3	4	5
00	1.000	1.000	1.000	1.000	1.000
01	.718	.726	.729	.778	.679
02	.570	.555	.545	.618	.478
03	.464	.484	.435	.517	.358
04	.375	.390	.360	.441	.321
05	.325	.315	.301	.396	.287
06	.294	.292	.243	.374	.274
07	.263	.248	.222	.339	.275
08	.245	.195	.213	.306	.244
09	.236	.181	.177	.263	.191
10	.199	.179	.143	.234	.156
11	.175	.149	.112	.216	.171
12	.153	.119	.808,-1	.184	.179
13	.119	.913,-1	.658,-1	.143	.147
14	.102	.887,-1	.757,-1	.126	.131
15	.104	.104	.836,-1	.106	.101
16	.954,-1	.124	.887,-1	.910,-1	.906,-1
17	.103	.126	.108	.840,-1	.114
18	.103	.110	.120	.729,-1	.139
19	.102	.871,-1	.986,-1	.556,-1	.130
20	.836,-1	.655,-1	.801,-1	.167,-1	.122
21	.858,-1	.542,-1	.541,-1	.647,-2	.887,-1
22	.824,-1	.561,-1	.572,-1	.104,-1	.984,-1
23	.666,-1	.529,-1	.616,-1	.474,-1	.111
24	.440,-1	.326,-1	.479,-1	.616,-1	.943,-1
25	.393,-1	.197,-1	.243,-1	.661,-1	.921,-1
26	.226,-1	.105,-1	.166,-1	.801,-1	.783,-1
27	.174,-1	-.294,-2	.313,-1	.745,-1	.704,-1
28	.142,-1	.758,-2	.408,-1	.620,-1	.972,-1
29	.290,-1	.250,-1	.558,-1	.561,-1	.481,-1
30	.486,-1	.285,-1	.664,-1	.524,-1	.440,-1
31	.563,-1	.288,-1	.743,-1	.520,-1	.259,-1
32	.359,-1	.423,-1	.469,-1	.322,-1	-.972,-2
33	.316,-1	.148,-1	.356,-1	.314,-1	-.136,-1
34	.224,-1	.124,-1	.373,-1	.472,-1	.218,-2
35	.848,-2	.153,-1	.449,-1	.454,-1	.704,-2
36	-.274,-1	-.594,-2	.411,-1	.322,-1	-.176,-2
37	-.424,-1	-.137,-1	.551,-1	.333,-1	-.123,-1
38	-.421,-1	-.335,-2	.524,-1	.503,-1	-.244,-2
39	-.265,-1	.668,-3	.363,-1	.692,-1	.153,-1
40	-.185,-1	.308,-3	.438,-1	.776,-1	-.676,-2
41	-.879,-2	.548,-2	.692,-1	.104	-.748,-2
42	-.827,-2	-.187,-2	.805,-1	.111	.850,-2
43	-.103,-1	-.194,-1	.575,-1	.807,-1	.208,-1
44	-.193,-1	-.471,-1	.291,-1	.505,-1	.638,-2
45	-.375,-1	-.639,-1	.353,-1	.382,-1	-.238,-2
46	-.334,-1	-.708,-1	.562,-1	.421,-1	.162,-1
47	-.452,-1	-.665,-1	.301,-1	.575,-1	.525,-2
48	-.274,-1	-.668,-1	.232,-2	.667,-1	-.197,-1
49	-.372,-1	-.700,-1	.126,-1	.715,-1	-.522,-1
50	-.570,-1	-.445,-1	.318,-1	.530,-1	-.503,-1
51	-.616,-1	-.569,-1	.421,-1	.376,-1	-.425,-1
52	-.749,-1	-.697,-1	.394,-1	.331,-1	-.192,-1
53	-.904,-1	-.674,-1	.183,-1	.329,-1	.440,-2
54	-.769,-1	-.526,-1	-.118,-1	.149,-1	-.594,-2
55	-.206,-1	-.277,-1	-.483,-1	-.988,-3	-.181,-1
56	.126,-1	.790,-3	-.346,-1	-.106,-1	-.235,-1
57	.511,-1	-.723,-3	-.275,-1	-.134,-2	-.500,-2
58	.309,-1	.787,-2	-.101,-1	-.171,-1	.645,-2
59	.407,-1	.202,-1	.166,-1	-.392,-1	.330,-1
60	.477,-1	.301,-2	.229,-1	-.476,-1	.304,-1

Run No. 17; v component

K	Anemometer Position Number 1	2	3	4	5
00	1.000	1.000	1.000	1.000	1.000
01	.348	.413	.401	.374	.289
02	.192	.213	.234	.264	.209
03	.155	.160	.147	.188	.132
04	.125	.129	.881,-1	.904,-1	.135
05	.130	.106	.128	.930,-1	.104
06	.108	.72[illegible],-1	.119	.[illegible]06,-1	.814,-1
07	.121	.427,-1	.875,-1	.798,-1	.107
08	.109	.530,-1	.324,-1	.327,-1	.696,-1
09	.992,-1	.804,-1	.991,-1	.591,-1	.677,-1
10	.721,-1	.121	.122	.609,-1	.307,-1
11	.824,-1	.104	.761,-1	.535,-1	.220,-1
12	.832,-1	.923,-1	.810,-1	.274,-1	.333,-1
13	.698,-1	.909,-1	.957,-1	.505,-1	.390,-1
14	.736,-1	.585,-1	.879,-1	.339,-1	.448,-1
15	.565,-1	.748,-1	.121	.276,-1	.239,-2
16	.108	.759,-1	.150	.365,-1	.576,-1
17	.954,-1	.664,-1	.934,-1	.150,-1	.402,-1
18	.272,-1	.825,-1	.690,-1	.367,-1	.311,-1
19	.939,-1	.706,-1	.919,-1	.196,-1	.851,-1
20	.557,-1	.951,-1	.790,-1	.547,-1	.125,-1
21	.589,-1	.958,-1	.580,-1	.467,-2	.602,-1
22	.840,-1	.804,-1	.501,-1	-.222,-1	.362,-1
23	.145,-1	.762,-1	.367,-1	-.136,-1	.396,-1
24	.146,-2	.469,-1	.438,-1	-.102,-1	.339,-1
25	.718,-1	.510,-1	.733,-1	-.557,-2	.901,-2
26	.924,-1	.523,-1	.832,-2	.659,-2	.894,-1
27	.611,-1	.487,-1	.468,-1	-.189,-1	.112
28	.679,-1	.601,-1	.408,-1	-.113,-1	.913,-1
29	.847,-1	.622,-1	.776,-1	-.187,-1	.658,-1
30	.411,-1	.538,-1	.977,-1	.114,-1	.745,-1
31	.286,-1	.662,-1	.583,-1	.346,-1	.417,-1
32	.824,-1	.690,-1	.673,-1	.379,-1	.292,-1
33	.104	.569,-1	.527,-1	.581,-1	.702,-1
34	.735,-1	.521,-1	.334,-1	.460,-1	.720,-1
35	.737,-1	.543,-1	.894,-1	.953,-1	.727,-1
36	.992,-1	.375,-1	.740,-1	.127	.494,-1
37	.624,-1	.648,-1	.315,-1	.111	.218,-1
38	.342,-1	.993,-1	.844,-1	.907,-1	.240,-1
39	.373,-1	.769,-1	.728,-1	.695,-1	-.140,-1
40	.737,-1	.909,-1	.864,-1	.401,-1	.640,-1
41	.490,-1	.734,-1	.857,-1	.557,-1	.479,-1
42	.712,-1	.569,-1	.989,-1	.357,-1	.609,-1
43	.794,-1	.260,-1	.100	.539,-1	.944,-1
44	.102	.399,-1	.130	.577,-1	.366,-1
45	.969,-1	.452,-1	.351,-1	.726,-1	.207,-1
46	.715,-1	.491,-1	.975,-1	.443,-1	.145,-1
47	.623,-1	.679,-1	.796,-1	.268,-1	.567,-1
48	.809,-1	.615,-1	.901,-1	.410,-1	.938,-1
49	.100	.720,-1	.104	.154,-2	.109
50	.119	.846,-1	.844,-1	.340,-1	.876,-1
51	.156	.699,-1	.597,-1	.420,-1	.714,-1
52	.158	.294,-1	.683,-1	.501,-1	.126
53	.126	.563,-1	.832,-1	.969,-1	.991,-1
54	.141	.162,-1	.692,-1	.762,-1	.789,-1
55	.101	.310,-1	.554,-1	.457,-1	.560,-1
56	.102	.655,-1	.514,-1	.130,-1	.101
57	.102	.916,-1	.318,-1	.358,-1	.820,-1
58	.977,-1	.825,-1	.210,-1	-.328,-1	.530,-1
59	.566,-1	.656,-1	.420,-1	.119,-2	.888,-2
60	.615,-1	.692,-1	.767,-1	-.265,-1	.430,-1

Run No. 17; v component

	Anemometer Position Number				
K	1	2	3	4	5
00	1.000	1.000	1.000	1.000	1.000
01	.950,-1	.880,-1	.123	.152	.121
02	.300,-1	-.336,-1	.108,-1	.526,-1	.815,-1
03	.645,-1	.448,-1	.332,-1	.231,-1	-.970,-2
04	.592,-1	-.256,-3	.972,-1	.390,-1	.259,-2
05	.394,-1	.270,-1	.477,-1	-.309,-2	-.780,-2
06	-.108,-1	.109,-1	-.145,-1	-.139,-2	-.699,-1
07	.190,-2	-.378,-1	-.113,-1	-.228,-1	.149,-1
08	.746,-2	-.663,-2	-.398,-1	.359,-1	.778,-1
09	.188,-1	-.183,-1	.860,-2	-.218,-1	.389,-1
10	-.259,-1	.360,-1	-.118,-1	.205,-2	.342,-1
11	-.227,-1	.271,-1	.117,-3	-.559,-2	.501,-2
12	-.113,-1	-.481,-1	-.684,-2	.209,-1	.301,-1
13	-.104,-1	.118,-1	-.578,-2	.126,-1	.479,-2
14	.336,-1	.214,-1	-.508,-1	.920,-1	.672,-1
15	-.333,-2	.124,-1	-.402,-2	.6[illegible],-2	.530,-2
16	-.233,-1	.146,-1	-.442,-1	.572,-2	.218,-1
17	.444,-1	-.236,-1	.137,-1	.152,-1	.350,-1
18	.449,-1	-.154,-1	.538,-1	.441,-1	.206,-1
19	-.240,-1	.378,-1	.453,-2	.403,-1	.303,-1
20	-.352,-1	.112,-1	.177,-1	.339,-1	.283,-1
21	-.927,-1	-.250,-1	-.248,-1	-.250,-1	-.346,-1
22	.137,-3	.393,-1	-.177,-1	.195,-1	-.242,-1
23	.234,-1	-.351,-1	-.421,-1	.[illegible],-1	.146,-1
24	-.407,-1	-.191,-1	-.240,-2	.[illegible],-2	-.405,-1
25	.183,-1	.240,-1	-.209,-2	.337,-1	-.208,-1
26	.247,-1	.151,-2	-.142,-1	.742,-1	-.472,-1
27	.723,-1	-.197,-1	-.[illegible],-1	.609,-1	.269,-1
28	.186,-1	.316,-1	-.135,-2	.152,-2	.162,-1
29	-.364,-1	.175,-2	-.335,-3	.139,-1	.670,-1
30	.111,-1	.[illegible],-2	.[illegible],-3	.740,-2	-.190,-1
31	.479,-1	.185,-1	.[illegible],-2	.[illegible],-1	-.316,-2
32	-.[illegible],-2	-.335,-1	-.[illegible],-1	-.[illegible],-1	.105,-1
33	.[illegible],-2	.254,-1	.[illegible],-1	-.[illegible],-1	.[illegible],-2
34	.[illegible],-1	-.[illegible],-2	.145,-1	-.[illegible],-2	-.554,-1
35	.[illegible],-1	-.[illegible],-2	.[illegible],-2	.[illegible],-1	.194,-1
36	.458,-1	.[illegible],-1	.427,-1	.[illegible],-1	-.146,-1
37	-.[illegible],-1	-.[illegible],-1	.[illegible],-1	.[illegible],-1	-.[illegible],-1
38	-.[illegible],-1	-.514,-1	.134,-1	-.152,-1	.[illegible],-2
39	-.464,-1	.[illegible],-1	.[illegible],-1	.[illegible],-1	-.[illegible],-2
40	-.[illegible],-1	-.[illegible],-1	.[illegible],-1	-.[illegible],-2	-.[illegible],-1
41	-.214,-1	-.[illegible],-1	.[illegible],-1	.[illegible],-1	.[illegible],-1
42	-.156,-1	-.117,-1	.[illegible],-1	.[illegible],-1	-.[illegible],-1
43	-.[illegible],-1	.[illegible],-1	.[illegible],-1	.[illegible],-1	.[illegible],-1
44	.[illegible],-1	-.[illegible],-2	-.[illegible],-1	-.[illegible],-1	-.[illegible],-2
45	.[illegible],-2	.[illegible],-1	-.[illegible],-1	.[illegible],-1	-.[illegible],-1
46	.[illegible],-2	-.[illegible],-1	.[illegible],-1	-.[illegible],-1	.[illegible],-1
47	-.[illegible],-1	.[illegible],-2	-.[illegible],-1	-.[illegible],-1	.[illegible],-1
48	-.[illegible],-2	-.[illegible],-2	-.[illegible],-1	-.[illegible],-1	.[illegible],-1
49	-.[illegible],-1	-.[illegible],-1	-.[illegible],-1	-.[illegible],-2	.817,-1
50	.[illegible],-2	.[illegible],-1	-.[illegible],-2	.[illegible],-2	.371,-1
51	-.[illegible],-2	.[illegible],-1	-.[illegible],-2	-.[illegible],-1	.131,-1
52	-.814,-2	.181,-1	.407,-1	-.772,-2	-.413,-1
53	.[illegible],-2	-.[illegible],-2	.[illegible],-1	.[illegible],-1	.169,-1
54	-.[illegible],-2	-.275,-1	-.[illegible],-1	.[illegible],-2	.[illegible],-1
55	-.180,-1	-.[illegible],-2	-.[illegible],-2	.134,-2	.530,-1
56	.300,-2	.[illegible],-2	.541,-2	-.[illegible],-2	.214,-1
57	-.[illegible],-2	.[illegible],-2	-.[illegible],-1	.[illegible],-1	-.385,-2
58	-.181,-1	.259,-1	-.[illegible],-2	.[illegible],-1	.251,-1
59	-.122,-1	.349,-1	.242,-1	.[illegible],-1	.107,-1
60	.235,-1	.584,-2	.280,-1	.407,-1	-.[illegible],-2

Run No. 18; u component

K	Anemometer Position Number 1	2	3	4	5
00	1.000	1.000	1.000	1.000	1.000
01	.650	.703	.615	.614	.632
02	.433	.484	.378	.427	.400
03	.339	.387	.247	.316	.291
04	.257	.332	.108	.251	.231
05	.239	.256	.155	.223	.189
06	.181	.229	.118	.190	.173
07	.114	.199	.111	.177	.185
08	.566,-1	.194	.765,-1	.147	.155
09	.903,-1	.163	.504,-1	.109	.127
10	.113	.144	.079,-1	.103	.114
11	.117	.128	.970,-1	.137	.105
12	.125	.130	.100	.135	.131
13	.119	.140	.858,-1	.106	.137
14	.100	.104	.594,-1	.954,-1	.121
15	.102	.809,-1	.455,-1	.768,-1	.104
16	.786,-1	.700,-1	.246,-1	.356,-1	.104
17	.100	.737,-1	.294,-1	.651,-1	.112
18	.137	.684,-1	.879,-2	.800,-1	.142
19	.134	.850,-1	-.174,-1	.933,-1	.118
20	.107	.102	-.360,-1	.992,-1	.803,-1
21	.102	.102	-.470,-1	.105	.715,-1
22	.842,-1	.111	-.341,-1	.123	.861,-1
23	.804,-1	.115	-.316,-1	.148	.920,-1
24	.100	.123	-.220,-1	.188	.106
25	.914,-1	.134	-.571,-1	.191	.108
26	.775,-1	.151	-.632,-1	.190	.981,-1
27	.844,-1	.142	-.402,-1	.174	.121
28	.899,-1	.132	-.427,-1	.146	.138
29	.126	.125	-.449,-1	.130	.142
30	.121	.130	-.377,-1	.140	.137
31	.137	.171	-.966,-2	.169	.139
32	.161	.187	.200,-1	.184	.124
33	.156	.187	.542,-1	.209	.106
34	.154	.169	.344,-1	.185	.109
35	.159	.137	.124,-1	.178	.130
36	.150	.124	.235,-1	.161	.156
37	.169	.139	.427,-1	.137	.147
38	.102	.101	.410,-1	.135	.150
39	.104	.855,-1	.526,-1	.142	.129
40	-.159	.832,-1	.607,-1	.145	.127
41	.124	.111	.919,-1	.162	.114
42	.120	.109	.141	.172	.121
43	.109	.109	.105	.137	.141
44	.881,-1	.118	.121	.120	.110
45	.106	.156	.190	.115	.821,-1
46	.116	.170	.121	.132	.712,-1
47	.119	.188	.126	.136	.728,-1
48	.881,-1	.199	.118	.129	.568,-1
49	.514,-1	.219	.979,-1	.147	.686,-1
50	.697,-1	.229	.543,-1	.178	.821,-1
51	.756,-1	.186	.564,-1	.190	.103
52	.456,-1	.159	.517,-1	.183	.122
53	.419,-1	.166	.799,-1	.148	.133
54	.553,-1	.138	.786,-1	.140	.150
55	.658,-1	.961,-1	.910,-1	.154	.153
56	.850,-1	.116	.859,-1	.159	.135
57	.667,-2	.122	.662,-1	.151	.157
58	.739,-1	.124	.662,-1	.124	.121
59	.814,-1	.122	.316,-1	.128	.984,-1
60	.847,-1	.116	.305,-1	.100	.105

Run No. 18; v component

K	Anemometer Position Number 1	2	3	4	5
00	1.000	1.000	1.000	1.000	1.000
01	.345	.380	.381	.430	.347
02	.263	.255	.258	.299	.279
03	.259	.230	.272	.251	.235
04	.237	.220	.234	.262	.204
05	.206	.248	.250	.254	.233
06	.238	.257	.276	.235	.242
07	.220	.281	.263	.241	.229
08	.250	.257	.244	.260	.228
09	.235	.240	.263	.242	.246
10	.263	.300	.217	.270	.263
11	.257	.244	.240	.276	.260
12	.266	.263	.271	.238	.241
13	.278	.278	.304	.245	.214
14	.243	.269	.246	.313	.248
15	.247	.208	.277	.317	.280
16	.268	.250	.270	.241	.277
17	.257	.245	.263	.237	.243
18	.223	.256	.291	.272	.264
19	.255	.227	.301	.303	.280
20	.235	.275	.265	.206	.273
21	.230	.260	.263	.265	.280
22	.211	.201	.272	.248	.194
23	.258	.232	.299	.246	.255
24	.240	.236	.312	.250	.223
25	.255	.248	.287	.266	.233
26	.280	.270	.253	.270	.251
27	.204	.272	.287	.252	.230
28	.208	.250	.229	.293	.271
29	.251	.279	.247	.230	.208
30	.244	.263	.265	.251	.243
31	.217	.200	.243	.273	.253
32	.216	.223	.283	.252	.239
33	.173	.215	.274	.269	.230
34	.185	.240	.261	.277	.193
35	.238	.234	.252	.253	.209
36	.235	.240	.261	.279	.223
37	.229	.253	.252	.259	.212
38	.229	.222	.270	.247	.217
39	.200	.242	.263	.248	.211
40	.233	.197	.211	.301	.255
41	.233	.250	.307	.300	.230
42	.242	.247	.278	.287	.242
43	.220	.237	.227	.213	.248
44	.222	.211	.247	.235	.217
45	.230	.206	.262	.241	.272
46	.214	.201	.229	.270	.266
47	.184	.215	.236	.265	.250
48	.181	.226	.227	.221	.186
49	.216	.219	.229	.223	.194
50	.227	.253	.171	.233	.209
51	.213	.226	.254	.263	.218
52	.191	.195	.240	.250	.194
53	.221	.218	.187	.225	.200
54	.203	.236	.212	.269	.184
55	.225	.209	.238	.285	.189
56	.216	.212	.213	.249	.239
57	.218	.201	.249	.213	.166
58	.224	.151	.199	.197	.178
59	.169	.204	.204	.191	.203
60	.175	.194	.218	.220	.207



Run No. 18; w component

	Anemometer Position Number				
K	1	2	3	4	5
00	1.000	1.000	1.000	1.000	1.000
01	.213,-1	.302,-1	.420,-1	.112	.346,-1
02	.132,-1	-.547,-1	.229,-1	.149,-1	.794,-1
03	.170,-1	-.[illegible],-1	-.[illegible], 2	.545,-2	.626,-1
04	.291,-1	.115,-1	-.227,-1	.155,-1	.196,-1
05	-.656,-4	-.[illegible],-1	.21[illegible],-1	-.1[illegible],-1	.891,-2
06	.641,-2	.177,-1	.375,-1	-.[illegible],-1	.700,-2
07	.212,-1	.230,-1	.[illegible],-2	.[illegible],-2	.696,-1
08	.946,-3	.[illegible],-1	.1[illegible],-1	-.710,-2	.249,-1
09	.187,-1	.[illegible],-1	-.[illegible],-1	-.[illegible],-	.131,-1
10	-.[illegible],-1	.11[illegible],-1	-.[illegible],-1	.[illegible],-1	-.529,-2
11	.[illegible],-1	.[illegible],-1	-.[illegible],-	.723,-2	-.[illegible],-2
12	.525,-1	.129,-1	.[illegible],-1	.[illegible],-2	-.187,-1
13	.[illegible],-1	-.[illegible],-1	.[illegible],-1	.[illegible],-1	.452,-1
14	.101,-1	.[illegible],-1	.[illegible],-1	-.[illegible],-2	.[illegible],-2
15	-.[illegible],-1	.[illegible],-1	.[illegible],-1	.[illegible],-1	-.[illegible],-1
16	-.[illegible],-2	-.[illegible],-	.[illegible],-1	.[illegible],-1	.[illegible],-1
17	.[illegible],-2	.[illegible],-2	.[illegible],-1	-.[illegible],-1	-.[illegible],-1
18	.[illegible],-1	.[illegible],-1	.[illegible],-2	.[illegible],-1	-.[illegible],-1
19	.[illegible],-1	.[illegible],-2	.[illegible],-1	-.[illegible],-1	-.[illegible],-1
20	.[illegible],-1	.[illegible],-1	.[illegible],-1	-.[illegible],-2	-.[illegible],-1
21	-.[illegible],-1	-.[illegible],-2	-.[illegible],-1	.[illegible],-2	.[illegible],-2
22	-.[illegible],-1	-.[illegible],-1	-.[illegible],-1	-.[illegible],-1	.[illegible],-2
23	-.[illegible],-1	.[illegible],-2	-.[illegible],-1	.[illegible],-1	.[illegible],-2
24	.[illegible],-1	.[illegible],-1	.[illegible],-2	.[illegible],-1	.[illegible],-1
25	-.[illegible],-1	-.[illegible],-1	-.[illegible],-	.[illegible],-1	.[illegible],-1
26	-.[illegible],-1	-.[illegible],-1	.[illegible],-1	.[illegible],-1	-.[illegible],-1
27	-.[illegible],-2	.[illegible],-2	.[illegible],-2	-.[illegible],-1	.[illegible],-2
28	-.[illegible],-1	.[illegible],-1	.[illegible],-2	-.[illegible],-1	.[illegible],-1
29	-.[illegible],-1	.[illegible],-2	.[illegible],-2	.[illegible],-1	.[illegible],-2
30	.[illegible],-1	.[illegible],-2	.[illegible],-1	.[illegible],-1	-.[illegible],-1
31	.[illegible],-1	-.[illegible],-	.[illegible],-1	.[illegible],-1	.[illegible],-1
32	-.[illegible],-1	.[illegible],-1	.[illegible],-1	.[illegible],-1	-.[illegible],-1
33	-.[illegible],-1	-.[illegible],-1	-.[illegible],-1	.[illegible],-1	-.[illegible],-2
34	.[illegible],-2	-.[illegible],-2	-.[illegible],-1	.[illegible],-2	-.[illegible],-2
35	.[illegible],-2	-.[illegible],-1	.[illegible],-1	-.[illegible],-2	.[illegible],-1
36	.[illegible],-1	.[illegible],-1	.[illegible],-1	.[illegible],-1	.[illegible],-1
37	-.[illegible],-1	-.[illegible],-1	.[illegible],-1	.[illegible],-1	.[illegible],-1
38	-.[illegible],-1	-.[illegible],-1	.[illegible],-1	.[illegible],-2	.[illegible],-1
39	.[illegible]	-.[illegible],-1	-.[illegible],-1	.[illegible],-1	-.[illegible],-1
40	-.[illegible],-1	-.[illegible],-2	-.[illegible],-1	.[illegible],-2	-.[illegible],-1
41	.[illegible],-2	.[illegible],-1	.[illegible],-1	.[illegible],-1	-.[illegible],-2
42	.[illegible],-1	.[illegible],-1	-.[illegible],-1	.[illegible],-1	.[illegible],-1
43	.[illegible],-2	.[illegible],-1	.[illegible],-1	.[illegible],-	-.[illegible],-1
44	-.[illegible],-2	.[illegible],-1	.[illegible],-1	-.[illegible],-1	.[illegible],-1
45	-.[illegible],-1	-.[illegible],-1	.[illegible],-1	.[illegible],-2	.[illegible],-1
46	-.[illegible],-1	-.[illegible],-1	.[illegible],-1	.[illegible],-1	.[illegible],-2
47	-.[illegible],-2	-.[illegible],-1	.[illegible],-1	.[illegible],-1	.[illegible],-1
48	.[illegible],-1	-.[illegible],-2	.[illegible],-1	.[illegible],-1	.[illegible],-2
49	-.[illegible],-1	-.[illegible],-1	.[illegible],-1	-.[illegible],-1	.[illegible],-1
50	.[illegible],-1	.[illegible],-1	.[illegible],-1	-.[illegible],-1	.[illegible],-1
51	.[illegible],-1	-.[illegible],-	-.[illegible],-1	-.[illegible],-1	.[illegible],-1
52	-.[illegible],-2	.[illegible],-2	-.[illegible],-2	.[illegible],-2	.[illegible],-1
53	-.[illegible],-1	-.[illegible],-1	-.[illegible],-2	.[illegible],-2	-.[illegible],-1
54	-.[illegible],-1	.[illegible],-1	.[illegible],-1	.[illegible],-1	-.[illegible],-2
55	.[illegible],-1	.[illegible],-1	-.[illegible],-1	.[illegible],-2	.[illegible],-2
56	.[illegible],-1	-.[illegible],-1	.[illegible],-1	.[illegible],-1	-.[illegible],-1
57	-.[illegible],-1	.[illegible],-1	-.[illegible],-1	.[illegible],-1	.[illegible],-1
58	-.[illegible],-1	-.[illegible],-1	-.[illegible],-	.[illegible],-1	-.[illegible],-1
59	.[illegible],-1	.[illegible],-2	-.[illegible],-1	-.[illegible],-1	-.[illegible],-1
60	.[illegible],-1	-.[illegible],-1	-.[illegible],-1	-.[illegible],-1	.[illegible],-1

Run No. 19; u component

K	Anemometer Position Number 1	2	3	4	5
00	1.000	1.000	1.000	1.000	1.000
01	.801	.846	.821	.842	.814
02	.706	.740	.695	.748	.676
03	.637	.677	.611	.676	.596
04	.572	.642	.553	.637	.532
05	.522	.602	.506	.604	.472
06	.479	.571	.461	.561	.423
07	.447	.547	.422	.529	.390
08	.433	.516	.385	.514	.356
09	.400	.480	.343	.507	.335
10	.370	.433	.313	.493	.311
11	.367	.402	.296	.486	.286
12	.336	.386	.274	.482	.253
13	.326	.366	.271	.460	.236
14	.313	.344	.258	.446	.213
15	.301	.330	.242	.435	.196
16	.283	.309	.226	.414	.180
17	.259	.281	.207	.399	.182
18	.242	.266	.194	.388	.174
19	.242	.250	.191	.374	.183
20	.228	.233	.183	.360	.186
21	.215	.216	.189	.344	.182
22	.211	.198	.184	.340	.169
23	.203	.198	.182	.328	.156
24	.187	.188	.180	.333	.157
25	.157	.169	.165	.321	.158
26	.118	.155	.146	.302	.164
27	.108	.137	.134	.293	.168
28	.102	.124	.115	.277	.164
29	.100	.103	.921,-1	.258	.152
30	.831,-1	.854,-1	.853,-1	.245	.129
31	.781,-1	.805,-1	.847,-1	.242	.115
32	.746,-1	.740,-1	.863,-1	.232	.106
33	.647,-1	.528,-1	.621,-1	.218	.957,-1
34	.522,-1	.384,-1	.390,-1	.198	.883,-1
35	.487,-1	.212,-1	.271,-1	.175	.846,-1
36	.334,-1	.622,-2	.402,-1	.160	.803,-1
37	.101,-1	-.689,-2	.500,-1	.150	.654,-1
38	-.335,-2	-.125,-1	.553,-1	.145	.580,-1
39	-.166,-1	-.144,-1	.375,-1	.132	.702,-1
40	-.231,-1	-.890,-2	.191,-1	.122	.691,-1
41	-.446,-1	-.228,-1	.257,-2	.106	.516,-1
42	-.468,-1	-.364,-1	-.842,-2	.101	.326,-1
43	-.458,-1	-.383,-1	-.257,-1	.993,-1	.104,-1
44	-.543,-1	-.372,-1	-.374,-1	.835,-1	.872,-2
45	-.776,-1	-.259,-1	-.637,-1	.773,-1	.244,-1
46	-.741,-1	-.138,-1	-.737,-1	.716,-1	.464,-1
47	-.811,-1	-.933,-2	-.900,-1	.730,-1	.606,-1
48	-.796,-1	-.996,-2	-.108	.647,-1	.633,-1
49	-.657,-1	-.148,-1	-.113	.442,-1	.548,-1
50	-.697,-1	-.250,-1	-.121	.781,-2	.432,-1
51	-.617,-1	-.189,-1	-.110	-.849,-2	.360,-1
52	-.522,-1	-.176,-1	-.116	-.263,-1	.402,-1
53	-.602,-1	-.752,-2	-.109	-.457,-1	.299,-1
54	-.572,-1	-.132,-1	-.113	-.496,-1	.206,-1
55	-.537,-1	-.772,-2	-.123	-.432,-1	.223,-1
56	-.488,-1	-.265,-3	-.119	-.378,-1	.233,-1
57	-.502,-1	.488,-2	-.121	-.428,-1	.411,-2
58	-.465,-1	.969,-2	-.138	-.583,-1	.115,-1
59	-.396,-1	.571,-2	-.151	-.536,-1	.116,-1
60	-.438,-1	.139,-1	-.151	-.489,-1	.114,-1

Run No. 19; v component

K	Anemometer Position Number 1	2	3	4	5
00	1.000	1.000	1.000	1.000	1.000
01	.766	.772	.834	.868	.829
02	.714	.746	.779	.816	.763
03	.688	.692	.736	.778	.717
04	.642	.657	.706	.745	.671
05	.618	.632	.691	.726	.652
06	.603	.598	.656	.703	.628
07	.587	.578	.638	.693	.608
08	.564	.560	.604	.679	.597
09	.534	.528	.571	.660	.570
10	.508	.501	.529	.651	.554
11	.491	.481	.522	.632	.540
12	.460	.455	.528	.618	.517
13	.438	.445	.512	.604	.510
14	.400	.421	.480	.590	.484
15	.395	.407	.458	.590	.472
16	.382	.390	.439	.580	.464
17	.370	.370	.404	.587	.449
18	.355	.353	.384	.552	.439
19	.340	.341	.377	.534	.402
20	.321	.342	.358	.514	.370
21	.293	.345	.350	.500	.376
22	.268	.324	.336	.495	.345
23	.260	.301	.326	.505	.347
24	.252	.281	.325	.500	.350
25	.234	.271	.324	.491	.345
26	.228	.241	.319	.481	.348
27	.223	.215	.317	.476	.339
28	.213	.208	.314	.472	.318
29	.190	.205	.305	.462	.314
30	.176	.209	.300	.462	.303
31	.170	.195	.294	.456	.287
32	.154	.196	.298	.430	.279
33	.159	.183	.297	.427	.279
34	.147	.190	.298	.417	.276
35	.153	.193	.294	.420	.273
36	.146	.192	.293	.405	.246
37	.151	.189	.294	.390	.239
38	.166	.198	.291	.379	.234
39	.184	.204	.275	.379	.237
40	.167	.199	.264	.356	.241
41	.161	.198	.248	.339	.216
42	.158	.187	.240	.323	.211
43	.159	.185	.240	.323	.190
44	.169	.185	.231	.315	.176
45	.160	.176	.220	.308	.179
46	.162	.175	.217	.305	.159
47	.158	.170	.206	.304	.162
48	.181	.180	.212	.297	.155
49	.177	.173	.216	.291	.148
50	.157	.182	.234	.292	.159
51	.186	.175	.234	.280	.153
52	.182	.187	.217	.262	.150
53	.194	.182	.214	.260	.149
54	.197	.196	.204	.268	.136
55	.208	.201	.209	.257	.136
56	.205	.200	.204	.243	.139
57	.226	.195	.211	.232	.125
58	.231	.184	.200	.236	.128
59	.234	.196	.197	.235	.134
60	.231	.195	.205	.233	.130

Run No. 19; v component

K	Anemometer Position Number 1	2	3	4	5
00	1.000	1.000	1.000	1.000	1.000
01	.997,-1	.706,-1	.138	.101	.151
02	.878,-1	.491,-1	.10[illegible]	.647,-1	.694,-1
03	.674,-1	.400,-1	.475,-1	.256,-1	.566,-1
04	.733,-1	.236,-1	-.157,-1	-.196,-1	.144,-1
05	.137,-1	.268,-1	-.182,-1	.598,-2	-.602,-2
06	.280,-1	.[illegible]05,-2	-.424,-1	.102,-1	.504,-1
07	-.252,-1	-.122,-1	-.112,-1	-.578,-1	-.[illegible]95,-1
08	.260,-1	.538,-1	.101,-1	-.156,-1	.249,-1
09	-.284,-1	.856,-1	.256,-1	-.175,-1	.297,-1
10	-.604,-1	-.167,-1	.175,-2	.520,-1	.127,-1
11	-.302,-1	-.522,-1	.572,-2	.280,-1	.178,-1
12	-.200,-1	.107,-2	-.198,-1	.[illegible]2,-1	.517,-1
13	-.267,-1	-.522,-1	-.101,-1	.405,-1	.37[illegible],-1
14	-.190,-2	.811,-2	-.[illegible]3,-2	.2[illegible]0,-1	.070,-1
15	-.458,-2	.27[illegible],-1	-.[illegible]08,-1	.2[illegible]2,-1	.23[illegible],-1
16	-.146,-1	.581,-1	-.623,-2	-.145,-1	.102,-1
17	.110,-1	.547,-1	-.950,-1	-.47[illegible],-1	.19[illegible],-1
18	.575,-1	-.186,-1	.[illegible]20,-1	-.[illegible]44,-1	.145,-1
19	.219,-1	-.[illegible]28,-1	.[illegible]06,-2	-.[illegible]78,-1	-.[illegible]31,-2
20	.156,-1	-.150,-1	.106,-1	-.[illegible]00,-1	-.2[illegible]8,-1
21	.[illegible]29,-1	-.[illegible]41,-1	.[illegible]00,-1	-.[illegible]00,-1	.407,-1
22	.140,-1	-.522,-1	.[illegible]08,-1	-.[illegible]11,-1	-.[illegible]54,-2
23	-.741,-1	-.[illegible]02,-1	.[illegible]08,-2	.[illegible]82,-1	.179,-2
24	.215,-1	.121,-1	-.[illegible]33,-1	.[illegible]92,-1	.545,-1
25	.[illegible]18,-1	.[illegible]56,-1	-.[illegible]46,-1	.[illegible]32,-1	.272,-1
26	.417,-1	.257,-1	.124,-2	.120,-1	.150,-1
27	.757,-2	-.709,-1	-.[illegible]27,-1	-.[illegible]30,-1	.260,-1
28	-.[illegible]04,-2	-.[illegible]43,-1	.[illegible]52,-2	.[illegible]16,-1	-.[illegible]89,-2
29	.[illegible]35,-2	.[illegible]88,-2	-.[illegible]15,-1	.[illegible]00,-1	-.[illegible]57,-2
30	.111,-1	-.[illegible]22,-1	.[illegible]06,-1	-.[illegible]17,-1	-.[illegible]17,-1
31	-.[illegible]23,-1	-.[illegible]58,-1	.[illegible]03,-1	-.[illegible]39,-1	-.551,-2
32	.169,-1	.[illegible]52,-1	.206,-2	.[illegible]94,-2	.204,-1
33	.244,-1	.[illegible]88,-2	-.411,-2	.[illegible]21,-1	.147,-1
34	.[illegible]31,-2	.161,-1	-.127,-1	.[illegible]55,-1	-.[illegible]11,-2
35	.[illegible]58,-2	.[illegible]94,-1	-.[illegible]47,-1	.[illegible]75,-2	.[illegible]20,-1
36	.122,-1	-.541,-1	-.[illegible]18,-1	-.[illegible]30,-2	.1[illegible],-1
37	-.[illegible]50,-1	-.[illegible]23,-2	-.[illegible]06,-1	.[illegible]30,-1	-.[illegible]55,-1
38	-.117,-1	-.[illegible]40,-1	-.[illegible]27,-2	-.[illegible]70,-2	.[illegible]30,-1
39	-.157,-1	.[illegible]26,-1	-.176,-1	.11[illegible],-1	.[illegible]17,-2
40	.448,-1	-.[illegible]29,-1	.[illegible]59,-1	.[illegible]28,-2	.[illegible]56,-1
41	-.270,-2	.625,-1	.[illegible]09,-2	-.[illegible]46,-2	-.[illegible]95,-1
42	-.[illegible]55,-2	.[illegible]39,-1	-.[illegible]80,-2	-.[illegible]10[illegible],-1	-.[illegible]43,-1
43	.479,-2	.[illegible]81,-2	-.[illegible]36,-1	-.401,-1	-.[illegible]15,-1
44	.521,-1	-.244,-1	.[illegible]56,-2	-.[illegible]13,-1	.214,-1
45	.[illegible]13,-2	-.[illegible]84,-1	-.[illegible]39,-1	.[illegible]2[illegible],-1	.[illegible]70,-2
46	-.[illegible]00,-1	.[illegible]50,-2	-.411,-2	-.[illegible]72,-2	.[illegible]46,-1
47	.[illegible]91,-2	.[illegible]40,-1	.[illegible]15,-2	-.[illegible]41,-1	-.[illegible]11,-1
48	.420,-1	-.[illegible]72,-1	.[illegible]52,-2	.[illegible]12,-1	-.[illegible]05,-2
49	-.625,-1	.[illegible]70,-1	-.[illegible]03,-2	.[illegible]20[illegible],-1	.[illegible]16,-1
50	.[illegible]73,-1	.[illegible]75[illegible],-1	-.[illegible]67,-2	-.[illegible]20[illegible],-1	.[illegible]73,-2
51	.[illegible]70,-1	.[illegible]4[illegible],-1	.[illegible]72,-1	-.[illegible]78,-1	.[illegible]42,-1
52	.256,-1	-.[illegible]56,-1	.[illegible]55,-2	-.[illegible]03,-1	.[illegible]4[illegible],-1
53	.128,-1	-.[illegible]40[illegible],-1	-.[illegible]20[illegible],-1	-.[illegible]25,-1	.[illegible]75,-1
54	-.159,-1	-.[illegible]00,-1	-.[illegible]17[illegible],-1	.[illegible]20[illegible],-1	.[illegible]10,-1
55	-.[illegible]40,-1	-.[illegible]1[illegible],-2	-.[illegible]10,-1	.[illegible]60,-1	-.[illegible]05,-2
56	.[illegible]05,-1	-.[illegible]86,-2	-.[illegible]29,-1	.[illegible]27,-1	-.[illegible]24,-2
57	-.122,-1	-.[illegible]80,-1	.[illegible]66,-1	.[illegible]04,-1	.[illegible]31,-1
58	.151,-1	.136,-1	.[illegible]04,-1	-.[illegible]52,-2	.[illegible]20,-1
59	.[illegible]63,-2	.[illegible]38,-1	-.[illegible]05,-1	.[illegible]40,-1	.[illegible]30,-1
60	-.[illegible]98,-1	.[illegible]43,-2	.[illegible]24,-1	.[illegible]30,-1	.[illegible]71,-1

Run No. 21; u component

K	Anemometer Position Number 1	2	3	4	5
00	1.000	1.000	1.000	1.000	1.000
01	.817	.810	.795	.804	.795
02	.707	.696	.690	.696	.679
03	.634	.613	.597	.604	.585
04	.[illegible]	.565	.553	.562	.550
05	.571	.553	.548	.515	.511
06	.531	.520	.[illegible]08	.477	.492
07	.521	.[illegible]0	.479	.453	.486
08	.487	.475	.457	.434	.415
09	.[illegible]08	.[illegible]00	.[illegible]95	.413	.422
10	.470	.444	.417	.401	.395
11	.461	.450	.[illegible]05	.383	.389
12	.[illegible]05	.448	.[illegible]97	.393	.392
13	.471	.445	.[illegible]08	.[illegible]15	.[illegible]27
14	.477	.452	.[illegible]51	.[illegible]70	.[illegible]25
15	.477	.434	.[illegible]37	.[illegible]90	.[illegible]15
16	.[illegible]02	.[illegible]26	.[illegible]08	.[illegible]71	.[illegible]19
17	.[illegible]89	.[illegible]14	.[illegible]14	.[illegible]77	.[illegible]00
18	.473	.[illegible]07	.[illegible]73	.354	.[illegible]53
19	.[illegible]61	.[illegible]03	.[illegible]20	.[illegible]36	.[illegible]09
20	.[illegible]45	.[illegible]05	.[illegible]22	.[illegible]97	.[illegible]79
21	.[illegible]47	.[illegible]23	.[illegible]08	.[illegible]93	.[illegible]59
22	.[illegible]43	.[illegible]76	.[illegible]00	.[illegible]94	.244
23	.[illegible]78	.344	.[illegible]06	.307	.[illegible]30
24	.410	.332	.[illegible]25	.281	.225
25	.[illegible]01	.[illegible]32	.[illegible]78	.270	.243
26	.[illegible]04	.[illegible]31	.[illegible]46	.[illegible]57	.[illegible]39
27	.[illegible]05	.[illegible]02	.[illegible]25	.[illegible]57	.[illegible]19
28	.[illegible]76	.[illegible]17	.[illegible]42	.[illegible]56	.[illegible]25
29	.[illegible]77	.[illegible]05	.[illegible]15	.[illegible]57	.214
30	.[illegible]75	.[illegible]29	.[illegible]10	.[illegible]60	.[illegible]00
31	.[illegible]50	.[illegible]20	.[illegible]10	.[illegible]50	.[illegible]07
32	.[illegible]72	.[illegible]01	.[illegible]25	.[illegible]42	.214
33	.[illegible]10	.[illegible]07	.[illegible]02	.[illegible]60	.[illegible]02
34	.[illegible]56	.[illegible]29	.[illegible]20	.[illegible]45	.[illegible]00
35	.[illegible]01	.[illegible]74	.[illegible]23	.[illegible]39	.[illegible]30
36	.[illegible]77	.[illegible]75	.[illegible]03	.[illegible]30	.[illegible]40
37	.[illegible]74	.[illegible]00	.[illegible]12	.[illegible]00	.[illegible]94
38	.[illegible]73	.[illegible]01	.[illegible]29	.[illegible]43	.[illegible]58
39	.[illegible]06	.[illegible]94	.232	.[illegible]92	.[illegible]03
40	.[illegible]54	.[illegible]03	.214	.[illegible]59	.[illegible]70
41	.[illegible]34	.[illegible]57	.[illegible]30	.241	.[illegible]73
42	.[illegible]50	.[illegible]43	.[illegible]29	.[illegible]43	.[illegible]5[illegible]
43	.[illegible]03	.[illegible]44	.[illegible]27	.[illegible]53	.241
44	.[illegible]69	.[illegible]53	.[illegible]18	.[illegible]52	.229
45	.[illegible]13	.[illegible]21	.[illegible]00	.[illegible]20	.[illegible]40
46	.[illegible]77	.[illegible]09	.[illegible]18	.[illegible]73	.[illegible]15
47	.[illegible]05	.[illegible]12	.[illegible]01	.[illegible]72	.217
48	.[illegible]02	.[illegible]07	.[illegible]03	.[illegible]15	.[illegible]02
49	.[illegible]53	.[illegible]10	.[illegible]07	.[illegible]57	.[illegible]33
50	.[illegible]40	.[illegible]13	.[illegible]01	.[illegible]43	.[illegible]5[illegible]
51	.[illegible]24	.[illegible]15	.[illegible]78	.[illegible]04	.[illegible]67
52	.[illegible]15	.[illegible]73	.[illegible]73	.[illegible]13	.[illegible]42
53	.[illegible]24	.[illegible]15	.[illegible]84	.[illegible]06	.244
54	.[illegible]48	.[illegible]20	.[illegible]02	.213	.[illegible]51
55	.[illegible]40	.[illegible]82	.[illegible]97	.[illegible]02	.[illegible]37
56	.[illegible]23	.[illegible]15	.[illegible]09	.[illegible]02	.[illegible]32
57	.[illegible]57	.[illegible]01	.[illegible]17	.[illegible]19	.[illegible]55
58	.[illegible]38	.[illegible]54	.[illegible]10	.[illegible]35	.[illegible]48
59	.[illegible]49	.[illegible]00	.[illegible]95	.[illegible]32	.[illegible]43
60	.[illegible]36	.[illegible]05	.210	.231	.243

Run A 21; v component

	Anemometer Position Number				
K	1	2	3	4	5
00	1.000	1.000	1.000	1.000	1.000
01	.481	.437	.472	.457	.544
02	.374	.343	.351	.333	.361
03	.314	.288	.303	.[illegible]	.[illegible]
04	.[illegible]	.[illegible]	.[illegible]	.[illegible]	.[illegible]
05	.[illegible]	.[illegible]	.[illegible]	.[illegible]	.[illegible]
06	.[illegible]	.[illegible]	.240	.[illegible]	.[illegible]
07	.176	.[illegible]	.175	.[illegible]	.[illegible]
08	.171	.[illegible]	.177	.[illegible]	.[illegible]
09	.[illegible]	.[illegible]	.[illegible]	.[illegible]	.[illegible]
10	.170	.[illegible]	.[illegible]	.[illegible]	.[illegible]
11	.171	.[illegible]	.[illegible]	.[illegible]	.[illegible]
12	.142	.[illegible]	.[illegible]	.[illegible]	.[illegible]
13	.142	.151	.157	.[illegible]	.[illegible]
14	.137	.134	.134	.151	.[illegible]
15	.[illegible]	.[illegible]	.[illegible]	.[illegible]	.[illegible]
16	.155	.[illegible]	.[illegible]	.[illegible]	.[illegible]
17	.147	.157	.179	.[illegible]	.[illegible]
18	.[illegible]	.[illegible]	.[illegible]	.[illegible]	.[illegible]
19	.[illegible]	.[illegible]	.[illegible]	.[illegible]	.[illegible]
20	.[illegible]	.[illegible]	.[illegible]	.[illegible]	.[illegible]
21	.[illegible]	.[illegible]	.[illegible]	.[illegible]	.[illegible]
22	.[illegible]	.[illegible]	.[illegible]	.[illegible]	.[illegible]
23	.[illegible]	.[illegible]	.[illegible]	.[illegible]	.[illegible]
24	.[illegible]	.[illegible]	.[illegible]	.[illegible]	.[illegible]
25	.[illegible]	.[illegible]	.[illegible]	.[illegible]	.[illegible]
26	.[illegible]	.[illegible]	.[illegible]	.[illegible]	.[illegible]
27	.[illegible]	.[illegible]	.[illegible]	.[illegible]	.[illegible]
28	.[illegible]	.[illegible]	.[illegible]	.[illegible]	.[illegible]
29	.[illegible]	.[illegible]	.[illegible]	.[illegible]	.[illegible]
30	.[illegible]	.[illegible]	.[illegible]	.[illegible]	.[illegible]
31	.[illegible]	.[illegible]	.[illegible]	.[illegible]	.[illegible]
32	.[illegible]	.[illegible]	.[illegible]	.[illegible]	.[illegible]
33	.[illegible]	.[illegible]	.[illegible]	.[illegible]	.[illegible]
34	.[illegible]	.[illegible]	.[illegible]	.[illegible]	.[illegible]
35	.[illegible]	.[illegible]	.[illegible]	.[illegible]	.[illegible]
36	.[illegible]	.[illegible]	.[illegible]	.[illegible]	.[illegible]
37	.[illegible]	.[illegible]	.[illegible]	.[illegible]	.[illegible]
38	.[illegible]	.[illegible]	.[illegible]	.[illegible]	.[illegible]
39	.[illegible]	.[illegible]	.[illegible]	.[illegible]	.[illegible]
40	.[illegible]	.[illegible]	.[illegible]	.[illegible]	.[illegible]
41	.[illegible]	.[illegible]	.[illegible]	.[illegible]	.[illegible]
42	.[illegible]	.[illegible]	.[illegible]	.[illegible]	.[illegible]
43	.[illegible]	.[illegible]	.[illegible]	.[illegible]	.[illegible]
44	.[illegible]	.[illegible]	.[illegible]	.[illegible]	.[illegible]
45	.[illegible]	.[illegible]	.[illegible]	.[illegible]	.[illegible]
46	.[illegible]	.[illegible]	.[illegible]	.[illegible]	.[illegible]
47	.[illegible]	.[illegible]	.[illegible]	.[illegible]	.[illegible]
48	.[illegible]	.[illegible]	.[illegible]	.[illegible]	.[illegible]
49	.[illegible]	.[illegible]	.[illegible]	.[illegible]	.[illegible]
50	.[illegible]	.[illegible]	.[illegible]	.[illegible]	.[illegible]
51	.[illegible]	.[illegible]	.[illegible]	.[illegible]	.[illegible]
52	.[illegible]	.[illegible]	.[illegible]	.[illegible]	.[illegible]
53	.[illegible]	.[illegible]	.[illegible]	.[illegible]	.[illegible]
54	.[illegible]	.[illegible]	.[illegible]	.[illegible]	.[illegible]
55	.[illegible]	.[illegible]	.[illegible]	.[illegible]	.[illegible]
56	.[illegible]	.[illegible]	.[illegible]	.[illegible]	.[illegible]
57	.[illegible]	.[illegible]	.[illegible]	.[illegible]	.[illegible]
58	.[illegible]	.[illegible]	.[illegible]	.[illegible]	.[illegible]
59	.[illegible]	.[illegible]	.[illegible]	.[illegible]	.[illegible]
60	.[illegible]	.[illegible]	.[illegible]	.[illegible]	.[illegible]

Run No. 21; w component

K	Anemometer Position Number 1	2	3	4	5
00	1.000	1.000	1.000	1.000	1.000
01	.137,-1	.447,-1	.533,-1	.108	.401,-1
02	.55[illegible],-1	.7[illegible],-1	.[illegible]46,-1	.287,-1	-.107,-1
03	-.675,-2	-.777,-1	-.2[illegible]8,-1	-.10[illegible],-1	.233,-1
04	-.101,-1	.557,-1	-.372,-1	-.[illegible]53,-1	.417,-1
05	.480,-1	.170,-1	-.211,-1	-.178,-1	.447,-4
06	.2[illegible]4,-1	.[illegible]50,-1	.220,-1	-.2[illegible]0,-1	.[illegible]93,-1
07	.5[illegible],-1	.[illegible]85,-2	-.[illegible]92,-1	.197,-1	.[illegible]56,-1
08	-.[illegible]35,-1	.971,-2	.156,-1	-.21[illegible],-1	-.287,-1
09	.358,-1	-.777,-1	.644,-1	-.117,-1	.[illegible]90,-1
10	.[illegible]9,-2	.112,-2	-.210,-1	.117,-1	.405,-1
11	-.201,-1	-.[illegible]0,-1	-.[illegible]57,-5	-.1[illegible]4,-1	-.195,-1
12	-.115,-1	-.129,-1	.[illegible]68,-1	-.[illegible]48,-1	.220,-1
13	.2[illegible]5,-1	.[illegible]20,-1	-.[illegible]08,-1	.124, [illegible]	.229,-1
14	.511,-2	.747,-2	-.10[illegible],-1	.[illegible]02,-1	-.477,-1
15	-.112,-1	-.[illegible]35,-1	.[illegible]04,-2	-.[illegible]05,-2	.[illegible]53,-2
16	.477,-1	-.971,-1	-.[illegible]13,-2	-.[illegible]32,-2	.481,-1
17	-.[illegible]01,-1	.248,-1	.219,-1	.[illegible]22,-1	-.[illegible]45,-1
18	.[illegible]80,-1	.[illegible]54,-1	.[illegible]99,-1	.140,-1	-.[illegible]51,-2
19	.[illegible]40,-1	-.157,-1	.181,-2	.501,-1	.227,-1
20	.155,-1	-.[illegible]00,-1	.[illegible]43,-1	-.[illegible]58,-1	-.[illegible]15,-1
21	.[illegible]22,-2	.[illegible]59,-1	.[illegible]81,-2	-.[illegible]59,-1	-.[illegible]66,-1
22	.[illegible]90,-1	-.[illegible]30,-2	.151,-1	-.[illegible]70,-2	.[illegible]70,-1
23	-.[illegible]82,-1	.[illegible]59,-1	.[illegible]00,-1	-.[illegible]35,-1	-.[illegible]37,-1
24	.[illegible]79, 1	-.[illegible]70,-1	.[illegible]03,-1	-.[illegible]08,-1	-.145,-1
25	-.[illegible]59,-1	.[illegible]21,-1	-.[illegible]69,-1	.[illegible]83,-1	.[illegible]37,-1
26	.[illegible]44,-3	.[illegible]50,-2	-.[illegible]02,-2	-.[illegible]20,-1	.[illegible]98,-1
27	-.[illegible]43,-1	.[illegible]42,-1	-.[illegible]99,-2	.[illegible]22,-1	-.[illegible]48,-1
28	-.[illegible]70,-2	.[illegible]04,-3	.[illegible]47,-1	.[illegible]58,-1	.[illegible]52,-1
29	-.[illegible]07,-1	-.[illegible]09,-2	.[illegible]42,-2	-.[illegible]43,-2	-.[illegible]31,-1
30	-.[illegible]50,-1	.[illegible]05,-1	.[illegible]57,-1	-.[illegible]35,-2	-.111
31	.[illegible]07,-1	.[illegible]32,-1	.[illegible]04,-1	.[illegible]04,-1	.[illegible]35,-1
32	-.[illegible]00,-1	.[illegible]85,-1	-.[illegible]76,-2	.[illegible]94,-1	.[illegible]43,-2
33	-.[illegible]04,-1	-.[illegible]75,-1	.[illegible]14,-1	.[illegible]97,-1	-.[illegible]06,-1
34	-.[illegible]00,-2	-.[illegible]32,-1	-.[illegible]17,-1	-.[illegible]03,-1	-.[illegible]95,-1
35	.[illegible]05,-1	.[illegible]02,-1	-.[illegible]50,-2	.[illegible]97,-2	.[illegible]42,-1
36	.[illegible]30,-1	.[illegible]38,-1	.[illegible]09,-1	-.[illegible]50,-2	-.[illegible]40,-3
37	.[illegible]69,-1	.[illegible]47,-1	-.[illegible]98,-1	.[illegible]40,-1	-.[illegible]57,-1
38	.[illegible]01,-1	-.[illegible]60,-2	.[illegible]49,-1	.[illegible]04,-1	-.[illegible]89,-1
39	.[illegible]21,-1	.[illegible]52,-2	.112,-1	.207,-1	-.423,-1
40	.[illegible]83,-1	-.[illegible]79,-1	-.[illegible]48,-1	-.[illegible]03,-1	-.[illegible]20,-1
41	-.[illegible]28,-1	.[illegible]10,-1	.[illegible]95,-1	-.[illegible]27,-1	.[illegible]69,-1
42	.[illegible]02,-1	-.[illegible]01,-2	.[illegible]12,-2	-.[illegible]28,-1	-.[illegible]78,-2
43	-.[illegible]70,-1	.[illegible]95,-1	.[illegible]80,-2	.[illegible]75,-1	.[illegible]47,-2
44	.[illegible]85,-1	.[illegible]49,-2	.[illegible]50,-1	.[illegible]27,-1	.[illegible]56,-1
45	-.[illegible]01,-2	.[illegible]08,-2	-.[illegible]64,-1	.[illegible]82,-2	.[illegible]16,-1
46	-.[illegible]62,-1	-.[illegible]50,-1	-.[illegible]33,-1	.[illegible]56,-1	-.[illegible]55,-1
47	.[illegible]98,-1	-.[illegible]90,-2	.[illegible]08,-1	-.[illegible]41,-2	-.[illegible]90,-2
48	-.[illegible]81,-1	.[illegible]46,-1	.[illegible]52,-1	-.[illegible]89,-2	-.[illegible]90,-2
49	-.[illegible]95,-1	.[illegible]75,-1	-.[illegible]93,-1	-.[illegible]59,-1	-.[illegible]39,-1
50	-.[illegible]89,-1	-.[illegible]96,-1	.[illegible]08,-2	.[illegible]15,-1	.[illegible]04,-2
51	-.[illegible]60,-1	.[illegible]58,-1	-.[illegible]60,-1	.[illegible]10,-1	-.[illegible]83,-2
52	-.[illegible]59,-2	.[illegible]39,-1	-.[illegible]40,-2	.[illegible]22,-1	-.[illegible]68,-1
53	-.[illegible]16,-2	.[illegible]85,-1	.[illegible]99,-1	-.[illegible]07,-2	.[illegible]75,-2
54	.[illegible]06,-1	-.[illegible]90,-2	.[illegible]20,-1	.[illegible]46,-1	.[illegible]51,-1
55	.[illegible]75,-2	-.[illegible]09,-1	.[illegible]90,-1	.[illegible]08,-1	-.[illegible]00,-1
56	.[illegible]05,-2	.[illegible]91,-2	.[illegible]16,-1	-.[illegible]83,-1	-.[illegible]77,-1
57	.[illegible]85,-1	-.[illegible]17,-1	.[illegible]60,-1	.[illegible]94,-2	.[illegible]09,-1
58	.[illegible]33,-1	.[illegible]36,-2	-.[illegible]54,-1	-.[illegible]23,-1	.[illegible]05,-1
59	.[illegible]47,-1	-.[illegible]90,-2	-.[illegible]42,-2	.[illegible]19,-2	.[illegible]14,-1
60	-.[illegible]34,-1	-.[illegible]04,-2	.[illegible]28,-2	-.[illegible]59,-1	.[illegible]17,-1

Run No. 22; u component

K	Anemometer Position Number 1	2	3	4	5
00			1.000		
01			.699		
02			.569		
03			.491		
04			.448		
05			.396		
06			.351		
07			.323		
08			.285		
09			.263		
10			.248		
11			.226		
12			.206		
13			.224		
14			.196		
15			.174		
16			.164		
17			.163		
18			.175		
19			.145		
20			.149		
21			.141		
22			.128		
23			.108		
24			.106		
25			.942,-1		
26			.840,-1		
27			.833,-1		
28			.801,-1		
29			.730,-1		
30			.647,-1		
31			.408,-1		
32			.647,-2		
33			-.864,-1		
34			-.293,-1		
35			-.505,-1		
36			-.494,-1		
37			-.390,-1		
38			-.226,-1		
39			-.488,-1		
40			-.532,-1		
41			-.580,-1		
42			-.705,-1		
43			-.479,-1		
44			-.133,-1		
45			-.196,-1		
46			-.782,-2		
47			.647,-2		
48			.251,-1		
49			.339,-1		
50			.619,-1		
51			.310,-1		
52			.281,-1		
53			.201,-1		
54			-.130,-1		
55			-.380,-1		
56			-.381,-1		
57			-.506,-1		
58			-.365,-1		
59			-.371,-1		
60			-.596,-1		

Run No. 22; v component

K	Anemometer Position Number 1	2	3	4	5
00			1.000		
01			.363		
02			.835		
03			.177		
04			.630,-1		
05			.543,-1		
06			.835,-1		
07			.986,-1		
08			.189		
09			.119		
10			.716,-1		
11			.750,-1		
12			.650,-1		
13			.694,-1		
14			.904,-1		
15			.635,-1		
16			.998,-1		
17			.812,-1		
18			.883,-1		
19			.759,-1		
20			.305,-1		
21			.433,-1		
22			.117,-1		
23			.231,-1		
24			.370,-1		
25			.527,-2		
26			-.216,-2		
27			.339,-1		
28			.285,-2		
29			.210,-1		
30			-.191,-2		
31			.424,-1		
32			.499,-1		
33			.569,-1		
34			.287,-1		
35			.271,-1		
36			.147,-1		
37			.198,-1		
38			.142,-1		
39			.748,-1		
40			.550,-1		
41			.494,-1		
42			.567,-1		
43			.322,-1		
44			.609,-1		
45			.835,-1		
46			.730,-1		
47			.598,-1		
48			.784,-1		
49			.941,-2		
50			483,-1		
51			.643,-1		
52			.892,-1		
53			.597,-1		
54			.456,-1		
55			.160,-1		
56			.144,-1		
57			-.426,-2		
58			-.447,-2		
59			-.238,-1		
60			.327,-1		

Run No. 22; w component

K	Anemometer Position Number 1	2	3	4	5
00			1.000		
01			.409,-1		
02			.438,-1		
03			.909,-1		
04			.136,-1		
05			-.883,-1		
06			.114,-2		
07			-.194,-1		
08			.382,-1		
09			.900,-1		
10			-.178,-1		
11			.155,-2		
12			.145,-1		
13			-.380,-2		
14			-.327,-2		
15			.464,-1		
16			-.324,-1		
17			.149,-1		
18			.868,-1		
19			-.556,-1		
20			.339,-1		
21			.805,-1		
22			-.317,-1		
23			.646,-2		
24			-.187,-1		
25			-.675,-1		
26			.770,-2		
27			-.974,-2		
28			.394,-2		
29			.886,-1		
30			-.345,-1		
31			-.101,-1		
32			.544,-1		
33			-.832,-1		
34			-.409,-1		
35			.149,-1		
36			.522,-2		
37			-.324,-1		
38			.595,-1		
39			-.342,-1		
40			-.249,-1		
41			.550,-1		
42			-.150,-1		
43			-.170,-1		
44			-.967,-2		
45			-.319,-1		
46			.460,-1		
47			-.818,-2		
48			.107,-1		
49			.208,-1		
50			.166,-1		
51			-.568,-1		
52			-.285,-1		
53			.121,-1		
54			-.745,-3		
55			.863,-2		
56			-.182,-1		
57			-.157,-1		
58			.255,-1		
59			-.464,-1		
60			-.828,-1		

Run No. 23; u component

	Anemometer Position Number				
K	1	2	3	4	5
00	1.000	1.000	1.000	1.000	1.000
01	.748	.714	.718	.775	.699
02	.605	.557	.569	.632	.522
03	.524	.479	.499	.531	.404
04	.445	.429	.457	.478	.339
05	.398	.424	.421	.427	.278
06	.376	.393	.384	.378	.265
07	.362	.367	.358	.342	.248
08	.314	.306	.327	.305	.246
09	.281	.279	.283	.255	.222
10	.261	.279	.267	.230	.167
11	.231	.303	.256	.205	.142
12	.231	.308	.251	.170	.146
13	.228	.279	.263	.136	.144
14	.232	.269	.239	.126	.133
15	.231	.255	.197	.122	.113
16	.227	.247	.176	.106	.125
17	.233	.233	.184	.943,-1	.101
18	.230	.222	.180	.952,-1	.903,-1
19	.240	.207	.157	.105	.889,-1
20	.258	.174	.142	.102	.941,-1
21	.257	.174	.126	.109	.922,-1
22	.262	.155	.105	.112	.915,-1
23	.238	.145	.770,-1	.110	.850,-1
24	.202	.142	.962,-1	.995,-1	.686,-1
25	.185	.125	.927,-1	.890,-1	.641,-1
26	.179	.137	.929,-1	.835,-1	.590,-1
27	.179	.131	.804,-1	.833,-1	-.954,-2
28	.175	.131	.768,-1	.821,-1	.194,-1
29	.160	.150	.670,-1	.531,-1	.412,-1
30	.137	.156	.467,-1	.737,-1	.365,-1
31	.114	.148	.825,-1	.904,-1	.654,-1
32	.108	.150	.815,-1	.947,-1	.810,-1
33	.817,-1	.151	.574,-1	.986,-1	.531,-1
34	.669,-1	.131	.522,-1	.957,-1	.393,-1
35	.630,-1	.934,-1	.563,-1	.895,-1	.300,-1
36	.440,-1	.709,-1	.696,-1	.823,-1	.230,-1
37	.325,-1	.553,-1	.825,-1	.880,-1	.285,-1
38	.295,-1	.498,-1	.118	.919,-1	.409,-1
39	.427,-1	.429,-1	.116	.971,-1	.494,-1
40	.298,-1	.412,-1	.100	.679,-1	.778,-1
41	.237,-1	.500,-1	.765,-1	.627,-1	.865,-1
42	.405,-1	.564,-1	.632,-1	.468,-1	.797,-1
43	.461,-1	.843,-1	.541,-1	.389,-1	.857,-1
44	.324,-1	.909,-1	.529,-1	.517,-1	.876,-1
45	.231,-1	.102	.647,-1	.555,-1	.857,-1
46	.159,-1	.860,-1	.380,-1	.493,-1	.579,-1
47	-.282,-2	.895,-1	.155,-2	.458,-1	.411,-1
48	-.513,-2	.602,-1	.420,-2	.682,-1	.879,-1
49	-.170,-1	.645,-1	.877,-3	.780,-1	.587,-1
50	-.252,-1	.618,-1	-.588,-3	.995,-1	.497,-1
51	-.183,-1	.664,-1	-.291,-3	.104	.712,-1
52	-.215,-1	.654,-1	-.184,-1	.107	.718,-1
53	-.365,-1	.560,-1	-.110,-1	.111	.449,-1
54	-.376,-1	.212,-1	-.164,-1	.114	.437,-1
55	-.397,-1	-.350,-2	-.855,-1	.968,-1	.444,-1
56	-.756,-1	-.121,-2	-.128,-1	.976,-1	.325,-1
57	-.646,-1	.194,-2	.758,-2	.900,-1	.252,-1
58	-.728,-1	-.868,-2	.247,-1	.868,-1	.486,-2
59	-.893,-1	-.220,-1	.216,-1	.769,-1	-.478,-2
60	-.101	-.231,-1	.310,-1	.847,-1	.185,-1

Run No. 23; v component

	Anemometer position number				
K	1	2	3	4	5
00	1.000	1.000	1.000	1.000	1.000
01	.407	.350	.433	.488	.370
02	.328	.248	.253	.362	.259
03	.305	.226	.195	.255	.213
04	.204	.182	.205	.182	.149
05	.164	.152	.139	.169	.129
06	.217	.106	.120	.139	.128
07	.167	.131	.723,-1	.123	.113
08	.127	.990,-1	.870,-1	.116	.715,-1
09	.105	.100	.137	.111	.116
10	.115	.119	.104	.829,-1	.981,-1
11	.757,-1	.402,-1	.818,-1	.774,-1	.787,-1
12	.782,-1	.275,-1	.640,-1	.794,-1	.480,-1
13	.825,-1	.427,-1	.965,-1	.110	.269,-1
14	.613,-1	.294,-1	.124	.932,-1	.444,-1
15	.604,-1	.443,-1	.101	.130	.372,-1
16	.378,-1	.161,-1	.815,-1	.108	.206,-1
17	.386,-3	.406,-1	.865,-1	.974,-1	.322,-1
18	-.191,-2	.191,-1	.133	.905,-1	.443,-1
19	-.295,-2	.292,-1	.110	.463,-1	.346,-1
20	.798,-2	.182,-1	.498,-1	.898,-1	.802,-2
21	.149,-1	-.335,-1	.305,-1	.810,-1	.330,-1
22	-.652,-1	.402,-2	.470,-1	.988,-1	.309,-1
23	-.580,-1	-.151,-1	.980,-1	.978,-1	.404,-1
24	-.263,-1	.139,-2	.860,-1	.914,-1	.691,-1
25	-.613,-1	-.609,-2	.815,-1	.696,-1	.256,-1
26	-.689,-1	-.150,-1	.405,-1	.546,-1	.361,-1
27	-.150,-1	.489,-1	.865,-1	.905,-1	.170,-1
28	-.259,-1	.375,-1	.778,-1	.550,-1	.465,-1
29	-.310,-1	.484,-1	.280,-1	.242,-1	.389,-1
30	.564,-2	.395,-1	.423,-1	.116,-1	.374,-1
31	-.933,-2	.412,-1	.995,-1	.222,-2	.487,-1
32	-.154,-2	.20[illegible],-1	.104	.405,-1	.369,-1
33	-.109,-1	.230,-1	.875,-1	.119,-1	.600,-1
34	.665,-2	.689,-1	.558,-1	.337,-1	.383,-1
35	-.450,-2	.344,-1	.550,-1	.895,-1	.578,-1
36	-.225,-1	.427,-1	.410,-1	.536,-1	.112
37	-.279,-1	.298,-1	.575,-1	.463,-1	.922,-1
38	-.629,-3	.789,-1	.185,-1	.566,-1	.970,-1
39	.126,-1	.329,-1	.568,-2	.553,-1	.446,-1
40	.279,-1	-.116,-1	.415,-1	.666,-1	.350,-1
41	.205,-1	.225,-1	.620,-1	.376,-1	.439,-2
42	.550,-1	.342,-1	.580,-1	.199,-1	.398,-1
43	.449,-1	.217,-1	.159,-1	-.118,-1	.215,-1
44	.459,-1	.112,-1	.693,-1	.841,-2	.202,-1
45	.732,-1	.250,-1	.908,-1	.205,-2	.365,-1
46	.751,-1	.586,-2	.980,-1	-.137,-1	.776,-1
47	.829,-1	.478,-1	.876,-1	.622,-2	.598,-1
48	.614,-1	.406,-1	.458,-1	-.112,-1	.776,-1
49	.935,-1	.590,-1	.335,-1	.847,-2	.101
50	.101	.453,-1	.290,-1	.769,-2	.376,-1
51	.600,-1	.542,-1	.498,-1	.153,-1	.180,-1
52	.998,-1	.377,-1	.608,-1	.457,-1	.118,-1
53	.315,-1	.207,-1	.920,-1	.399,-1	-.702,-2
54	.158,-1	.938,-1	.510,-1	.598,-1	.350,-1
55	.727,-1	.888,-1	.920,-1	.673,-1	.280,-1
56	.989,-1	.509,-1	.785,-1	.108,-1	-.187,-1
57	.382,-1	.414,-1	.715,-1	.177,-1	.624,-2
58	.975,-1	.542,-1	.863,-1	.656,-2	.459,-1
59	.112	.617,-1	.121	.111,-1	.182,-1
60	.141	.226,-1	.109	-.944,-2	-.361,-2

Run No. 23; w component

	Anemometer Position Number				
K	1	2	3	4	5
00	1.000	1.000	1.000	1.000	1.000
01	.144	.245,-1	.133	.539,-1	.709,-1
02	.341,-1	.525,-1	.607,-1	.414,-1	.346,-1
03	.240,-1	.253,-1	.420,-1	.213,-1	.286,-1
04	.345,-1	.440,-2	.376,-3	-.175,-1	.102,-1
05	.291,-1	.658,-1	.171,-1	-.321,-1	-.189,-1
06	-.261,-2	.566,-1	-.120,-1	.330,-1	.151,-1
07	.607,-2	-.222,-1	-.407,-1	-.389,-1	.163,-3
08	-.382,-1	-.137,-1	-.162,-1	.258,-1	-.180,-2
09	-.530,-2	.106,-1	-.597,-2	.316,-1	-.506,-2
10	.870,-2	-.685,-1	-.337,-1	.939,-2	.197,-1
11	-.281,-1	.311,-1	-.171,-1	.434,-2	.477,-1
12	-.493,-1	.176,-1	-.223,-1	.890,-2	-.266,-1
13	-.307,-1	.904,-2	-.111,-2	.226,-1	-.213,-2
14	.830,-2	-.163,-1	.431,-1	-.201,-1	-.705,-3
15	-.150,-1	-.466,-1	.109,-1	-.396,-1	.370,-2
16	-.741,-2	-.232,-1	.405,-1	.899,-2	.159,-1
17	.411,-2	-.310,-1	.871,-1	-.185,-2	.542,-2
18	-.247,-1	-.193,-1	.928,-1	.089,-1	.201,-1
19	-.107,-1	.466,-1	-.101,-1	-.522,-2	.147,-1
20	.411,-1	-.475,-1	-.315,-1	.270,-2	-.617,-1
21	.781,-1	.373,-1	-.321,-1	-.186,-1	-.118,-1
22	.407,-1	-.726,-1	-.455,-1	-.557,-1	-.288,-1
23	.328,-1	-.389,-1	.463,-1	.354,-1	-.771,-1
24	.415,-1	-.232,-1	.706,-2	-.908,-2	-.299,-1
25	.481,-1	-.207,-1	.805,-2	-.272,-1	.817,-2
26	-.117,-1	.210,-1	.264,-2	-.131,-2	-.375,-1
27	.556,-1	.489,-2	.468,-1	-.110,-1	.194,-1
28	.256,-1	-.269,-1	.309,-1	-.504,-2	-.170,-2
29	-.293,-1	-.847,-1	.117,-1	-.557,-1	-.102,-1
30	-.198,-1	-.148,-1	-.350,-1	-.132,-1	-.269,-1
31	-.184,-1	-.402,-1	.592,-1	-.675,-2	-.274,-2
32	-.314,-1	-.304,-1	.553,-1	.205,-1	.600,-2
33	.804,-2	-.151,-1	-.917,-2	.765,-2	-.137,-1
34	.130,-1	-.184,-1	-.200,-1	-.276,-1	-.349,-1
35	.116,-1	.445,-1	-.167,-1	.185,-1	-.146,-2
36	-.604,-2	.155,-1	-.847,-1	-.191,-2	-.129,-1
37	-.114	-.170,-1	-.825,-1	.625,-2	.257,-2
38	-.366,-1	.838,-1	.185,-1	-.124,-1	-.471,-1
39	.186,-1	-.858,-4	-.307,-1	-.482,-1	.430,-1
40	.522,-3	-.941,-2	.102,-1	.509,-2	.293,-1
41	-.593,-1	.479,-2	.473,-2	.212,-1	-.248,-1
42	-.689,-1	.317,-1	-.186,-1	-.715,-1	.606,-3
43	-.833,-1	-.534,-1	-.495,-1	-.266,-2	.691,-2
44	-.186,-1	-.228,-2	-.850,-2	.247,-1	.365,-1
45	-.148,-1	.179,-1	-.211,-1	-.319,-1	.399,-1
46	.232,-2	.653,-2	.169,-1	.832,-2	-.304,-1
47	.285,-1	.413,-1	.158,-1	-.557,-1	.157,-1
48	.254,-1	.111,-1	.441,-1	.198,-1	-.375,-1
49	.207,-1	-.139,-1	.143,-1	.298,-1	-.237,-1
50	.189,-1	-.389,-1	.490,-1	.128,-2	.127,-1
51	-.355,-2	-.470,-1	.114,-1	.539,-2	.330,-1
52	-.351,-1	.229,-1	.966,-2	-.337,-2	.210,-1
53	-.669,-2	.134,-1	-.469,-1	.104,-1	.149,-1
54	.187,-1	.357,-1	.408,-1	.522,-1	-.176,-1
55	.848,-1	.904,-2	.656,-1	-.119,-1	-.594,-1
56	-.222,-1	.148,-1	.651,-1	.585,-2	.281,-1
57	-.641,-2	.667,-2	.249,-1	-.429,-2	-.123,-1
58	-.726,-1	.163,-1	-.147,-1	-.415,-1	.186,-1
59	-.182,-1	-.326,-1	.322,-1	.939,-2	-.299,-1
60	-.154,-1	-.175,-1	-.212,-1	.482,-1	-.771,-2

Run No. 24; u component

K	Anemometer Position Number 1	2	3	4	5
00	1.000	1.000	1.000	1.000	1.000
01	.608	.713	.739	.789	.678
02	.521	.510	.581	.641	.504
03	.412	.392	.487	.560	.422
04	.358	.298	.425	.493	.358
05	.295	.241	.349	.417	.308
06	.259	.238	.299	.375	.278
07	.200	.210	.245	.326	.243
08	.155	.165	.185	.294	.199
09	.115	.123	.163	.275	.174
10	.600,-1	.937,-1	.151	.257	.121
11	.436,-1	.740,-1	.151	.257	.979,-1
12	.365,-1	.857,-1	.135	.241	.850,-1
13	.322,-1	.910,-1	.126	.225	.471,-1
14	.354,-1	.919,-1	.896,-1	.218	.431,-1
15	.401,-1	.694,-1	.805,-1	.192	.178,-1
16	.150,-1	.256,-1	.727,-1	.161	.699,-2
17	-.756,-2	.910,-2	.491,-1	.133	-.141,-1
18	-.580,-1	-.198,-2	.428,-1	.995,-1	-.131,-1
19	-.509,-1	.339,-2	.601,-1	.813,-1	-.258,-1
20	-.851,-1	.773,-2	.626,-1	.574,-1	-.188,-1
21	-.110	.599,-2	.522,-1	.439,-1	.356,-2
22	-.950,-1	-.102,-1	.345,-1	.329,-1	-.979,-2
23	-.108	-.460,-1	.248,-1	.265,-1	-.460,-1
24	-.804,-1	-.774,-1	.668,-1	.143,-1	-.648,-1
25	-.942,-1	-.937,-1	.610,-1	.727,-2	-.598,-1
26	-.102	-.107	.589,-1	.174,-2	-.600,-1
27	-.125	-.121	.389,-1	-.394,-2	-.350,-1
28	-.119	-.147	.239,-1	-.180,-1	-.286,-1
29	-.125	-.162	.335,-1	-.351,-1	-.108,-1
30	-.106	-.171	.291,-1	-.475,-1	.326,-2
31	-.100	-.166	.474,-1	-.517,-1	.549,-2
32	-.942,-1	-.132	.277,-1	-.493,-1	-.145,-1
33	-.664,-1	-.928,-1	.459,-1	-.560,-1	-.822,-1
34	-.512,-1	-.823,-1	.532,-1	-.665,-1	.240,-1
35	-.323,-1	-.786,-1	.651,-1	-.727,-1	.255,-1
36	-.293,-1	-.659,-1	.546,-1	-.842,-1	.265,-1
37	-.160,-1	-.634,-1	.485,-1	-.958,-1	-.111,-2
38	-.201,-1	-.439,-1	.320,-1	-.727,-1	-.155,-1
39	-.392,-1	-.255,-1	.646,-2	-.823,-1	-.203,-1
40	-.358,-1	-.147,-1	-.672,-2	-.703,-1	-.200,-1
41	-.180,-1	-.141,-1	-.181,-1	-.617,-1	-.727,-3
42	.527,-2	.640,-2	-.345,-1	-.632,-1	.131,-1
43	.116,-1	.158,-1	-.472,-1	-.703,-1	.250,-1
44	.140,-1	.968,-1	-.369,-1	-.718,-1	.194,-1
45	.942,-3	.326,-1	-.602,-1	-.732,-1	.207,-1
46	.605,-2	.382,-1	-.836,-1	-.780,-1	.199,-1
47	.334,-2	.216,-1	-.795,-1	-.651,-1	.153,-1
48	.379,-2	.185,-1	-.746,-1	-.684,-1	.900,-2
49	.267,-2	.292,-2	-.110	-.722,-1	.117,-1
50	-.445,-1	.353,-3	-.115	-.512,-1	.471,-1
51	-.726,-1	.909,-1	-.119	-.541,-1	.414,-1
52	-.599,-1	.352,-1	-.119	-.522,-1	.825,-1
53	-.407,-1	.202,-1	-.121	-.608,-1	.923,-1
54	-.235,-1	-.173,-2	-.106	-.746,-1	.720,-1
55	-.374,-1	-.271,-1	-.105	-.847,-1	.661,-1
56	-.339,-1	-.384,-1	-.103	-.933,-1	.727,-1
57	-.229,-1	-.461,-1	-.111	-.856,-1	.734,-1
58	-.173,-1	-.333,-1	-.137	-.761,-1	.748,-1
59	-.149,-1	-.212,-1	-.120	-.813,-1	.391,-1
60	-.103,-1	-.187,-1	-.117	-.833,-1	-.192,-1

Run No. 24; v component

K	Anemometer Position Number 1	2	3	4	5
00	1.000	1.000	1.000	1.000	1.000
01	.386	.401	.501	.462	.408
02	.243	.308	.367	.290	.217
03	.216	.229	.300	.187	.189
04	.122	.162	.189	.161	.137
05	.109	.134	.153	.155	.126
06	.114	.134	.165	.808,-1	.898,-1
07	.120	.150	.126	.273,-1	.672,-1
08	.927,-1	.155	.123	-.236,-1	.744,-1
09	.130	.113	.123	-.347,-1	.781,-1
10	.495,-1	.925,-1	.113	-.149,-1	.704,-1
11	.797,-1	.842,-1	.112	-.300,-1	.719,-1
12	.681,-1	.968,-1	.110	.748,-2	.450,-1
13	.388,-1	.476,-1	.106	.394,-1	.771,-1
14	.509,-1	.784,-1	.804,-.	.400,-1	-.102,-1
15	.329,-1	.620,-1	.508,-1	.040,-1	-.166,-1
16	.373,-1	.455,-1	.152,-1	.360,-1	.139,-2
17	.444,-1	.563,-1	.155,-1	.594,-2	-.990,-2
18	.845,-1	.511,-1	-.284,-1	-.297,-2	-.550,-2
19	.526,-1	.111,-1	-.473,-1	-.155,-2	.210,-1
20	.943,-1	-.455,-2	-.363,-1	-.863,-2	.198,-2
21	.633,-1	.134,-1	-.240,-1	-.342,-1	.972,-2
22	.376,-1	.451,-1	-.303,-1	-.496,-1	-.425,-1
23	.663,-1	.297,-1	-.307,-1	-.712,-1	-.279,-1
24	.650,-1	.360,-3	-.275,-1	-.797,-1	-.121,-1
25	-.736,-2	.243,-1	-.303,-1	-.397,-1	-.235,-1
26	-.243,-1	.260,-2	.409,-3	-.277,-1	.244,-1
27	.161,-2	.224,-2	-.651,-2	-.358,-2	.510,-2
28	-.195,-2	.138,-1	.704,-2	-.270,-1	.146,-1
29	-.150,-1	-.936,-2	.940,-2	-.115,-1	-.881,-2
30	-.574,-2	-.209,-1	-.133,-1	.340,-1	.229,-1
31	-.174,-1	-.276,-1	-.335,-1	.356,-1	.483,-1
32	-.562,-2	-.129,-1	-.209,-1	.326,-1	-.236,-1
33	-.176,-1	-.659,-3	-.353,-1	.112,-1	-.863,-2
34	-.512,-1	-.341,-2	-.359,-1	.640,-2	-.591,-1
35	.119,-1	-.852,-2	-.879,-2	.580,-1	-.182,-1
36	-.304,-1	-.231,-1	.195,-1	.478,-1	-.300,-1
37	-.451,-1	-.274,-2	.335,-1	.615,-1	-.276,-1
38	.247,-1	.109,-1	.402,-1	.522,-1	-.194,-2
39	.126,-2	.130,-2	.312,-1	.110,-1	.120,-1
40	.205,-1	.186,-1	.181,-1	.396,-1	.692,-2
41	.195,-1	.634,-1	.139,-1	.453,-1	-.187,-2
42	.404,-1	.572,-1	.215,-2	.153,-1	-.371,-1
43	.857,-2	.150,-1	.650,-1	.254,-2	-.746,-1
44	-.289,-1	.110,-1	.559,-1	-.385,-1	-.505,-1
45	-.423,-1	-.655,-1	.303,-2	-.288,-1	-.595,-1
46	-.308,-1	-.713,-1	.173,-1	-.545,-1	-.381,-1
47	-.559,-1	-.393,-1	.210,-1	-.599,-1	-.242,-1
48	-.361,-1	-.468,-1	-.741,-2	-.475,-1	-.503,-1
49	-.108,-1	-.362,-1	-.273,-1	-.108,-1	-.270,-1
50	-.694,-1	-.505,-1	-.178,-1	-.451,-1	-.689,-1
51	-.419,-1	-.508,-1	.404,-2	.219,-1	-.405,-1
52	.005,-2	-.944,-1	.152,-1	-.401,-1	-.391,-1
53	-.428,-1	-.670,-1	.114,-1	-.131, 1	-.366,-1
54	-.424,-1	-.489,-1	.284,-1	-.101,-1	-.510,-1
55	-.673,-1	-.695,-1	.212,-1	-.347,-1	-.515,-1
56	-.748,-1	-.245,-1	.240,-1	-.703,-2	-.215,-1
57	-.860,-1	-.840,-1	.767,-3	.112,-1	-.331,-1
58	-.550,-1	-.600,-1	-.245,-1	-.255,-1	-.341,-1
59	-.337,-.	-.309,-1	-.527,-1	-.342,-1	-.241,-1
60	-.489,-1	-.55?,-1	-.815,-1	-.250,-1	-.536,-1

Run No. 24; w component

	Anemometer Position Number				
K	1	2	3	4	5
00	1.000	1.000	1.000	1.000	1.000
01	.380,-1	.448,-1	.115	.215,-1	.139
02	.110,-1	.240,-1	.209,-1	.275,-1	-.100,-2
03	.885,-1	-.517,-2	.328,-1	.69 ,-1	.211,-1
04	-.305,-1	.188,-1	.317,-1	.11 ,-1	.291,-1
05	.245,-1	.190,-1	.214,-1	-.415,-1	.567,-1
06	.275,-1	.704,-1	.454,-1	-.104,-1	.302,-1
07	-.335,-1	-.395,-1	-.116,-2	.995,-1	-.514,-1
08	-.677,-2	-.147,-1	-.337,-1	-.32 ,-1	.945,-1
09	.145,-1	-.452,-1	.371,-1	.100,-2	.350,-1
10	-.240,-1	.410,-1	-.133,-1	-.268,-1	.991,-1
11	-.105,-1	.935,-2	-.181,-2	.204,-1	-.191,-1
12	-.429,-1	.154,-1	-.841,-2	-.934,-1	-.640,-1
13	-.142,-1	-.205,-1	-.108,-2	.690,-1	-.155,-1
14	-.590,-1	.103	-.287,-1	.370,-1	-.150,-1
15	-.246,-1	.356,-1	-.158,-2	.990,-1	-.290,-1
16	-.669,-2	.111,-2	-.142,-1	-.5 ,-1	-.805,-1
17	-.778,-1	-.154,-1	-.150,-1	-.583,-1	-.216,-1
18	-.517,-1	-.848,-2	.944,-2	.211,-1	-.420,-1
19	-.904,-3	.401,-2	.831,-2	-.81 ,-2	-.998,-1
20	-.268,-1	.990,-1	-.246,-2	-.317,-1	-.405,-1
21	-.159,-1	-.104,-1	-.107,-1	-.199,-1	.976,-1
22	.244,-1	.957,-2	.958,-1	.459,-1	-.790,-1
23	-.333,-2	-.312,-1	-.031,-1	.213,-1	.575,-2
24	-.732,-2	-.807,-2	.113,-1	.990,-1	-.138,-1
25	.759,-1	.498,-1	-.117,-1	.904,-2	.578,-2
26	-.330,-1	.255,-1	-.419,-1	.309,-1	-.184,-1
27	.286,-1	.132,-2	.305,-2	.929,-1	-.601,-1
28	.866,-2	-.160,-1	-.379,-4	-.998,-1	-.529,-1
29	-.159,-1	-.587,-2	-.102,-1	.119,-1	-.325,-1
30	.425,-1	.165,-2	-.147,-1	-.546,-1	-.495,-1
31	.452,-2	.340,-1	-.662,-1	.148,-2	-.488,-1
32	.351,-1	.199,-1	-.208,-1	.941,-2	-.502,-1
33	.114,-1	.120,-1	.333,-1	-.314,-1	-.642,-1
34	.266,-1	-.249,-1	-.349,-1	.248,-1	-.390,-1
35	.632,-3	-.405,-1	.504,-3	.956,-1	-.964,-1
36	.320,-1	.281,-2	-.149,-1	.488,-1	-.187,-1
37	-.222,-2	.509,-1	-.497,-2	.319,-1	.994,-1
38	.287,-1	-.165,-1	.790,-1	.323,-1	-.151,-1
39	-.402,-1	.944,-1	.403,-1	.277,-1	-.103,-1
40	-.448,-1	-.114,-1	.173,-1	.029,-1	.984,-1
41	-.329,-1	.591,-1	-.171,-1	.355,-1	-.106,-1
42	-.214,-1	.146,-1	-.119,-1	-.377,-1	.353,-1
43	.201,-1	-.420,-2	-.469,-2	-.143,-1	.443,-1
44	-.155,-1	.220,-1	.260,-1	.984,-1	.113,-1
45	-.300,-2	-.343,-2	-.210,-1	.789,-2	.347,-1
46	.251,-1	-.207,-1	-.343,-1	-.122,-1	.395,-1
47	.276,-1	.263,-1	-.344,-2	-.129,-1	-.184,-1
48	.269,-1	-.135,-1	.284,-1	-.852,-2	-.696,-2
49	-.141,-1	-.213,-1	-.378,-1	-.250,-1	.182,-1
50	-.367,-1	.278,-1	-.277,-1	-.989,-2	.314,-1
51	-.236,-3	.617,-1	-.112,-1	.503,-1	.117,-1
52	-.640,-2	-.265,-1	.429,-1	.174,-1	-.479,-1
53	-.261,-1	-.219,-1	.442,-1	-.179,-2	-.158,-1
54	.150,-1	-.172,-1	.944,-2	.649,-2	.260,-1
55	-.494,-1	-.157,-1	.826,-2	-.403,-1	.543,-2
56	.196,-1	.326,-1	-.411,-1	-.407,-1	-.218,-1
57	.483,-1	.826,-2	-.142,-1	-.234,-1	.224,-1
58	.236,-1	-.333,-1	-.836,-2	-.686,-2	-.245,-1
59	.785,-2	.661,-1	.475,-1	-.110,-1	-.318,-1
60	-.272,-1	-.252,-1	-.299,-1	.298,-1	-.109,-1

Run No. 26; u component

	Anemometer Position Number				
K	1	2	3	4	5
00			1.000	1.000	
01			.854	.867	
02			.744	.771	
03			.700	.727	
04			.659	.694	
05			.630	.668	
06			.597	.661	
07			.569	.631	
08			.540	.616	
09			.517	.601	
10			.495	.594	
11			.472	.572	
12			.464	.557	
13			.456	.551	
14			.437	.513	
15			.423	.498	
16			.411	.491	
17			.411	.483	
18			.407	.472	
19			.403	.450	
20			.403	.452	
21			.401	.413	
22			.394	.399	
23			.390	.387	
24			.382	.387	
25			.369	.384	
26			.355	.373	
27			.353	.357	
28			.346	.338	
29			.328	.334	
30			.322	.320	
31			.322	.314	
32			.315	.323	
33			.307	.321	
34			.297	.318	
35			.286	.321	
36			.275	.315	
37			.274	.306	
38			.270	.293	
39			.264	.289	
40			.272	.283	
41			.265	.284	
42			.275	.273	
43			.287	.276	
44			.285	.286	
45			.291	.284	
46			.292	.279	
47			.311	.277	
48			.301	.282	
49			.297	.307	
50			.293	.323	
51			.277	.322	
52			.275	.318	
53			.262	.316	
54			.245	.311	
55			.242	.314	
56			.241	.316	
57			.241	.307	
58			.227	.295	
59			.225	.289	
60			.227	.290	

Run No. 26; v component

K	Anemometer Position Number 1	2	3	4	5
00			1.000	1.000	
01			.828	.849	
02			.761	.781	
03			.728	.741	
04			.694	.711	
05			.585	.687	
06			.644	.669	
07			.633	.639	
08			.622	.627	
09			.617	.614	
10			.589	.602	
11			.583	.600	
12			.567	.587	
13			.542	.572	
14			.526	.554	
15			.518	.554	
16			.504	.547	
17			.501	.528	
18			.482	.527	
19			.476	.520	
20			.460	.512	
21			.464	.504	
22			.455	.497	
23			.447	.489	
24			.440	.477	
25			.418	.478	
26			.412	.455	
27			.409	.457	
28			.389	.436	
29			.394	.452	
30			.392	.418	
31			.372	.407	
32			.365	.384	
33			.369	.396	
34			.360	.397	
35			.367	.401	
36			.367	.398	
37			.361	.399	
38			.368	.404	
39			.363	.399	
40			.358	.389	
41			.356	.384	
42			.355	.379	
43			.363	.378	
44			.347	.363	
45			.331	.359	
46			.332	.357	
47			.340	.342	
48			.338	.334	
49			.335	.332	
50			.334	.329	
51			.342	.330	
52			.329	.327	
53			.335	.320	
54			.326	.325	
55			.313	.320	
56			.312	.306	
57			.305	.302	
58			.305	.307	
59			.301	.288	
60			.287	.279	

Run No. 25; w component

K	Anemometer Position Number 1	2	3	4	5
00			1.000	1.000	
01			.120	.108	
02			.455,-1	.994,-1	
03			.887,-1	.275,-1	
04			-.721,-1	.332,-1	
05			-.824,-2	-.501,-2	
06			.241,-1	-.175,-1	
07			-.514,-1	.546,-1	
08			-.275,-1	-.266,-1	
09			.226,-2	.197,-1	
10			-.228,-1	.232,-1	
11			.617,-2	-.251,-2	
12			.563,-2	.125,-2	
13			.136,-1	-.377,-2	
14			-.484,-1	.543,-1	
15			-.255,-1	-.429,-1	
16			-.237,-1	-.656,-2	
17			-.260,-1	-.204,-1	
18			.146,-1	-.121,-1	
19			-.169,-1	-.250,-1	
20			-.563,-1	.120,-1	
21			-.184,-1	-.424,-2	
22			-.518,-2	-.215,-1	
23			-.387,-1	-.752,-2	
24			-.176,-2	-.129,-1	
25			-.572,-2	-.127,-1	
26			-.450,-1	-.540,-1	
27			-.422,-1	-.357,-1	
28			-.150,-1	-.280,-2	
29			-.436,-1	-.484,-1	
30			.165,-1	.272,-1	
31			.581,-1	-.163,-1	
32			.977,-2	.496,-1	
33			.468,-1	-.266,-1	
34			-.149,-1	.228,-1	
35			.165,-1	.504,-1	
36			.148,-1	.362,-1	
37			.117,-1	.106,-1	
38			.441,-1	-.589,-2	
39			-.212,-1	.200,-2	
40			.518,-2	-.158,-1	
41			-.216,-1	.569,-1	
42			.148,-1	.225,-1	
43			.174,-2	-.366,-1	
44			-.163,-1	.292,-1	
45			.216,-1	.261,-1	
46			-.901,-2	.175,-1	
47			.194,-1	.395,-1	
48			.210,-1	.238,-1	
49			-.694,-2	-.143,-1	
50			-.309,-1	-.231,-1	
51			-.284,-1	-.815,-2	
52			-.191,-1	-.131,-1	
53			.227,-1	-.123,-1	
54			-.268,-3	.158,-1	
55			.119,-1	.218,-2	
56			.850,-2	.161,-1	
57			.865,-3	.483,-2	
58			-.640,-1	.174,-1	
59			-.330,-1	.444,-2	
60			.279,-1	-.452,-1	

Run No. 27; u component

K	Anemometer Position Number 1	2	3	4	5
00	1.000	1.000	1.000		
01	.841	.824	.776		
02	.768	.699	.632		
03	.725	.631	.548		
04	.691	.585	.501		
05	.665	.540	.448		
06	.639	.502	.400		
07	.601	.478	.372		
08	.582	.456	.356		
09	.541	.434	.346		
10	.515	.421	.307		
11	.502	.430	.284		
12	.485	.430	.269		
13	.468	.407	.263		
14	.442	.376	.251		
15	.428	.357	.260		
16	.418	.346	.247		
17	.414	.325	.227		
18	.401	.331	.204		
19	.397	.332	.214		
20	.374	.316	.210		
21	.359	.306	.205		
22	.350	.295	.173		
23	.339	.284	.154		
24	.335	.276	.163		
25	.327	.255	.175		
26	.320	.249	.175		
27	.324	.244	.163		
28	.324	.245	.171		
29	.318	.234	.161		
30	.312	.209	.155		
31	.315	.211	.139		
32	.315	.213	.157		
33	.315	.202	.171		
34	.305	.174	.175		
35	.289	.151	.159		
36	.287	.148	.143		
37	.288	.134	.121		
38	.284	.127	.130		
39	.281	.110	.123		
40	.270	.110	.146		
41	.271	.103	.144		
42	.267	.826,-1	.149		
43	.261	.830,-1	.163		
44	.261	.983,-1	.160		
45	.270	.112	.140		
46	.273	.105	.116		
47	.273	.114	107		
48	.258	.119	.903,-1		
49	.251	.111	.806,-1		
50	.246	.847,-1	.754,-1		
51	.245	.653,-1	.698,-1		
52	.250	.560,-1	.576,-1		
53	.235	.494,-1	.606,-1		
54	.226	.461,-1	.685,-1		
55	.213	.515,-1	.746,-1		
56	.206	.520,-1	.640,-1		
57	.204	.510,-1	.499,-1		
58	.201	.453,-1	.566,-1		
59	.190	.460,-1	.558,-1		
60	.186	.409,-1	.514,-1		

Run No. 27; v component

K	Anemometer Position Number 1	2	3	4	5
00	1.000	1.000	1.000		
01	.739	.7.0	.827		
02	.660	.683	.777		
03	.603	.654	.734		
04	.551	.597	.688		
05	.523	.555	.641		
06	.480	.510	.606		
07	.454	.476	.578		
08	.429	.446	.558		
09	.405	.417	.548		
10	.392	.392	.531		
11	.372	.358	.522		
12	.355	.334	.496		
13	.335	.333	.476		
14	.307	.324	.460		
15	.275	.313	.435		
16	.255	.293	.428		
17	.234	.291	.404		
18	.229	.282	.388		
19	.226	.258	.370		
20	.220	.238	.374		
21	.206	.243	.373		
22	.195	.236	.373		
23	.193	.196	.357		
24	.182	.194	.347		
25	.181	.180	.342		
26	.195	.168	.322		
27	.179	.156	.315		
28	.192	.157	.301		
29	.186	.159	.290		
30	.178	.159	.288		
31	.163	.160	.275		
32	.144	.155	.272		
33	.139	.145	.264		
34	.104	.129	.261		
35	.099,-1	.127	.249		
36	.755,-1	.130	.246		
37	.714,-1	.117	.235		
38	.616,-1	.117	.228		
39	.782,-1	.119	.222		
40	.966,-1	.111	.210		
41	.933,-1	.105	.215		
42	.866,-1	.113	.208		
43	.891,-1	.136	.224		
44	.924,-1	.136	.213		
45	.983,-1	.112	.215		
46	.882,-1	.101	.211		
47	.866,-1	.896,-1	.220		
48	.866,-1	.881,-1	.214		
49	.924,-1	.785,-1	.211		
50	.924,-1	.716,-1	.190		
51	.950,-1	.778,-1	.187		
52	.983,-1	.741,-1	.172		
53	.712,-1	.852,-1	.165		
54	.829,-1	.658,-1	.159		
55	.645,-1	.472,-1	.156		
56	.699,-1	.587,-1	.147		
57	.652,-1	.454,-1	.142		
58	.676,-1	.399,-1	.144		
59	.761,-1	.235,-1	.140		
60	.666,-1	.271,-1	.111		

Run No. 27; w component

	Anemometer Position Number				
K	1	2	3	4	5
00	1.000	1.000	1.000		
01	.624	.100	.118		
02	.515	.698,-1	.773,-1		
03	.504	.348,-1	.327,-1		
04	.448	.345,-1	.282,-1		
05	.399	.879,-2	-.152,-1		
06	.356	.835,-1	-.111,-1		
07	.325	.700,-1	-.591,-1		
08	.340	-.489,-1	.676,-2		
09	.365	.591,-1	.288,-1		
10	.344	.152,-1	.278,-1		
11	.339	-.250,-1	.111,-1		
12	.323	.481,-1	-.841,-2		
13	.328	.385,-2	.458,-1		
14	.355	-.251,-1	-.140,-1		
15	.283	-.810,-2	-.533,-1		
16	.268	.359,-2	-.394,-2		
17	.315	-.184,-1	.145,-1		
18	.335	-.207,-1	-.356,-1		
19	.338	.417,-2	-.173,-1		
20	.315	.168,-1	-.869,-2		
21	.310	.105,-1	-.520,-1		
22	.321	.151,-1	-.486,-1		
23	.297	-.848,-2	-.595,-1		
24	.282	.207,-1	-.580,-2		
25	.274	-.172,-1	-.122,-1		
26	.276	-.478,-3	-.397,-1		
27	.349	.194,-1	.151,-1		
28	.358	.773,-2	.636,-2		
29	.333	-.506,-2	.116,-1		
30	.322	-.304,-1	.116,-1		
31	.348	-.433,-1	-.494,-1		
32	.320	.109,-1	-.220,-1		
33	.310	-.201,-1	.541,-1		
34	.276	-.417,-1	-.124,-2		
35	.269	-.153,-1	.468,-2		
36	.300	.138,-1	.132,-2		
37	.294	.260,-1	.281,-1		
38	.294	-.959,-2	.206,-1		
39	.254	.405,-1	-.847,-2		
40	.253	.190,-1	-.307,-1		
41	.253	-.190,-2	.280,-1		
42	.213	-.292,-1	-.201,-1		
43	.177	-.425,-2	-.655,-2		
44	.140	.749,-2	.699,-1		
45	.128	.104,-1	.308,-1		
46	.149	.391,-1	-.206,-2		
47	.158	.221,-1	-.400,-1		
48	.127	.891,-1	.390,-3		
49	.145	.310,-1	-.322,-2		
50	.121	.187,-1	.336,-1		
51	.108	.785,-2	-.179,-3		
52	.106	-.199,-1	.307,-3		
53	.587,-1	-.121,-1	.147,-1		
54	.650,-1	.510,-2	.642,-1		
55	.129	.124,-1	.478,-1		
56	.854,-1	.558,-1	-.149,-1		
57	.736,-1	-.168,-1	-.247,-1		
58	.112	.425,-1	.597,-2		
59	.115	-.311,-1	-.903,-2		
60	.113	.359,-1	-.195,-1		

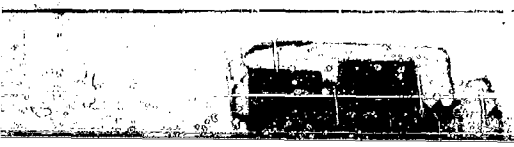

Run No. 28; u component

	Anemometer Position Number				
x	1	2	3	4	5
00	1.000	1.000	1.000	1.000	1.000
01	.829	.739	.746	.849	.784
02	.693	.668	.621	.713	.651
03	.614	.597	.550	.620	.558
04	.559	.552	.488	.549	.506
05	.531	.537	.463	.503	.461
06	.493	.515	.442	.451	.405
07	.469	.485	.417	.417	.375
08	.452	.481	.396	.410	.365
09	.438	.485	.376	.392	.366
10	.431	.474	.339	.377	.349
11	.434	.470	.360	.375	.321
12	.441	.465	.352	.377	.303
13	.441	.444	.338	.390	.288
14	.417	.437	.317	.377	.272
15	.400	.429	.286	.396	.272
16	.376	.425	.274	.380	.254
17	.355	.399	.281	.361	.229
18	.338	.372	.276	.333	.219
19	.327	.362	.271	.312	.203
20	.310	.377	.285	.299	.188
21	.308	.373	.272	.278	.177
22	.311	.360	.258	.257	.161
23	.319	.357	.250	.245	.161
24	.322	.344	.250	.245	.161
25	.314	.351	.255	.266	.168
26	.313	.356	.245	.289	.197
27	.306	.348	.240	.312	.211
28	.311	.350	.252	.321	.204
29	.291	.324	.250	.318	.177
30	.279	.306	.252	.312	.167
31	.280	.287	.225	.324	.194
32	.267	.276	.247	.333	.196
33	.253	.270	.220	.336	.197
34	.248	.251	.217	.336	.203
35	.240	.248	.205	.358	.222
36	.242	.249	.215	.367	.234
37	.239	.235	.230	.373	.246
38	.220	.224	.223	.358	.250
39	.214	.219	.198	.340	.243
40	.212	.212	.192	.327	.249
41	.198	.207	.195	.321	.228
42	.197	.202	.185	.307	.212
43	.211	.199	.174	.291	.210
44	.228	.221	.170	.269	.224
45	.237	.233	.188	.248	.227
46	.244	.229	.196	.227	.230
47	.261	.225	.186	.210	.232
48	.263	.222	.154	.211	.238
49	.250	.237	.141	.216	.251
50	.240	.247	.120	.236	.257
51	.246	.227	.803,-1	.257	.262
52	.250	.235	.792,-1	.262	.245
53	.253	.244	.733,-1	.260	.233
54	.262	.231	.850,-1	.244	.217
55	.260	.219	.114	.214	.218
56	.264	.213	.109	.180	.199
57	.262	.225	.120	.149	.183
58	.260	.225	.122	.125	.190
59	.265	.228	.113	.116	.195
60	.251	.227	.105	.106	.203

Run No. 28; v component

	Anemometer Position Number				
K	1	2	3	4	5
00	1.000	1.000	1.000	1.000	1.000
01	.410	.475	.429	.439	.276
02	.303	.272	.315	.231	.835,-1
03	.199	.175	.223	.182	.674,-1
04	.177	.145	.178	.137	.524,-1
05	.175	.133	.163	.155	.265,-1
06	.146	.868,-1	.161	.129	.517,-1
07	.159	.870,-1	.146	.147	.660,-1
08	.136	.114	.161	.128	.697,-1
09	.160	.877,-1	.160	.167	.601,-1
10	.815,-1	.570,-1	.142	.168	.990,-2
11	.901,-1	.782,-1	.142	.157	.201,-1
12	.112	.109	.135	.117	.974,-1
13	.947,-1	.902,-1	.102	.112	.801,-1
14	.120	.931,-1	.106	.103	.564,-1
15	.114,-1	.931,-1	.499,-1	.113	.532,-1
16	.121	.123	.762,-1	.130	.339,-1
17	.112	.108	.909,-1	.142	.117,-1
18	.108	.114	.644,-1	.109	.247,-1
19	.907,-1	.108	.120	.109	.426,-1
20	.798,-1	.946,-1	.117	.109	.390,-1
21	.497,-1	.908,-1	.119	.865,-1	.667,-1
22	.305,-1	.818,-1	.120	.856,-1	.208,-1
23	.540,-1	.797,-1	.115	.875,-1	.465,-1
24	.581,-1	.693,-1	.761,-1	.107	.222,-1
25	.549,-1	.392,-1	.620,-1	.114	.461,-2
26	.283,-1	.438,-1	.510,-1	.133	.408,-1
27	.474,-1	.310,-1	.690,-1	.144	.144,-1
28	.335,-1	.499,-1	.376,-1	.126	.168,-1
29	.368,-1	.916,-1	.811,-1	.111	.279,-1
30	.590,-1	.124	.602,-1	.855,-1	.443,-2
31	.753,-1	.859,-1	.808,-1	.846,-1	.113,-1
32	.834,-1	.829,-1	.838,-1	.833,-1	-.127,-2
33	.603,-1	.600,-1	.952,-1	.112	.553,-1
34	.528,-1	.115	.698,-1	.717,-1	.508,-1
35	.304,-1	.116	.924,-1	.909,-1	.342,-1
36	.201,-1	.886,-1	.586,-1	.902,-1	.433,-1
37	-.125,-1	.517,-1	.559,-1	.825,-1	.539,-1
38	.133,-1	.149,-1	.430,-1	.476,-1	.342,-1
39	.156,-1	.674,-2	.202,-1	.298,-1	.164,-1
40	.337,-1	.483,-1	.499,-1	.346,-1	.468,-1
41	.314,-1	.770,-1	.713,-1	.304,-1	.389,-1
42	.318,-1	.744,-1	.431,-1	.199,-1	.390,-1
43	.294,-1	.105	.263,-1	.355,-1	.822,-2
44	.245,-1	.817,-1	.327,-1	.519,-1	.204,-1
45	.135,-1	.114	-.808,-2	.587,-1	.263,-1
46	.209,-1	.771,-1	.169,-1	.436,-1	.204,-1
47	.191,-1	.301,-1	.278,-1	.299,-1	.281,-1
48	.421,-1	.441,-1	.411,-1	.470,-1	-.211,-1
49	.330,-1	.483,-1	.304,-1	.286,-1	-.889,-2
50	.150,-1	.541,-1	.821,-1	.618,-1	-.103,-1
51	.488,-1	.517,-1	.362,-1	.997,-1	.180,-1
52	.377,-1	.666,-1	.356,-1	.293,-1	-.210,-1
53	.378,-1	.335,-1	.964,-2	.288,-1	.513,-1
54	.493,-1	.644,-1	-.459,-2	.681,-1	-.139,-2
55	.646,-1	.592,-1	.333,-2	.526,-1	-.150,-1
56	.400,-1	.738,-1	-.140,-2	.526,-1	-.102,-1
57	.547,-1	.835,-1	.209,-1	.365,-1	-.342,-1
58	.435,-1	.633,-1	.366,-1	.161,-1	-.219,-1
59	.511,-1	.490,-1	-.181,-2	.198,-1	.706,-2
60	.855,-1	.481,-1	.181,-1	.162,-1	.164,-1

Run No. 28; w component

K	Anemometer Position Number 1	2	3	4	5
00	1.000	1.000	1.000	1.000	1.000
01	.111	.109	.989,-1	.258	.151
02	.371,-1	.465,-1	.812,-1	.112	.455,-1
03	.292,-1	.902,-1	.900,-1	.413,-1	.185,-1
04	-.237,-1	.605,-2	.234,-1	.429,-1	-.427,-1
05	-.441,-3	-.347,-1	.293,-1	.809,-2	-.510,-1
06	.103,-1	-.290,-1	.943,-1	-.228,-1	.306,-1
07	.282,-1	-.395,-1	.558,-1	-.267,-1	.259,-1
08	.917,-2	-.397,-1	.224,-1	-.976,-2	.344,-1
09	-.320,-1	.150,-6	.294,-1	.450,-1	.510,-1
10	-.640,-2	-.680,-2	.379,-1	.611,-1	.353,-1
11	.192,-1	.184,-1	.120,-1	.514,-1	-.529,-1
12	-.466,-1	-.367,-2	-.350,-2	.523,-2	-.208,-1
13	-.222,-1	.302,-1	.288,-1	.551,-1	.166,-1
14	-.278,-1	-.145,-2	-.316,-1	-.146,-1	-.873,-2
15	-.201,-1	.178,-1	.156,-1	.144,-1	.347,-1
16	-.320,-1	.229,-1	.227,-1	.130,-1	.860,-2
17	-.135,-1	-.508,-2	-.294,-1	.228,-1	-.369,-1
18	-.233,-1	-.630,-1	-.316,-1	-.316,-1	-.512,-1
19	-.486,-1	-.467,-1	-.148,-1	-.369,-1	-.142,-1
20	-.424,-1	-.943,-2	-.595,-1	-.219,-1	-.504,-1
21	-.352,-1	-.535,-1	-.362,-1	-.441,-1	-.287,-1
22	.858,-2	-.165,-1	-.980,-2	-.407,-1	-.347,-2
23	-.155,-1	-.408,-2	-.387,-1	-.108	-.267,-1
24	.356,-1	-.122,-1	-.131,-1	-.102	.708,-2
25	-.905,-2	-.229,-1	-.419,-1	-.681,-1	-.182,-1
26	.136,-1	-.210,-1	.835,-2	-.368,-1	-.399,-1
27	.103,-1	.356,-1	.180,-1	-.650,-1	-.203,-1
28	-.185,-1	.229,-2	-.205,-1	-.356,-1	.595,-2
29	.207,-1	.156,-1	-.407,-1	-.386,-1	-.118,-1
30	.142,-1	-.141,-1	.150,-2	-.286,-1	-.631,-1
31	.361,-1	-.687,-1	-.179,-1	-.236,-1	.101,-1
32	.405,-2	-.252,-1	-.135,-1	-.181,-1	.391,-1
33	.129,-1	-.230,-1	-.139,-1	.211,-1	.174,-1
34	-.729,-2	-.456,-1	-.299,-1	.325,-1	.369,-1
35	.284,-1	-.128,-1	-.241,-1	.235,-1	.410,-1
36	-.252,-3	.230,-1	-.521,-1	.137,-1	-.101,-1
37	-.115,-2	-.324,-1	-.169,-1	.347,-1	-.964,-2
38	-.309,-1	.184,-1	.212,-1	.407,-1	-.609,-1
39	-.294,	.104,-1	.598,-1	.322,-1	-.377,-1
40	-.158,-1	.143,-1	-.476,-1	-.219,-1	.680,-2
41	-.260,-1	.259,-1	.584,-2	.581,-2	.597,-1
42	.691,-2	-.803,-2	-.113,-1	.249,-1	.366,-1
43	.449,-1	.336,-1	.390,-2	.377,-1	.331,-1
44	-.100,-1	.478,-1	-.104,-1	.145,-1	.545,-1
45	-.105,-1	.590,-1	.296,-1	.254,-1	-.111,-1
46	-.197,-1	.939,-1	-.450,-2	.359,-1	-.826,-2
47	.114,-1	.288,-1	.195,-1	.629,-1	-.369,-1
48	-.126,-1	.526,-2	.407,-1	-.392,-2	-.358,-1
49	.790,-3	.196,-1	-.230,-1	.465,-2	-.123,-2
50	.464,-1	.156,-1	.278,-1	.517,-1	-.273,-1
51	-.697,-2	.227,-1	.106,-1	.894,-1	.303,-1
52	-.153,-1	-.135,-1	-.311,-1	.250,-1	.650,-2
53	.328,-1	-.424,-1	.402,-1	.185,-1	-.760,-2
54	.207,-1	.261,-1	.270,-2	.605,-1	.164,-1
55	-.379,-2	.431,-1	.302,-2	.187,-1	-.219,-1
56	-.328,-1	-.826,-2	.330,-2	.268,-1	-.260,-1
57	-.125,-2	-.413,-2	.758,-1	-.226,-1	-.245,-1
58	.595,-1	-.875,-2	.416,-1	-.444,-1	-.115,-1
59	-.355,-1	.261,-1	.333,-1	-.751,-1	.664,-2
60	-.299,-1	-.189,-2	.823,-2	.413,-1	.104,-1

Run No. 32; u Component

K	Anemometer Position Number 1	2	3	4	5
00	1.000	1.000	1.000	1.000	1.000
01	.930	.929	.930	.934	.927
02	.880	.880	.882	.890	.876
03	.862	.853	.860	.871	.851
04	.856	.844	.857	.856	.840
05	.853	.840	.854	.844	.840
06	.850	.828	.854	.835	.837
07	.848	.825	.850	.823	.841
08	.836	.811	.857	.820	.847
09	.830	.837	.854	.820	.844
10	.830	.840	.850	.814	.844
11	.833	.840	.844	.817	.847
12	.836	.844	.850	.820	.854
13	.842	.847	.850	.817	.851
14	.842	.837	.850	.811	.851
15	.839	.834	.844	.794	.834
16	.836	.828	.834	.791	.831
17	.839	.828	.841	.780	.834
18	.842	.831	.834	.797	.834
19	.842	.837	.841	.800	.834
20	.839	.840	.847	.799	.840
21	.830	.837	.847	.802	.851
22	.830	.834	.844	.799	.829
23	.827	.831	.834	.799	.820
24	.824	.834	.831	.808	.823
25	.821	.837	.841	.805	.823
26	.827	.834	.838	.811	.823
27	.824	.825	.829	.800	.820
28	.818	.816	.824	.802	.820
29	.815	.819	.823	.802	.823
30	.812	.816	.829	.802	.823
31	.806	.810	.821	.799	.823
32	.812	.810	.821	.799	.823
33	.821	.807	.826	.797	.820
34	.821	.810	.823	.799	.823
35	.818	.822	.818	.797	.817
36	.821	.825	.822	.797	.817
37	.818	.819	.818	.794	.815
38	.818	.816	.822	.797	.812
39	.821	.816	.815	.799	.809
40	.815	.816	.815	.790	.795
41	.809	.807	.815	.784	.792
42	.806	.798	.806	.773	.778
43	.801	.791	.803	.773	.778
44	.798	.788	.809	.781	.781
45	.809	.810	.815	.797	.809
46	.812	.816	.812	.789	.789
47	.804	.807	.806	.790	.789
48	.801	.807	.798	.784	.792
49	.801	.807	.792	.787	.795
50	.812	.807	.795	.794	.795
51	.809	.807	.792	.781	.784
52	.806	.801	.796	.781	.787
53	.795	.794	.789	.775	.787
54	.795	.788	.792	.769	.789
55	.795	.785	.795	.766	.787
56	.792	.782	.798	.766	.781
57	.786	.782	.795	.778	.775
58	.786	.776	.786	.784	.778
59	.786	.782	.792	.781	.775
60	.783	.788	.790	.778	.772

Run No. 32; v component

K	Anemometer Position Number 1	2	3	4	5
00	1.000	1.000	1.000	1.000	1.000
01	.209	.373	.225	.375	.208
02	.147	.323	.134	.206	.127
03	.120	.260	.946,-1	.145	.649,-1
04	.949,-1	.283	.115	.121	.702,-1
05	.124	.210	.147	.142	.878,-1
06	.115	.286	.152	.834,-1	.128
07	.155	.254	.114	.120	.740,-2
08	.999,-1	.270	.122	.120	.508,-1
09	.860,-1	.260	.128	.174	.481,-1
10	.915,-1	.240	.140	.141	.119
11	.141	.251	.155	.169	.634,-1
12	.110	.238	.891,-1	.106	.697,-1
13	.141	.255	.461,-1	.937,-1	.204,-1
14	.140	.249	.111	.522,-1	.618,-1
15	.103	.271	.113	.495,-1	.912,-1
16	.448,-1	.233	.102	.937,-1	.893,-1
17	.912,-1	.254	.771,-1	.941,-1	.790,-1
18	.949,-1	.247	.966,-1	.844,-1	.309,-1
19	.843,-1	.174	.857,-1	.875,-1	.239,-1
20	.945,-1	.244	.102	.937,-1	-.124,-1
21	.755,-1	.265	.978,-1	.668,-1	.223,-1
22	.805,-1	.217	.525,-1	.714,-1	.357,-1
23	.264,-1	.224	.702,-1	-.154,-1	.136,-1
24	.599,-1	.207	.919,-2	-.241,-1	.702,-1
25	.919,-1	.183	.609,-1	.241,-1	.109
26	.929,-1	.241	.912,-1	-.132,-1	.135,-2
27	.608,-1	.190	.234,-1	.272,-2	-.156,-1
28	-.551,-2	.210	.450,-1	.125,-1	.395,-1
29	-.956,-2	.202	.849,-1	.556,-2	-.194,-1
30	.502,-1	.215	.519,-1	.571,-3	.302,-1
31	.284,-1	.216	.446,-1	-.862,-3	.504,-1
32	.480,-1	.225	.698,-1	.624,-2	.229,-1
33	-.159,-1	.180	-.760,-2	.216,-1	.580,-1
34	-.300,-1	.199	-.281,-1	-.566,-1	.129
35	-.361,-1	.201	-.450,-1	.219,-2	.302,-1
36	.375,-2	.197	-.868,-2	-.810,-2	.999,-1
37	.684,-1	.209	.632,-1	.265,-1	.569,-1
38	.761,-1	.210	.643,-1	.605,-2	.359,-1
39	.126,-1	.196	.117	-.902,-2	.538,-1
40	-.6 6,-3	.199	.586,-1	.169,-1	.307,-1
41	-.225,-2	.217	.184,-1	.208,-1	-.206,-1
42	.786,-1	.220	.222,-1	.169,-1	-.401,-1
43	-.912,-2	.212	.101,-1	.153,-1	-.691,-1
44	-.298,-2	.186	-.492,-1	.289,-1	-.435,-2
45	.566,-2	.203	-.605,-1	.224,-1	-.250,-1
46	.217,-1	.231	-.461,-1	.507,-1	.427,-1
47	-.162,-1	.247	.170,-1	.393,-1	.401,-1
48	.335,-1	.202	.241,-1	.444,-1	.160,-1
49	.658,-1	.208	-.266,-1	-.[illegible],-1	.576,-1
50	.452,-2	.196	-.319,-1	-.242,-1	.454,-1
51	.426,-1	.201	-.225,-3	-.170,-1	.387,-1
52	.306,-1	.211	.172,-1	.184,-1	.260,-1
53	-.775,-2	.215	.249,-1	-.134,-1	-.202,-2
54	-.155,-1	.192	-.193,-1	.148,-1	.576,-2
55	.193,-1	.190	-.299,-1	.170,-1	.129,-1
56	.403,-2	.175	-.446,-1	-.838,-2	.157,-1
57	.299,-1	.160	-.336,-1	.829,-2	-.611,-1
58	.102,-1	.211	.145,-1	.175,-1	-.721,-2
59	.441,-1	.229	.320,-1	.746,-2	-.175,-1
60	-.169,-2	.175	-.674,-2	-.856,-1	-.527,-1

Run No. 28; w component

K	Anemometer Position Number 1	2	3	4	5
00	1.000	1.000	000	1.000	1.000
01	.788,-1	.590,-1	50[illegible],-1	.976,-1	.[illegible]75,-1
02	.154,-1	.122,-1	.766,-1	.454,-2	.247,-1
03	.140,-1	.755,-1	-.129,-1	-.432,-2	-.111,-1
04	.150,-1	.104,-1	-.205,-1	.126,-1	.182,-2
05	.602,-1	.620,-1	-.170,-1	.294,-1	.1[illegible]6,-1
06	-.170,-1	.427,-1	.412,-1	.400,-1	-.[illegible]65,-1
07	.209,-1	.[illegible]09,-1	-.546,-1	.512,-1	.[illegible]7[illegible],-1
08	-.201,-1	.405,-1	-.12[illegible],-1	-.705,-1	-.2[illegible]0,-1
09	-.134,-1	-.204,-1	-.4[illegible]8,-1	.147,-1	.[illegible]1,-1
10	.251,-1	.170,-1	-.143,-1	.291,-1	-.[illegible]7,-2
11	-.767,-1	.22[illegible],-1	-.149	-.238,-1	-.[illegible]1,-1
12	.157,-2	.[illegible]84,-1	.241,-1	-.[illegible]91,-2	-.[illegible]43,-1
13	.4[illegible],-1	.12[illegible],-1	-.172,-1	.[illegible]24,-2	.[illegible]04,-1
14	.172,-2	.11[illegible],-1	.406,-1	-.754,-1	.4[illegible],-2
15	-.165,-1	-.[illegible]20,-2	.2[illegible],-1	-.[illegible],-1	.577,-1
16	-.121,-1	-.121,-1	.[illegible]4[illegible],-1	.1[illegible],-1	.[illegible]30,-2
17	.427,-1	.[illegible]60,-1	.114,-1	.202,-1	.[illegible]10,-1
18	.[illegible]40,-1	.200,-1	-.4[illegible]6,-1	.242,-1	.23[illegible],-1
19	-.[illegible]69,-1	.2[illegible],-1	-.1[illegible]7,-2	.4[illegible],-2	.[illegible]74,-1
20	.[illegible]01,-1	.642,-1	.1[illegible]2,-1	.[illegible]20,-2	.[illegible]34,-1
21	.[illegible]95,-1	-.1[illegible],-1	.7[illegible]7,-1	.[illegible]18,-1	-.[illegible]72,-1
22	.1[illegible],-1	-.77[illegible],-2	.7[illegible]1,-1	.1[illegible],-1	-.[illegible]42,-2
23	.50[illegible],-1	.[illegible]0[illegible],-1	.11[illegible],-1	-.[illegible]61,-1	-.4[illegible],-1
24	.551,-2	.[illegible]74,-1	-.[illegible],-1	.[illegible]97,-2	-.[illegible],-2
25	-.201,-2	.165,-1	.[illegible]21,-2	-.147,-1	-.210,-1
26	-.221,-1	.642,-1	.15[illegible],-2	.[illegible]14,-1	-.[illegible]16,-1
27	.[illegible]73,-1	.220,-1	-.4[illegible],-1	.[illegible]0[illegible],-1	-.[illegible]72,-1
28	-.179,-1	-.[illegible]0[illegible],-1	-.[illegible]2[illegible],-1	.[illegible]27,-2	-.1[illegible],-1
29	-.[illegible]42,-1	.[illegible]07,-1	.[illegible]15,-2	-.407,-1	.[illegible]4,-1
30	.26[illegible],-1	.[illegible]4[illegible],-2	-.752,-1	-.136,-1	.44[illegible],-1
31	.24[illegible],-1	.1[illegible]2,-1	-.[illegible]14,-2	-.[illegible]04,-1	-.[illegible]4,-1
32	-.244,-1	.204,-1	-.7[illegible]9,-1	-.[illegible]03,-1	-.[illegible],-1
33	.212,-1	-.[illegible]47,-1	-.427,-2	-.[illegible]3,-1	.[illegible]1[illegible],-1
34	.776,-1	.[illegible]42,-1	-.721,-2	.[illegible]05,-2	-.[illegible]2[illegible],-1
35	-.[illegible]6[illegible],-1	.[illegible]47,-1	-.[illegible]14,-2	-.[illegible],-2	.[illegible]51,-2
36	-.[illegible]35,-1	-.[illegible]2[illegible],-1	-.[illegible]08,-1	-.4[illegible],-1	.[illegible]72,-1
37	.[illegible]45,-1	.[illegible]20[illegible],-1	.[illegible]09,-1	-.[illegible]11,-1	.[illegible]2[illegible],-1
38	.270,-1	.[illegible]90,-1	.4[illegible]9,-1	-.[illegible]15,-1	.201,-1
39	.[illegible]96,-2	.[illegible]96,-1	.[illegible]17,-2	.[illegible]1[illegible],-2	.[illegible]4,-1
40	-.[illegible]96,-1	.[illegible]1[illegible],-1	.[illegible]09,-2	.[illegible]66,-1	-.[illegible]42,-1
41	.[illegible]51,-1	-.[illegible]29[illegible],-1	.[illegible]20,-1	-.[illegible]10[illegible],-1	-.[illegible]2[illegible],-1
42	-.[illegible]1[illegible],-1	.[illegible]36,-1	-.[illegible]23,-1	-.[illegible]13[illegible],-1	-.[illegible]46[illegible],-1
43	.[illegible]96,-2	-.[illegible]02,-2	.[illegible]12[illegible],-1	.[illegible]20[illegible],-1	.[illegible]17,-2
44	-.[illegible]0[illegible],-1	.277,-1	.[illegible]17,-1	.[illegible]14[illegible],-1	.[illegible]11,-1
45	-.221,-1	.[illegible]0[illegible],-2	-.[illegible]21,-1	.[illegible]40,-1	-.[illegible]07,-2
46	.[illegible]67,-2	.[illegible]04,-1	-.[illegible]31,-1	.[illegible]13[illegible],-1	.[illegible]14[illegible],-2
47	-.270,-1	-.[illegible]70,-1	.[illegible]55,-2	.[illegible]29[illegible],-1	.[illegible]04,-1
48	-.[illegible]40,-2	-.[illegible]27,-1	-.[illegible]24,-1	-.[illegible]30[illegible],-1	.[illegible]01
49	.[illegible]54,-2	.[illegible]36,-1	-.[illegible]31,-1	-.[illegible]19[illegible],-1	.[illegible]40,-1
50	.[illegible]77,-1	.[illegible]50,-2	.[illegible]70[illegible],-2	-.[illegible]11[illegible],-1	.[illegible]02,-1
51	.705,-1	.[illegible]58,-2	-.[illegible]39,-1	-.[illegible]27,-1	-.[illegible]70,-1
52	.[illegible]03,-1	.[illegible]77,-1	.[illegible]44,-1	.[illegible]13[illegible],-1	-.[illegible]29[illegible],-1
53	-.[illegible]22,-2	.[illegible]42,-1	.[illegible]42,-1	.[illegible]10[illegible],-1	-.[illegible]11,-1
54	.[illegible]40,-1	.[illegible]00,-1	-.[illegible]46,-1	-.[illegible]43[illegible],-1	.[illegible]74,-1
55	.[illegible]02,-1	.[illegible]24,-1	-.[illegible]14,-1	-.[illegible]11[illegible],-1	.[illegible]36,-1
56	-.[illegible]94,-2	.[illegible]42,-1	-.[illegible]40,-1	.[illegible]20,-1	.[illegible]2[illegible],-1
57	-.[illegible]10,-1	.[illegible]81,-1	-.[illegible]92,-1	-.[illegible]45,-1	.[illegible]7[illegible],-1
58	.272,-1	-.[illegible]09,-2	.[illegible]2[illegible],-1	-.[illegible]74,-1	.4[illegible],-1
59	.[illegible]65,-1	-.[illegible]00,-1	.[illegible]42,-1	-.[illegible]14,-1	.[illegible]72,-1
60	-.429,-2	.[illegible]06,-2	.[illegible]54,-1	-.[illegible]50,-1	-.[illegible]54,-1

Run No. 35s; u component

K	Anemometer Position Number 1	2	3	4	5
00	1.000	1.000	1.000	1.000	1.000
01	.746	.783	.796	.817	.776
02	.585	.633	.645	.653	.634
03	.502	.569	.575	.566	.545
04	.456	.543	.532	.513	.499
05	.406	.545	.499	.484	.469
06	.385	.532	.471	.464	.464
07	.369	.515	.437	.450	.450
08	.366	.500	.416	.443	.446
09	.313	.485	.397	.431	.434
10	.304	.476	.384	.431	.423
11	.293	.463	.367	.435	.399
12	.281	.459	.355	.425	.385
13	.283	.444	.361	.423	.394
14	.283	.425	.374	.413	.376
15	.284	.414	.363	.398	.385
16	.259	.406	.357	.396	.384
17	.239	.403	.367	.396	.377
18	.212	.410	.367	.393	.369
19	.191	.410	.357	.391	.366
20	.165	.414	.367	.396	.362
21	.150	.403	.369	.403	.357
22	.180	.403	.372	.382	.361
23	.184	.410	.372	.382	.361
24	.169	.410	.363	.384	.369
25	.155	.399	.358	.374	.381
26	.140	.382	.318	.373	.376
27	.127	.375	.316	.386	.373
28	.125	.376	.312	.401	.357
29	.126	.379	.323	.409	.350
30	.150	.384	.316	.393	.334
31	.132	.399	.303	.387	.328
32	.114	.404	.321	.394	.330
33	.120	.393	.303	.393	.329
34	.140	.386	.305	.372	.343
35	.147	.389	.309	.367	.341
36	.150	.399	.338	.382	.315
37	.172	.412	.301	.384	.303
38	.171	.433	.378	.379	.312
39	.154	.423	.386	.362	.311
40	.169	.400	.397	.342	.297
41	.161	.388	.391	.338	.309
42	.191	.382	.382	.328	.326
43	.198	.388	.384	.330	.328
44	.221	.395	.361	.330	.339
45	.219	.404	.389	.328	.362
46	.224	.393	.388	.328	.360
47	.231	.370	.314	.330	.349
48	.240	.384	.323	.343	.360
49	.230	.384	.335	.340	.364
50	.229	.365	.340	.338	.374
51	.223	.365	.348	.355	.377
52	.214	.361	.348	.365	.366
53	.214	.371	.350	.379	.370
54	.221	.361	.342	.381	.366
55	.237	.367	.325	.360	.355
56	.226	.369	.308	.350	.331
57	.210	.382	.318	.338	.315
58	.228	.376	.333	.320	.304
59	.247	.358	.333	.313	.297
60	.267	.350	.340	.308	.293

Run No. 35 a; v component

K	Anemometer Position Number 1	2	3	4	5
00	1.000	1.000	1.000	1.000	1.000
01	.329	.376	.372	.407	.404
02	.234	.295	.226	.313	.242
03	.208	.277	.174	.333	.228
04	.124	.218	.129	.297	.220
05	.171	.251	.192	.279	.193
06	.140	.256	.104	.230	.213
07	.179	.263	.126	.277	.191
08	.163	.220	.854,-1	.247	.176
09	.224	.268	.903,-1	.242	.215
10	.211	.230	.181	.245	.195
11	.199	.258	.169	.252	.215
12	.210	.221	.160	.225	.208
13	.198	.234	.141	.259	.169
14	.228	.230	.130	.287	.135
15	.170	.246	.149	.274	.188
16	.146	.236	.187	.269	.197
17	.159	.262	.181	.246	.179
18	.147	.225	.168	.251	.209
19	.167	.204	.145	.221	.192
20	.178	.225	.145	.214	.165
21	.215	.202	.170	.221	.160
22	.191	.211	.137	.199	.196
23	.178	.212	.174	.244	.205
24	.172	.202	.145	.218	.190
25	.154	.213	.120	.234	.182
26	.130	.224	.134	.201	.199
27	.123	.224	.165	.174	.201
28	.207	.198	.133	.187	.170
29	.193	.218	.113	.180	.174
30	.202	.206	.139	.201	.189
31	.172	.185	.153	.229	.141
32	.149	.247	.148	.209	.133
33	.131	.199	.144	.214	.165
34	.152	.201	.114	.214	.185
35	.179	.215	.101	.215	.150
36	.144	.188	.993,-1	.193	.163
37	.158	.191	.151	.186	.691,-1
38	.162	.149	.142	.201	.119
39	.190	.186	.147	.208	.190
40	.144	.209	.124	.161	.130
41	.168	.226	.151	.196	.930,-1
42	.191	.215	.128	.201	.150
43	.179	.207	.202	.206	.124
44	.126	.179	.176	.200	.158
45	.178	.194	.135	.219	.179
46	.174	.177	.163	.216	.161
47	.168	.167	.104	.243	.115
48	.189	.209	.135	.201	.169
49	.153	.210	.108	.221	.124
50	.176	.230	.137	.144	.144
51	.165	.217	.108	.153	.151
52	.137	.221	.958,-1	.237	.147
53	.145	.175	.116	.213	.159
54	.185	.176	.958,-1	.246	.187
55	.119	.166	.938,-1	.170	.184
56	.153	.163	.809,-1	.155	.170
57	.153	.205	.612,-1	.193	.162
58	.100	.203	.729,-1	.186	.201
59	.145	.246	.595,-1	.193	.141
60	.154	.204	.663,-1	.184	.156

Run No. 35 ■; w component

	Anemometer Position Number				
K	1	2	3	4	5
00	1.000	1.000	1.000	1.000	1.000
01	.484,-1	.527,-1	.111	.157	.142
02	.509,-1	.637,-1	.404,-1	.359,-1	.270,-1
03	.367,-1	.132,-1	.627,-1	.128,-1	.378,-1
04	.225,-1	-.505,-1	.703,-2	.545,-1	.564,-1
05	.149,-1	-.502,-1	.302,-1	-.240,-1	.229,-1
06	-.798,-2	.170,-1	.179,-2	-.100,-1	.270,-1
07	-.334,-1	-.160,-1	.479,-1	.319,-1	.914,-1
08	.235,-1	.910,-2	.706,-2	-.577,-2	.552,-1
09	-.168,-1	-.428,-1	-.120,-1	-.371,-2	.208,-1
10	-.400,-2	.201,-1	.209,-1	.177,-2	.629,-1
11	-.138,-1	.330,-1	-.871,-2	-.3[illegible],-1	-.192,-1
12	-.256,-1	.137,-1	-.[illegible],-2	-.387,-1	-.466,-2
13	.079,-1	.124,-1	-.562,-1	-.216,-1	.050,-1
14	-.310,-1	-.[illegible],-1	.104,-1	-.[illegible],-1	.853,-1
15	-.[illegible],-2	-.527,-1	.[illegible],-1	-.[illegible],-1	-.[illegible],-1
16	-.304,-1	-.280,-1	-.[illegible],-1	.[illegible],-2	.[illegible],-2
17	.121,-1	-.447,-1	.132,-1	.157,-1	.129,-1
18	.213,-2	.104,-2	.[illegible],-2	.212,-1	-.765,-2
19	-.359,-1	.170,-1	.[illegible],-1	.911,-3	-.[illegible],-2
20	.104,-1	-.424,-1	.[illegible],-1	.107,-1	-.213,-1
21	-.[illegible],-2	.[illegible],-1	.[illegible],-2	.319,-1	-.[illegible],-2
22	-.404,-2	-.[illegible],-1	-.[illegible],-1	-.283,-1	.156,-1
23	.[illegible],-1	-.[illegible],-2	-.[illegible],-1	-.[illegible],-1	.108,-1
24	.[illegible],-3	.[illegible],-1	-.271,-1	-.[illegible],-1	-.[illegible],-2
25	-.[illegible],-1	.[illegible],-2	.[illegible],-1	-.[illegible],-1	.714,-1
26	.124,-1	-.[illegible],-2	-.[illegible],-1	.[illegible],-2	.[illegible],-1
27	.[illegible],-2	-.[illegible],-2	.[illegible],-2	-.177,-1	.[illegible],-1
28	-.[illegible],-2	.[illegible],-1	-.[illegible],-1	.[illegible],-2	.[illegible],-1
29	.[illegible],-2	.[illegible],-1	.[illegible],-1	.[illegible],-1	.763,-2
30	.754,-2	-.[illegible],-1	.157,-1	-.[illegible],-1	.[illegible],-2
31	-.176,-1	-.[illegible],-1	-.[illegible],-1	-.[illegible],-1	-.[illegible],-1
32	-.[illegible],-1	.[illegible],-2	.[illegible],-1	-.[illegible],-1	.[illegible],-1
33	.[illegible],-1	-.[illegible],-2	.[illegible],-1	-.[illegible],-4	-.[illegible],-1
34	.[illegible],-1	.[illegible],-3	.[illegible],-2	.[illegible],-2	-.[illegible],-1
35	-.[illegible],-1	-.[illegible],-1	-.[illegible],-1	-.[illegible],-2	-.[illegible],-1
36	.[illegible],-1	.[illegible],-2	.[illegible],-1	-.[illegible],-1	.[illegible],-1
37	.[illegible],-1	.[illegible],-2	.[illegible],-1	-.[illegible],-1	.[illegible],-1
38	.[illegible],-2	.[illegible],-1	-.[illegible],-1	-.[illegible],-2	-.[illegible],-1
39	.[illegible],-1	.[illegible],-1	.[illegible],-1	.[illegible],-1	.[illegible],-1
40	.[illegible],-2	.[illegible],-1	.[illegible],-1	-.[illegible],-2	-.[illegible],-1
41	.[illegible],-1	.[illegible],-2	-.[illegible],-1	-.[illegible],-3	-.[illegible],-1
42	-.[illegible],-2	.[illegible],-1	-.[illegible],-1	-.[illegible],-2	-.[illegible],-1
43	.[illegible],-1	.[illegible],-1	-.[illegible],-2	-.[illegible],-1	.[illegible],-1
44	.[illegible],-1	.[illegible],-1	.[illegible],-1	-.[illegible],-1	-.[illegible],-2
45	-.[illegible],-1	.[illegible],-2	.[illegible],-1	-.[illegible],-1	.[illegible],-1
46	.[illegible],-1	.[illegible],-1	-.[illegible],-1	.[illegible],-1	.[illegible],-1
47	-.[illegible],-1	-.[illegible],-1	.[illegible],-1	.[illegible],-1	.[illegible],-2
48	-.[illegible],-1	-.[illegible],-1	-.[illegible],-2	.[illegible],-1	-.[illegible],-2
49	.[illegible],-1	-.[illegible],-1	-.[illegible],-1	.[illegible],-1	.[illegible],-1
50	-.[illegible],-1	.[illegible],-2	.[illegible],-1	.[illegible],-1	.[illegible],-
51	-.[illegible],-1	-.[illegible],-1	-.[illegible],-1	-.[illegible],-1	.[illegible],-1
52	.[illegible],-1	-.[illegible],-1	.[illegible],-1	.[illegible],-1	-.[illegible],-
53	-.[illegible],-1	.[illegible],-1	-.[illegible],-2	.[illegible],-1	-.[illegible],-1
54	.[illegible],-1	-.[illegible],-1	.[illegible],-2	-.[illegible],-	-.[illegible],-2
55	-.[illegible],-1	-.[illegible],-2	-.[illegible],-1	.[illegible],-1	-.[illegible],-1
56	.[illegible],-1	-.[illegible],-1	-.[illegible],-1	.[illegible],-2	-.[illegible],-1
57	.[illegible],-1	.[illegible],-1	-.[illegible],-2	-.[illegible],-1	.[illegible],-1
58	-.[illegible],-2	.[illegible],-1	-.[illegible],-1	.[illegible],-1	-.[illegible],-2
59	-.[illegible],-1	.[illegible],-1	.[illegible],-1	.[illegible],-1	-.[illegible],-1
60	.[illegible],-1	.[illegible],-1	.[illegible],-2	.[illegible],-1	-.[illegible],-1

Run No. 36; u component

K	Anemometer Position Number 1	2	3	4	5
00	1.000	1.000	1.000	1.000	1.000
01	.731	.748	.798	.780	.623
02	.542	.608	.626	.572	.437
03	.455	.547	.535	.435	.333
04	.400	.509	.482	.348	.275
05	.355	.491	.458	.289	.225
06	.331	.474	.456	.266	.201
07	.301	.473	.460	.266	.183
08	.315	.460	.453	.252	.184
09	.341	.463	.452	.249	.191
10	.341	.445	.440	.259	.194
11	.323	.434	.429	.277	.172
12	.304	.419	.414	.275	.144
13	.311	.427	.389	.289	.159
14	.273	.428	.373	.303	.159
15	.241	.433	.381	.323	.157
16	.250	.442	.376	.325	.163
17	.255	.434	.360	.334	.155
18	.288	.428	.366	.342	.177
19	.299	.422	.352	.320	.171
20	.266	.413	.411	.309	.177
21	.231	.405	.397	.315	.157
22	.228	.407	.378	.332	.146
23	.231	.424	.381	.331	.150
24	.201	.412	.374	.334	.156
25	.212	.416	.374	.319	.155
26	.251	.412	.379	.293	.136
27	.286	.421	.391	.264	.139
28	.315	.424	.415	.266	.164
29	.320	.439	.422	.270	.184
30	.326	.433	.414	.264	.186
31	.314	.424	.417	.266	.192
32	.288	.413	.412	.253	.197
33	.269	.378	.388	.252	.196
34	.269	.391	.376	.261	.208
35	.270	.375	.371	.265	.198
36	.277	.387	.353	.293	.190
37	.286	.401	.353	.300	.169
38	.277	.407	.351	.320	.179
39	.278	.424	.353	.343	.179
40	.301	.412	.343	.341	.183
41	.315	.399	.335	.323	.183
42	.289	.396	.317	.332	.166
43	.266	.407	.328	.325	.125
44	.264	.416	.351	.305	.102
45	.276	.427	.369	.289	.119
46	.292	.427	.376	.295	.123
47	.273	.424	.373	.293	.113
48	.280	.409	.379	.291	.103
49	.297	.413	.379	.286	.979,-1
50	.307	.405	.374	.272	.984,-1
51	.289	.405	.376	.247	.845,-1
52	.280	.410	.381	.242	.733,-1
53	.278	.404	.407	.241	.565,-1
54	.307	.402	.427	.235	.454,-1
55	.282	.415	.432	.219	.222,-1
56	.258	.416	.420	.225	.329,-1
57	.251	.393	.407	.253	.529,-1
58	.255	.413	.406	.276	.893,-1
59	.273	.392	.399	.286	.902,-1
60	.282	.372	.409	.289	.1[illegible]

Run No. 35, v component

	Anemometer Position Number				
K	1	2	3	4	5
00	1.000	1.000	1.000	1.000	1.000
01	.612	.757	.596	.479	.195
02	.486	.663	.466	.366	.150
03	.452	.643	.411	.356	.906,-1
04	.453	.535	.419	.361	.121
05	.477	.604	.419	.365	.127
06	.472	.599	.426	.363	.142
07	.464	.589	.406	.332	.154
08	.457	.626	.399	.352	.111
09	.468	.621	.421	.351	.966,-1
10	.470	.612	.424	.368	.966,-1
11	.490	.609	.448	.346	.140
12	.499	.609	.456	.348	.102
13	.494	.604	.453	.373	.983,-1
14	.470	.595	.478	.353	.819,-1
15	.457	.587	.453	.356	.850,-1
16	.443	.580	.429	.339	.713,-1
17	.463	.580	.426	.398	.130
18	.464	.590	.414	.389	.174
19	.480	.580	.424	.358	.104
20	.484	.578	.411	.394	.868,-1
21	.468	.592	.446	.382	.409,-1
22	.470	.592	.440	.400	.562,-1
23	.453	.585	.424	.373	.991,-1
24	.433	.587	.426	.348	.144
25	.435	.579	.409	.353	.105
26	.447	.590	.424	.365	.509,-1
27	.424	.595	.426	.346	.438,-1
28	.424	.580	.429	.344	.470,-1
29	.426	.595	.377	.308	.836,-1
30	.475	.578	.389	.339	.709,-1
31	.488	.568	.416	.334	.854,-1
32	.475	.563	.416	.351	.855,-1
33	.461	.570	.426	.349	.501,-1
34	.459	.568	.411	.319	.727,-1
35	.461	.561	.407	.351	.112
36	.490	.580	.409	.371	.138
37	.479	.587	.399	.353	.991,-1
38	.428	.580	.399	.354	.521,-1
39	.424	.568	.409	.302	.387,-1
40	.450	.566	.409	.303	.588,-1
41	.431	.559	.394	.339	.717,-1
42	.424	.546	.397	.351	.127
43	.457	.568	.379	.341	.129
44	.455	.568	.384	.329	.754,-1
45	.461	.580	.409	.356	.117
46	.464	.561	.401	.337	.726,-1
47	.444	.566	.399	.334	.124
48	.431	.563	.382	.310	.125
49	.442	.580	.409	.291	.133
50	.453	.570	.399	.290	.105
51	.461	.573	.374	.305	.109
52	.450	.556	.389	.293	.110
53	.455	.568	.387	.344	.149
54	.441	.555	.382	.375	.111
55	.441	.534	.394	.300	.321,-1
56	.461	.539	.379	.313	.695,-1
57	.470	.573	.352	.308	.574,-1
58	.444	.568	.384	.298	.880,-1
59	.411	.539	.389	.288	.872,-1
60	.430	.536	.360	.274	.114

Run No. 50; w component

	Anemometer Position Number				
K	1	2	3	4	5
00	1.000	1.000	1.000	1.000	1.000
01	.103	.140	.125	.127	.259
02	.566,-2	.547,-1	.129,-1	.467,-1	.677,-1
03	-.310,-1	-.221,-2	-.660,-2	-.153,-1	-.659,-2
04	-.571,-1	-.524,-1	.253,-1	-.130,-1	.505,-1
05	-.113,-2	-.047,-1	-.120,-1	.418,-1	.498,-1
06	.262,-1	-.317,-1	.566,-1	.164,-1	.090,-1
07	-.406,-1	.163,-1	.122	-.241,-2	-.342,-2
08	.150,-1	.381,-1	.739,-1	.115,-1	.187,-1
09	.134,-1	.261,-1	.140,-2	-.861,-2	.375,-1
10	.464,-2	.162,-1	-.169,-1	-.142,-1	.476,-1
11	.305,-1	.135,-1	.405,-1	-.406,-1	.109,-1
12	.147,-1	.443,-1	.577,-1	-.553,-1	-.506,-1
13	.621,-1	-.129,-1	.192,-1	.737,-1	-.383,-2
14	.327,-1	-.603,-1	.799,-2	.186,-1	-.799,-2
15	.193,-1	.211,-2	-.243,-1	.136,-1	.692,-1
16	-.278,-1	-.425,-1	.201,-1	.171,-1	-.208,-2
17	-.330,-1	.374,-1	.118,-1	.524,-1	-.494,-1
18	-.137,-1	.170,-3	.507,-1	.450,-1	-.353,-1
19	-.808,-2	.437,-1	.493,-1	.515,-1	.321,-2
20	.159,-1	-.115,-1	.675,-1	-.278,-1	-.554,-1
21	.335,-2	.425,-1	.194,-1	-.215,-1	-.252,-1
22	.447,-1	-.110,-1	-.493,-1	.270,-2	.230,-1
23	-.197,-2	-.400,-1	.501,-1	.584,-2	.650,-1
24	.256,-1	-.434,-1	.147,-1	.410,-1	.234,-1
25	.216,-1	-.415,-1	.266,-1	-.366,-1	-.558,-1
26	.442,-1	-.390,-1	.191,-1	-.171,-1	-.287,-1
27	.556,-1	-.382,-2	.561,-1	-.891,-1	.840,-2
28	.369,-2	.522,-1	.300,-3	-.316,-1	.490,-1
29	-.604,-1	.313,-2	.153,-1	-.190,-1	.672,-1
30	.502,-2	.353,-1	.480,-1	-.267,-1	.197,-1
31	-.129,-1	.596,-1	.284,-1	-.507,-1	.348,-1
32	.263,-1	.206,-1	-.159,-1	-.159,-2	.231,-1
33	.107	.314,-1	-.101,-2	-.612,-1	.503,-1
34	.495,-1	.148,-1	.555,-1	-.332,-1	.491,-1
35	.221,-1	.954,-3	-.400,-2	.697,-2	.193,-2
36	.547,-2	.517,-1	-.269,-1	-.300,-1	.490,-1
37	-.358,-1	.347,-1	.643,-1	.721,-2	.216,-1
38	.619,-2	.125,-1	.410,-1	.219,-1	.223,-1
39	-.179,-1	.863,-2	.186,-1	.230,-1	.487,-1
40	.555,-1	-.552,-2	-.372,-1	.290,-1	.187,-1
41	.398,-1	-.558,-2	.444,-2	-.224,-1	-.458,-2
42	.435,-1	.432,-1	.834,-3	-.430,-1	.396,-1
43	.676,-2	.132,-1	.533,-1	.122,-1	.801,-2
44	.316,-1	.519,-1	.452,-1	-.329,-1	.782,-2
45	-.232,-1	-.603,-1	.319,-1	-.392,-1	.189,-1
46	.217,-1	-.715,-1	-.139,-1	-.582,-1	.300,-1
47	.852,-1	-.240,-1	-.202,-2	-.256,-1	-.419,-1
48	.720,-2	.568,-1	-.243,-1	-.182,-1	-.219,-1
49	-.529,-1	.123,-1	-.374,-1	-.307,-1	-.731,-2
50	.907,-2	.695,-1	.199,-1	-.381,-2	.101,-1
51	.107,-1	-.554,-1	.442,-1	-.371,-1	-.244,-1
52	.220,-1	-.420,-1	-.206,-1	-.518,-1	-.275,-1
53	.299,-1	-.775,-2	.155,-1	-.104,-1	-.209,-1
54	.199,-1	-.139,-1	.537,-1	-.319,-1	-.283,-2
55	-.538,-2	-.202,-1	-.868,-2	-.759,-1	.487,-2
56	.526,-1	-.402,-1	.475,-2	-.210,-1	-.457,-2
57	.635,-2	-.406,-1	.396,-1	.544,-1	.309,-1
58	-.335,-1	-.622,-1	-.596,-2	.565,-1	.384,-1
59	-.242,-1	.501,-2	-.171,-1	.545,-1	.180,-1
60	.857,-2	.240,-1	-.325,-1	-.158,-1	-.571,-1

Run No. 37; u component

K	Anemometer Position Number 1	2	3	4	5
00	1.000	1.000	1.000	1.000	1.000
01	.733	.698	.735	.735	.717
02	.575	.507	.529	.545	.561
03	.466	.416	.462	.415	.464
04	.359	.359	.389	.340	.373
05	.305	.298	.227	.289	.296
06	.241	.257	.199	.230	.249
07	.191	.223	.155	.179	.204
08	.154	.175	.117	.164	.193
09	.135	.148	.917,-1	.131	.106
10	.120	.141	.895,-1	.103	-.651,-1
11	.983,-1	.134	.830,-1	.959,-1	-.365,-1
12	.961,-1	.126	.821,-1	.971,-1	-.604,-1
13	.894,-1	.118	.839,-1	.761,-1	-.229,-1
14	.780,-1	.700,-1	.590,-1	.591,-1	-.596,-1
15	.536,-1	.361,-1	.359,-1	.392,-1	-.135,-1
16	.136,-1	-.420,-2	-.245,-2	.183,-1	-.685,-1
17	-.161,-1	-.171,-1	-.240,-1	.205,-1	-.952,-1
18	-.540,-1	-.304,-1	-.270,-1	.183,-1	-.106
19	-.835,-1	-.523,-1	-.337,-1	.969,-3	-.104
20	-.778,-1	-.508,-1	-.244,-1	-.427,-1	-.121
21	-.507,-1	-.654,-1	-.195,-1	-.629,-1	-.110
22	-.270,-1	-.740,-1	.895,-3	-.438,-1	-.104
23	-.902,-2	-.434,-1	.104, 1	-.203,-1	-.296,-1
24	-.737,-3	-.252,-1	.182,-1	-.290,-1	-.248,-1
25	-.272,-1	-.321,-2	.240,-1	-.131,-1	-.372,-1
26	-.309,-1	-.155,-1	.249,-1	-.173,-1	-.371,-1
27	-.312,-1	-.205,-1	.199,-1	-.310,-1	-.494,-1
28	-.609,-1	-.370,-1	.123,-1	-.574,-1	-.576,-1
29	-.666,-1	-.245,-1	-.152,-1	-.815,-1	-.432,-1
30	-.757,-1	-.207,-1	-.564,-1	-.640,-1	-.107,-1
31	-.756,-1	-.172,-1	-.701,-1	-.718,-1	-.149,-1
32	-.774,-1	-.338,-1	-.595,-1	-.600,-1	-.197,-1
33	-.704,-1	-.184,-1	-.405,-1	-.113	-.255,-1
34	-.609,-1	-.126,-1	-.179,-1	-.106	-.158,-1
35	-.709,-1	-.455,-2	-.910,-2	-.927,-1	.101,-2
36	-.654,-1	.162,-1	-.919,-2	-.766,-1	.210,-1
37	-.443,-1	.448,-2	.980,-2	-.500,-1	.231,-1
38	-.244,-1	-.950,-2	.456,-1	-.290,-1	.281,-1
39	-.169,-1	-.557,-2	.916,-1	-.254,-1	.369,-1
40	-.273,-1	.171,-1	.491,-1	-.835,-2	.209,-1
41	-.445,-1	.232,-1	.462,-1	-.537,-2	.527,-2
42	-.391,-1	.632,-2	.501,-1	.183,-1	-.176,-2
43	-.433,-1	.348,-1	.549,-1	.343,-1	-.282,-1
44	-.327,-1	.327,-1	.447,-1	.443,-1	-.679,-1
45	-.115,-1	-.100,-2	.334,-1	.459,-1	-.109
46	.212,-1	-.131,-1	.263,-2	.517,-1	-.129
47	.502,-1	-.178,-1	-.927,-2	.863,-1	-.119
48	.787,-1	-.127,-1	-.342,-1	.950,-1	-.112
49	.628,-1	-.157,-1	-.497,-1	.893,-1	-.929,-1
50	.508,-1	-.227,-1	-.554,-1	.760,-1	-.768,-1
51	.524,-1	-.414,-1	-.780,-1	.809,-1	-.844,-1
52	.527,-1	-.496,-1	-.851,-1	.118	-.902,-1
53	.609,-1	-.530,-1	-.780,-1	.121	-.930,-1
54	.456,-1	-.539,-1	-.818,-1	.956,-1	-.928,-1
55	.309,-1	-.750,-1	-.830,-1	.700,-1	-.825,-1
56	.322,-1	-.800,-1	-.905,-1	.348,-1	-.574,-1
57	.178,-1	-.895,-1	-.943,-1	.242,-2	-.250,-1
58	.241,-1	-.560,-1	-.758,-1	-.828,-2	-.230,-1
59	.217,-2	-.523,-1	-.569,-1	-.959,-3	-.250,-1
60	-.164,-2	-.534,-1	-.559,-1	.225,-1	-.257,-1

Run No. 37: v component

K	Anemometer Position Number 1	2	3	4	5
00	1.000	1.000	1.000	1.000	1.000
01	.439	.359	.433	.491	.422
02	.299	.254	.298	.330	.261
03	.255	.207	.234	.242	.199
04	.197	.198	.207	.181	.217
05	.172	.235	.203	.163	.197
06	.153	.221	.191	.165	.161
07	.970,-1	.210	.174	.195	.192
08	.115	.131	.181	.204	.127
09	.137	.197	.202	.182	.117
10	.110	.153	.202	.166	.144
11	.123	.165	.163	.146	.140
12	.142	.175	.157	.146	.172
13	.995,-1	.174	.145	.151	.135
14	.109	.164	.176	.159	.111
15	.130	.147	.144	.141	.118
16	.881,-1	.112	.107	.146	.134
17	.122	.141	.105	.188	.130
18	.108	.146	.104	.218	.139
19	.162	.173	.130	.212	.212
20	.192	.157	.165	.194	.204
21	.189	.162	.154	.165	.174
22	.135	.170	.144	.178	.147
23	.160	.211	.126	.155	.176
24	.142	.191	.134	.154	.170
25	.129	.145	.122	.146	.151
26	.115	.160	.159	.181	.159
27	.148	.192	.172	.176	.176
28	.114	.129	.178	.154	.176
29	.146	.153	.200	.152	.197
30	.163	.155	.208	.155	.156
31	.151	.146	.219	.156	.195
32	.189	.188	.207	.101	.209
33	.186	.138	.196	.124	.203
34	.153	.159	.147	.172	.172
35	.161	.140	.146	.167	.178
36	.173	.138	.150	.189	.175
37	.155	.158	.152	.157	.153
38	.145	.176	.117	.170	.137
39	.136	.169	.156	.174	.169
40	.113	.137	.128	.129	.169
41	.987,-1	.160	.151	.109	.163
42	.113	.148	.147	.136	.161
43	.104	.132	.157	.152	.138
44	.110	.161	.145	.179	.170
45	.995,-1	.122	.170	.154	.160
46	.916,-1	.141	.171	.158	.165
47	.114	.151	.165	.190	.144
48	.140	.134	.154	.185	.138
49	.147	.160	.181	.134	.137
50	.129	.168	.189	.144	.157
51	.180	.164	.178	.132	.154
52	.174	.129	.186	.139	.135
53	.179	.162	.184	.163	.124
54	.153	.174	.199	.145	.111
55	.163	.155	.215	.152	.119
56	.184	.173	.191	.144	.153
57	.179	.134	.231	.129	.161
58	.199	.157	.202	.138	.188
59	.154	.160	.183	.164	.173
60	.150	.142	.203	.198	.185

Run No. 37; w component

K	Anemometer Position Number 1	2	3	4	5
00	1.000	1.000	1.000	1.000	1.000
01	.774,-1	.935,-1	.126	.617,-1	.801,-1
02	.609,-1	.712,-1	.864,-1	.570,-1	.819,-1
03	.383,-1	.564,-1	.611,-1	-.191,-2	.683,-1
04	.147,-2	.375,-1	.460,-1	.114,-1	.269,-1
05	.124,-1	.966,-2	-.239,-1	.175,-2	.431,-1
06	.127,-2	.258,-1	-.313,-1	-.375,-3	.177,-1
07	-.558,-1	.495,-1	-.774,-4	-.294,-1	-.872,-3
08	.344,-1	.277,-2	.420,-1	.446,-1	.320,-1
09	.800,-2	-.209,-1	-.108,-1	.141,-1	.244,-2
10	.263,-1	-.282,-1	.305,-2	-.390,-1	.225,-1
11	.130,-1	-.477,-1	-.530,-1	-.579,-1	-.289,-1
12	-.124,-1	-.276,-1	-.290,-1	-.598,-2	-.262,-1
13	.103,-2	.118,-1	-.313,-1	-.104,-1	-.192,-3
14	.752,-2	-.229,-1	-.207,-2	-.730,-2	-.185,-1
15	-.281,-1	.297,-2	-.502,-2	-.706,-1	-.913,-2
16	-.221,-1	.172,-1	-.228,-1	-.302,-1	-.200,-1
17	.109,-1	-.190,-2	.444,-2	-.102,-1	-.300,-1
18	-.240,-2	-.147,-2	.472,-1	-.228,-3	-.313,-1
19	.178,-2	.544,-1	.379,-2	-.344,-2	.645,-2
20	.176,-1	.199,-1	-.274,-1	.822,-3	-.487,-3
21	.416,-1	-.564,-2	.211,-1	-.617,-2	-.152,-1
22	-.122,-1	-.393,-1	.505,-1	.126,-1	.462,-1
23	.308,-1	-.847,-2	.112,-1	.263,-1	.188,-1
24	.911,-2	-.331,-1	.690,-2	.130,-1	.894,-1
25	-.442,-1	.115,-1	.472,-1	.603,-1	.492,-1
26	-.154,-2	.172,-1	.130,-1	.110,-1	-.241,-1
27	-.151,-1	-.719,-1	.180,-1	.720,-2	.281,-1
28	-.173,-1	.10[illegible],-1	.231,-1	-.224,-1	.673,-2
29	.953,-2	.243,-1	-.109,-1	.500,-1	-.549,-2
30	.168,-2	-.552,-1	-.519,-2	.170,-1	.540,-2
31	.163,-1	-.346,-1	.730,-2	.447,-1	.256,-1
32	.611,-2	.244,-1	.221,-2	-.151,-1	.549,-2
33	.621,-1	.952,-2	-.345,-1	-.681,-1	-.217,-1
34	.684,-1	-.169,-2	-.200,-1	.172,-2	.185,-1
35	-.162,-1	-.139,-2	.521,-1	-.631,-1	.561,-2
36	.466,-1	-.136,-2	-.351,-1	-.346,-1	-.560,-3
37	.532,-1	-.839,-2	-.450,-2	.219,-1	.304,-1
38	.153,-1	-.190,-1	-.470,-1	.417,-2	-.296,-1
39	.568,-1	.903,-1	.640,-2	.142,-1	.436,-1
40	.376,-1	-.911,-2	-.179,-1	.852,-2	.537,-1
41	.194,-1	.296,-1	-.237,-1	-.118,-1	-.144,-1
42	-.138,-2	.394,-1	.238,-1	.336,-1	.269,-1
43	.921,-2	-.296,-1	.426,-1	.180,-1	-.119,-1
44	.199,-1	.358,-1	.249,-1	-.207,-1	-.170,-2
45	.325,-1	-.198,-1	.467,-1	.197,-1	-.217,-2
46	-.144,-1	-.314,-1	.270,-1	.187,-1	-.256,-1
47	-.125,-1	-.404,-1	-.347,-1	-.054,-2	-.215,-1
48	.179,-1	-.240,-1	-.138,-1	.967,-2	-.707,-2
49	-.251,-1	.330,-1	.301,-1	-.860,-2	.219,-1
50	-.789,-2	-.441,-1	.156,-1	-.274,-1	.963,-2
51	-.395,-2	-.271,-2	-.473,-1	-.589,-2	-.142,-1
52	-.211,-1	-.119,-1	.263,-1	.225,-2	.359,-1
53	.314,-1	-.255,-1	-.281,-1	-.351,-1	-.216,-1
54	-.254,-1	.263,-1	-.838,-1	-.233,-1	-.210,-1
55	-.579,-1	.108,-1	-.419,-1	-.593,-1	-.172,-1
56	.104,-1	.272,-1	.223,-1	.626,-1	-.498,-2
57	-.183,-2	.447,-1	.129,-1	-.178,-2	-.199,-1
58	.344,-1	.165,-1	.247,-1	.193,-1	-.403,-2
59	.132,-1	.323,-1	-.337,-1	-.139,-1	-.430,-1
60	-.304,-1	.120,-1	-.342,-2	.280,-1	-.674,-1

Run No. 38; u component

K	Anemometer Position Number 1	2	3	4	5
00	1.000	1.000	1.000	1.000	1.000
01	.742	.728	.732	.707	.733
02	.580	.524	.568	.564	.545
03	.479	.428	.454	.448	.429
04	.406	.383	.409	.338	.350
05	.368	.343	.368	.865	.285
06	.335	.307	.318	.284	.234
07	.285	.252	.282	.246	.215
08	.245	.195	.236	.197	.209
09	.212	.183	.202	.170	.180
10	.186	.167	.178	.159	.206
11	.172	.144	.158	.153	.236
12	.167	.113	.161	.189	.218
13	.154	.114	.161	.166	.195
14	.147	.107	.146	.144	.181
15	.129	.910,-1	.155	.106	.162
16	.120	.728,-1	.130	.821,-1	.153
17	.110	.686,-1	.154	.619,-1	.122
18	.825,-1	.602,-1	.161	.718,-1	.807,-1
19	.916,-1	.678,-1	.151	.988,-1	.507,-1
20	.104	.795,-1	.152	.104	.364,-1
21	.800,-1	.695,-1	.144	.101	.414,-1
22	.687,-1	.783,-1	.134	.679,-1	.432,-1
23	.422,-1	.910,-1	.133	.547,-1	.350,-1
24	.144,-1	.119	.121	.541,-1	.285,-1
25	.158,-2	.143	.135	.554,-1	.111,-1
26	-.353,-2	.157	.142	.527,-1	-.113,-1
27	-.185,-2	.162	.148	.345,-1	-.170,-1
28	.695,-2	.143	.152	.376,-1	-.364,-1
29	.645,-2	.127	.137	.430,-1	-.309,-1
30	.858,-2	.115	.126	.356,-1	-.313,-1
31	-.124,-1	.108	.120	.240,-1	-.256,-1
32	.256,-2	.855,-1	.125	.277,-1	-.113,-1
33	-.189,-2	.567,-1	.145	.196,-1	-.202,-1
34	-.271,-1	.457,-1	.163	-.965,-2	-.342,-1
35	-.266,-1	.305,-1	.145	-.305,-1	-.436,-1
36	-.305,-1	.391,-1	.114	-.522,-1	-.405,-1
37	-.218,-1	.195,-1	.108	-.465,-1	-.474,-1
38	.606,-3	.626,-2	.118	-.324,-1	-.589,-1
39	.246,-1	-.166,-1	.126	-.239,-1	-.741,-1
40	.551,-1	-.153,-1	.158	-.186,-1	-.582,-1
41	.685,-1	-.102,-1	.135	-.105,-1	-.604,-1
42	.715,-1	-.171,-1	.144	-.345,-1	-.518,-1
43	.459,-1	-.376,-1	.140	-.505,-1	-.669,-1
44	.391,-1	-.722,-1	.144	-.451,-1	-.621,-1
45	.746,-1	-.767,-1	.134	-.457,-1	-.496,-1
46	.782,-1	-.979,-1	.137	-.667,-1	-.414,-1
47	.806,-1	-.874,-1	.128	-.862,-1	-.676,-1
48	.858,-1	-.997,-1	.111	-.914,-1	-.839,-1
49	.984,-1	-.108	.945,-1	-.705,-1	-.101
50	.911,-1	-.123	.900,-1	-.567,-1	-.884,-1
51	.110	-.108	.869,-1	-.485,-1	-.876,-1
52	.131	-.124	.473,-1	-.291,-1	-.786,-1
53	.138	-.128	.624,-2	.196,-2	-.661,-1
54	.148	-.118	-.324,-1	.250,-1	-.515,-1
55	.146	-.101	-.449,-1	.129,-1	-.486,-1
56	.142	-.764,-1	-.311,-1	.746,-2	-.424,-1
57	.140	-.693,-1	-.425,-1	-.105,-1	-.283,-1
58	.127	-.659,-1	-.723,-1	-.248,-1	-.176,-1
59	.142	-.986,-1	-.107	-.307,-1	-.241,-1
60	.142	-.919,-1	-.125	-.380,-1	-.728,-1

Run No. 38; v component

K	Anemometer Position Number 1	2	3	4	5
00	1.000	1.000	1.000	1.000	1.000
01	.241	.342	.306	.340	.327
02	.111	.107	.116	.172	.180
03	.458,-1	.104	.365,-1	.100	.111
04	.243,-1	.725,-1	.524,-1	.527,-1	.622,-1
05	-.359,-2	.532,-1	.123,-1	.438,-1	.116,-2
06	.122,-1	.106,-1	.813,-2	.405,-1	.168,-1
07	.956,-2	.509,-1	.821,-1	.259,-1	.318,-1
08	.349,-1	.145,-2	.573,-1	.102,-1	.428,-1
09	.437,-2	.250,-1	-.878,-2	.302,-1	.667,-1
10	-.106,-1	.445,-1	.101,-1	-.224,-1	.340,-1
11	-.390,-2	.688,-1	.439,-1	-.102,-1	.523,-1
12	-.512,-2	.205,-1	.254,-1	-.321,-1	.404,-1
13	-.168,-1	-.157,-1	-.203,-1	-.550,-2	.500,-1
14	-.501,-1	-.598,-2	.374,-1	-.384,-1	.689,-1
15	-.227,-1	.211,-2	.333,-1	-.907,-1	.270,-1
16	.299,-1	.545,	.137,-3	-.311,-1	.164,-1
17	-.290,-1	.446,-2	-.145,-1	.884,-3	-.274,-2
18	.316,-1	.559,-1	.287,-2	.193,-1	-.263,-2
19	-.441,-1	.622,-	-.227,-1	.389,-1	.464,-2
20	-.229,-2	.185,-1	-.467,-2	.125,-1	.231,-2
21	-.200,-1	.262,-1	.411,-1	.215,-2	.288,-1
22	-.556,-2	-.282,-1	.374,-1	.407,-1	.356,-1
23	-.678,-1	.189,-2	.837,-1	-.236,-2	.946,-1
24	.228,-1	-.286,-1	.379,-1	-.752,-2	.440,-1
25	.101,-1	-.264,-1	-.162,-1	.965,-2	.977,-1
26	-.258,-1	-.131,-1	.147,-2	.748,-1	.431,-1
27	.113,-1	.450,-2	.439,-3	.647,-1	.192,-1
28	.252,-2	.229,-1	.382,-1	.589,-1	-.189,-1
29	-.149	.725,-1	.941,-1	.155,-1	-.395,-1
30	.121,-1	.505,-3	.173,-1	.659,-1	.334,-2
31	.756,-1	.425,-1	-.561,-2	.202,-1	.447,-1
32	.647,-1	.166,-1	-.573,-1	.148,-2	.164,-1
33	.468,-1	.856,-2	-.254,-1	-.461,-2	.506,-2
34	-.269,-1	-.275,-1	.760,-2	-.690,-1	.407,-1
35	-.293,-1	-.155,-1	-.112,-1	-.461,-1	-.103,-1
36	-.256,-1	.396,-1	-.295,-1	-.551,-1	-.230,-1
37	-.142,-1	-.505,-2	-.225,-1	-.106,-1	-.329,-1
38	.333,-1	.779,-2	-.528,-2	.234,-1	-.964,-1
39	.471,-1	.518,-2	-.459,-1	.492,-2	-.959,-1
40	.238,-1	-.446,-1	-.391,-1	.152,-1	-.100,-1
41	-.112	-.423,-1	.336,-2	.165,-1	-.250,-1
42	.112,-1	-.486,-1	.126,-1	.558,-1	.212,-1
43	.631,-2	-.277,-1	.528,-1	.346,-1	.838,-2
44	.586,-2	.168,-2	.235,-1	.977,-1	.418,-2
45	-.207,-1	-.473,-3	.996,-2	.562,-1	.366,-1
46	-.488,-1	.185,-1	-.545,-1	.798,-1	.595,-1
47	.790,-2	.604,-2	-.939,-2	.119	.341,-1
48	-.298,-2	.129,-1	-.346,-1	.787,-1	.332,-1
49	.573,-2	.468,-2	-.190,-2	.519,-1	.622,-1
50	.373,-2	-.486,-1	-.545,-2	.151,-1	-.131,-1
51	.783,-1	-.384,-1	-.545,-1	.492,-1	-.136,-1
52	.400,-1	-.127,-1	-.207,-1	.372,-1	-.257,-1
53	-.258,-2	-.968,-2	-.809,-2	.112,-1	.247,-1
54	.236,-1	-.305,-1	.307,-1	.200,-1	.284,-1
55	.210,-1	.292,-1	.339,-1	.296,-1	.265,-1
56	-.553,-2	-.397,-1	-.565,-1	-.632,-2	.649,-1
57	-.495,-1	-.725,-1	-.533,-1	-.355,-1	.707,-1
58	.776,-4	-.509,-1	-.419,-1	-.290,-1	.613,-1
59	.221,-1	-.253,-1	.267,-3	-.105,-1	-.275,-1
60	.248,-2	.221,-1	.364,-1	.391,-3	-.414,-1

Run No. 38; w component

K	Anemometer Position Number 1	2	3	4	5
00	1.000	1.000	1.000	1.000	1.000
01	.114	.716,-1	.168	.132	.120
02	.632,-1	.492,-1	.101,-1	.245,-1	.872,-1
03	.429,-1	.380,-1	.443,-3	.343,-1	.659,-1
04	.830,-1	.636,-1	.392,-1	.665,-2	.329,-1
05	.110,-1	.729,-1	.585,-1	-.508,-1	-.557,-2
06	.879,-1	.522,-1	.305,-1	.345,-1	-.550,-2
07	.374,-1	.151,-1	.361,-1	.282,-1	-.337,-1
08	.274,-1	.406,-1	.239,-1	.101,-1	-.176,-1
09	.215,-1	-.597,-2	.317,-1	-.133,-1	.110,-1
10	.304,-1	-.100,-1	.522,-2	.308,-1	.698,-1
11	.205,-1	.206,-1	-.696,-2	.190,-1	.818,-2
12	-.372,-2	.777,-2	.187,-1	.268,-1	.260,-1
13	-.440,-1	-.117,-1	.157,-1	-.153,-1	.790,-1
14	.133,-1	-.460,-1	-.123,-2	-.178,-1	.577,-1
15	-.251,-1	.684,-3	-.185,-1	-.345,-3	.629,-1
16	.464,-1	.242,-2	-.510,-2	.106,-1	.695,-2
17	-.676,-1	-.138,-1	-.117,-1	.132,-1	.574,-1
18	-.225,-1	-.254,-1	-.394,-2	.972,-3	.136,-1
19	.129,-1	-.489,-1	-.421,-1	.352,-1	.250,-1
20	.386,-1	-.317,-2	.113,-1	-.109,-1	-.141,-1
21	-.125,-1	.379,-1	.252,-2	.994,-2	-.489,-2
22	.659,-1	-.141,-1	-.117,-1	.597,-1	-.505,-1
23	-.566,-2	-.140,-1	-.769,-2	-.471,-2	-.471,-2
24	.355,-1	-.214,-1	-.874,-2	-.494,-1	-.518,-2
25	-.297,-1	.493,-1	.513,-1	.648,-2	.502,-1
26	-.559,-1	.311,-1	.601,-1	-.368,-1	-.530,-4
27	.185,-2	-.329,-1	-.417,-1	-.591,-1	.266,-2
28	.934,-2	-.209,-1	-.134,-1	.563,-1	-.130,-1
29	-.137,-1	-.480,-1	-.369,-1	.349,-1	-.186,-1
30	.403,-1	.420,-1	.313,-1	.705,-2	-.232,-1
31	.130,-1	-.835,-2	-.657,-2	.261,-1	-.143,-1
32	.108,-1	-.836,-1	-.921,-2	.493,-1	-.209,-1
33	.255,-1	-.365,-2	.336,-1	.682,-2	-.458,-1
34	-.223,-1	-.550,-1	.172,-1	.371,-1	-.411,-1
35	.599,-2	-.147,-1	.483,-1	.244,-1	-.324,-1
36	.121,-1	-.292,-1	-.165,-1	-.450,-1	-.439,-1
37	-.123,-1	-.479,-1	-.105	.964,-3	-.728,-1
38	-.451,-3	-.396,-1	-.147,-1	-.151,-1	-.611,-2
39	-.454,-1	-.735,-1	.236,-2	-.270,-2	-.400,-2
40	.162,-1	-.556,-1	-.150,-1	-.196,-1	-.567,-1
41	-.110,-1	.276,-1	-.115,-1	.317,-1	-.536,-1
42	-.577,-1	.195,-1	-.795,-2	-.164,-1	-.141,-1
43	-.292,-2	-.347,-1	.166,-1	-.103,-1	-.610,-2
44	.125,-2	-.604,-2	.232,-1	.591,-2	.946,-1
45	-.335,-1	.412,-2	.464,-1	.989,-2	-.334,-1
46	-.471,-2	-.490,-1	.157,-1	-.170,-1	-.704,-1
47	-.507,-1	-.227,-2	.183,-1	-.659,-2	-.221,-1
48	-.387,-1	.370,-2	-.306,-1	-.563,-2	-.199,-1
49	.130,-1	.137,-1	.574,-1	-.196,-1	-.307,-1
50	.934,-2	.180,-1	-.106,-1	.710,-2	-.405,-1
51	-.362,-1	-.139,-2	.117,-1	-.172,-1	.121,-1
52	-.190,-1	.457,-2	.513,-1	-.246,-1	-.185,-1
53	.107,-1	-.527,-1	-.657,-2	.188,-1	.420,-2
54	.210,-2	.457,-1	-.711,-3	.230,-1	-.511,-2
55	.422,-3	-.650,-1	.143,-1	-.334,-1	.145,-1
56	-.230,-2	.404,-1	-.120,-1	-.216,-2	-.900,-2
57	-.243,-1	-.171,-1	.555,-2	-.173,-1	.693,-1
58	.178,-1	-.216,-1	.192,-1	-.344,-1	.211,-1
59	.141,-1	-.518,-1	.149,-1	-.591,-2	.305,-1
60	.261,-1	.228,-1	-.344,-1	.625,-2	.475,-2

Run No. 39; u component

K	Anemometer Position Number 1	2	3	4	5
00	1.000	1.000	1.000	1.000	1.000
01	.935	.920	.933	.930	.927
02	.889	.879	.894	.892	.881
03	.871	.855	.876	.868	.861
04	.860	.844	.868	.843	.846
05	.857	.841	.863	.843	.834
06	.855	.838	.865	.849	.832
07	.851	.844	.860	.845	.823
08	.853	.841	.863	.847	.815
09	.855	.841	.860	.852	.813
10	.857	.838	.850	.849	.817
11	.862	.829	.847	.847	.817
12	.860	.826	.839	.838	.819
13	.853	.826	.839	.830	.817
14	.851	.820	.839	.825	.817
15	.860	.820	.839	.830	.813
16	.862	.820	.837	.830	.817
17	.855	.823	.834	.830	.823
18	.842	.817	.832	.821	.821
19	.831	.814	.829	.823	.815
20	.826	.817	.829	.823	.811
21	.822	.823	.829	.821	.807
22	.817	.826	.826	.819	.802
23	.817	.826	.821	.812	.802
24	.824	.826	.821	.806	.798
25	.829	.820	.816	.801	.798
26	.831	.826	.813	.799	.798
27	.842	.817	.806	.799	.796
28	.833	.803	.808	.801	.796
29	.829	.808	.808	.799	.796
30	.822	.811	.811	.795	.792
31	.815	.814	.801	.795	.790
32	.817	.805	.795	.788	.786
33	.817	.802	.801	.786	.780
34	.811	.802	.798	.779	.782
35	.811	.802	.795	.779	.786
36	.808	.802	.790	.777	.788
37	.804	.796	.788	.779	.788
38	.804	.799	.788	.786	.782
39	.806	.796	.790	.788	.778
40	.811	.785	.782	.790	.780
41	.815	.785	.777	.788	.784
42	.817	.782	.780	.779	.788
43	.817	.782	.788	.775	.794
44	.817	.788	.782	.771	.800
45	.804	.799	.780	.766	.802
46	.793	.802	.790	.762	.798
47	.791	.794	.777	.764	.796
48	.786	.785	.780	.764	.798
49	.782	.773	.777	.769	.796
50	.777	.770	.775	.769	.790
51	.780	.776	.777	.769	.780
52	.780	.776	.777	.766	.782
53	.782	.764	.780	.764	.788
54	.784	.758	.785	.764	.782
55	.784	.761	.769	.760	.778
56	.782	.755	.759	.753	.771
57	.780	.752	.759	.749	.767
58	.777	.752	.762	.751	.765
59	.775	.752	.764	.753	.765
60	.769	.749	.769	.749	.767

Run No. 39; v component

K	Anemometer Position Number 1	2	3	4	5
00	1.000	1.000	1.000	1.000	1.000
01	.807	.853	.917	.872	.739
02	.801	.824	.864	.812	.742
03	.777	.824	.864	.787	.725
04	.777	.824	.889	.789	.731
05	.777	.824	.864	.774	.743
06	.783	.831	.894	.767	.740
07	.771	.824	.889	.751	.733
08	.777	.824	.889	.759	.735
09	.777	.824	.889	.774	.717
10	.771	.824	.883	.774	.726
11	.777	.824	.886	.762	.716
12	.783	.824	.883	.767	.728
13	.777	.809	.883	.759	.740
14	.759	.824	.883	.746	.729
15	.771	.824	.883	.730	.733
16	.753	.816	.883	.740	.733
17	.777	.816	.883	.731	.714
18	.771	.816	.889	.728	.725
19	.777	.809	.883	.731	.724
20	.789	.816	.889	.725	.712
21	.765	.809	.883	.746	.717
22	.771	.801	.878	.750	.700
23	.771	.809	.867	.746	.699
24	.753	.816	.867	.752	.700
25	.747	.816	.878	.752	.716
26	.759	.809	.872	.751	.701
27	.753	.801	.872	.738	.705
28	.765	.794	.872	.738	.717
29	.759	.809	.872	.731	.722
30	.747	.801	.872	.752	.704
31	.759	.794	.872	.744	.698
32	.741	.794	.872	.746	.686
33	.759	.794	.872	.752	.695
34	.759	.779	.872	.740	.699
35	.759	.779	.867	.741	.685
36	.759	.801	.861	.732	.674
37	.765	.794	.861	.732	.673
38	.759	.794	.861	.726	.676
39	.747	.794	.861	.732	.691
40	.759	.787	.861	.726	.680
41	.759	.794	.861	.727	.677
42	.759	.787	.856	.721	.668
43	.759	.787	.856	.717	.680
44	.747	.787	.844	.714	.685
45	.747	.779	.850	.722	.676
46	.747	.779	.844	.724	.668
47	.741	.787	.844	.721	.677
48	.753	.794	.850	.726	.671
49	.747	.772	.850	.725	.680
50	.741	.757	.844	.712	.665
51	.741	.765	.839	.725	.675
52	.729	.765	.839	.726	.679
53	.747	.772	.844	.714	.672
54	.741	.765	.844	.723	.664
55	.753	.765	.839	.711	.666
56	.741	.757	.833	.711	.646
57	.741	.750	.828	.700	.659
58	.735	.757	.833	.697	.664
59	.735	.757	.839	.698	.652
60	.735	.743	.839	.700	.654

Run No. 39; w component

K	Anemometer Position Number 1	2	3	4	5
00	1.000	1.000	1.000	1.000	1.000
01	.149	.844,-1	.224,-1	.192	.844,-1
02	.115	-.419,-2	-.840,-1	.813,-1	.965,-1
03	.655,-1	.718,-1	-.408,-1	.596,-2	.378,-1
04	.110	-.181,-1	-.456,-1	.846,-2	-.431,-1
05	.316,-1	.227,-1	.170,-1	.226,-1	.256,-1
06	.484,-2	.929,-1	.479,-3	-.639,-2	.939,-2
07	.503,-1	.553,-2	.244,-1	-.467,-1	-.235,-1
08	.957,-1	.101	.342,-1	-.396,-1	.366,-1
09	.107	.208,-1	.424,-1	.471,-1	-.219,-1
10	.413,-1	.346,-1	-.383,-1	.771,-1	.457,-2
11	.543,-1	.250,-1	-.171,-2	.216,-1	-.399,-1
12	.108	.929,-1	-.114,-1	.639,-2	-.275,-1
13	.511,-1	.301,-1	-.144,-1	-.573,-2	.479,-1
14	.587,-1	.109	.635,-2	-.698,-1	.987,-2
15	.104	.308,-1	-.356,-1	-.577,-1	.240,-1
16	.991,-1	.447,-1	.152,-1	-.100	.438,-2
17	.843,-1	.847,-1	-.240,-2	-.174,-1	.582,-1
18	.758,-1	.819,-1	-.377,-1	-.537,-1	.591,-1
19	-.217,-1	-.149,-1	-.159,-1	.188,-1	.115,-1
20	.910,-1	.955,-1	-.534,-1	.186,-2	-.214,-1
21	-.374,-2	-.139,-1	.363,-1	.643,-2	-.565,-2
22	.587,-1	.711,-1	.393,-1	.167,-1	-.323,-1
23	.962,-2	.147,-1	.694,-2	.555,-1	-.274,-1
24	.915,-1	.132,-1	-.707,-1	.476,-2	-.175,-1
25	.431,-1	.602,-1	-.152,-1	.259,-1	-.782,-2
26	.312,-1	-.556,-3	.802,-1	.502,-1	.213,-1
27	.735,-1	.491,-1	.233,-1	-.380,-1	-.682,-1
28	.525,-2	.404,-1	.433,-1	-.273,-1	-.233,-1
29	.507,-1	.297,-1	-.434,-1	.258,-1	.536,-1
30	.780,-2	.982,-1	-.173,-1	.302,-1	-.870,-1
31	.301,-1	.297,-1	-.629,-2	.502,-1	.313,-1
32	.825,-1	.394,-1	.901,-1	.205,-1	-.591,-1
33	.650,-1	.332,-1	-.631,-1	.335,-1	-.359,-1
34	.367,-1	.938,-1	-.708,-1	-.301,-1	.975,-2
35	.207,-1	.548,-1	.260,-1	-.284,-1	-.281,-1
36	.516,-1	.667,-1	.809,-1	-.122,-1	-.115,-1
37	.275,-1	.490,-1	.169,-1	-.204,-1	-.253,-1
38	.552,-1	.475,-1	-.282,-1	-.263,-1	-.105
39	.230,-1	.197,-1	.228,-2	-.271,-1	-.235,-1
40	.286,-1	-.155,-1	.664,-2	-.314,-1	-.986,-1
41	.915,-1	.162,-1	-.589,-1	-.209,-1	-.470,-1
42	.655,-1	.946,-1	-.465,-1	-.211,-1	.414,-1
43	.511,-1	.333,-2	.113,-1	.350,-1	-.370,-1
44	.459,-1	.272,-1	.110,-1	-.241,-1	.467,-1
45	.294,-1	.112	.331,-2	-.136,-1	-.105,-1
46	.489,-1	-.135,-1	-.350,-1	.366,-1	-.489,-2
47	.677,-1	.497,-1	-.512,-1	.373,-2	.675,-1
48	.322,-1	.229,-1	.123,-1	.234,-1	-.156,-1
49	.762,-1	.121,-1	.124,-1	-.166,-1	.584,-2
50	.192,-1	.444,-1	-.638,-1	-.315,-1	.105,-1
51	.420,-1	.425,-1	.344,-1	.141,-1	-.651,-1
52	.374,-1	.460,-1	-.221,-1	.356,-1	-.292,-1
53	.677,-1	.571,-1	.460,-2	-.293,-1	-.396,-1
54	.588,-1	.554,-1	.519,-1	.731,-2	-.266,-1
55	.135,-1	.269,-1	-.236,-2	.353,-1	.235,-1
56	.111	.938,-2	-.924,-1	.434,-1	-.502,-1
57	.151,-1	.982,-1	-.365,-1	.643,-2	-.287,-1
58	.359,-1	-.246,-1	.954,-1	.145,-1	-.620,-1
59	.516,-1	-.623,-1	.598,-1	.140,-1	-.108,-1
60	.398,-1	.564,-1	.559,-1	-.103,-2	.191,-1

Run No. 41; u component

K	Anemometer Position Number 1	2	3	4	5
00	1.000	1.000	1.000	1.000	1.000
01	.617	.649	.625	.667	.521
02	.361	.439	.418	.425	.321
03	.274	.337	.319	.325	.217
04	.220	.321	.224	.267	.169
05	.172	.295	.172	.236	.158
06	.131	.271	.126	.175	.125
07	.861,-1	.246	.107	.123	.118
08	.356,-1	.234	.117	.828,-1	.119
09	.353,-1	.226	.112	.658,-1	.102
10	.576,-1	.222	.641,-1	.817,-1	.928,-1
11	.565,-1	.221	.117,-1	.794,-1	.906,-1
12	.399,-1	.215	.963,-2	.456,-1	.672,-1
13	.139,-1	.207	.286,-1	.308,-1	-.111,-1
14	.962,-3	.198	.180,-1	.642,-2	-.347,-1
15	-.590,-2	.201	.245,-1	.105,-1	.502,-2
16	.375,-2	.208	.492,-1	.251,-1	.158,-1
17	.519,-2	.184	.588,-1	.204,-1	-.411,-2
18	-.296,-1	.169	.697,-1	.246,-1	.114,-1
19	-.263,-1	.147	.579,-1	.542,-1	-.619,-2
20	-.120,-1	.134	.319,-1	.667,-1	.394,-2
21	.205,-2	.139	.471,-1	.797,-1	.947,-2
22	.440,-1	.123	.306,-1	.110	-.411,-1
23	.367,-1	.128	.238,-1	.118	-.274,-1
24	.459,-1	.138	.390,-2	.925,-1	-.523,-1
25	.595,-1	.147	.163,-1	.656,-1	-.323,-1
26	.421,-1	.157	.244,-1	.764,-1	-.943,-2
27	-.206,-2	.168	-.412,-2	.822,-1	-.136,-1
28	.603,-2	.159	-.131,-1	.892,-1	.783,-2
29	.492,-1	.128	.418,-2	.875,-1	.302,-1
30	.486,-1	.144	.191,-1	.116	.132,-1
31	.225,-1	.131	.242,-1	.149	.411,-1
32	.272,-1	.133	.322,-1	.118	.468,-1
33	.193,-1	.154	.492,-1	.101	.321,-1
34	.164,-1	.154	.536,-1	.814,-1	.187,-1
35	.168,-1	.168	.591,-1	.625,-1	-.406,-3
36	.644,-2	.160	.322,-1	.794,-1	.111,-1
37	.250,-1	.148	.350,-1	.106	.102,-1
38	.609,-1	.127	.222,-1	.114	-.181,-1
39	.104	.131	-.601,-2	.914,-1	-.630,-2
40	.107	.139	-.406,-1	.775,-1	-.120,-1
41	.785,-1	.156	-.762,-1	.104	.602,-2
42	.630,-1	.148	-.616,-1	.102	-.766,-2
43	.421,-1	.134	-.594,-1	.119	-.226,-1
44	.173,-1	.997,-1	-.486,-1	.112	-.785,-2
45	.145,-1	.591,-1	-.362,-1	.117	-.594,-2
46	.102,-1	.500,-1	-.372,-1	.134	-.281,-1
47	-.467,-1	.801,-1	-.128,-1	.129	-.362,-2
48	-.592,-1	.100	.889,-2	.131	-.340,-1
49	-.370,-1	.105	.128,-1	.146	-.226,-1
50	-.129,-1	.845,-1	.117,-1	.144	-.306,-1
51	.457,-1	.804,-1	.200,-1	.114	-.304,-1
52	.530,-1	.432,-1	.263,-1	.119	-.549,-1
53	.367,-1	.240,-1	.250,-1	.126	-.197,-1
54	.370,-1	.483,-1	.252,-1	.115	-.332,-2
55	.736,-1	.713,-1	.433,-1	.102	.355,-1
56	.788,-1	.750,-1	.601,-1	.703,-1	.334,-1
57	.516,-1	.733,-1	.495,-1	.653,-1	.387,-1
58	.563,-2	.686,-1	.498,-1	.714,-1	.457,-1
59	.280,-2	.730,-1	.464,-1	.850,-1	.417,-2
60	.262,-1	.845,-1	.687,-1	.116	.632,-3

Run No. 41: v component

K	Anemometer Position Number 1	2	3	4	5
00	1.000	1.000	1.000	1.000	1.000
01	.208	.181	.152	.226	.179
02	.225,-1	.502,-1	.222,-1	.110	.770,-1
03	.052,-1	-.795,-2	.719,-1	.555,-1	.791,-1
04	.398,-1	.192,-1	.102,-1	.899,-1	.736,-1
05	.586,-1	.243,-1	.568,-1	.239,-1	.731,-1
06	.162,-1	.776,-1	-.106,-1	.136,-1	.487,-1
07	-.155,-1	.698,-1	-.544,-2	.590,-1	-.228,-1
08	.556,-2	.958,-1	.687,-1	.130,-1	-.550,-1
09	.409,-1	.406,-1	.207,-1	.053,-1	-.251,-1
10	.451,-1	.400,-1	.133,-1	.430,-1	.216,-1
11	.256,-1	.108,-2	.589,-1	.605,-1	.838,-2
12	.551,-1	.395,-1	.439,-1	.685,-1	.676,-1
13	.518,-1	.295,-1	.780,-1	.668,-1	.351,-1
14	.447,-1	.470,-1	.504,-1	.597,-1	.238,-1
15	.569,-1	.582,-1	.644,-2	.468,-2	-.126,-1
16	.422,-1	.650,-2	.534,-1	.106	.527,-1
17	.207,-1	.598,-1	.186,-2	.745,-1	.279,-1
18	.413,-1	.550,-2	.227,-2	.772,-1	.440,-1
19	.329,-1	-.150,-3	.984,-1	.691,-1	.630,-1
20	.221,-1	.519,-1	.835,-1	.405,-1	.643,-1
21	.403,-1	.503,-1	.494,-1	.260,-1	.838,-1
22	.350,-1	.819,-1	.650,-1	.179,-1	.926,-1
23	.328,-1	.404,-1	.404,-1	.289,-1	.360,-1
24	.552,-1	-.130,-1	.672,-1	.554,-1	.236,-1
25	-.210,-1	.445,-1	.630,-1	.642,-1	.441,-1
26	-.520,-2	.504,-2	.129,-1	.462,-1	.576,-1
27	-.403,-4	.205,-1	.220,-1	.199,-1	.601,-1
28	.133,-1	.302,-1	.665,-1	.372,-1	.230,-1
29	.384,-1	.503,-1	.502,-1	.671,-1	.336,-1
30	.591,-1	.125	.381,-1	.323,-1	.797,-1
31	.404,-1	.404,-1	.258,-1	.893,-2	.268,-1
32	.613,-1	.430,-1	.213,-1	.913,-2	.973,-2
33	.724,-1	-.170,-1	.717,-1	.301,-1	.220,-1
34	.650,-2	.530,-1	.037,-2	.725,-1	.529,-1
35	.370,-1	.439,-1	.263,-1	.799,-1	.186,-1
36	.401,-1	.404,-1	.224,-1	.832,-1	-.123,-1
37	.906,-2	.481,-1	.186,-1	.321,-1	.229,-1
38	-.175,-1	.533,-1	.537,-1	.499,-1	.382,-1
39	-.250,-1	.378,-1	.353,-1	.387,-1	.316,-1
40	-.061,-2	.512,-1	.615,-1	.631,-1	.716,-1
41	.303,-1	.132,-1	.219,-2	.639,-1	.359,-1
42	.3 5,-1	.208,-3	.292,-1	.799,-1	.743,-1
43	.398,-1	-.214,-1	.571,-1	.328,-1	.557,-1
44	.219,-1	.959,-2	.346,-1	.651,-1	.441,-1
45	.198,-1	.342,-1	.609,-1	.377,-2	.119
46	.630,-2	.618,-2	.857,-1	.745,-1	.251,-1
47	.162,-1	.232,-1	.244,-1	.658,-1	-.945,-1
48	-.276,-2	.210,-1	.103,-1	.725,-1	.328,-1
49	.680,-2	-.850,-2	.463,-1	.792,-1	-.380,-1
50	.254,-1	-.975,-2	.356,-1	.103	.595,-2
51	-.155,-1	.235,-1	.768,-1	.103	.222,-1
52	.602,-1	.699,-2	.371,-1	.705,-1	.157,-1
53	.862,-1	.109,-1	-.456,-1	.711,-1	-.147,-2
54	.852,-1	.158,-2	.111,-1	.371,-1	.151,-1
55	.377,-1	-.153,-1	.472,-1	.203,-1	.543,-1
56	-.801,-2	.350,-1	.329,-1	-.115,-1	.490,-2
57	.602,-1	.643,-1	.439,-3	.107,-2	-.218,-3
58	.127,-1	.313,-1	-.198,-1	.451,-1	.490,-2
59	-.365,-1	.559,-1	-.188,-1	.580,-1	.299,-1
60	.163,-1	.502,-1	.337,-1	.140,-2	.324,-1

Run No. 41: v component

K	Anemometer Position Number 1	2	3	4	5
00	1.000	1.000	1.000	1.000	1.000
01	.613,-1	.781,-1	.105	.721,-1	.106
02	.224,-2	.563,-1	-.489,-2	.694,-1	.408,-1
03	-.516,-1	.249,-1	-.158,-1	.209,-1	.102,-1
04	.140,-1	.671,-1	-.433,-1	.647,-1	.157,-1
05	.124,-1	.521,-1	.158,-1	.492,-1	.397,-1
06	.314,-1	.839,-2	.550,-2	.248,-2	.255,-1
07	-.439,-2	.670,-1	.548,-2	-.139,-1	-.371,-1
08	-.116,-1	-.153,-1	.552,-2	.175,-1	-.496,-1
09	-.391,-1	-.304,-1	-.247,-2	.665,-2	.279,-2
10	.839,-1	-.692,-2	.289,-1	.259,-1	.303,-1
11	-.101,-1	.477,-2	.578,-2	.544,-3	.203,-1
12	-.931,-3	.300,-1	.370,-3	-.273,-2	.456,-1
13	-.360,-1	.493,-2	.258,-1	.223,-1	-.257,-1
14	.342,-1	.130,-1	.435,-1	.107,-1	.486,-1
15	.403,-1	-.267,-1	.462,-2	.229,-1	.501,-1
16	.274,-1	-.700,-1	.489,-3	-.121,-1	.253,-1
17	.219,-2	-.224,-1	-.280,-1	-.113,-1	-.905,-1
18	-.500,-1	-.223,-1	-.506,-1	.180,-1	.200,-1
19	-.361,-1	-.114,-1	-.499,-1	-.144,-1	.198,-1
20	-.144,-1	-.144,-1	-.255,-1	-.164,-1	.800,-2
21	-.913,-2	-.542,-2	.908,-1	.395,-1	-.515,-1
22	.452,-1	-.512,-1	.155,-1	.089,-1	.570,-2
23	-.382,-1	-.359,-1	-.233,-2	.380,-1	.640,-2
24	-.355,-1	.301,-1	-.319,-2	.450,-1	-.639,-1
25	.421,-2	.286,-1	-.209,-1	.315,-1	-.631,-1
26	.454,-1	.391,-1	-.491,-1	.155,-1	.825,-3
27	.209,-1	.112,-1	-.245,-1	.153,-1	.699,-2
28	-.297,-1	.490,-1	.330,-1	.860,-2	.281,-1
29	.306,-1	-.464,-1	-.297,-2	.232,-1	.507,-1
30	-.518,-1	.161,-1	-.665,-1	.474,-1	-.673,-2
31	-.374,-1	-.420,-2	-.596,-1	.694,-1	-.794,-2
32	.209,-1	-.911,-2	-.130,-1	.581,-1	.580,-1
33	-.386,-1	.561,-2	-.442,-1	.542,-1	-.149,-1
34	-.251,-1	-.113,-1	.141,-2	.303,-1	.155,-2
35	-.478,-1	.118,-1	.144,-1	-.642,-2	-.403,-1
36	-.641,-1	-.186,-1	.125,-1	.517,-1	-.148,-1
37	.296,-1	-.189,-1	.776,-1	.368,-1	-.288,-1
38	-.754,-2	-.137,-1	.275,-1	.199,-1	-.392,-1
39	.178,-2	-.238,-1	-.225,-1	-.567,-2	.405,-1
40	-.138,-1	.138,-1	.134,-1	-.128,-1	-.420,-2
41	-.311,-1	.281,-1	-.194,-1	.503,-1	.543,-1
42	-.491,-1	.297,-1	.725,-3	.309,-1	.704,-3
43	-.101,-1	.324,-1	-.366,-1	.293,-1	.279,-1
44	-.172,-1	-.440,-1	.203,-1	.511,-1	.406,-1
45	-.583,-2	-.127,-1	-.775,-2	.408,-1	.426,-1
46	-.154,-1	-.403,-2	-.112,-1	.833,-1	.518,-1
47	-.129,-1	.423,-1	-.791,-2	.194,-1	.501,-1
48	.236,-1	.580,-2	.188,-1	.707,-2	-.172,-1
49	-.632,-2	-.229,-1	.244,-1	.149,-1	.967,-2
50	-.520,-1	-.415,-3	-.402,-2	-.262,-2	.470,-1
51	.485,-1	-.456,-1	-.355,-2	-.480,-2	.209,-1
52	-.232,-1	.131,-1	-.809,-2	.111,-1	.169,-1
53	.172,-1	-.394,-1	-.355,-1	-.705,-1	-.206,-1
54	-.886,-2	-.358,-1	-.147,-1	.310,-1	.535,-1
55	.163,-1	.797,-2	-.106,-1	.118,-1	.279,-2
56	.208,-1	-.286,-1	.207,-1	-.707,-2	.403,-1
57	-.281,-1	-.134,-1	.459,-1	.633,-2	.428,-1
58	-.672,-2	-.335,-1	.250,-1	-.482,-1	-.336,-1
59	.776,-1	-.237,-1	.329,-1	.307,-1	.572,-1
60	.109,-1	.550,-2	.470,-1	-.994,-2	-.946,-2

Run No. 42; u component

	Anemometer Position Number				
K	1	2	3	4	5
00	1.000	1.000	1.000	1.000	1.000
01	.700	.746	.710	.730	.740
02	.528	.597	.538	.532	.591
03	.444	.506	.432	.419	.505
04	.368	.446	.337	.338	.445
05	.312	.391	.276	.281	.395
06	.259	.345	.230	.215	.356
07	.236	.307	.189	.167	.320
08	.200	.258	.163	.123	.274
09	.193	.239	.152	.752,-1	.232
10	.205	.207	.126	.607,-1	.186
11	.187	.183	.106	.559,-1	.140
12	.188	.157	.110	.445,-1	.107
13	.164	.133	.108	.244,-1	.993,-1
14	.137	.120	.114	-.315,-3	.106
15	.125	.108	.121	-.117,-1	.893,-1
16	.120	.116	.111	-.208,-1	.720,-1
17	.106	.113	.948,-1	-.233,-1	.663,-1
18	.887,-1	.111	.843,-1	-.665,-2	.543,-1
19	.922,-1	.123	.823,-1	.323,-2	.667,-2
20	.102	.132	.546,-1	.123,-1	.631,-1
21	.965,-1	.125	.132,-1	.226,-1	.576,-1
22	.814,-1	.108	.208,-1	.217,-1	.587,-1
23	.636,-1	.117	.451,-1	.112,-1	.740,-1
24	.625,-1	.103	.363,-1	.993,-2	.860,-1
25	.235,-1	.100	.264,-1	.716,-2	.807,-1
26	-.120,-1	.939,-1	.148,-1	.217,-1	.727,-1
27	-.132,-1	.783,-1	-.295,-2	.213,-1	.813,-1
28	-.113,-1	.814,-1	-.141,-1	.515,-2	.913,-1
29	-.831,-2	.789,-1	-.224,-1	.191,-1	.102
30	-.279,-1	.930,-1	-.150,-1	.223,-1	.107
31	-.633,-1	.818,-1	-.329,-1	.209,-1	.105
32	-.530,-1	.102	-.360,-1	.199,-1	.773,-1
33	-.471,-1	.118	-.545,-1	.993,-2	.800,-1
34	-.382,-1	.132	-.654,-1	.553,-2	.747,-1
35	-.355,-1	.135	-.638,-1	.210,-1	.505,-1
36	-.378,-1	.142	-.415,-1	.270,-1	.518,-1
37	-.403,-1	.140	-.214,-1	.353,-1	.587,-1
38	-.551,-1	.149	-.629,-2	.291,-1	.987,-1
39	-.354,-1	.129	.152,-1	.251,-1	.847,-1
40	-.323,-1	.109	.272,-1	.520,-1	.927,-1
41	.103,-1	.912,-1	.635,-1	.415,-1	.733,-1
42	.184,-2	.105	.771,-1	.101,-1	.720,-1
43	.137,-2	.125	.629,-1	.209,-1	.727,-1
44	.185,-1	.132	.417,-1	.230,-1	.793,-1
45	.235,-1	.130	.376,-1	.794,-2	.747,-1
46	.155,-1	.143	.107,-1	.872,-2	.913,-1
47	-.390,-2	.150	-.270,-1	.474,-2	.680,-1
48	-.204,-2	.158	-.666,-1	.154,-1	.740,-1
49	.174,-1	.140	-.675,-1	-.282,-2	.456,-1
50	.198,-1	.128	-.547,-1	-.113,-1	.395,-1
51	.385,-1	.135	-.350,-1	.123,-2	.591,-1
52	.492,-1	.142	-.241,-1	-.915,-2	.727,-1
53	.112,-1	.154	-.100,-1	.124,-1	.853,-1
54	-.145,-1	.132	.207,-1	.170,-1	.100
55	-.710,-2	.123	.317,-1	.150,-2	.125
56	.135,-2	.904,-1	.300,-1	-.221,-1	.100
57	.307,-1	.696,-1	.530,-1	-.528,-1	.987,-1
58	.390,-1	.625,-1	.677,-1	-.517,-1	.953,-1
59	.617,-1	.701,-1	.670,-1	-.621,-1	.707,-1
60	.913,-1	.575,-1	.675,-1	-.780,-1	.524,-1

Run No. 42; v component

K	Anemometer Position Number 1	2	3	4	5
00	1.000	1.000	1.000	1.000	1.000
01	.351	.378	.394	.436	.363
02	.307	.285	.257	.277	.286
03	.238	.258	.198	.202	.267
04	.202	.235	.228	.157	.224
05	.165	.239	.223	.932,-1	.184
06	.139	.231	.187	.121	.190
07	.147	.212	.117	.130	.187
08	.143	.161	.119	.952,-1	.139
09	.732,-1	.159	.869,-1	.810,-1	.118
10	.110	.160	.936,-1	.141	.110
11	.104	.138	.155	.139	.144
12	.883,-1	.114	.130	.814,-1	.110
13	.827,-1	.111	.135	.764,-1	.130
14	.149	.769,-1	.110	.900,-1	.129
15	.119	.503,-1	.825,-1	.742,-1	.131
16	.123	.107	.740,-1	.435,-1	.126
17	.111	.574,-1	.666,-1	.388,-1	.118
18	.109	.563,-1	.349,-1	.463,-1	.794,-1
19	.997,-1	.603,-1	.251,-1	.560,-1	.974,-1
20	.991,-1	.981,-1	-.150,-1	.444,-1	.133
21	.128	.108	-.225,-1	.744,-1	.641,-1
22	.109	.917,-1	-.111,-1	.431,-1	.774,-1
23	.936,-1	.696,-1	-.189,-1	.320,-1	.768,-1
24	.712,-1	.380,-1	-.606,-2	.222,-1	.815,-1
25	.782,-1	.674,-1	-.189,-2	-.258,-2	.806,-1
26	.659,-1	.559,-1	.402,-1	.508,-2	.800,-1
27	.555,-1	.626,-1	.134,-1	.254,-1	.712,-1
28	.801,-1	.802,-1	.521,-1	.236,-1	.769,-1
29	.692,-1	.890,-1	.511,-1	.782,-1	.100
30	.752,-1	.865,-1	.423,-1	.989,-1	.113
31	.723,-1	.426,-1	.564,-1	.748,-1	.100
32	.846,-1	.786,-1	.711,-1	.911,-1	.458,-1
33	.123	.850,-1	.566,-1	.450,-1	.690,-1
34	.116	.898,-1	.570,-1	.456,-1	.387,-1
35	.113	.819,-1	.540,-1	.574,-1	.267,-1
36	.958,-1	.104	.470,-1	.624,-1	.316,-1
37	.882,-1	.138	.809,-1	.848,-1	.471,-1
38	.888,-1	.136	.885,-1	.108	.690,-1
39	.997,-1	.115	.957,-1	.8[illegible],-1	.748,-1
40	.961,-1	.134	.100	.125	.806,-1
41	.111	.112	.940,-1	.866,-1	.585,-1
42	.751,-1	.863,-1	.104	.916,-1	.759,-1
43	.103	.767,-1	.110	.472,-1	.776,-1
44	.916,-1	.977,-1	.787,-1	.512,-1	.662,-1
45	.553,-1	.143	.106	-.190,-1	.604,-1
46	.868,-1	.118	.129	-.202,-1	.454,-1
47	.790,-1	.867,-1	.125	-.182,-2	.573,-1
48	.980,-1	.909,-1	.558,-1	.463,-1	.718,-1
49	.966,-1	.530,-1	.558,-1	.526,-1	.811,-1
50	.108 ,	.713,-1	.111	.453,-1	.359,-1
51	.545,-1	.493,-1	.813,-1	.789,-1	.968,-1
52	.126	.740,-1	.436,-1	.767,-1	.437,-1
53	.752,-1	.632,-1	.626,-1	.914,-1	.602,-1
54	.874,-1	.620,-1	.655,-1	.234,-1	.802,-1
55	.702,-1	.376,-1	.526,-1	.299,-1	.619,-1
56	.416,-1	.372,-1	.611,-1	.450,-3	.[illegible],-1
57	.874,-1	.636,-1	.681,-1	-.218,-1	.652,-1
58	.618,-1	.784,-1	.572,-1	.342,-1	.107
59	.514,-1	.674,-1	.394,-1	.637,-1	.115
60	.503,-1	.792,-1	.462,-1	.676,-1	.105

Run No. 42; w component

	Anemometer Position Number				
K	1	2	3	4	5
00	1.000	1.000	1.000	1.000	1.000
01	.820,-1	.814,-1	.352,-1	.926,-1	.140
02	.799,-1	.884,-1	.538,-1	.180,-1	.511,-1
03	.701,-1	.112,-1	.558,-1	.243,-1	-.290,-1
04	.191,-1	-.290,-2	-.396,-2	-.339,-2	-.234,-1
05	.117,-1	.415,-1	.189,-1	-.140,-1	.298,-1
06	.209,-1	-.212,-1	-.322,-1	.190,-1	-.707,-2
07	.512,-1	-.139,-1	.142,-1	.572,-1	-.137,-2
08	-.350,-1	.133,-1	-.871,-2	.556,-1	.174,-1
09	-.844,-2	.377,-1	-.454,-1	.109,-1	.398,-2
10	.672,-1	.441,-1	-.261,-1	.165,-1	.603,-2
11	-.680,-2	.500,-1	-.518,-2	-.521,-1	.184,-1
12	-.105,-1	-.508,-2	.215,-1	-.229,-1	-.629,-1
13	.560,-1	-.189,-1	-.688,-2	.525,-1	-.338,-1
14	.480,-1	.414,-1	-.109,-1	.176,-1	-.749,-2
15	.378,-1	.140,-1	.186,-1	-.521,-2	-.152,-1
16	.334,-2	-.297,-1	-.343,-1	.177,-2	.277,-1
17	.900,-2	.985,-2	.105,-1	.984,-2	.329,-1
18	-.274,-1	.135,-1	.189,-2	-.405,-1	-.104,-1
19	-.623,-1	.709,-1	-.446,-1	-.654,-1	-.125,-1
20	.119,-1	-.455,-1	-.218,-1	.367,-3	-.988,-2
21	-.280,-1	-.560,-1	-.189,-1	.107,-1	.280,-1
22	-.187,-1	.317,-2	.876,-1	-.178,-1	.940,-2
23	.459,-1	.513,-1	-.107,-1	.755,-1	-.158,-1
24	-.180,-1	.425,-1	.329,-1	-.377,-2	.300,-2
25	-.175,-1	.409,-1	-.671,-2	-.953,-3	-.340,-1
26	.404,-1	.246,-1	-.104,-1	-.229,-3	.641,-2
27	-.560,-2	-.447,-1	.250,-2	.386,-1	-.862,-2
28	.568,-2	.20 ,-1	-.446,-1	-.144,-1	.232,-1
29	-.873,-3	[illegible]	[illegible]	[illegible]	[illegible]
30	-.363,-2	-.673,-1	.215,-1	.252,-1	.162,-1
31	-.200,-1	.234,-1	.554,-2	-.393,-1	-.922,-2
32	.573,-1	-.643,-1	-.312,-1	-.335,-1	-.271,-1
33	-.282,-1	-.143,-1	.566,-1	.288,-1	.134,-1
34	-.212,-1	-.211,-2	.251,-1	.068,-2	-.317,-1
35	-.356,-1	.044,-2	-.161,-1	-.305,-2	-.333,-2
36	.180,-2	-.135,-1	-.110,-1	.247,-1	.140,-1
37	-.148,-1	.618,-1	-.259,-4	.409,-1	.219,-1
38	-.373,-1	-.683,-1	.209,-2	.576,-1	.477,-1
39	-.537,-1	-.618,-1	-.298,-1	-.365,-2	.240,-1
40	-.202,-1	-.274,-1	-.385,-1	-.163,-1	-.151,-1
41	.103,-1	-.297,-1	.175,-1	.521,-1	-.784,-1
42	-.766,-1	.714,-2	-.112,-1	-.447,-1	-.119,-1
43	.126,-1	-.345,-1	-.221,-1	.299,-1	.507,-2
44	.881,-2	-.362,-2	-.146,-1	.133,-1	.266,-1
45	-.300,-1	-.205,-1	-.578,-2	.267,-2	.451,-1
46	.170,-1	.423,-1	-.247,-1	.150,-1	.149,-1
47	-.260,-1	.814,-1	-.129,-2	-.808,-2	.213,-1
48	-.174,-1	.450,-1	-.199,-1	-.238,-1	.286,-1
49	.900,-2	.282,-1	-.667,-2	-.197,-1	-.418,-1
50	.209,-1	.284,-1	-.259,-2	.126,-1	-.820,-2
51	.639,-1	-.337,-1	-.359,-1	.178,-1	.262,-1
52	.845,-2	-.230,-1	.374,-1	.163,-1	.218,-1
53	-.312,-1	-.173,-1	.214,-1	.556,-1	.231,-2
54	-.318,-1	.533,-2	-.322,-1	.380,-1	-.208,-1
55	-.244,-1	-.187,-2	-.334,-1	.142,-1	.266,-1
56	-.397,-1	.257,-1	-.470,-1	.405,-1	-.255,-1
57	-.103,-1	-.257,-1	-.675,-1	-.809,-2	-.940,-2
58	-.193,-1	.405,-2	.122,-1	.424,-1	.217,-1
59	-.885,-2	.693,-1	.201,-1	.560,-1	.568,-1
60	.975,-2	.345,-1	.237,-1	.296,-1	-.178,-1

Run No. 43; u component

K	Anemometer Position Number 1	2	3	4	5
00	1.000	1.000	1.000	1.000	1.000
01	.843	.866	.860	.840	.822
02	701	.763	.753	.714	.710
03	.711	.705	.688	.634	.657
04	.667	.657	.632	.583	.621
05	.629	.619	.588	.541	.563
06	.613	.576	.561	.505	.509
07	.594	.547	.527	.484	.468
08	.577	.514	.504	.465	.435
09	.542	.485	.488	.439	.422
10	.510	.463	.480	.414	.411
11	.480	.445	.470	.409	.384
12	.451	.424	.450	.410	.375
13	.419	.393	.432	.414	.369
14	.387	.376	.408	.410	.359
15	.355	.361	.383	.400	.349
16	.335	.338	.367	.378	.341
17	.314	.321	.364	.358	.309
18	.303	.309	.356	.335	.282
19	.292	.297	.339	.307	.275
20	.285	.302	.333	.296	.250
21	.279	.309	.327	.296	.224
22	.276	.306	.320	.291	.217
23	.258	.291	.312	.293	.207
24	.238	.275	.299	.276	.202
25	.223	.261	.294	.257	.202
26	.216	.256	.284	.247	.201
27	.219	.261	.281	.227	.199
28	.211	.255	.276	.201	.185
29	.196	.237	.266	.189	.179
30	.194	.217	.241	.170	.182
31	.172	.194	.233	.193	.179
32	.166	.183	.221	.137	.165
33	.170	.177	.215	.121	.157
34	.171	.170	.205	.114	.152
35	.161	.161	.192	.109	.144
36	.157	.146	.173	.121	.142
37	.150	.144	.166	.123	.124
38	.135	.134	.165	.123	.124
39	.125	.131	.160	.128	.134
40	.114	.131	.164	.134	.131
41	.114	.133	.160	.150	.136
42	.113	.121	.140	.145	.132
43	.118	.110	.125	.127	.128
44	.123	.111	.126	.129	.117
45	.126	.102	.137	.120	.122
46	.111	.913,-1	.141	.108	.120
47	.107	.937,-1	.137	.994,-1	.115
48	.106	.890,-1	.123	.857,-1	.124
49	.108	.845,-1	.111	.874,-1	.125
50	.117	.835,-1	.108	.960,-1	.128
51	.119	.819,-1	.102	.954,-1	.120
52	.106	.755,-1	.814,-1	.989,-1	.114
53	.899,-1	.717,-1	.672,-1	.102	.111
54	.805,-1	.593,-1	.569,-1	.113	.105
55	.786,-1	.585,-1	.467,-1	.118	.917,-1
56	.755,-1	.502,-1	.413,-1	.116	.781,-1
57	.704,-1	.451,-1	.487,-1	.110	.765,-1
58	.742,-1	.440,-1	.574,-1	.897,-1	.734,-1
59	.692,-1	.526,-1	.541,-1	.766,-1	.698,-1
60	.673,-1	.527,-1	.501,-1	.665,-1	.557,-1

Run No. 431 v component

K	Anemometer Position Number 1	2	3	4	5
00	1.000	1.000	1.000	1.000	1.000
01	.881	.885	.886	.906	.891
02	.847	.835	.835	.859	.841
03	.801	.791	.797	.822	.806
04	.761	.755	.766	.789	.786
05	.733	.727	.734	.761	.766
06	.705	.696	.709	.737	.746
07	.676	.669	.677	.714	.731
08	.653	.647	.646	.695	.716
09	.636	.620	.630	.676	.697
10	.625	.613	.615	.657	.682
11	.608	.589	.596	.643	.662
12	.602	.582	.580	.620	.642
13	.585	.566	.561	.601	.632
14	.580	.556	.559	.587	.622
15	.574	.553	.544	.573	.607
16	.558	.545	.541	.568	.592
17	.544	.537	.529	.554	.582
18	.532	.540	.528	.549	.582
19	.528	.530	.516	.540	.572
20	.518	.512	.499	.521	.562
21	.510	.494	.485	.507	.547
22	.493	.488	.479	.502	.532
23	.490	.480	.458	.479	.517
24	.477	.468	.445	.464	.502
25	.474	.463	.422	.454	.480
26	.467	.452	.413	.441	.473
27	.460	.437	.401	.433	.472
28	.445	.433	.389	.424	.464
29	.436	.417	.377	.415	.456
30	.411	.408	.373	.409	.446
31	.391	.391	.369	.407	.440
32	.382	.389	.371	.400	.427
33	.366	.375	.366	.390	.417
34	.353	.365	.359	.392	.413
35	.352	.364	.356	.389	.408
36	.345	.358	.358	.383	.404
37	.345	.362	.357	.383	.405
38	.348	.365	.363	.383	.400
39	.347	.365	.361	.385	.399
40	.355	.371	.360	.392	.389
41	.349	.366	.365	.395	.395
42	.351	.363	.351	.386	.393
43	.345	.359	.345	.378	.396
44	.344	.352	.339	.370	.397
45	.344	.352	.336	.362	.403
46	.330	.347	.335	.356	.410
47	.336	.342	.334	.347	.411
48	.331	.339	.332	.331	.393
49	.331	.339	.332	.326	.388
50	.341	.341	.327	.328	.389
51	.339	.350	.335	.328	.386
52	.341	.354	.339	.324	.388
53	.343	.357	.334	.319	.393
54	.342	.355	.335	.321	.398
55	.351	.364	.339	.316	.402
56	.358	.368	.339	.323	.401
57	.361	.374	.346	.333	.395
58	.353	.366	.351	.344	.395
59	.352	.361	.347	.347	.385
60	.348	.355	.347	.350	.383

Run No. 43; w component

	Anemometer Position Number				
K	1	2	3	4	5
00	1.000	1.000	1.000	1.000	1.000
01	.152	.212	.225	.188	.218
02	.167	.164	.181	.109	.141
03	.418,-1	.940,-1	.132	.315,-1	.154
04	.769,-1	.650,-1	.760,-1	.586,-1	.604,-1
05	.485,-2	.886,-1	.554,-1	.124,-1	.669,-1
06	.440,-1	.718,-1	.450,-1	.278,-1	.276,-1
07	.575,-1	.589,-2	-.966,-4	.972,-2	.490,-1
08	-.118,-1	.536,-1	-.188,-1	.245,-1	.186,-1
09	.488,-1	.171,-1	.441,-2	-.318,-1	.117,-1
10	.170,-1	.238,-1	.793,-2	-.515,-1	-.394,-2
11	-.796,-2	.101,-1	.253,-1	-.319,-1	.446,-1
12	-.175,-1	.144,-2	.311,-1	-.323,-1	-.390,-2
13	.104,-2	.752,-1	.534,-1	.101,-1	-.119,-2
14	.228,-1	.506,-1	.184,-1	.369,-1	-.113,-1
15	-.322,-1	.870,-1	-.479,-2	.685,-1	-.331,-1
16	-.978,-2	.209,-1	-.156,-1	.323,-1	-.203,-1
17	-.655,-2	-.157,-1	.320,-1	.674,-1	-.561,-1
18	.240,-1	.566,-2	.299,-1	.543,-1	-.237,-1
19	-.314,-2	.462,-1	.743,-1	.761,-1	-.431,-1
20	.183,-1	.475,-1	.328,-1	.524,-1	-.152,-1
21	.354,-1	.253,-1	.511,-1	.856,-1	-.308,-1
22	-.472,-1	.852,-1	.426,-1	.796,-1	-.152,-1
23	-.968,-2	.367,-1	.457,-1	.685,-1	.189,-1
24	.217,-1	.232,-1	.546,-1	.193,-2	.127,-1
25	.172,-1	.372,-1	.158,-1	.309,-1	.172,-1
26	-.487,-2	.342,-1	.827,-2	.230,-1	.627,-1
27	.207,-1	.732,-2	.329,-1	-.713,-2	.252,-1
28	.178,-1	.799,-3	.388,-1	-.125,-1	.307,-2
29	.234,-1	.158,-2	.501,-1	-.448,-2	-.225,-1
30	-.199,-1	.387,-1	.302,-1	.569,-1	.195,-1
31	-.989,-2	-.350,-2	.430,-2	.220,-1	.845,-2
32	-.295,-1	-.293,-1	.164,-1	-.398,-1	.845,-2
33	.136,-1	-.316,-1	-.141,-1	-.146,-1	.230,-1
34	.166,-2	.170,-1	-.253,-1	-.901,-2	.275,-1
35	-.115,-1	.570,-1	.550,-2	.285,-1	.144,-1
36	-.465,-2	-.323,-2	.551,-2	.256,-1	.859,-1
37	.173,-1	.161,-1	.169,-1	.454,-1	.219,-1
38	-.336,-1	.334,-1	.535,-2	.281,-1	.337,-2
39	-.409,-1	.420,-1	.749,-2	.140,-1	.458,-1
40	-.280,-1	.591,-1	.138,-1	.318,-1	.160,-1
41	-.455,-1	.234,-1	.484,-1	.402,-1	-.105,-1
42	-.618,-1	-.112,-1	.631,-2	.399,-1	.104,-1
43	-.485,-1	-.307,-2	.185,-1	-.146,-1	-.124,-1
44	-.572,-1	.357,-2	.315,-1	.297,-1	-.381,-1
45	-.289,-1	-.158,-1	.564,-1	.446,-1	-.188,-1
46	.892,-2	.427,-1	.544,-1	.214,-1	-.205,-1
47	-.137,-1	-.211,-1	.349,-1	.331,-1	.315,-1
48	-.318,-1	-.452,-2	.353,-1	.236,-1	-.239,-1
49	-.475,-1	-.644,-2	.412,-1	-.390,-1	-.304,-1
50	.484,-2	-.377,-1	.827,-1	.339,-1	.427,-1
51	-.425,-1	.191,-2	.540,-1	.386,-1	.294,-2
52	-.272,-1	-.282,-2	.324,-1	-.129,-1	.275,-1
53	.946,-2	.678,-2	.352,-1	.478,-1	.500,-1
54	-.226,-1	-.785,-2	.214,-1	.438,-1	.255,-2
55	-.437,-1	.280,-2	.405,-1	.928,-1	.155,-1
56	-.346,-1	.287,-1	.543,-2	.740,-1	.182,-1
57	.281,-1	.313,-1	-.872,-2	.423,-3	-.239,-1
58	.105,-1	-.102,-1	.581,-1	.136,-1	.425,-1
59	-.100,-1	-.323,-1	.147,-1	.110,-1	.112,-1
60	.591,-1	.973,-2	.211,-1	.238,-1	-.144,-2

Run No. 44; u component

K	Anemometer Position Number 1	2	3	4	5
00	1.000	1.000	1.000	1.000	1.000
01	.808	.826	.869	.797	.863
02	.719	.713	.768	.695	.766
03	.665	.655	.705	.605	.715
04	.599	.597	.662	.547	.664
05	.552	.543	.629	.505	.625
06	.514	.494	.595	.476	.590
07	.481	.461	.565	.408	.574
08	.452	.420	.536	.369	.555
09	.420	.393	.502	.327	.523
10	.393	.367	.489	.299	.508
11	.369	.345	.481	.277	.500
12	.368	.337	.464	.265	.496
13	.354	.325	.451	.255	.473
14	.344	.333	.447	.259	.453
15	.332	.328	.426	.261	.441
16	.328	.320	.412	.262	.438
17	.332	.319	.408	.277	.434
18	.322	.318	.406	.266	.426
19	.305	.309	.408	.252	.422
20	.306	.301	.399	.246	.414
21	.304	.308	.384	.252	.398
22	.310	.313	.366	.267	.395
23	.286	.313	.355	.273	.395
24	.275	.295	.352	.277	.395
25	.284	.293	.346	.279	.391
26	.289	.294	.341	.290	.389
27	.300	.290	.351	.303	.388
28	.311	.299	.363	.320	.381
29	.305	.322	.360	.343	.363
30	.301	.333	.354	.347	.348
31	.323	.342	.350	.364	.335
32	.329	.355	.341	.373	.320
33	.313	.334	.326	.369	.305
34	.316	.320	.314	.339	.292
35	.310	.332	.311	.345	.306
36	.310	.334	.308	.309	.310
37	.311	.322	.295	.284	.311
38	.301	.289	.286	.248	.301
39	.284	.267	.274	.229	.294
40	.265	.249	.253	.201	.283
41	.241	.222	.236	.187	.280
42	.225	.210	.232	.155	.273
43	.224	.200	.228	.152	.259
44	.219	.193	.225	.144	.243
45	.219	.193	.217	.150	.230
46	.200	.175	.212	.132	.222
47	.195	.161	.205	.120	.205
48	.196	.144	.203	.116	.200
49	.189	.146	.207	.125	.210
50	.190	.151	.206	.138	.202
51	.177	.142	.200	.146	.201
52	.180	.140	.189	.156	.197
53	.180	.146	.181	.155	.192
54	.171	.140	.170	.153	.187
55	.163	.132	.170	.161	.171
56	.159	.133	.170	.162	.159
57	.164	.146	.169	.166	.151
58	.160	.161	.173	.169	.147
59	.154	.157	.173	.180	.154
60	.153	.147	.173	.176	.151

Run No. 44; v component

K	Anemometer Position Number 1	2	3	4	5
00	1.000	1.000	1.000	1.000	1.000
01	.904	.895	.904	.927	.872
02	.871	.865	.876	.880	.837
03	.842	.843	.862	.860	.797
04	.815	.817	.838	.838	.775
05	.799	.803	.823	.817	.762
06	.779	.786	.822	.800	.749
07	.759	.769	.804	.787	.741
08	.743	.747	.778	.770	.713
09	.743	.734	.764	.762	.700
10	.716	.721	.756	.749	.674
11	.703	.703	.747	.736	.670
12	.693	.694	.736	.732	.656
13	.680	.686	.729	.719	.656
14	.670	.668	.714	.711	.647
15	.660	.659	.696	.702	.630
16	.657	.646	.689	.693	.601
17	.657	.646	.678	.694	.590
18	.647	.642	.678	.685	.568
19	.640	.633	.673	.683	.568
20	.630	.633	.668	.660	.555
21	.624	.633	.658	.651	.559
22	.624	.624	.651	.638	.551
23	.617	.616	.647	.630	.537
24	.614	.620	.640	.621	.520
25	.611	.616	.651	.626	.502
26	.597	.607	.636	.621	.493
27	.597	.603	.629	.621	.493
28	.597	.598	.629	.626	.493
29	.594	.598	.622	.617	.480
30	.594	.590	.624	.609	.458
31	.591	.590	.620	.591	.449
32	.591	.585	.609	.583	.441
33	.574	.581	.609	.579	.429
34	.578	.576	.602	.570	.417
35	.574	.572	.591	.570	.392
36	.568	.559	.589	.570	.389
37	.564	.559	.589	.574	.374
38	.554	.555	.584	.566	.372
39	.553	.559	.576	.557	.357
40	.554	.555	.582	.553	.359
41	.554	.555	.573	.549	.347
42	.548	.550	.567	.545	.330
43	.508	.541	.567	.545	.322
44	.538	.537	.553	.545	.315
45	.528	.533	.551	.545	.302
46	.525	.520	.540	.545	.280
47	.518	.511	.544	.549	.261
48	.515	.511	.538	.545	.235
49	.515	.515	.533	.545	.217
50	.521	.515	.527	.540	.196
51	.521	.520	.518	.536	.189
52	.525	.520	.518	.532	.172
53	.525	.520	.511	.523	.162
54	.515	.507	.509	.519	.153
55	.512	.502	.502	.511	.146
56	.505	.498	.493	.502	.136
57	.492	.480	.487	.494	.123
58	.485	.476	.482	.489	.113
59	.482	.476	.484	.477	.107
60	.479	.476	.478	.468	.938,-1

Run No. 44; w component

K	Anemometer Position Number 1	2	3	4	5
00	1.000	1.000	1.000	1.000	1.000
01	.153	.160	.192	.188	.186
02	.100	.988,-1	.773,-1	.150	.937,-1
03	.175,-2	.830,-1	.960,-1	.147	.487,-1
04	.473,-1	.933,-1	.825,-1	.453,-1	-.121,-1
05	.639,-1	.945,-1	.173,-1	.107	.937,-2
06	-.605,-2	.105	.186,-1	.863,-1	.497,-1
07	.345,-1	.372,-1	-.295,-1	.530,-1	.446,-1
08	-.275,-1	.585,-1	-.622,-2	.615,-1	.389,-1
09	.859,-1	.544,-1	.121,-1	.641,-1	.498,-1
10	.493,-1	.348,-1	-.261,-1	.153,-1	.925,-1
11	.580,-2	.618,-1	-.577,-1	.396,-1	.598,-2
12	.980,-2	.752,-1	-.307,-1	-.427,-2	.373,-1
13	-.756,-2	.591,-1	-.618,-1	.782,-2	.349,-1
14	-.386,-1	.157,-2	-.765,-1	.136,-1	-.948,-2
15	-.722,-2	.606,-2	-.183,-1	.297,-1	-.592,-2
16	-.120,-1	.487,-1	.125,-1	-.207,-1	.502,-1
17	-.425,-1	-.603,-2	.201,-1	.432,-1	.298,-1
18	-.294,-1	.208,-1	.426,-1	.399,-1	.568,-1
19	-.498,-1	-.128,-1	.277,-1	-.474,-2	.244,-1
20	-.141,-1	.454,-2	.298,-1	-.108,-1	.338,-1
21	.155,-1	.721,-1	-.235,-1	-.906,-3	-.310,-1
22	.605,-2	-.163,-2	-.339,-1	.214,-1	-.318,-1
23	.395,-2	.525,-1	.622,-2	-.838,-2	-.328,-1
24	-.258,-1	-.195,-1	.609,-1	.109,-2	-.330,-1
25	-.507,-1	-.152,-1	.359,-1	-.774,-2	-.409,-1
26	-.398,-1	.195,-1	.614,-1	-.739,-3	-.207,-2
27	-.179,-1	.117,-1	.346,-1	-.457,-1	.374,-1
28	-.470,-1	.169,-1	-.175,-1	-.457,-1	-.184,-1
29	-.163,-1	.573,-1	-.119,-1	-.308,-1	.351,-2
30	-.522,-1	-.229,-1	.323,-2	-.161,-1	.514,-2
31	-.446,-2	-.234,-1	.102,-1	.129,-1	-.207,-1
32	.370,-1	.525,-1	-.137,-2	-.146,-1	-.265,-1
33	.194,-1	.388,-1	-.220,-1	.309,-1	-.290,-1
34	-.663,-1	.497,-1	-.377,-1	.863,-2	-.118,-1
35	-.541,-1	-.405,-1	.119, 1	.314,-1	-.493,-1
36	-.144,-1	.588,-2	-.112,-2	.487,-1	-.149,-1
37	.859,-2	-.715,-2	-.721,-1	-.667,-2	.605,-2
38	.174,-1	.419,-2	-.502,-1	-.126,-1	.170,-1
39	-.241,-1	.143,-1	-.358,-1	-.962,-3	-.210,-1
40	-.185,-1	.266,-2	-.717,-1	-.255,-1	.393,-1
41	-.407,-2	-.156,-1	-.932,-1	-.662,-1	-.127,-1
42	.546,-2	.450,-1	-.606,-1	-.833,-1	-.501,-1
43	-.271,-1	-.721,-2	-.294,-1	.138,-1	-.112,-1
44	.141,-1	-.435,-2	-.283,-1	-.440,-1	-.226,-1
45	.416,-1	-.127,-1	-.522,-1	-.131,-1	-.107,-1
46	.629,-1	-.307,-1	.118,-1	-.130,-1	.248,-1
47	.332,-1	-.589,-2	.649,-3	-.645,-1	-.169,-1
48	.465,-2	-.377,-1	.749,-2	-.409,-1	-.145,-1
49	-.829,-2	.121,-2	.211,-1	-.106,-1	.943,-2
50	-.888,-2	.193,-1	.594,-1	.599,-1	-.396,-2
51	-.235,-1	-.462,-2	.733,-1	.270,-1	-.262,-1
52	.321,-2	.655,-1	.105	-.416,-2	-.194,-1
53	.119,-1	-.104,-1	.182,-1	.466,-1	-.420,-1
54	-.292,-1	-.685,-2	.127,-1	.126,-1	-.787,-2
55	-.365,-1	.285,-2	.186,-1	.376,-1	.190,-1
56	.454,-4	.355,-2	.402,-1	.585,-1	.515,-1
57	.181,-2	.199,-1	.238,-1	.667,-2	.283,-2
58	.261,-2	.648,-1	-.366,-1	-.752,-2	.621,-1
59	.849,-3	-.310,-1	.347,-2	.287,-1	.480,-1
60	.333,-1	.151,-1	-.761,-2	-.457,-1	.509,-1

Run No. 45; u component

K	Anemometer Position Number 1	2	3	4	5
00	1.000	1.000		1.000	1.000
01	.720	.757		.716	.747
02	.576	.606		.614	.600
03	.490	.508		.556	.522
04	.425	.457		.503	.457
05	.376	.414		.477	.395
06	.324	.374		.446	.342
07	.290	.329		.421	.323
08	.264	.291		.399	.296
09	.242	.256		.391	.257
10	.234	.236		.384	.275
11	.213	.223		.360	.270
12	.183	.190		.368	.289
13	.146	.185		.374	.266
14	.128	.178		.354	.273
15	.126	.155		.335	.284
16	.904,-1	.148		.307	.281
17	.844,-1	.148		.292	.275
18	.757,-1	.122		.275	.257
19	.960,-1	.123		.269	.236
20	.868,-1	.123		.258	.215
21	.939,-1	.134		.244	.201
22	.990,-1	.156		.224	.188
23	.917,-1	.140		.206	.181
24	.803,-1	.124		.221	.155
25	.917,-1	.114		.229	.168
26	.974,-1	.137		.212	.156
27	.105	.155		.226	.131
28	.107	.169		.208	.110
29	.110	.171		.185	.115
30	.104	.158		.165	.103
31	.100	.129		.184	.109
32	.862,-1	.123		.166	.127
33	.813,-1	.125		.168	.145
34	.801,-1	.143		.170	.129
35	.685,-1	.134		.183	.125
36	.523,-1	.133		.180	.114
37	.413,-1	.128		.193	.119
38	.415,-1	.122		.189	.105
39	.471,-1	.122		.118	.893,-1
40	.664,-1	.133		.192	.659,-1
41	.803,-1	.113		.190	.570,-1
42	.659,-1	.105		.186	.406,-1
43	.686,-1	.105		.170	.342,-1
44	.900,-1	.114		.169	.337,-1
45	.851,-1	.111		.177	.145,-1
46	.717,-1	.113		.137	.115,-2
47	.382,-1	.107		.184	.187,-1
48	.246,-1	.875,-1		.169	.354,-1
49	.261,-1	.688,-1		.169	.433,-1
50	.399,-1	.550,-1		.171	.513,-1
51	.553,-1	.624,-1		.159	.463,-1
52	.589,-1	.837,-1		.162	.665,-1
53	.738,-1	.927,-1		.163	.687,-1
54	.718,-1	.960,-1		.141	.827,-1
55	.890,-1	.115		.150	.900,-1
56	.971,-1	.122		.159	.993,-1
57	.807,-1	.111		.168	.103
58	.564,-1	.907,-1		.178	.101
59	.484,-1	.812,-1		.158	.102
60	.414,-1	.749,-1		.143	.107



Run No. 45; v component

K	Anemometer Position Number 1	2	4	5
00	1.000	1.000	1.000	1.000
01	.754	.720	.755	.642
02	.645	.675	.685	.564
03	.654	.640	.640	.523
04	.622	.600	.612	.487
05	.629	.632	.586	.464
06	.615	.604	.570	434
07	.594	.590	.554	.420
08	.594	.578	.548	.405
09	.580	.575	.535	.393
10	.574	.554	.489	.379
11	.557	.550	.492	.361
12	.561	.528	.456	.354
13	.557	.530	.493	.354
14	.527	.511	.449	.340
15	.510	.495	.442	.339
16	.505	.479	.459	.345
17	.499	.465	.455	.340
18	.497	.466	.442	.317
19	.469	.465	.458	.314
20	.461	.446	.431	.306
21	.453	.438	.425	.292
22	.454	.447	.422	.269
23	.437	.428	.424	.286
24	.439	.436	.419	.260
25	.432	.422	.406	.245
26	.433	.394	.383	.228
27	.411	.406	.357	.224
28	.411	.411	.357	.221
29	.420	.402	.346	.204
30	.415	.387	.349	.227
31	.430	.386	.341	.224
32	.444	.396	.335	.210
33	.426	.402	.309	.198
34	.449	.393	.290	.180
35	.429	.401	.278	.178
36	.428	.368	.285	.170
37	.418	.381	.281	.178
38	.396	.372	.294	.178
39	.377	.359	.281	.162
40	.387	.364	.278	.126
41	.378	.347	.279	.123
42	.389	.379	.270	.120
43	.403	.369	.263	.104
44	.387	.354	.258	.107
45	.384	.348	.269	.129
46	.381	.339	.257	.115
47	.367	.325	.239	.120
48	.361	.330	.227	.157
49	.353	.323	.204	.133
50	.371	.310	.203	.110
51	.358	.324	.224	.106
52	.360	.325	.209	.923,-1
53	.348	.324	.216	.110
54	.355	.320	.220	.123
55	.348	.314	.225	.895,-1
56	.346	.302	.223	.858,-1
57	.337	.294	.225	.973,-1
58	.313	.294	.230	.824,-1
59	.299	.284	.217	.520,-1
60	.305	.269	.211	.499,-1

Run No. 45; v component

	Anemometer Position Number				
K	1	2	3	4	5
00	1.000	1.000		1.000	1.000
01	.139	.709,-1		.182	.993,-1
02	.357,-1	.528,-1		.895,-1	.341,-1
03	.242,-1	-.266,-1		.245,-1	.141,-1
04	.101,-1	.618,-1		.569,-1	-.412,-1
05	.198,-2	.366,-1		.135,-2	-.818,-1
06	.203,-1	.668,-1		.949,-1	.889,-2
07	.786,-2	.757,-1		-.671,-2	.175,-2
08	.389,-1	-.316,-3		-.417,-2	-.410,-3
09	.483,-1	.409,-1		-.258,-1	-.140,-1
10	.321,-1	.421,-1		.848,-2	.100,-1
11	.170,-1	-.436,-2		.511,-2	.315,-1
12	.899,-2	-.138,-1		-.759,-2	.105,-1
13	-.137,-1	-.186,-1		-.161,-1	-.474,-1
14	-.228,-1	-.109,-1		-.209,-1	.165,-1
15	.815,-2	.896,-1		-.399,-1	.649,-2
16	.249,-1	.861,-1		.528,-1	-.779,-2
17	.131,-1	.391,-2		.629,-2	.378,-1
18	-.404,-1	-.195,-1		.801,-2	-.505,-1
19	-.375,-1	.406,-2		.180,-1	-.666,-2
20	.109,-1	.109,-1		-.145,-1	.449,-2
21	.177,-2	-.355,-1		-.475,-1	.563,-1
22	.798,-1	-.386,-1		-.105,-1	.297,-1
23	.420,-1	.378,-2		.155,-1	-.308,-1
24	.651,-4	-.797,-2		-.823,-2	-.494,-2
25	.235,-1	.516,-2		-.470,-2	-.880,-1
26	.399,-1	.164,-1		.114,-1	-.218,-1
27	.810,-1	-.156,-1		.658,-1	.587,-1
28	.320,-1	.368,-1		.429,-1	.732,-2
29	.133,-1	.998,-1		.204,-1	-.250,-1
30	.311,-1	.743,-2		-.132,-2	-.934,-2
31	.401,-1	.805,-2		.382,-3	-.104,-1
32	-.145,-1	.464,-1		-.195,-1	-.110,-2
33	.478,-1	-.709,-3		-.741,-2	-.519,-2
34	.485,-1	.281,-1		-.712,-1	.743,-2
35	.234,-1	-.851,-2		.126,-1	-.379,-1
36	.160,-1	.434,-1		-.224,-2	.804,-2
37	-.266,-1	-.109,-2		-.772,-1	-.220,-2
38	-.568,-1	.851,-2		-.384,-1	.259,-1
39	-.443,-2	-.382,-2		.417,-2	-.428,-1
40	.152,-1	.413,-1		-.343,-1	-.413,-1
41	.205,-1	.101,-1		.119,-1	.297,-1
42	.475,-1	-.370,-1		-.466,-1	.347,-1
43	.382,-1	.5[illegible],-1		.185,-1	-.107,-1
44	-.509,-2	.317,-2		-.727,-2	[illegible]
45	-.305,-1	.613,-1		-.110,-1	-.224,-1
46	-.497,-1	-.784,-1		.202,-1	-.378,-1
47	-.410,-1	.416,-2		-.209,-1	-.310,-1
48	-.304,-1	-.267,-1		-.557,-1	.304,-1
49	-.362,-1	.122,-1		.606,-2	-.645,-2
50	.301,-1	-.270,-1		-.232,-1	.466,-1
51	.240,-1	.559,-1		-.193,-1	.892,-2
52	.315,-1	-.272,-1		-.684,-2	.581,-1
53	.157,-1	.138,-1		-.500,-1	.121,-1
54	-.277,-1	-.241,-2		-.189,-1	-.719,-2
55	-.160,-1	-.567,-1		.139,-2	-.268,-1
56	.661,-2	.472,-2		.886,-2	.993,-2
57	.543,-2	-.294,-1		.389,-2	.160,-1
58	.752,-2	-.295,-2		.153,-2	.919,-2
59	-.526,-2	-.510,-1		.262,-2	.158,-1
60	-.935,-2	.959,-2		-.123,-2	-.794,-1

Run No. 46: u component

K	Anemometer Position Number 1	2	3	4	5
00	1.000	1.000	1.000	1.000	1.000
01	.750	.80[illegible]	.719	.82[illegible]	.774
02	.579	.66[illegible]	.571	.691	.634
03	.481	.585	.49[illegible]	.618	.554
04	.421	.511	.426	.564	.52[illegible]
05	.3[illegible]	.454	.391	.50[illegible]	.485
06	.391	.414	.391	.454	.47[illegible]
07	.353	.376	.3[illegible]	.465	.454
08	.32[illegible]	.341	.3[illegible]	.4[illegible]	.421
09	.2[illegible]	.3[illegible]	.32[illegible]	.401	.395
10	.268	.272	.292	.384	.374
11	.259	.265	.281	.368	.368
12	.254	.241	.271	.349	.358
13	.264	.240	.267	.3[illegible]	.346
14	.2[illegible]1	.242	.297	.3[illegible]4	.3[illegible]
15	.206	.226	.2[illegible]	.342	.318
16	.1[illegible]2	.215	.264	.32[illegible]	.327
17	.197	.211	.267	.322	.32[illegible]
18	.187	.211	.25[illegible]	.3[illegible]	.344
19	.172	.20[illegible]	.24[illegible]	.3[illegible]	.335
20	.187	.195	.244	.314	.336
21	.154	.198	.242	.313	.32[illegible]
22	.141	.197	.247	.308	.320
23	.125	.164	.240	.304	.331
24	.119	.172	.225	.301	.321
25	.104	.120	.200	.295	.299
26	.107	.121	.205	.29[illegible]	.281
27	.892,-1	.128	.175	.307	.269
28	.717,-1	.138	.136	.309	.248
29	.606,-1	.130	.144	.294	.251
30	.589,-1	.123	.148	.282	.249
31	.443,-1	.116	.133	.265	.248
32	.281,-1	.111	.144	.238	.257
33	.427,-1	.107	.124	.226	.248
34	.4[illegible],-1	.101	.1[illegible]	.212	.257
35	.464,-1	.107	.149	.192	.255
36	.640,-1	.119	.144	.184	.259
37	.865,-1	.122	.142	.192	.251
38	.849,-1	.119	.147	.189	.257
39	.721,-1	.116	.168	.17[illegible]	.274
40	.542,-1	.132	.179	.185	.264
41	.582,-1	.139	.177	.185	.263
42	.828,-1	.124	.144	.171	.252
43	.837,-1	.100	.130	.167	.254
44	.755,-1	.101	.129	.184	.232
45	.820,-1	.966,-1	.152	.192	.221
46	.816,-1	.999,-1	.158	.203	.224
47	.869,-1	.103	.141	.225	.246
48	.897,-1	.970,-1	.139	.238	.240
49	.975,-1	.815,-1	.117	.245	.252
50	.129	.741,-1	.894,-1	.257	.245
51	.133	.899,-1	.849,-1	.260	.251
52	.115	.100	.772,-1	.258	.248
53	.125	.971,-1	.730,-1	.259	.248
54	.148	.105	.865,-1	.258	.241
55	.167	.123	.102	.258	.248
56	.170	.123	.130	.239	.243
57	.150	.126	.121	.238	.238
58	.143	.131	.130	.227	.240
59	.128	.138	.141	.212	.229
60	.116	.131	.135	.196	.217

Run No. 40; v component

	Anemometer Position Number				
K	1	2	3	4	5
00	1.000	1.000	1.000	1.000	1.000
01	.599	.615	.662	.709	.650
02	.530	.534	.552	.651	.604
03	.523	.495	.525	.608	.565
04	.495	.475	.508	.587	.550
05	.498	.462	.487	.564	.553
06	.473	.479	.512	.555	.519
07	.470	.474	.492	.552	.504
08	.456	.497	.502	.555	.507
09	.472	.470	.496	.540	.504
10	.465	.481	.488	.527	.514
11	.470	.484	.473	.557	.494
12	.469	.455	.504	.554	.470
13	.479	.442	.496	.555	.484
14	.466	.453	.529	.540	.471
15	.465	.464	.525	.537	.470
16	.474	.460	.526	.544	.455
17	.473	.470	.527	.545	.479
18	.478	.475	.519	.541	.467
19	.475	.474	.521	.536	.460
20	.463	.470	.502	.509	.460
21	.475	.457	.477	.506	.450
22	.480	.468	.485	.502	.462
23	.475	.462	.494	.524	.464
24	.473	.481	.489	.527	.453
25	.495	.462	.487	.542	.455
26	.490	.451	.489	.502	.456
27	.468	.460	.477	.502	.465
28	.486	.453	.482	.514	.455
29	.475	.474	.490	.524	.458
30	.475	.466	.487	.519	.463
31	.475	.467	.489	.509	.462
32	.482	.458	.490	.517	.467
33	.461	.464	.504	.524	.468
34	.454	.460	.492	.537	.465
35	.469	.476	.500	.529	.467
36	.458	.462	.497	.521	.459
37	.489	.462	.489	.519	.460
38	.473	.471	.477	.512	.475
39	.469	.460	.477	.502	.478
40	.454	.470	.467	.517	.463
41	.484	.470	.492	.506	.462
42	.473	.477	.521	.504	.473
43	.477	.475	.548	.499	.471
44	.480	.468	.506	.496	.465
45	.470	.485	.490	.499	.454
46	.481	.469	.487	.486	.471
47	.456	.482	.479	.489	.460
48	.484	.466	.467	.479	.479
49	.440	.468	.477	.471	.463
50	.431	.468	.467	.466	.484
51	.438	.464	.473	.493	.456
52	.426	.464	.488	.473	.461
53	.436	.446	.498	.473	.463
54	.420	.425	.496	.484	.447
55	.428	.433	.504	.483	.471
56	.456	.427	.512	.491	.445
57	.443	.427	.500	.489	.448
58	.454	.435	.469	.484	.443
59	.475	.453	.479	.504	.443
60	.470	.431	.475	.506	.461

Run No. 46; w component

K	Anemometer Position Number 1	2	3	4	5
00	1.000	1.000	1.000	1.000	1.000
01	.[illegible],-1	.[illegible],-1	.144	.902,-1	.754,-1
02	-.[illegible],-2	.103	.836,-1	.669,-2	.680,-1
03	.256,-1	.147,-1	.835,-1	.[illegible],-1	-.[illegible],-1
04	.220,-1	.[illegible],-1	.[illegible],-1	.224,-1	.162,-1
05	.[illegible],-1	.[illegible],-1	.[illegible],-1	.[illegible],-2	.[illegible],-2
06	.[illegible],-1	.[illegible],-1	-.[illegible],-1	-.[illegible],-2	.[illegible],-2
07	.[illegible],-1	.[illegible],-1	-.[illegible],-1	.[illegible],-1	.[illegible],-2
08	.417,-1	.[illegible],-1	.[illegible],-2	-.[illegible],-1	-.[illegible],-1
09	-.[illegible],-1	.[illegible],-1	-.[illegible],-1	-.[illegible],-1	.[illegible],-1
10	.[illegible],-1	.[illegible],-1	.[illegible],-1	-.[illegible],-1	.[illegible],-2
11	.[illegible],-1	.[illegible],-1	.[illegible],-1	.[illegible],-2	-.[illegible],-2
12	-.[illegible],-2	.[illegible],-1	.[illegible],-1	.[illegible],-1	-.[illegible],-1
13	.[illegible],-2	.[illegible],-1	.[illegible],-1	.[illegible],-2	.[illegible],-1
14	-.[illegible],-2	.[illegible],-1	.[illegible],-1	.[illegible],-2	.[illegible],-1
15	-.[illegible],-1	.[illegible],-1	.[illegible],-1	-.[illegible],-2	.[illegible],-1
16	-.[illegible],-1	.[illegible],-1	.[illegible],-1	.[illegible],-1	-.[illegible],-1
17	-.[illegible],-1	-.[illegible],-1	.[illegible],-1	-.[illegible],-1	.[illegible],-1
18	-.[illegible],-1	-.[illegible],-1	.[illegible],-1	.[illegible],-2	.140,-1
19	-.[illegible],-1	.[illegible],-1	.147,-1	.[illegible],-1	-.[illegible],-1
20	-.[illegible],-1	.[illegible],-1	-.[illegible],-1	.[illegible],-1	-.[illegible],-1
21	.[illegible],-1	.[illegible],-1	-.[illegible],-1	.[illegible],-1	-.[illegible],-1
22	-.[illegible],-2	.[illegible],-1	.[illegible],-1	-.[illegible],-2	-.[illegible],-1
23	-.[illegible],-2	.[illegible],-1	.[illegible],-2	.[illegible],-1	.[illegible],-1
24	-.[illegible],-1	-.[illegible],-1	-.[illegible],-1	-.[illegible],-1	-.[illegible],-1
25	.[illegible],-1	.[illegible],-1	-.[illegible],-1	-.[illegible],-1	-.[illegible],-1
26	-.[illegible],-1	.[illegible],-2	-.[illegible],-1	.[illegible],-1	-.[illegible],-1
27	-.[illegible],-1	.[illegible],-1	-.[illegible],-1	.[illegible],-1	.[illegible],-1
28	-.[illegible],-1	-.[illegible],-1	-.[illegible],-1	.[illegible],-1	-.[illegible],-1
29	-.[illegible],-1	.[illegible],-2	-.[illegible],-1	-.[illegible],-2	-.[illegible],-2
30	.[illegible],-2	-.[illegible],-1	-.[illegible],-2	.241,-1	-.491,-1
31	.[illegible],-1	-.[illegible],-1	-.[illegible],-1	.[illegible],-2	-.[illegible],-1
32	-.[illegible],-1	.[illegible],-1	.[illegible]-2	-.[illegible],-1	.[illegible],-1
33	-.[illegible],-1	.[illegible],-1	-.[illegible],-2	-.111,-1	-.[illegible],-2
34	.[illegible],-2	.[illegible],-1	.[illegible],-2	-.[illegible],-2	.[illegible],-1
35	.[illegible],-1	.[illegible],-1	.[illegible],-1	.[illegible],-1	.[illegible],-2
36	-.[illegible],-1	.[illegible],-1	-.[illegible],-1	-.[illegible],-1	.[illegible],-1
37	.[illegible],-1	.[illegible],-1	-.[illegible],-1	-.[illegible],-2	.[illegible],-1
38	-.[illegible],-1	-.[illegible],-2	-.[illegible],-1	-.[illegible],-1	.[illegible],-1
39	.[illegible],-1	-.[illegible],-1	-.[illegible],-1	.[illegible],-1	.[illegible],-1
40	-.[illegible],-2	.[illegible],-1	-.[illegible],-1	.[illegible],-1	.161,-1
41	.[illegible]	-.[illegible],-1	-.[illegible],-2	.[illegible],-1	-.[illegible],-1
42	.[illegible],-1	-.[illegible],-2	.[illegible],-1	.[illegible],-1	-.[illegible],-1
43	.[illegible],-1	-.[illegible],-1	-.[illegible],-2	.[illegible],-1	-.[illegible],-1
44	-.[illegible],-2	-.[illegible],-1	-.[illegible],-1	-.[illegible],-1	.[illegible],-1
45	.[illegible],-1	-.[illegible],-2	.[illegible],-1	-.[illegible],-1	.[illegible],-1
46	-.[illegible],-2	.[illegible],-2	.[illegible],-1	-.[illegible],-1	-.[illegible],-1
47	.[illegible],-1	-.[illegible],-1	.[illegible],-1	.[illegible],-1	.[illegible],-1
48	.[illegible],-2	.[illegible],-1	.[illegible],-1	-.[illegible],-1	-.[illegible],-2
49	-.[illegible],-1	-.[illegible],-1	.[illegible],-1	.[illegible],-2	-.[illegible],-1
50	-.[illegible],-1	-.[illegible],-1	.[illegible],-1	-.[illegible],-2	-.[illegible],-2
51	.[illegible],-1	-.[illegible],-1	-.[illegible],-1	.[illegible],-2	-.[illegible],-2
52	.[illegible],-2	-.[illegible],-1	.[illegible],-1	-.[illegible],-2	.[illegible],-1
53	-.[illegible],-1	-.[illegible],-1	.[illegible],-1	-.[illegible],-1	.[illegible],-2
54	.[illegible],-1	-.[illegible],-1	.[illegible],-1	.[illegible],-1	.[illegible],-1
55	.[illegible],-1	-.[illegible],-1	-.[illegible],-1	.[illegible],-1	.[illegible],-1
56	.[illegible],-1	-.[illegible],-1	-.[illegible],-1	.[illegible],-1	-.[illegible],-1
57	.[illegible],-1	.[illegible],-2	-.[illegible],-1	.[illegible],-1	-.[illegible],-1
58	.[illegible],-1	.[illegible],-1	.[illegible],-1	.[illegible],-1	-.[illegible],-2
59	.[illegible],-1	-.[illegible],-1	.[illegible],-2	.[illegible],-1	.[illegible],-1
60	.[illegible],-2	-.[illegible],-2	-.[illegible],-1	.[illegible],-2	-.[illegible],-1

Run No. 53; u component

K	Anemometer Position Number 1	2	3	4	5
00	1.000	1.000	1.000	1.000	1.000
01	.532	.563	.540	.557	.635
02	.369	.374	.333	.391	.529
03	.318	.334	.297	.337	.500
04	.298	.290	.267	.344	.491
05	.279	.262	.269	.328	.450
06	.283	.293	.311	.272	.418
07	.290	.298	.333	.296	.441
08	.261	.255	.321	.292	.464
09	.279	.240	.335	.314	.438
10	.298	.270	.329	.335	.445
11	.288	.261	.327	.278	.441
12	.304	.281	.297	.257	.449
13	.298	.268	.282	.256	.458
14	.288	.221	.263	.253	.439
15	.264	.251	.289	.246	.453
16	.250	.234	.291	.217	.456
17	.264	.213	.271	.222	.479
18	.275	.243	.251	.286	.449
19	.309	.274	.263	.311	.423
20	.311	.290	.247	.319	.425
21	.275	.306	.235	.298	.454
22	.269	.305	.269	.272	.457
23	.285	.251	.257	.284	.458
24	.263	.205	.273	.277	.465
25	.240	.228	.335	.254	.450
26	.232	.240	.337	.222	.463
27	.263	.210	.283	.234	.453
28	.229	.200	.281	.240	.459
29	.226	.246	.301	.247	.450
30	.234	.262	.277	.238	.438
31	.260	.240	.307	.228	.463
32	.317	.243	.337	.213	.463
33	.314	.258	.319	.240	.448
34	.307	.246	.281	.246	.421
35	.288	.231	.271	.223	.423
36	.311	.266	.271	.259	.429
37	.271	.311	.253	.271	.449
38	.240	.309	.293	.286	.438
39	.277	.260	.329	.239	.438
40	.290	.269	.289	.241	.470
41	.322	.259	.285	.257	.458
42	.293	.250	.295	.268	.428
43	.311	.255	.257	.269	.436
44	.285	.266	.251	.251	.449
45	.256	.250	.257	.229	.473
46	.234	.166	.253	.244	.463
47	.252	.167	.219	.253	.474
48	.287	.207	.233	.260	.465
49	.256	.239	.251	.259	.486
50	.258	.250	.265	.229	.490
51	.290	.256	.329	.217	.469
52	.282	.236	.355	.246	.435
53	.260	.221	.293	.237	.453
54	.247	.197	.257	.254	.489
55	.244	.238	.221	.246	.453
56	.231	.220	.215	.281	.466
57	.226	.208	.259	.292	.436
58	.269	.237	.273	.278	.446
59	.268	.236	.245	.265	.430
60	.266	.199	.255	.238	.450

Run No. 53; v component

K	Anemometer Position Number 1	2	3	4	5
00	1.000	1.000	1.000	1.000	1.000
01	.422	.475	.466	.561	.302
02	.329	.426	.389	.419	.177
03	.298	.340	.396	.435	.204
04	.300	.362	.376	.447	.271
05	.373	.432	.390	.488	.269
06	.345	.419	.367	.480	.275
07	.337	.384	.384	.463	.232
08	.269	.430	.378	.439	.248
09	.320	.358	.355	.435	.246
10	.343	.349	.355	.451	.263
11	.346	.338	.388	.467	.230
12	.324	.328	.365	.455	.245
13	.270	.322	.362	.443	.223
14	.315	.378	.350	.439	.268
15	.292	.316	.335	.472	.261
16	.324	.358	.347	.451	.240
17	.312	.331	.369	.439	.213
18	.276	.322	.349	.472	.193
19	.281	.336	.365	.480	.249
20	.259	.305	.355	.435	.286
21	.301	.286	.360	.423	.261
22	.278	.288	.320	.431	.257
23	.304	.318	.317	.423	.210
24	.305	.330	.333	.423	.227
25	.254	.306	.326	.439	.190
26	.284	.313	.344	.455	.215
27	.284	.307	.329	.447	.250
28	.289	.315	.355	.443	.256
29	.296	.332	.343	.419	.234
30	.300	.348	.337	.399	.207
31	.282	.324	.362	.411	.185
32	.284	.305	.335	.451	.226
33	.296	.323	.317	.455	.227
34	.292	.340	.311	.447	.216
35	.260	.333	.312	.419	.187
36	.218	.323	.338	.427	.223
37	.265	.333	.342	.415	.244
38	.283	.348	.354	.467	.255
39	.293	.401	.336	.472	.239
40	.289	.372	.344	.467	.232
41	.286	.351	.353	.459	.225
42	.280	.298	.361	.411	.285
43	.297	.343	.362	.423	.225
44	.281	.332	.372	.427	.137
45	.232	.337	.376	.472	.166
46	.243	.326	.319	.427	.231
47	.221	.297	.322	.427	.229
48	.278	.343	.300	.411	.189
49	.274	.333	.312	.411	.213
50	.235	.292	.321	.447	.185
51	.212	.308	.315	.451	.216
52	.235	.291	.327	.443	.173
53	.277	.328	.317	.411	.221
54	.255	.322	.330	.423	.261
55	.215	.267	.325	.405	.215
56	.276	.313	.339	.376	.218
57	.206	.288	.332	.386	.243
58	.198	.252	.286	.463	.206
59	.254	.245	.281	.431	.228
60	.213	.218	.288	.411	.215

Run No. 93; w component

	Anemometer Position Number				
K	1	2	3	4	5
00	1.000	1.000	1.000	1.000	1.000
01	.144,-1	.606,-1	.277,-1	.103	.055,-1
02	-.169,-1	.868,-1	-.874,-1	-.[illegible],-1	.218,-1
03	.262,-1	647,-1	-.844,-1	.725,-1	.[illegible],-1
04	-.165,-1	.239,-1	-.627,-1	.400,-1	.267,-1
05	.354,-1	.245,-1	.243,-1	.[illegible]2,-1	-.[illegible],-2
06	-.539,-1	.619,-1	.906,-1	.[illegible]50,-1	.249,-1
07	.179,-1	.829,-1	.725,-1	.580,-1	-.731,-2
08	-.271,-1	.900,-1	-.104,-1	.518,-1	.470,-1
09	-.338,-1	.171	-.469,-1	.716,-1	.[illegible],-1
10	.[illegible],-1	.850,-1	-.548,-2	.496,-1	-.[illegible],-1
11	-.[illegible],-2	.[illegible]75,-1	.600,-1	.[illegible]3,-1	.148,-1
12	-.155,-1	.523,-1	-.130,-1	.[illegible],-1	.[illegible],-2
13	-.597,-1	.543,-1	-.[illegible]54,-2	.109	.[illegible],-1
14	.318,-1	.[illegible]20,-1	-.[illegible],-1	.[illegible]10	-.[illegible],-1
15	-.[illegible]12,-2	.616,-1	-.[illegible]24,-1	-.177,-2	-.[illegible],-1
16	-.177,-1	.585,-1	.570,-1	-.[illegible]76,-1	.[illegible]25,-1
17	.575,-1	.106	.595,-2	.[illegible]08,-1	-.[illegible],-2
18	-.[illegible]19,-1	.[illegible]44,-1	-.101,-1	.109	.146,-1
19	-.[illegible]85,-2	.[illegible]66,-1	-.[illegible]97,-1	.[illegible]49,-1	.[illegible]91,-1
20	.759,-2	.140,-1	.755,-2	.[illegible]70,-1	.[illegible]24,-1
21	.[illegible]50,-2	.[illegible]27,-1	.[illegible]10,-1	.[illegible]40,-1	-.[illegible]50,-2
22	.[illegible]75,-2	.[illegible]89,-1	-.[illegible]25,-1	.[illegible]20,-1	.[illegible]00,-1
23	.[illegible]37,-2	-.[illegible]75,-1	.[illegible]65,-1	.[illegible]47,-1	.[illegible]31,-1
24	.[illegible]19,-2	.[illegible]57,-1	.[illegible]55,-1	.[illegible]20,-1	.[illegible]06,-1
25	-.[illegible]13,-2	.[illegible]40,-1	.[illegible]97,-1	.[illegible]47,-1	.[illegible]27,-2
26	-.[illegible]42,-1	.[illegible]62,-1	.[illegible]07,-2	.[illegible]09,-1	.[illegible]40,-1
27	.[illegible]22,-2	.[illegible]09,-1	.[illegible]75,-2	.[illegible]03,-1	.[illegible]27,-1
28	-.[illegible]12,-1	.[illegible]88,-1	-.[illegible]55,-1	.[illegible]95,-1	.[illegible]74,-1
29	-.107	.[illegible]70,-1	-.[illegible]56,-1	.[illegible]44,-1	.[illegible]31,-1
30	.[illegible]40,-1	.[illegible]50,-1	-.[illegible]74,-1	-.[illegible]07,-1	-.[illegible],-1
31	-.270,-1	.[illegible]49,-1	.[illegible]40,-1	-.[illegible]42,-1	.[illegible]90,-1
32	-.125,-1	.[illegible]40,-1	.[illegible]50,-1	.[illegible]05,-1	-.[illegible]01,-2
33	-.[illegible]56,-1	.[illegible]63,-1	.[illegible]15,-1	.[illegible]90,-1	-.[illegible]4,-1
34	-.[illegible]65,-2	.[illegible]89,-1	.[illegible]08,-1	-.[illegible]27,-1	-.[illegible],-1
35	.154,-1	-.[illegible]15,-1	-.[illegible]27,-1	.[illegible]61,-1	.[illegible]42,-1
36	.271,-1	-.[illegible]01,-1	-.[illegible]57,-1	-.[illegible]40,-1	-.[illegible],-1
37	.550,-1	.177,-1	-.[illegible]85,-1	.[illegible]41,-1	-.[illegible],-1
38	.[illegible]51,-2	.[illegible]70,-1	-.[illegible]22,-1	.[illegible]42,-1	-.[illegible],-1
39	.207,-1	-.[illegible]12,-1	.[illegible]27,-1	.[illegible]11,-1	.[illegible]78,-2
40	-.[illegible]85,-1	.128	.[illegible]31,-1	.[illegible]87,-1	.[illegible]75,-1
41	.511,-1	.[illegible]28,-1	.[illegible]37,-1	.[illegible]30,-1	.[illegible]68,-1
42	-.[illegible]6[illegible],-2	.[illegible]57,-1	-.421,-1	.[illegible]47,-1	-.[illegible]78,-1
43	.[illegible]28,-1	.[illegible]96,-1	-.[illegible]57,-1	-.[illegible]40,-2	.[illegible]51,-2
44	-.904,-2	-.[illegible]95,-2	-.[illegible]44,-1	.[illegible]61,-1	-.[illegible]40,-2
45	.[illegible]82,-2	.[illegible]40,-1	.[illegible]55,-1	.[illegible]49,-1	-.[illegible]84,-1
46	.[illegible]11,-1	.[illegible]09,-1	.[illegible]43,-2	.[illegible]84,-1	-.[illegible]72,-1
47	.[illegible]84,-2	.[illegible]47,-1	-.[illegible]00,-1	.[illegible]91,-1	.[illegible]07,-1
48	.[illegible]44,-1	.[illegible]17,-1	-.[illegible]30,-1	-.[illegible]25,-1	-.[illegible]15,-1
49	-.[illegible]25,-1	.[illegible]97,-1	-.[illegible]10,-1	.[illegible]09,-1	.[illegible]25,-1
50	.726,-2	.[illegible]23,-1	.[illegible]94,-1	.[illegible]26,-1	.[illegible]71,-1
51	.[illegible]15,-1	.[illegible]08,-1	.[illegible]09	.727,-1	.[illegible]22,-1
52	-.[illegible]05,-1	.144,-1	.[illegible]05,-1	.[illegible]65,-1	-.[illegible]52,-1
53	.[illegible]66,-1	.[illegible]05,-1	-.[illegible]99,-1	.[illegible]61,-1	.[illegible]90,-1
54	.151,-1	.[illegible]27,-1	-.[illegible]00,-1	.904,-1	.711,-1
55	-.[illegible]16,-1	.[illegible]27,-1	.[illegible]00,-2	.[illegible]85,-1	-.[illegible]05,-1
56	-.[illegible]09,-1	.[illegible]27,-1	.[illegible]00,-1	.[illegible]16,-1	-.547,-2
57	-.[illegible]37,-2	.[illegible]06	.[illegible]00,-1	.[illegible]49,-2	-.[illegible]05,-1
58	.871,-1	.[illegible]45,-1	.[illegible]27,-1	.[illegible]92,-1	-.[illegible]35,-2
59	-.[illegible]38,-1	.[illegible]94,-1	-.[illegible]54,-1	.[illegible]05	-.[illegible]80,-2
60	.451,-1	.147,-1	-.[illegible]84,-1	.[illegible]13,-1	.[illegible]56,-1

Run No. 54; u component

	Anemometer Position Number				
K	1	2	3	4	5
00	1.000	1.000	1.000	1.000	1.000
01	.652	.565	.686	.696	.671
02	.464	.459	.506	.517	.486
03	.365	.373	.419	.418	.364
04	.307	.328	.355	.355	.298
05	.229	.305	.267	.316	.270
06	.211	.269	.261	.296	.269
07	.172	.192	.273	.270	.237
08	.142	.164	.256	.231	.178
09	.141	.156	.210	.225	.171
10	.134	.158	.188	.201	.159
11	.124	.149	.191	.182	.149
12	.207	.114	.182	.139	.925,-1
13	.210	.112	.168	.105	.687,-1
14	.215	.944,-1	.176	.913,-1	.835,-1
15	.205	.867,-1	.150	.984,-1	.171,-1
16	.191	.124	.162	.109	.173,-1
17	.142	.917,-1	.158	.111	.535,-1
18	.104	.787,-1	.118	.125	.308,-1
19	.831,-1	.840,-1	.109	.135	.245,-1
20	.942,-1	.757,-1	.907,-1	.135	.266,-1
21	.920,-1	.675,-1	.805,-1	.126	.155,-1
22	.972,-1	.102	.898,-1	.117	.871,-2
23	.107	.962,-1	.942,-1	.109	.320,-2
24	.106	.892,-1	.814,-1	.866,-1	.242,-1
25	.111	.811,-1	.875,-1	.665,-1	.174,-1
26	.101	.893,-1	.959,-1	.558,-1	.216,-1
27	.752,-1	.111	.846,-1	.627,-1	.382,-1
28	.648,-1	.100	.904,-1	.746,-1	.323,-1
29	.598,-1	.710,-1	.112	.625,-1	.649,-1
30	.432,-1	.805,-1	.846,-1	.696,-1	.739,-1
31	.402,-1	.772,-1	.459,-1	.580,-1	.887,-1
32	.441,-1	.675,-1	.224,-1	.278,-1	.962,-1
33	.567,-1	.769,-1	.121,-1	-.454,-4	.114
34	.619,-1	.976,-1	.505,-1	-.103,-1	.109
35	.114	.790,-1	.488,-1	.118,-1	.118
36	.126	.970,-1	.589,-1	.450,-1	.134
37	.120	.104	.552,-1	.171,-1	.115
38	.115	.118	.436,-1	-.858,-2	.109
39	.137	.135	.178,-1	.826,-2	.115
40	.122	.109	.168,-1	.102,-1	.144
41	.123	.116	.207,-1	.185,-1	.129
42	.116	.967,-1	.224,-1	.138,-1	.118
43	.145	.102	.297,-1	.247,-1	.116
44	.105	.970,-1	.252,-1	.184,-1	.947,-1
45	.704,-1	.911,-1	.779,-2	.801,-2	.502,-1
46	.371,-1	.947,-1	.140,-1	.110,-1	.520,-1
47	.492,-1	.104	.151,-1	.111,-2	.536,-1
48	.766,-1	.979,-1	.210,-1	.694,-2	.824,-1
49	.978,-1	.117	.241,-1	-.131,-1	.881,-1
50	.109	.105	.284,-1	-.811,-2	.928,-1
51	.118	.926,-1	.279,-1	.647,-2	.567,-1
52	.153	.127	.602,-1	.938,-2	.209,-1
53	.118	.110	.477,-1	.272,-1	.442,-1
54	.139	.157	.427,-1	.393,-1	.251,-1
55	.144	.171	.373,-1	.460,-1	-.145,-2
56	.156	.158	.619,-1	.501,-1	-.596,-2
57	.139	.155	.794,-1	.568,-1	.150,-1
58	.130	.159	.770,-1	.544,-1	.291,-1
59	.109	.148	.689,-1	.704,-1	.464,-1
60	.121	.149	.567,-1	.108	.511,-1

Run No. 54; v component

	Anemometer Position Number				
K	1	2	3	4	5
00	1.000	1.000	1.000	1.000	1.000
01	.300	.347	.214	.416	.228
02	.127	.221	.157	.250	.100
03	.105	.184	.173	.139	.144
04	.110	.111	.141	.129	.100
05	.108	.119	.124	.117	.685,-1
06	.863,-1	.858,-1	.111	.139	.492,-1
07	.863,-1	.981,-1	.149	.134	.925,-1
08	.828,-1	.663,-1	.739,-1	.117	.508,-1
09	.779,-1	.105	.674,-1	.599,-1	.764,-1
10	.775,-1	.655,-1	.110	.166,-1	.268,-1
11	.107	.776,-1	.585,-1	.291,-1	.670,-1
12	.618,-1	.781,-1	.920,-1	.804,-1	.[illegible],-1
13	.195,-1	.677,-1	.879,-1	.[illegible],-1	.[illegible],-1
14	.384,-1	.525,-1	.768,-1	.[illegible],-1	.[illegible],-1
15	.755,-1	.828,-1	.812,-1	.435,-1	.582,-1
16	.105	.118	.637,-1	.414,-1	.775,-1
17	.133	.748,-1	.599,-1	.133,-1	.[illegible],-1
18	.100	.958,-1	.877,-1	.294,-1	.225,-1
19	.583,-1	.113	.132	.275,-1	.201,-1
20	.564,-1	.955,-1	.913,-1	.[illegible],-1	.695,-1
21	.902,-1	.958,-1	.107	.104	.619,-1
22	.961,-1	.950,-1	.[illegible],-1	.103	.[illegible],-1
23	.956,-1	.[illegible],-1	.[illegible],-1	.772,-1	.[illegible],-1
24	.819,-1	.804,-1	.104,-1	.987,-1	.110
25	.858,-2	.739,-1	.[illegible],-1	.722,-1	.615,-1
26	.371,-1	.470,-1	.841,-1	.810,-1	.772,-1
27	.838,-1	.362,-1	.855,-1	.772,-1	.102
28	.613,-1	.608,-1	.560,-1	.816,-1	.717,-1
29	.814,-1	.121	.440,-1	.804,-1	.100
30	.755,-1	.132	.812,-1	.110	.915,-1
31	.618,-1	.683,-1	.612,-1	.121	.644,-1
32	.118	.701,-1	.929,-1	.156	.[illegible],-1
33	.534,-1	.719,-1	.116	.157	.814,-1
34	.426,-1	.900,-1	.120	.115	.[illegible],-1
35	.544,-1	.773,-1	.579,-1	.867,-1	.[illegible],-1
36	.240,-1	.818,-1	.112	.106	.115
37	.333,-1	.850,-1	.870,-1	.105	.705,-1
38	.390,-1	.114	.108	.112	.611,-1
39	.667,-1	.114	.042,-1	.[illegible],-1	.[illegible],-1
40	.696,-1	.784,-1	.107	.842,-1	.109
41	.647,-1	.102	.877,-1	.[illegible],-1	.[illegible],-1
42	.931,-1	.950,-1	.118	.111	.[illegible],-1
43	.637,-1	.132	.117	.734,-1	.[illegible],-1
44	.224,-1	.108	.664,-1	.975,-1	.[illegible],-1
45	.327,-1	.160	.849,-1	.[illegible],-1	.626,-1
46	.327,-1	.152	.117	.705,-1	.[illegible],-1
47	.814,-1	.106	.122	.[illegible],-1	.855,-1
48	.618,-1	.134	.126	.546,-1	.[illegible],-1
49	.413,-1	.108	.891,-1	.625,-1	.[illegible],-1
50	.809,-1	.148	.797,-1	.297,-1	.[illegible],-1
51	.814,-1	.113	.108	.341,-1	.[illegible],-1
52	.632,-1	.127	.841,-1	.451,-1	.[illegible],-1
53	.107	.108	.[illegible],-1	.741,-1	.[illegible],-1
54	.608,-1	.113	.[illegible],-1	.[illegible],-1	.[illegible],-1
55	.824,-1	.[illegible],-1	.712,-1	.147	.[illegible],-1
56	.995,-1	.[illegible],-1	.797,-1	.161	.105
57	.481,-1	.103	.110	.102	.[illegible],-1
58	.623,-1	.113	.[illegible],-1	.[illegible],-1	.[illegible],-1
59	.139,-1	.148	.115	.[illegible],-1	.107
60	.863,-1	.151	.128	.747,-1	.[illegible],-1

Run No. 54; w component

K	Anemometer Position Number 1	2	3	4	5
00	1.000	1.000	.000	1.000	1.000
01	.[illegible],-1	.[illegible],-1	.[illegible],-1	.[illegible],-1	.100
02	.112,-1	.[illegible],-1	.[illegible],-1	.[illegible],-1	.[illegible],-1
03	.[illegible],-	.[illegible],-2	.[illegible],-1	.[illegible],-1	.[illegible],-1
04	.[illegible],-1	.[illegible],-1	.[illegible]	.[illegible],-1	.[illegible],-1
05	.[illegible],-1	-.[illegible],-1	-.[illegible],-1	.[illegible],-1	.[illegible],-1
06	-.[illegible],-1	-.[illegible],-1	-.[illegible],-2	.[illegible],-1	.[illegible],-2
07	-.[illegible],-1	.[illegible],-1	.[illegible],-1	-.[illegible],-1	.[illegible],-1
08	-.[illegible],-2	.[illegible],-1	.[illegible],-1	.[illegible],-1	-.[illegible],-2
09	.[illegible],-1	.[illegible],-1	-.[illegible],-1	-.[illegible],-2	.[illegible],-2
10	-.[illegible],-1	.[illegible],-1	-.[illegible],-1	.[illegible],-1	-.[illegible],-1
11	-.[illegible],-1	.[illegible],-2	.[illegible],-1	-.[illegible],-1	.[illegible],-1
12	-.[illegible],-2	-.[illegible],-1	.[illegible],-1	.[illegible],-1	.[illegible],-1
13	.[illegible],-1	-.[illegible],-1	.[illegible],-1	.[illegible],-1	-.[illegible],-1
14	-.[illegible],-1	-.[illegible],-1	.[illegible],-1	.[illegible],-2	-.[illegible],-1
15	.[illegible],-1	.[illegible],-1	.[illegible],-1	.[illegible],-1	-.[illegible],-1
16	.[illegible],-2	.[illegible],-2	-.[illegible],-1	.[illegible],-1	-.[illegible],-1
17	-.[illegible],-1	-.[illegible],-1	-.[illegible],-1	-.[illegible],-1	-.[illegible],-1
18	.[illegible],-1	-.[illegible],-1	.[illegible],-2	-.[illegible],-1	-.[illegible],-2
19	-.[illegible],-1	.[illegible],-1	.[illegible],-1	-.[illegible],-1	.[illegible],-2
20	-.[illegible],-2	.[illegible],-1	.[illegible],-1	-.[illegible],-1	-.[illegible],-2
21	.[illegible],-2	-.[illegible],-1	.[illegible],-2	-.[illegible],-2	-.[illegible],-1
22	.[illegible],-1	.[illegible],-1	.[illegible],-2	.[illegible],-1	.[illegible],-1
23	.[illegible],-2	-.[illegible],-1	-.[illegible],-1	-.[illegible],-2	.[illegible],-1
24	-.[illegible],-2	.[illegible],-2	.[illegible],-2	-.[illegible],-1	.[illegible],-1
25	-.[illegible],-1	.[illegible],-1	.[illegible],-1	-.[illegible],-1	-.[illegible],-1
26	-.[illegible],-1	.[illegible],-1	.[illegible],-1	-.[illegible],-1	.[illegible],-1
27	.[illegible],-2	.[illegible],-1	.[illegible],-2	.[illegible],-2	.[illegible],-2
28	-.[illegible],-1	.[illegible],-1	-.[illegible],-2	-.[illegible],-2	-.[illegible],-1
29	.[illegible],-1	-.[illegible],-1	.[illegible],-1	.[illegible],-2	-.[illegible],-2
30	.[illegible],-1	-.[illegible],-1	-.[illegible],-1	.[illegible],-1	.[illegible],-1
31	-.[illegible],-2	.[illegible],-1	-.[illegible],-1	.[illegible],-2	.[illegible],-2
32	-.[illegible],-1	-.[illegible],-1	-.[illegible],-1	-.[illegible],-1	.[illegible],-1
33	.[illegible],-1	.[illegible],-1	.[illegible],-1	-.[illegible],-1	-.[illegible],-1
34	-.[illegible],-1	-.[illegible],-1	-.[illegible],-1	.[illegible],-1	-.[illegible],-1
35	-.[illegible],-1	.[illegible],-1	.[illegible],-2	.[illegible],-1	.[illegible],-1
36	-.[illegible],-1	-.[illegible],-1	.[illegible],-1	-.[illegible],-2	-.[illegible],-1
37	.[illegible],-2	.[illegible],-1	-.[illegible],-2	-.[illegible],-1	.[illegible],-2
38	.[illegible],-2	-.[illegible],-1	.[illegible],-2	-.[illegible],-1	.[illegible],-1
39	-.[illegible],-1	-.[illegible],-2	-.[illegible],-1	-.[illegible],-2	.[illegible],-1
40	.[illegible],-1	-.[illegible],-1	.[illegible],-2	-.[illegible],-1	-.[illegible],-2
41	-.[illegible],-1	-.[illegible],-1	.[illegible],-1	-.[illegible],-1	.[illegible],-1
42	.[illegible],-1	-.[illegible],-1	-.[illegible],-1	.[illegible],-1	.[illegible],-1
43	-.[illegible],-2	-.[illegible],-1	.[illegible],-2	-.[illegible],-2	-.[illegible],-2
44	-.[illegible],-1	-.[illegible],-2	-.[illegible],-1	-.[illegible],-2	-.[illegible],-1
45	-.[illegible],-1	.[illegible],-1	.[illegible],-2	.[illegible],-1	.[illegible],-1
46	-.[illegible],-1	-.[illegible],-1	-.[illegible],-1	.[illegible],-2	.[illegible],-1
47	-.[illegible],-1	.[illegible],-1	-.[illegible],-1	.[illegible],-1	.[illegible],-1
48	-.[illegible],-2	.[illegible],-1	-.[illegible],-1	-.[illegible],-1	.[illegible],-1
49	-.[illegible],-2	-.[illegible],-1	.[illegible],-2	-.[illegible],-1	.[illegible],-1
50	-.[illegible],-1	.[illegible],-1	-.[illegible],-1	-.[illegible],-1	.[illegible],-1
51	.[illegible],-2	.[illegible],-1	-.[illegible],-2	-.[illegible],-1	-.[illegible],-1
52	.[illegible],-1	-.[illegible],-2	.[illegible],-1	-.[illegible],-1	-.[illegible],-1
53	.[illegible],-1	.[illegible],-2	.[illegible],-2	.[illegible],-1	-.[illegible],-2
54	.[illegible],-1	.[illegible],-2	.[illegible],-1	-.[illegible],-1	-.[illegible],-1
55	.[illegible],-1	.[illegible],-1	-.[illegible],-1	-.[illegible],-1	-.[illegible],-1
56	.[illegible],-1	-.[illegible],-1	.[illegible],-1	.[illegible],-1	-.[illegible],-1
57	-.[illegible],-2	.[illegible],-1	-.[illegible],-2	-.[illegible],-1	.[illegible],-2
58	.[illegible],-2	-.[illegible],-1	.[illegible],-1	-.[illegible],-1	.[illegible],-1
59	-.[illegible],-1	.[illegible],-1	-.[illegible],-1	-.[illegible],-1	-.[illegible],-1
60	-.[illegible],-2	-.[illegible],-1	-.[illegible],-1	-.[illegible],-1	-.[illegible],-1

Run No. 55; u component

K	Anemometer Position Number 1	2	3	4	5
00	1.000	1.000	1.000	1.000	1.000
01	.698	.698	.792	.699	.657
02	.532	.528	.666	.542	.497
03	.443	.435	.608	.455	.425
04	.375	.381	.572	.375	.366
05	.297	.323	.527	.305	.290
06	.259	.296	.505	.262	.224
07	.240	.280	.466	.199	.179
08	.207	.276	.446	.147	.140
09	.200	.242	.410	.973,-1	.144
10	.175	.218	.385	.629,-1	.982,-1
11	.155	.199	.380	.484,-1	.808,-1
12	.118	.191	.364	.359,-1	.760,-1
13	.102	.161	.375	-.973,-2	.882,-1
14	.890,-1	.144	.401	-.212,-1	.805,-1
15	.871,-1	.122	.356	-.242,-1	.126
16	.617,-1	.892,-1	.354	-.247,-1	.141
17	.748,-1	.866,-1	.351	-.226,-1	.114
18	.451,-1	.161,-1	.333	-.457,-2	.122
19	.479,-1	.106,-1	.316	.359,-2	.102
20	.578,-1	.402,-2	.284	.111,-1	.892,-1
21	.684,-1	.715,-2	.284	-.182,-1	.741,-1
22	.472,-1	.571,-2	.279	-.327,-1	.665,-1
23	.546,-1	-.566,-2	.274	-.301,-1	.571,-1
24	.562,-1	-.192,-1	.275	-.399,-1	.559,-1
25	.205,-1	-.311,-1	.264	-.581,-1	.134,-1
26	.288,-1	-.364,-1	.270	-.512,-1	.144,-1
27	.210,-1	-.360,-2	.284	-.829,-1	.436,-1
28	.258,-1	-.737,-2	.290	-.105	.627,-1
29	.496,-2	-.110,-1	.280	-.757,-1	.579,-1
30	-.261,-1	-.686,-2	.269	-.775,-1	.286,-1
31	-.242,-1	-.505,-2	.268	-.995,-1	.283,-1
32	-.357,-1	-.198,-1	.284	-.849,-1	.496,-1
33	-.512,-1	-.584,-1	.286	-.545,-1	.595,-1
34	-.371,-1	-.821,-1	.289	-.956,-1	.210,-1
35	-.253,-1	-.601,-1	.299	-.434,-1	-.592,-2
36	-.164,-1	-.478,-1	.308	.600,-3	.774,-3
37	-.899,-1	-.456,-1	.308	.849,-2	.191,-1
38	-.387,-1	-.552,-1	.293	-.218,-2	-.241,-2
39	-.272,-1	-.248,-1	.273	-.441,-2	-.112,-1
40	-.189,-1	-.149,-1	.263	-.218,-1	-.181,-1
41	-.272,-1	-.156,-1	.260	-.467,-2	-.104,-1
42	-.327,-1	-.319,-1	.250	-.162,-1	.923,-2
43	-.993,-2	-.448,-1	.245	.680,-3	.174,-1
44	-.299,-1	-.692,-1	.258	.028,-1	.447,-1
45	-.445,-1	-.869,-1	.253	.440,-1	.415,-1
46	-.537,-1	-.860,-1	.266	.513,-1	.466,-1
47	-.747,-1	-.932,-1	.257	.638,-1	.645,-1
48	-.100	-.885,-1	.248	.945,-1	.686,-1
49	-.100	-.881,-1	.243	.123	.500,-1
50	-.790,-1	-.876,-1	.230	.147	.558,-1
51	-.689,-1	-.103	.236	.154	.367,-1
52	-.638,-1	-.922,-1	.250	.135	.223,-1
53	-.539,-1	-.929,-1	.242	.151	.854,-2
54	-.496,-1	-.106	.255	.116	-.438,-2
55	-.385,-1	-.104	.261	.140	-.330,-2
56	-.303,-1	-.905,-1	.242	.125	-.396,-2
57	-.131,-1	-.799,-1	.237	.989,-1	-.135,-1
58	-.170,-1	-.825,-1	.241	.642,-1	-.134,-1
59	-.228,-1	-.635,-1	.250	.617,-1	.314,-2
60	-.106,-1	-.575,-1	.269	.548,-1	-.243,-2

Run No. 55; v component

K	Anemometer Position Number 1	2	3	4	5
00	1.000	1.000	1.000	1.000	1.000
01	.311	.259	.320	.376	.311
02	.161	.217	.240	.244	.192
03	.119	.149	.173	.211	.118
04	.450,-1	.107	.157	.171	.748,-1
05	.376,-1	.595,-1	.993,-1	.138	.115
06	.110	.741,-1	.125	.130	.998,-1
07	.111	.273,-1	.586,-1	.972,-1	.970,-1
08	.693,-1	.675,-1	.107	.116	.487,-1
09	.479,-1	-.125,-1	.251,-1	.104	.370,-1
10	.305,-1	.568,-2	.126,-1	.102	.611,-1
11	.199,-1	.549,-1	.612,-1	.780,-1	.107
12	-.690,-2	.332,-1	.355,-1	.685,-1	.716,-1
13	.183,-1	-.896,-2	-.896,-2	.678,-1	.857,-1
14	.320,-1	.169,-1	.241,-1	.995,-1	.725,-1
15	-.330,-2	.156,-1	.473,-1	.707,-1	.582,-1
16	.250,-1	-.509,-1	-.101,-1	.531,-1	.407,-1
17	.137,-1	.222,-1	.225,-1	.450,-1	.158,-2
18	.605,-1	-.179,-1	.300,-1	.348,-1	-.958,-2
19	.399,-1	.484,-1	.658,-1	.649,-1	.156,-1
20	.425,-1	.131,-1	.605,-1	.298,-1	.300,-1
21	.201,-1	.154,-1	.491,-1	.619,-1	.379,-1
22	-.193,-1	-.176,-1	.885,-2	.544,-1	.596,-1
23	.131,-1	-.220,-1	.174,-1	.585,-1	.597,-1
24	.298,-1	.484,-1	.599,-1	.391,-1	.713,-1
25	.288,-1	.397,-1	.797,-1	.248,-1	.770,-1
26	.316,-1	.541,-1	.754,-1	.141,-1	.110
27	.647,-1	.346,-1	.594,-1	.356,-1	.249,-1
28	.227,-1	.289,-1	.264,-1	.426,-1	.521,-1
29	.268,-1	.106,-1	.210,-1	.606,-1	.753,-1
30	.162,-1	-.195,-1	.104,-1	.365,-1	-.149,-1
31	.745,-2	-.112,-1	.277,-1	.544,-1	-.165,-1
32	.230,-1	.642,-2	.221,-1	.804,-1	-.235,-1
33	.575,-1	-.238,-1	.157,-1	.941,-1	-.308,-1
34	.902,-1	.251,-1	.612,-1	.113	-.312,-1
35	.938,-1	.515,-1	.715,-1	.132	-.176,-1
36	.876,-1	.516,-1	.626,-1	.124	-.399,-1
37	.353,-1	-.179,-1	-.598,-2	.133	-.866,-2
38	.853,-2	.243,-1	.395,-1	.124	-.576,-2
39	.631,-1	.700,-1	.872,-1	.127	-.283,-1
40	.542,-1	.854,-1	.790,-1	.137	.295,-1
41	.487,-1	.719,-1	.957,-1	.106	-.184,-1
42	.771,-2	.414,-1	.794,-1	.110	.307,-1
43	.196,-1	.503,-1	.616,-1	.121	-.164,-1
44	.156,-1	-.311,-1	.101,-1	.907,-1	-.770,-2
45	.614,-2	-.852,-2	.234,-1	.904,-1	.429,-1
46	-.259,-1	.196,-1	.391,-1	.876,-1	.675,-1
47	-.117,-1	.600,-3	.961,-2	.754,-1	.880,-1
48	-.794,-2	-.119,-1	.130,-1	.769,-1	.890,-1
49	-.152,-1	.152,-1	.359,-1	.108	.484,-1
50	.162,-1	.145,-1	.210,-1	.980,-1	.350,-1
51	.722,-2	.178,-1	-.922,-2	.706,-1	.697,-1
52	412,-1	.225,-1	.318,-1	.656,-1	.113
53	.178,-1	.651,-1	.537,-1	.643,-1	.125
54	.137,-2	.111,-2	.112,-1	.985,-1	.151
55	.285,-1	.522,-2	-.783,-2	.769,-1	.130
56	.412,-1	-.641,-2	-.145,-2	.419,-1	.639,-1
57	.641,-1	.516,-1	.505,-1	.406,-1	.656,-1
58	.637,-1	-.386,-2	.217,-1	.376,-1	.288,-1
59	.752,-1	.349,-2	.979,-2	.480,-1	.491,-1
60	.467,-1	.330,-1	.626,-1	.615,-1	.211,-1

Run No. 55; W component

K	Anemometer Position Number 1	2	3	4	5
00	1.000	1.000	1.000	1.000	1.000
01	.507,-1	.512,-1	.168	.114	.874,-1
02	.588,-1	.819,-1	.395,-1	.223,-1	.172,-1
03	.380,-1	.668,-2	-.564,-2	.212,-1	.136,-1
04	.452,-1	.245,-1	.730,-1	.488,-1	.211,-1
05	-.312,-1	-.699,-2	-.313,-1	-.140,-1	.153,-1
06	.283,-1	-.334,-1	-.187,-2	.563,-1	.839,-2
07	.387,-2	-.155,-1	.216,-1	-.610,-2	-.942,-2
08	.200,-1	.240,-1	-.561,-2	.767,-2	.140,-3
09	.206,-2	-.447,-2	.516,-3	-.696,-2	-.237,-2
10	.504,-1	-.401,-1	-.750,-2	.117,-1	-.754,-1
11	-.604,-1	-.165,-1	-.205,-1	.610,-2	-.241,-1
12	-.435,-1	-.280,-1	.186,-1	-.212,-1	.225,-1
13	.747,-2	.240,-1	.136,-1	-.342,-2	.206,-1
14	-.544,-1	.617,-2	-.264,-1	-.447,-1	-.350,-2
15	.951,-2	.426,-1	-.822,-1	.476,-1	.307,-1
16	-.583,-1	-.466,-1	.520,-1	.124,-1	.416,-1
17	-.994,-2	.151,-1	.664,-1	-.453,-2	.647,-1
18	-.802,-1	-.397,-1	.407,-1	-.195,-1	.112,-1
19	-.221,-1	-.269,-1	.402,-1	-.428,-1	.120,-1
20	.442,-1	.229,-1	.517,-1	.268,-1	-.150,-1
21	.507,-1	.855,-2	.588,-3	.948,-1	.179,-1
22	-.957,-2	.225,-1	-.180,-1	.204,-1	-.918,-2
23	.449,-2	-.156,-1	-.182,-1	.235,-1	.290,-2
24	.233,-1	.137,-1	-.109,-1	-.166,-1	.117,-1
25	-.131,-1	.102,-1	.788,-1	.265,-1	-.162,-1
26	-.174,-1	-.115,-1	.423,-2	-.129,-1	-.490,-1
27	-.483,-2	.115,-1	-.228,-1	.124,-1	-.216,-1
28	-.753,-2	-.440,-1	-.822,-2	-.116,-1	.531,-1
29	.579,-1	.299,-2	-.967,-2	-.749,-2	-.754,-2
30	.291,-1	.684,-4	.536,-2	-.158,-1	.212,-1
31	.413,-2	-.452,-1	-.218,-1	-.119,-1	.255,-1
32	.510,-1	-.378,-1	-.116,-1	.112,-1	.260,-1
33	.340,-1	-.366,-1	-.216,-1	.197,-2	.220,-1
34	-.772,-2	-.209,-1	.412,-1	-.597,-2	.249,-1
35	.344,-1	-.606,-1	.748,-1	-.452,-2	.180,-2
36	.147,-1	-.502,-1	.455,-1	.526,-1	.196,-2
37	.120,-1	-.516,-1	.317,-1	-.657,-3	-.228,-1
38	-.290,-1	-.270,-1	.704,-1	-.128,-1	-.286,-1
39	-.289,-1	.214,-1	.206,-1	-.194,-1	.248,-1
40	-.272,-1	-.358,-1	-.239,-1	-.573,-1	-.614,-1
41	-.183,-2	.128,-1	-.862,-2	-.151,-1	-.138,-1
42	.127,-1	-.165,-1	-.743,-1	.692,-2	-.291,-1
43	.522,-2	.223,-1	-.247,-1	-.153,-1	-.254,-2
44	.422,-1	-.534,-2	.121,-1	-.226,-1	.174,-1
45	.122,-1	.228,-1	.226,-2	.657,-2	.114,-1
46	-.193,-1	.125,-1	.183,-1	.122,-1	.228,-2
47	-.433,-1	.351,-1	.349,-1	-.307,-1	.298,-2
48	-.680,-1	.332,-1	.180,-1	-.198,-1	-.870,-2
49	-.587,-1	-.281,-1	-.967,-2	.542,-2	.386,-1
50	.153,-1	-.128,-1	-.155,-1	.367,-1	.441,-1
51	-.667,-1	-.820,-1	-.243,-2	.120,-1	.171,-1
52	-.478,-2	-.534,-1	-.105,-1	-.486,-1	.551,-1
53	-.895,-2	-.170,-2	-.678,-2	.210,-2	-.346,-1
54	.199,-2	.150,-2	.497,-2	-.375,-1	.111,-1
55	-.512,-1	-.106,-1	-.243,-1	-.616,-2	.240,-1
56	.130,-1	-.122,-1	-.405,-2	.209,-1	.200,-2
57	-.191,-1	.136,-1	.163,-1	-.402,-2	-.184,-1
58	.796,-2	.493,-1	-.355,-1	-.495,-1	-.121,-1
59	-.153,-1	.210,-1	-.441,-2	.516,-1	.412,-1
60	-.524,-2	-.762,-2	.120,-1	-.259,-1	-.429,-1

Run No. 56; u component

	Anemometer Position Number				
K	1	2	3	4	5
00	1.000	1.000	1.000	1.000	1.000
01	.669	.653	.749	.697	.717
02	.465	.444	.593	.498	.537
03	.374	.335	.499	.381	.429
04	.300	.267	.428	.339	.364
05	.253	.235	.376	.312	.282
06	.206	.205	.356	.245	.217
07	.153	.157	.343	.204	.171
08	.926,-1	.123	.300	.159	.156
09	.689,-1	.819,-1	.283	.153	.132
10	.804,-1	.637,-1	.255	.139	.107
11	.724,-1	.353,-1	.206	.118	.802,-1
12	.407,-1	.416,-1	.178	.976,-1	.479,-1
13	.296,-1	.624,-1	.170	.788,-1	.327,-1
14	.228,-1	.404,-1	.162	.756,-1	.210,-1
15	.278,-1	.406,-1	.145	.685,-1	.248,-1
16	.226,-1	.357,-1	.105	.803,-1	.412,-1
17	.293,-1	.311,-1	.778,-1	.723,-1	.614,-1
18	.393,-1	.452,-1	.543,-1	.639,-1	.484,-1
19	.352,-1	.241,-1	.512,-1	.559,-1	.342,-1
20	.474,-1	.263,-2	.357,-1	.412,-1	.120,-1
21	.637,-1	-.596,-2	.429,-1	.646,-1	.175,-1
22	.474,-1	.227,-2	.583,-1	.662,-1	-.921,-2
23	.633,-2	.659,-3	.730,-1	.771,-1	-.273,-1
24	-.344,-3	.520,-2	.650,-1	.763,-1	-.376,-1
25	.101,-2	-.592,-2	.579,-1	.943,-1	-.274,-1
26	.491,-2	.141,-1	.612,-1	.100	-.295,-1
27	-.243,-2	.133,-1	.653,-1	.911,-1	-.200,-1
28	-.909,-2	.213,-1	.608,-1	.863,-1	-.135,-1
29	-.136,-1	.247,-1	.661,-1	.952,-1	-.606,-2
30	-.989,-2	.198,-1	.665,-1	.998,-1	.124,-2
31	-.374,-1	.217,-1	.534,-1	.970,-1	-.121,-1
32	-.457,-1	.313,-1	.556,-1	.112	-.825,-2
33	-.302,-1	.108,-1	.562,-1	.122	-.255,-1
34	-.333,-1	.128,-1	.604,-1	.116	-.770,-2
35	-.328,-1	.275,-1	.673,-1	.101	.162,-1
36	.669,-3	.729,-2	.104	.973,-1	.165,-2
37	.112,-1	-.241,-1	.119	.830,-1	-.109,-1
38	.667,-2	-.512,-1	.127	.533,-1	.661,-2
39	.160,-2	-.432,-1	.136	.521,-1	.873,-2
40	.402,-2	-.297,-1	.120	.432,-1	-.633,-2
41	-.613,-2	-.198,-1	.974,-1	.482,-1	-.271,-1
42	-.213,-1	.198,-2	.102	.365,-1	-.270,-1
43	.576,-2	.440,-2	.121	.309,-1	-.248,-1
44	-.791,-2	-.231,-1	.119	.482,-1	-.326,-1
45	-.170,-1	-.235,-1	.113	.820,-1	-.336,-1
46	-.185,-1	.166,-2	.117	.104	-.306,-1
47	-.530,-2	.412,-1	.127	.111	-.175,-1
48	-.103,-1	.601,-1	.131	.118	-.295,-1
49	.719,-4	.659,-1	.135	.922,-1	.217,-3
50	-.269,-1	.474,-2	.144	.976,-1	-.325,-2
51	-.615,-1	-.160,-1	.156	.933,-1	.185,-1
52	-.669,-1	-.112,-1	.183	.817,-1	.533,-1
53	-.667,-1	-.203,-1	.183	.561,-1	.598,-1
54	-.456,-1	-.773,-2	.181	.674,-1	.602,-1
55	-.213,-1	.922,-2	.184	.570,-1	.778,-1
56	-.300,-1	.337,-1	.185	.433,-1	.113
57	-.280,-1	.263,-1	.190	.392,-1	.139
58	.819,-2	.313,-1	.201	.420,-1	.129
59	.211,-1	.498,-1	.219	.562,-1	.119
60	.507,-1	.412,-1	.224	.597,-1	.136

Run No. 56; v component

K	Anemometer Position Number 1	2	3	4	5
00	1.000	1.000	1.000	1.000	1.000
01	.537	.536	.578	.670	.624
02	.471	.451	.465	.524	.520
03	.436	.458	.443	.465	.470
04	.432	.422	.431	.427	.453
05	.390	.425	.412	.437	.429
06	.400	.422	.391	.460	.427
07	.392	.405	.381	.463	.427
08	.402	.379	.374	.468	.412
09	.429	.402	.358	.458	.376
10	.417	.415	.381	.445	.348
11	.400	.412	.405	.458	.361
12	.363	.389	.393	.463	.370
13	.400	.379	.419	.453	.378
14	.380	.369	.388	.458	.380
15	.388	.359	.397	.448	.381
16	.363	.353	.366	.427	.378
17	.392	.363	.381	.427	.357
18	.413	.376	.386	.425	.370
19	.394	.363	.378	.432	.359
20	.400	.353	.358	.453	.359
21	.398	.373	.342	.448	.365
22	.380	.373	.368	.442	.361
23	.402	.390	.350	.450	.370
24	.407	.373	.340	.450	.393
25	.367	.393	.350	.442	.397
26	.384	.350	.371	.427	.365
27	.386	.356	.388	.445	.370
28	.357	.366	.400	.407	.340
29	.369	.356	.378	.396	.348
30	.392	.389	.356	.402	.340
31	.349	.359	.345	.412	.329
32	.355	.356	.338	.430	.335
33	.357	.386	.362	.422	.368
34	.376	.346	.388	.422	.331
35	.357	.350	.368	.404	.325
36	.396	.386	.361	.384	.312
37	.386	.376	.374	.379	.316
38	.346	.363	.374	.384	.306
39	.326	.343	.373	.363	.297
40	.359	.346	.376	.376	.274
41	.336	.353	.358	.371	.274
42	.344	.330	.335	.391	.288
43	.344	.337	.321	.306	.295
44	.353	.320	.315	.376	.310
45	.384	.346	.325	.355	.282
46	.384	.359	.350	.384	.284
47	.344	.359	.342	.386	.310
48	.367	.369	.374	.404	.306
49	.344	.320	.362	.409	.303
50	.357	.333	.328	.373	.303
51	.365	.343	.364	.350	.321
52	.353	.288	.340	.361	.303
53	.340	.288	.328	.381	.301
54	.322	.333	.297	.407	.299
55	.328	.287	.321	.409	.335
56	.286	.282	.284	.376	.316
57	.286	.302	.296	.345	.318
58	.301	.279	.304	.322	.308
59	.324	.299	.321	.322	.303
60	.311	.297	.313	.338	.301

Run No. 56, w component

K	Anemometer Position Number 1	2	3	4	5
00	1.000	1.000	1.000	1.000	1.000
01	.421,-1	.103	.195	.137	.942,-1
02	-.158,-1	.396,-1	.122	.111	.768,-1
03	-.988,-2	-.880,-2	.187,-1	.659,-1	.485,-1
04	.550,-1	-.472,-2	-.203,-1	-.901,-2	.298,-1
05	-.453,-1	-.200,-1	.403,-1	.292,-1	.184,-1
06	-.303,-1	-.194,-1	-.198,-1	.821,-1	-.605,-2
07	-.769,-2	-.271,-1	-.654,-2	.497,-1	-.407,-2
08	-.332,-1	-.313,-1	-.290,-1	.678,-1	.168,-1
09	-.638,-1	.245,-1	-.392,-1	.835,-1	-.153,-1
10	.514,-1	.754,-2	-.649,-1	.221,-2	-.163,-1
11	-.174,-1	.865,-2	-.489,-1	.362,-1	-.244,-1
12	.158,-2	-.303,-2	-.463,-1	.392,-1	-.249,-1
13	-.151,-1	.154,-1	-.652,-1	.891,-2	-.518,-1
14	-.311,-2	.121,-1	-.814,-1	.102,-1	-.322,-1
15	-.210,-1	-.304,-1	-.349,-1	-.230,-1	-.720,-2
16	.481,-1	-.411,-1	-.658,-1	.189,-1	-.245,-1
17	-.124,-1	-.328,-1	.313,-1	.345,-1	.206,-1
18	-.430,-1	-.323,-1	-.232,-2	.482,-1	-.859,-2
19	-.994,-2	-.321,-1	.203,-1	.148,-1	.445,-2
20	-.138,-1	-.143,-1	-.793,-1	-.301,-1	.113,-1
21	.614,-2	.313,-1	-.190,-1	.385,-2	.777,-2
22	.307,-1	.849,-2	-.247,-1	-.160,-1	.285,-2
23	-.415,-1	-.128,-1	-.139,-1	.193,-1	.171,-1
24	.719,-1	.114,-1	.379,-1	.725,-1	-.213,-2
25	-.831,-2	.309,-1	.668,-2	-.305,-1	.705,-2
26	.330,-1	.183,-1	.206,-1	.606,-1	.199,-3
27	.278,-1	-.112,-1	-.182,-2	.157,-1	-.172,-1
28	.428,-1	.126,-1	.202,-1	.190,-1	-.152,-1
29	-.631,-1	-.203,-1	.189,-1	-.183,-1	-.958,-2
30	-.850,-2	-.271,-2	.649,-3	-.140,-1	-.133,-1
31	.192,-1	.254,-1	.128,-1	-.294,-1	.465,-1
32	-.189,-1	.120,-1	-.148,-1	.237,-1	-.103,-1
33	-.684,-1	.893,-4	-.287,-1	.266,-1	-.654,-3
34	-.314,-1	.584,-2	-.497,-1	-.219,-2	.343,-1
35	-.139,-1	-.281,-1	-.480,-1	.237,-1	.141,-1
36	.619,-2	-.149,-1	-.478,-1	-.851,-2	.394,-1
37	-.505,-1	-.229,-1	-.469,-1	-.175,-3	-.248,-1
38	-.118,-1	-.482,-1	-.664,-1	.317,-1	.633,-1
39	.453,-1	-.133,-1	-.466,-1	.132,-2	-.724,-2
40	.483,-1	.188,-1	-.224,-1	.187,-1	-.356,-1
41	.355,-2	.395,-1	.122,-1	-.282,-1	.227,-1
42	.547,-1	.237,-1	-.390,-1	.112,-1	-.142,-1
43	.283,-2	.175,-1	.577,-1	-.193,-1	-.193,-1
44	-.644,-1	.184,-1	.334,-1	.191,-1	-.319,-1
45	-.545,-1	-.351,-1	.101,-1	-.320,-1	-.917,-1
46	.204,-2	-.159,-1	.344,-1	.730,-2	-.278,-1
47	-.271,-1	.238,-2	-.945,-2	-.350,-1	-.288,-1
48	-.553,-1	.213,-2	.437,-1	-.657,-1	-.401,-1
49	-.819,-3	.157,-1	-.668,-2	.583,-2	-.150,-1
50	-.108,-1	.191,-1	-.228,-1	-.247,-1	-.356,-1
51	.969,-2	.143,-1	.257,-2	-.470,-1	.262,-1
52	.234,-1	-.260,-2	-.752,-2	-.396,-1	.208,-1
53	-.574,-2	.538,-1	.972,-2	.336,-1	.942,-2
54	.155,-1	.363,-2	.654,-3	.322,-1	.493,-1
55	.599,-1	-.175,-1	.731,-3	.286,-1	.256,-1
56	-.330,-1	-.197,-1	.800,-3	.388,-1	.577,-1
57	.656,-2	-.174,-1	.183,-1	.362,-2	-.432,-2
58	-.362,-1	-.220,-1	.101,-1	-.571,-2	.159,-1
59	.273,-1	.146,-1	.807,-2	.421,-2	-.132,-1
60	-.439,-1	.115,-1	.199,-2	-.239,-1	-.120,-1

Run No. 58; u component

K	Anemometer Position Number 1	2	3	4	5
00	1.000	1.000	1.000	1.000	1.000
01	.427	.463	.352	.328	.417
02	.192	.194	.105	.650,-1	.178
03	.925,-1	.127	.851,-1	-.570,-3	.870,-1
04	.695,-1	.843,-1	.580,-1	-.102,-2	.537,-1
05	.105	.458,-1	.266,-1	-.497,-1	.634,-1
06	.620,-1	.540,-1	.191,-1	-.259,-1	.516,-1
07	.101,-1	.419,-1	.350,-1	.889,-3	.539,-1
08	.224,-1	.342,-1	.195,-1	.150,-1	.136,-1
09	.416,-1	.756,-1	.220,-2	.457,-1	.518,-1
10	.223,-1	.398,-1	.120,-1	.627,-1	.855,-1
11	.334,-1	.509,-1	-.427,-1	.153,-1	.125
12	.451,-1	.506,-1	.153,-1	.118,-1	.120
13	.839,-1	.933,-1	.505,-1	.153,-1	.143
14	.710,-1	.712,-1	.115,-1	.920,-2	.105
15	.401,-1	.535,-1	.101,-1	.402,-2	.110
16	.113,-1	.308,-1	.340,-1	-.295,-2	.701,-1
17	.186,-1	.486,-1	.726,-1	.184,-2	.112
18	.219,-1	.630,-1	.173,-1	.142,-1	.111
19	-.989,-3	.568,-1	.272,-2	.100,-1	.793,-1
20	-.206,-1	.570,-1	-.174,-1	.515,-1	.477,-1
21	.143,-1	.416,-1	-.205,-1	.472,-2	.770,-1
22	.958,-2	.380,-1	-.195,-1	-.315,-2	.778,-1
23	.134,-1	.450,-1	-.180,-1	.288,-1	.941,-1
24	.411,-1	.972,-1	-.189,-1	.541,-1	.950,-1
25	.754,-1	.830,-1	-.144,-1	.275,-1	.774,-1
26	.745,-1	.112	.705,-2	-.647,-2	.493,-1
27	.599,-1	.148	.173,-1	-.116,-1	.689,-1
28	.495,-1	.115	.571,-2	.110,-1	.891,-1
29	.739,-1	.101	.474,-1	.357,-1	.369,-1
30	.701,-1	.859,-1	.349,-1	.188,-1	.449,-1
31	-.151,-1	.548,-1	-.283,-1	-.190,-1	.781,-1
32	-.254,-1	.386,+1	.125,-1	.277,-2	.228,-1
33	-.248,-1	.105,-1	.186,-1	-.114,-1	.554,-1
34	.203,-1	-.175,-1	.689,-2	.158,-1	.495,-1
35	.904,-2	-.429,-2	-.878,-2	-.630,-2	.495,-1
36	-.223,-2	.111,-2	.129,-1	.561,-1	.583,-1
37	.347,-1	.154,-1	.709,-2	.237,-1	.107,-1
38	.328,-1	.578,-1	.123,-1	.233,-1	.322,-1
39	.465,-1	.910,-1	-.257,-1	.217,-1	.594,-1
40	.398,-1	.851,-1	-.995,-2	.379,-1	.823,-1
41	.568,-1	.617,-1	.197,-1	.215,-1	.913,-1
42	.785,-1	.190,-1	-.112,-1	-.504,-1	.844,-1
43	.637,-1	.578,-2	-.364,-1	-.816,-2	.685,-1
44	.469,-1	-.373,-1	-.579,-1	.251,-1	.526,-1
45	.522,-1	.158,-2	-.158,-1	.226,-2	.991,-1
46	.646,-1	.102,-1	.164,-1	-.235,-2	.117
47	.962,-1	.177,-1	.374,-1	-.157,-1	.640,-1
48	.464,-1	.186,-1	.429,-1	-.368,-2	.110,-1
49	.383,-2	.391,-1	.403,-1	-.215,-1	.161,-1
50	.509,-1	.663,-1	.550,-1	.125,-1	.483,-1
51	.960,-1	.347,-1	.313,-1	.452,-1	.532,-1
52	.648,-1	.704,-1	.197,-1	.386,-1	.708,-1
53	.375,-1	.517,-1	-.323,-2	.326,-1	.760,-1
54	.672,-1	.640,-1	-.411,-2	.124,-1	.622,-1
55	.405,-1	.532,-1	.474,-1	-.514,-2	.460,-1
56	.520,-1	.406,-1	.126,-1	.116,-1	.435,-1
57	.734,-1	.298,-1	-.693,-2	.945,-2	.456,-1
58	.478,-1	.581,-2	.746,-2	.357,-2	.303,-1
59	.821,-1	-.406,-2	.311,-1	-.147,-1	.311,-1
60	.120,-1	.949,-4	.523,-1	.743,-2	.614,-1



Run No. 58; v component

K	Anemometer Position Number 1	2	3	4	5
00	1.000	1.000	1.000	1.000	1.000
01	.137	.272	.344	.350	.263
02	.874,-1	.925,-1	.174	.202	.169
03	.594,-1	.579,-1	.977,-1	.182	.778,-1
04	.963,-1	.931,-1	.241,-1	.147	.744,-1
05	.951,-1	.668,-1	.430,-1	.103	.606,-1
06	.734,-1	.821,-1	.964,-2	.805,-1	.208,-1
07	.424,-1	.116	.228,-1	.104	.331,-1
08	.116	.143	.423,-1	.819,-1	.181,-1
09	.132	.875,-1	.484,-1	.674,-1	.273,-1
10	.121	.104	.550,-1	.629,-1	-.153,-1
11	.133	.821,-1	.664,-1	.551,-1	-.279,-1
12	.380,-1	.103	.420,-1	.489,-1	-.597,-2
13	.138	.956,-1	-.644,-2	.702,-1	-.237,-1
14	.691,-1	.665,-1	.491,-1	.689,-1	.119,-1
15	.723,-1	.112	.740,-1	.621,-1	.515,-1
16	.950,-1	.126	.430,-1	.911,-1	.411,-1
17	.111	.894,-1	.640,-1	.108	.395,-1
18	.828,-1	.950,-1	.547,-1	.525,-1	.413,-2
19	.918,-1	.625,-1	.869,-1	.747,-1	.221,-1
20	.145	.137	.110	.603,-1	.724,-2
21	.118	.145	.980,-1	.671,-1	.162,-1
22	.977,-1	.841,-1	.937,-1	.585,-1	.202,-1
23	.737,-1	.518,-1	.960,-1	.352,-1	.536,-1
24	.759,-1	.503,-1	.950,-1	.405,-1	.862,-1
25	.643,-1	.575,-1	.921,-1	.660,-1	.865,-1
26	.953,-1	.307,-1	.997,-1	.580,-1	.881,-1
27	.949,-1	.631,-1	.641,-1	.397,-1	.877,-1
28	.118	.122	.688,-1	.467,-1	.192,-1
29	.937,-1	.130	.107	.110	.781,-1
30	.585,-1	.788,-1	.863,-1	.115	.339,-1
31	.720,-1	.615,-1	.131	.554,-1	.496,-1
32	.634,-1	.925,-1	.552,-1	.603,-1	-.307,-1
33	.104	.150	.825,-2	.158	.203,-1
34	.816,-1	.857,-1	.202,-1	.111	.877,-2
35	.115	.356,-1	.276,-1	.629,-1	.382,-1
36	.774,-1	.379,-1	.218,-1	.995,-1	.417,-2
37	.862,-1	.606,-1	.185,-1	.333,-1	.938,-2
38	.727,-1	.916,-1	.390,-1	.883,-1	.315,-1
39	.648,-1	.909,-1	.598,-1	.762,-1	-.195,-1
40	.629,-1	.806,-1	.681,-1	.110	.276,-1
41	.883,-1	.853,-1	.805,-1	.961,-1	.118,-1
42	.946,-1	.706,-1	.864,-1	.843,-1	.321,-1
43	.741,-1	.737,-1	.131	.966,-1	.414,-1
44	.109	.951,-1	.970,-1	.689,-1	.128,-1
45	.622,-1	.105	.650,-1	.841,-1	.319,-2
46	.802,-1	.712,-1	.124	.107	-.638,-2
47	.108	.126	.846,-1	.603,-1	.160,-1
48	.121	.609,-1	.100	.548,-1	.245,-1
49	.105	.984,-1	.873,-1	.366,-1	.610,-1
50	.580,-1	.105	.109	.533,-1	.240,-1
51	.122	.540,-1	.103	.333,-1	-.190,-1
52	.142	.510,-1	.111	.324,-1	.120,-1
53	.108	.131	.727,-1	.292,-1	-.401,-1
54	.841,-1	.120	.698,-1	.872,-2	-.843,-2
55	.111	.372,-1	.698,-1	.321,-1	-.105,-1
56	.767,-1	.385,-1	-.593,-2	.160,-1	-.822,-2
57	.779,-1	.828,-1	.215,-1	-.127,-3	.577,-1
58	.809,-1	.709,-1	.393,-1	.345,-1	.192,-2
59	.713,-1	.130	.145,-2	.381,-1	.497,-1
60	.308,-1	.721,-1	.377,-1	.243,-1	.763,-1

Run No. 58; w component

K	Anemometer Position Number 1	2	3	4	5
00	1.000	1.000	1.000	1.000	1.000
01	-.195,-1	.175,-1	.953,-1	.816,-1	.566,-1
02	-.120,-1	-.126,-1	.185,-1	-.204,-1	.384,-1
03	-.523,-3	-.487,-1	-.356,-1	.541,-2	.134,-1
04	.153,-1	-.236,-1	.896,-2	.434,-1	-.294,-1
05	-.105,-1	.175,-2	.408,-1	-.360,-1	-.876,-2
06	.341,-1	.640,-1	-.269,-1	.320,-1	.184,-1
07	-.149,-1	.330,-1	-.107,-1	-.500,-2	.240,-1
08	-.341,-2	.167,-1	-.188,-1	-.254,-1	-.759,-2
09	.545,-1	.157,-1	.140,-1	.769,-2	-.685,-2
10	.275,-1	-.463,-1	-.105,-1	.907,-3	.154,-1
11	-.111,-1	.207,-1	.296,-1	-.399,-1	-.253,-1
12	.359,-1	-.127,-1	.533,-3	-.337,-1	.340,-1
13	-.243,-1	.131,-1	.122,-1	.225,-1	-.443,-1
14	-.175,-1	.609,-1	.580,-1	-.251,-1	.112,-1
15	.350,-2	.199,-1	.235,-2	.181,-1	-.333,-1
16	.147,-1	-.377,-1	.795,-1	.215,-1	.514,-2
17	.360,-1	-.232,-1	-.545,-4	.782,-3	.311,-1
18	-.110,-1	-.239,-2	.131,-1	.363,-1	.266,-1
19	-.308,-1	-.290,-1	-.193,-1	.844,-2	.597,-1
20	.189,-1	-.798,-2	.216,-1	-.278,-1	.210,-1
21	-.224,-2	.655,-1	-.135,-1	-.320,-1	-.425,-2
22	-.151,-1	-.318,-1	.192,-1	-.135,-1	.346,-1
23	-.401,-1	.492,-1	.484,-1	-.165,-1	-.125,-1
24	-.105,-1	.160,-1	.260,-1	.275,-1	.620,-1
25	-.402,-1	.389,-2	.373,-1	.379,-1	.127,-1
26	-.197,-1	.431,-2	.329,-1	.133,-1	-.146,-1
27	-.774,-2	-.306,-1	.381,-1	-.718,-1	.121,-1
28	-.169,-1	.271,-1	.233,-1	-.402,-1	.133,-2
29	.264,-1	-.273,-1	.442,-1	.434,-2	-.112,-1
30	-.577,-2	.475,-1	-.597,-2	.822,-2	.454,-1
31	-.593,-1	.443,-1	-.272,-1	-.375,-1	-.640,-2
32	-.224,-1	-.322,-2	-.532,-1	-.166,-1	-.840,-2
33	.163,-1	-.145,-1	-.306,-1	.307,-1	-.141,-2
34	-.374,-2	-.811,-4	.525,-2	.313,-1	-.215,-2
35	-.224,-1	-.155,-1	-.171,-1	.872,-2	-.242,-1
36	-.218,-1	-.224,-1	.587,-1	-.169,-1	-.159,-1
37	-.525,-1	.200,-1	.330,-1	-.980,-1	-.457,-1
38	.350,-2	.153,-1	.344,-4	-.115,-1	-.150,-1
39	-.214,-1	.424,-1	.198,-1	.156,-2	.218,-2
40	-.204,-1	-.465,-2	.425,-1	.242,-1	.175,-1
41	.347,-2	.345,-1	.450,-1	-.832,-2	.155,-1
42	.650,-2	-.338,-1	-.122,-1	.272,-1	.426,-1
43	-.406,-1	-.375,-1	-.329,-1	.573,-1	.180,-1
44	.198,-1	-.202,-1	.155,-1	.367,-1	.491,-1
45	.395,-1	.244,-1	.404,-1	-.171,-1	.494,-1
46	.133,-1	-.184,-2	.230,-3	.124,-1	.289,-1
47	.734,-2	.140,-1	.299,-1	.168,-1	.745,-1
48	.194,-1	.136,-1	.135,-2	-.221,-1	.418,-1
49	-.212,-1	.132,-1	-.508,-2	.767,-2	.118,-1
50	-.334,-1	.678,-2	-.199,-2	-.228,-1	-.124,-1
51	-.661,-2	.483,-1	-.649,-2	-.544,-1	.293,-2
52	-.318,-1	-.113,-1	.684,-2	-.287,-1	.251,-1
53	.125,-1	.522,-1	.437,-1	.858,-2	-.173,-1
54	-.314,-1	.204,-1	.257,-1	.230,-1	.148,-1
55	.119,-1	-.328,-1	-.341,-1	.678,-1	-.752,-2
56	.419,-1	-.449,-2	.504,-1	-.273,-1	.547,-1
57	-.236,-1	-.502,-2	.743,-1	-.224,-1	-.118,-1
58	.284,-2	-.177,-1	.397,-1	.314,-1	-.540,-2
59	.398,-1	-.374,-1	.869,-2	-.104,-2	.270,-1
60	.256,-1	.955,-2	-.235,-1	-.417,-1	.753,-2

Run No. 59; u component

K	Anemometer Position Number 1	2	3	4	5
00	1.000	1.000	1.000	1.000	1.000
01	.595	.619	.473	.580	.450
02	.350	.363	.234	.329	.218
03	.222	.223	.130	.216	.116
04	.147	.153	.707,-1	.163	.239,-1
05	.909,-1	.120	.924,-1	.151	.109,-1
06	.939,-1	.102	.100	.102	.401,-1
07	.536,-1	.932,-1	.155	.419,-1	.383,-1
08	.490,-1	.108	.136	.294,-1	.325,-1
09	.691,-1	.126	.123	.689,-1	.702,-1
10	.612,-1	.102	.131	.994,-1	.501,-1
11	.490,-1	.114	.118	.814,-1	.430,-1
12	.367,-1	.133	.104	.969,-1	.820,-2
13	.579,-1	.135	.841,-1	.121	.391,-1
14	.630,-1	.142	.902,-1	.127	.344,-1
15	.709,-1	.133	.580,-1	.114	.719,-1
16	.550,-1	.151	.541,-1	.658,-1	.124
17	.533,-1	.134	.848,-1	.399,-1	.833,-1
18	.470,-1	.985,-1	.879,-1	.486,-1	.774,-1
19	.563,-1	.773,-1	.752,-1	.764,-1	.479,-1
20	.390,-1	.825,-1	.446,-1	.752,-1	.364,-1
21	.178,-1	.886,-1	.317,-1	.481,-1	.309,-1
22	.293,-1	.992,-1	.909,-2	.399,-1	.328,-1
23	.450,-1	.977,-1	.484,-1	.469,-1	.759,-2
24	.721,-1	.118	.502,-1	.851,-1	.289,-1
25	.727,-1	.170	.811,-1	.640,-1	.459,-1
26	.285,-1	.173	.917,-1	.347,-1	.753,-2
27	.244,-1	.170	.257,-1	.148,-1	.122,-1
28	.325,-1	.165	.429,-1	.299,-1	.242,-1
29	.752,-2	.145	.633,-2	.348,-1	.336,-1
30	.404,-2	.121	.757,-2	.634,-1	-.120,-1
31	.247,-1	.932,-1	.150,-2	.494,-1	-.104,-1
32	.498,-1	.856,-1	.723,-2	.229,-1	-.103,-2
33	.679,-1	.970,-1	.295,-1	.291,-1	.246,-2
34	.836,-1	.758,-1	.795,-2	.485,-1	.304,-1
35	.587,-1	.864,-1	.125,-1	.498,-1	.207,-1
36	.752,-1	.902,-1	.127,-1	.304,-1	.626,-1
37	.824,-1	.105	.266,-1	.439,-1	.100
38	.268,-1	.985,-1	-.271,-2	.708,-1	.900,-1
39	.370,-1	.119	-.127,-1	.789,-1	.425,-1
40	.794,-1	.111	.181,-1	.727,-1	.170,-1
41	.630,-1	.116	.252,-1	.565,-1	-.425,-2
42	.612,-1	.894,-1	.684,-1	.627,-1	.828,-3
43	.510,-1	.841,-1	.101	.658,-1	-.477,-1
44	.333,-1	.509,-1	.871,-1	.714,-1	-.322,-1
45	-.137,-2	.430,-1	.483,-1	.727,-1	.677,-2
46	.124,-1	.430,-1	.297,-1	.604,-1	.130,-1
47	.201,-1	.298,-1	.848,-2	.826,-1	.284,-1
48	.282,-1	.389,-1	.955,-2	.665,-1	.473,-2
49	.493,-2	.436,-1	.161,-1	.619,-1	-.272,-1
50	.648,-2	.105	.317,-1	.477,-1	.705,-2
51	.195,-1	.132	.320,-1	.538,-1	.394,-1
52	.199,-1	.132	.420,-1	.646,-1	.530,-1
53	.213,-1	.124	.747,-1	.570,-1	.895,-1
54	.193,-1	.970,-1	.811,-1	.494,-2	.573,-1
55	.228,-1	.642,-1	.758,-1	.154,-1	.102
56	.316,-2	.152,-1	.795,-1	.234,-1	.114
57	-.142,-1	.189,-1	.607,-1	.368,-1	.922,-1
58	.390,-2	.152,-1	.470,-1	.336,-1	.737,-1
59	.494,-1	.230,-1	.477,-1	.416,-1	.305,-1
60	.490,-1	.128,-1	.795,-1	.596,-1	.132,-1

Run No. 59; v component

	Anemometer position number				
K	1	2	3	4	5
00	1.000	1.000	1.000	1.000	1.000
01	.374	.484	.442	.321	.593
02	.152	.308	.270	.[illegible],-1	.3[illegible]
03	.539,-1	.23[illegible]	.15[illegible]	.[illegible],-1	.2[illegible]
04	.377,-1	.[illegible]	.1[illegible]	.794,-1	.2[illegible]
05	.[illegible],-1	.15[illegible]	.114	.312,-1	.182
06	.324,-1	.14[illegible]	.327,-1	.[illegible],-1	.110
07	.5[illegible],-1	.135	.[illegible]78,-1	.59[illegible],-1	.725,-1
08	.1[illegible]	.13[illegible]	.[illegible]47,-1	.[illegible],-1	.[illegible]8[illegible],-1
09	.817,-1	.108	.[illegible]98,-1	.794,-1	.[illegible]40,-1
10	.[illegible]00	.[illegible]08,-1	.72[illegible],-1	.66[illegible],-1	.474,-1
11	.[illegible]1,-1	.705,-1	.471,-1	.5[illegible],-1	.8[illegible],-1
12	.459,-1	.100	.[illegible]65,-1	.7[illegible]5,-1	.101
13	.753,-1	.314,-1	.1[illegible],-1	.79[illegible],-1	.702,-1
14	.706,-1	.111,-1	.218,-1	.150	.[illegible]07,-1
15	.657,-1	.721,-1	.101	.[illegible]2[illegible],-1	.[illegible]59,-1
16	.41[illegible],-1	.[illegible]08,-1	.1[illegible]	.[illegible]6[illegible],-1	.569,-
17	.12[illegible]	.1[illegible]4,-1	.1[illegible]2	.[illegible]5[illegible],-1	.[illegible]62,-
18	.114	.114,-1	.[illegible]15,-1	.74[illegible],-1	.[illegible]5[illegible],-1
19	.152	.[illegible]35,-1	.[illegible]5[illegible],-1	.[illegible]78,-1	.[illegible]59,-1
20	.102	.341,-1	.[illegible]6[illegible],-1	.[illegible]75,-1	.429,-1
21	.[illegible]60,-1	-.175,-1	.[illegible]47,-1	.351,-1	.703,-1
22	.739,-1	-.[illegible]65,-1	.[illegible]71,-1	.[illegible]04,-1	.[illegible]45,-1
23	.[illegible]55,-1	-.[illegible]44,-1	.117	.1[illegible],-1	.118
24	.[illegible]12,-1	-.[illegible]07,-1	.[illegible]24,-1	.[illegible]5[illegible],-1	.155
25	.127	-.[illegible]41,-1	.7[illegible],-1	.138,-1	.1[illegible]
26	.[illegible]21,-1	-.[illegible]50,-1	.110	.[illegible]50,-1	.102
27	.810,-1	.[illegible]00,-1	.127	.[illegible]3[illegible],-1	.[illegible]06,-1
28	.[illegible]77,-1	.[illegible]42,-1	.[illegible]52,-1	.[illegible]01,-1	.[illegible]80,-1
29	.391,-1	.451,-1	.[illegible]3[illegible],-1	.619,-1	.[illegible]64,-1
30	.162,-1	.[illegible]71,-3	.[illegible]87,-1	.45[illegible],-1	.[illegible]52,-1
31	.[illegible]00,-1	.[illegible]00,-2	.[illegible]30,-1	.[illegible]8[illegible],-1	-.[illegible]00,-3
32	.[illegible]05,-1	-.[illegible]89,-1	.[illegible]66,-1	.[illegible]90,-1	.137,-1
33	.[illegible]12,-1	-.[illegible]34,-1	.101	.[illegible]3[illegible],-1	.[illegible]41[illegible],-1
34	.777,-1	-.204,-1	.87[illegible],-1	.135,-1	.[illegible]17,-1
35	.956,-1	-.143,-1	.[illegible]47,-1	.[illegible]15,-1	.[illegible]71,-1
36	.120	-.691,-1	.[illegible]20,-1	.[illegible]79[illegible],-1	.[illegible]72,-1
37	.121	-.[illegible]90,-1	.818,-1	.[illegible]3[illegible],-1	.126
38	.427,-1	-.[illegible]44,-1	.[illegible]81,-1	.[illegible]66,-1	.130
39	.[illegible]58,-1	-.[illegible]41,-1	.[illegible]45,-1	.[illegible]70,-1	.100
40	.[illegible]78,-1	-.[illegible]74,-1	.[illegible]37,-1	.[illegible]72,-1	.[illegible]55,-1
41	.[illegible]41,-1	.[illegible]82,-2	.[illegible]31,-1	.[illegible]69,-1	.[illegible]61,-1
42	.[illegible]00,-2	-.[illegible]62,-1	.[illegible]15,-1	.[illegible]90,-2	.[illegible]29,-1
43	-.[illegible]23,-1	-.[illegible]22,-2	.[illegible]52,-1	.[illegible]14,-1	.[illegible]99,-1
44	.[illegible]43,-1	-.[illegible]38,-1	.[illegible]53,-1	.[illegible]70,-2	.[illegible]91,-1
45	.[illegible]56,-1	.[illegible]71,-2	.[illegible]64,-1	-.[illegible]35,-1	.[illegible]26,-1
46	.[illegible]13,-1	.[illegible]28,-1	.[illegible]42,-1	.[illegible]79,-1	.[illegible]97,-1
47	.[illegible]14,-1	.[illegible]68,-1	.[illegible]87,-1	.[illegible]66,-1	.[illegible]04,-1
48	-.[illegible]58,-1	.[illegible]14,-1	.[illegible]89,-1	.[illegible]90,-1	-.[illegible]10,-2
49	.[illegible]56,-1	.[illegible]75,-1	.[illegible]91,-1	-.[illegible]68,-2	.[illegible]01,-2
50	.[illegible]78,-1	.[illegible]54,-1	.[illegible]01	.[illegible]01,-1	.[illegible]20,-1
51	-.[illegible]30,-1	-.[illegible]43,-3	.[illegible]59,-1	.[illegible]04,-1	-.[illegible]11,-1
52	.[illegible]50,-1	-.[illegible]15,-1	.[illegible]72,-1	.[illegible]25,-1	.[illegible]03,-2
53	.[illegible]56,-1	-.[illegible]83,-2	.[illegible]38,-1	.[illegible]22,-1	.[illegible]91,-2
54	.[illegible]36,-1	-.[illegible]84,-2	.[illegible]43,-1	.[illegible]94,-1	.[illegible]23,-3
55	.[illegible]56,-1	.[illegible]74,-2	.[illegible]14,-1	.[illegible]82,-1	.[illegible]49,-1
56	.[illegible]12,-1	.[illegible]56,-1	.[illegible]38,-1	.[illegible]75,-1	-.[illegible]50,-1
57	.[illegible]86,-1	.[illegible]37,-2	.[illegible]88,-1	.[illegible]94,-1	.[illegible]41,-1
58	.[illegible]19,-1	.[illegible]66,-1	.[illegible]25,-1	-.[illegible]50,-1	.[illegible]71,-1
59	.[illegible]81,-1	.[illegible]04,-1	.101	-.[illegible]14,-2	.[illegible]65,-1
60	.[illegible]61,-1	-.[illegible]26,-2	.[illegible]21,-1	-.[illegible]77,-1	.[illegible]31,-1

Run No. 59; w component

K	Anemometer Position Number 1	2	3	4	5
00	1.000	1.000	1.000	1.000	1.000
01	.667,-1	.518,-2	.221,-1	.705,-1	.446,-1
02	.139,-2	.200,-1	.122,-1	.595,-1	.719,-2
03	.648,-1	.293,-1	-.234,-1	-.973,-4	.837,-2
04	.120,-1	-.134,-1	.261,-1	.305,-2	.129,-1
05	.198,-2	.209,-1	.394,-1	-.423,-1	-.491,-1
06	.169,-1	.142,-1	.159,-1	-.203,-1	-.697,-2
07	.445,-2	.299,-2	-.184,-1	-.373,-2	.596,-1
08	.744,-2	-.190,-1	-.416,-1	.639,-1	-.275,-1
09	.209,-1	-.205,-1	-.353,-1	.217,-1	.548,-2
10	.238,-1	-.240,-1	-.158,-1	.447,-1	.529,-1
11	-.324,-1	-.216,-1	-.157,-1	-.242,-1	.276,-1
12	.199,-1	-.333,-1	.103,-1	.357,-1	-.207,-1
13	-.275,-1	.303,-1	-.459,-2	.327,-1	-.287,-1
14	-.389,-1	.490,-1	.306,-1	.125,-1	.173,-1
15	.247,-1	-.124,-1	.904,-2	.825,-2	.871,-2
16	-.155,-1	-.303,-2	.404,-1	.248,-1	-.543,-2
17	-.345,-1	-.614,-1	.190,-1	-.336,-1	.435,-1
18	-.131,-1	-.185,-1	.202,-1	-.678,-1	.234,-1
19	-.174,-1	.769,-2	.300,-1	.601,-1	-.285,-2
20	-.639,-1	.121,-1	-.430,-2	.253,-1	.136,-1
21	-.324,-1	.120,-1	.410,-2	-.217,-1	-.220,-1
22	-.510,-1	.360,-1	.602,-1	.765,-2	-.831,-2
23	-.212,-1	-.871,-2	-.199,-1	.471,-1	-.340,-2
24	.183,-1	.462,-1	-.345,-1	.445,-1	-.339,-1
25	.148,-1	-.276,-1	-.349,-1	-.945,-2	.170,-1
26	-.224,-1	.227,-1	-.499,-1	-.532,-1	-.155,-1
27	.135,-1	.265,-1	-.371,-1	-.270,-1	.468,-1
28	.639,-1	.309,-1	.413,-1	.174,-1	.323,-1
29	-.536,-1	.429,-1	.295,-1	.289,-1	-.484,-1
30	-.102,-1	-.262,-1	.402,-1	-.699,-1	-.131,-1
31	.883,-1	-.769,-2	-.287,-1	-.223,-2	-.249,-1
32	.112,-1	.925,-2	.277,-1	.337,-1	-.214,-3
33	.186,-2	.803,-2	-.409,-1	-.440,-1	-.596,-1
34	.105,-1	.556,-1	.329,-1	-.157,-1	-.215,-2
35	.197,-1	-.271,-2	.347	.325,-1	.348,-1
36	.280,-1	-.388,-1	-.199	.305,-1	-.291,-1
37	-.218,-1	-.205,-2	-.234	.367,-1	.163,-1
38	.371,-1	-.273,-1	-.113	.413,-1	-.563,-1
39	-.226,-1	.312,-1	-.144	.699,-2	-.207,-1
40	-.914,-2	-.318,-1	-.229	-.277,-1	-.961,-2
41	.343,-1	-.382,-1	-.501,-1	-.266,-1	-.225,-1
42	-.371,-1	.348,-1	.146	-.299,-1	.307,-1
43	.100,-1	-.160,-1	-.526,-1	.343,-1	-.460,-1
44	.171,-1	-.123,-1	-.178	-.198,-1	-.596,-2
45	.914,-2	.195,-1	.127	-.131,-1	-.280,-1
46	-.480,-2	.208,-2	.165	-.112,-1	.607,-2
47	.422,-1	-.837,-2	.114	-.155,-1	-.607,-2
48	.315,-1	-.518,-2	.474,-2	-.133,-1	-.697,-1
49	.245,-1	.563,-2	.196	-.533,-1	-.730,-2
50	.174,-1	.382,-2	.995,-1	.115,-2	.540,-2
51	-.429,-1	.748,-3	-.209	.891,-1	-.307,-1
52	-.834,-1	-.276,-1	.134	.623,-1	-.202,-1
53	-.401,-1	.448,-1	.135	-.118,-1	.544,-1
54	-.287,-2	.539,-1	.908,-1	-.197,-2	.595,-1
55	.559,-2	.502,-1	-.123	-.498,-1	-.553,-2
56	-.131,-1	-.596,-1	-.133	-.323,-2	-.730,-2
57	-.277,-1	-.207,-1	-.222	.304,-1	-.446,-1
58	.657,-2	.346,-1	.281	-.787,-2	.295,-2
59	-.101,-1	.552,-1	.223,-1	.579,-2	.228,-1
60	-.566,-2	-.356,-2	-.416	.522,-1	.303,-1

Run No. 60; u component

K	Anemometer Position Number 1	2	3	4	5
00	1.000	1.000	1.000	1.000	1.000
01	.683	672	.694	.701	.719
02	.490	.498	.499	.555	.535
03	.387	.404	.396	.438	.425
04	.330	.377	.309	.348	.362
05	.310	.337	.277	.280	.329
06	.264	.272	.265	.228	.283
07	.222	.234	.232	.182	.243
08	.191	.213	.207	.165	.214
09	.167	.206	.183	.153	.214
10	.150	.200	.167	.139	.225
11	.111	.166	.148	.133	.204
12	.826,-1	.128	.141	.113	.170
13	.824,-1	.148	.120	.969,-1	.143
14	.949,-1	.122	.103	.961,-1	.133
15	.666,-1	.918,-1	.928,-1	.978,-1	.147
16	.517,-1	.910,-1	.761,-1	.923,-1	.115
17	.585,-1	.640,-1	.397,-1	.746,-1	.791,-1
18	.451,-1	.571,-1	.377,-1	.684,-1	.437,-1
19	.506,-1	.564,-1	.694,-1	.652,-1	.402,-1
20	.448,-1	.757,-1	.886,-1	.101	.479,-1
21	.536,-1	.801,-1	.941,-1	.117	.655,-1
22	.341,-1	.772,-1	.113	.144	.598,-1
23	.317,-1	.782,-1	.972,-1	.159	.530,-1
24	.607,-1	.111	.865,-1	.162	.547,-1
25	.794,-1	.115	.970,-1	.139	.461,-1
26	.939,-1	.141	.926,-1	.136	.622,-1
27	.105	.137	.993,-1	.116	.534,-1
28	.113	.111	.111	.104	.426,-1
29	.124	.114	.112	.977,-1	.440,-1
30	.112	.131	.111	.888,-1	.380,-1
31	.947,-1	.127	.111	.633,-1	.447,-1
32	.872,-1	.118	.116	.448,-1	.271,-1
33	.901,-1	.946,-1	.124	.327,-1	.304,-1
34	.921,-1	.858,-1	.110	.190,-1	.696,-1
35	.809,-1	.103	.137	.946,-2	.794,-1
36	.635,-1	.103	.126	.381,-1	.812,-1
37	.367,-1	.904,-1	.120	.325,-1	.590,-1
38	.431,-1	.599,-1	.124	.331,-1	.902,-1
39	.560,-1	.709,-1	.111	.661,-1	.638,-1
40	.949,-1	.119	.129	.772,-1	.739,-1
41	.978,-1	.106	.137	.770,-1	.100
42	.928,-1	.747,-1	.123	.733,-1	.109
43	.675,-1	.621,-1	.109	.765,-1	.734,-1
44	.484,-1	.582,-1	.101	.766,-1	.602,-1
45	.523,-1	.749,-1	.684,-1	.883,-1	.735,-1
46	.155,-1	.479,-1	.329,-1	.975,-1	.739,-1
47	.503,-2	.259,-1	.433,-1	.102	.762,-1
48	-.323,-1	.316,-1	.388,-1	.113	.553,-1
49	-.279,-1	.195,-1	.456,-1	.119	.307,-1
50	-.420,-1	.105,-1	.411,-1	.125	.283,-1
51	-.609,-1	-.251,-1	.136,-1	.111	.323,-1
52	-.835,-1	-.339,-1	.273,-1	.955,-1	.368,-1
53	-.717,-1	-.115,-1	.727,-2	.104	.254,-1
54	-.589,-1	.206,-1	.854,-2	.114	-.540,-2
55	-.345,-1	-.153,-1	.153,-1	.711,-1	.121,-2
56	-.372,-1	-.464,-1	.287,-1	.467,-1	-.145,-3
57	-.394,-1	-.435,-1	.498,-1	.393,-1	.220,-1
58	-.294,-1	-.226,-1	.181,-1	.424,-1	.218,-1
59	-.217,-1	.856,-2	.225,-1	.615,-1	.191,-1
60	-.127,-1	.163,-1	.516,-1	.433,-1	.248,-1

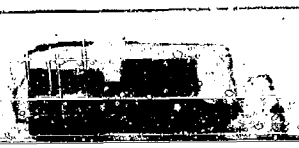

Run No. 60; v component

K	Amplitude Position Number 1	2	3	4	5
00	1.000	1.000	1.000	1.000	1.000
01	.253	.223	.151	.277	.320
02	.155	.149	.130	.111	.279
03	.114	.118	.950,-1	.619,-1	.180
04	.769,-1	.776,-1	.141	.984,-2	.229
05	.704,-1	.917,-1	.150	.659,-1	.150
06	.648,-1	.818,-1	.114	.241,-1	.141
07	.107	.108	.547,-1	.139,-1	.176
08	.720,-1	.823,-1	.105	.275,-1	.106
09	.604,-1	.472,-1	.043,-1	.260,-1	.105
10	.541,-1	.667,-1	.155,-1	.189,-1	.933,-1
11	.409,-1	.413,-1	.708,-1	.195,-1	.119
12	.632,-1	.50[illegible],-1	.577,-1	.139,-1	.106
13	.668,-1	.844,-1	.100	.165,-1	.851,-1
14	.758,-1	.682,-1	.101	-.331,-2	.605,-1
15	.483,-1	.844,-1	.572,-1	.570,-1	.905,-1
16	.615,-1	.805,-1	.893,-1	.424,-1	.555,-1
17	.155,-1	.630,-1	.616,-1	.108,-1	.790,-1
18	.498,-1	.844,-1	.[illegible]08,-1	.503,-1	.434,-1
19	.897,-2	.219,-1	.653,-1	.544,-1	.533,-1
20	.343,-1	.172,-1	.720,-1	.624,-1	.611,-1
21	-.[illegible]40,-1	.566,-1	.497,-1	.275,-1	.665,-1
22	.449,-1	.870,-1	.887,-1	-.200,-2	.711,-1
23	.442,-1	.870,-1	.877,-1	.701,-2	.834,-1
24	.282,-1	.228,-1	.670,-1	-.965,-2	.829,-1
25	.385,-1	.387,-1	.[illegible]55,-1	-.501,-2	.700,-1
26	.143,-1	-.187,-1	.[illegible]20,-1	.195,-1	.505,-1
27	.240,-1	-.350,-1	.871,-1	.613,-1	.842,-1
28	.138,-1	.487,-2	.503,-1	.108,-1	.773,-1
29	.345,-1	.249,-1	.462,-2	.480,-1	.784,-1
30	.450,-1	.[illegible]46,-1	-.106,-1	.509,-1	.903,-1
31	.407,-1	.364,-1	-.190,-2	-.115,-1	.978,-1
32	.472,-1	.507,-1	.146,-1	-.123,-1	.113
33	.285,-1	.[illegible]68,-1	.355,-1	-.851,-2	.803,-1
34	.102,-1	.274,-1	.500,-1	.250,-4	.801,-1
35	-.308,-1	.275,-1	.531,-1	.867,-2	.105
36	-.152,-1	.281,-1	.[illegible]19,-1	-.589,-2	.927,-1
37	-.355,-1	-.114,-1	.610,-1	-.245,-1	.161
38	-.309,-2	.224,-1	.109,-1	.461,-1	.952,-1
39	.542,-1	.364,-1	.336,-1	.272,-1	.119
40	.302,-1	.516,-1	.126	.709,-1	.914,-1
41	.418,-1	.435,-1	.475,-1	.653,-1	.113
42	.326,-1	-.126,-1	.116	.400,-1	.111
43	.411,-1	-.510,-1	.418,-1	.483,-1	.844,-1
44	.423,-1	.552,-2	.610,-1	.368,-1	.114
45	.253,-1	.754,-2	.610,-1	-.143,-1	.101
46	.309,-1	.115,-1	.560,-1	-.533,-1	.898,-1
47	.260,-1	.147,-1	.780,-1	-.[illegible]87,-3	.909,-1
48	.615,-1	.142,-2	.412,-1	-.453,-3	.105
49	.670,-1	.195,-1	.345,-1	.247,-4	.832,-1
50	.442,-1	.397,-3	.862,-1	.179,-1	.935,-1
51	.480,-1	.583,-1	.302,-1	.143,-1	.998,-1
52	.621,-1	.802,-1	-.909,-2	.323,-1	.518,-1
53	.813,-1	.703,-1	.588,-1	-.293,-1	.263,-1
54	.200,-1	.496,-1	.494,-1	.773,-2	.708,-1
55	.189,-1	.225,-1	.203,-1	-.896,-3	.567,-1
56	.290,-1	-.818,-2	.415,-1	.645,-2	.842,-1
57	.426,-1	-.283,-2	-.108,-2	.381,-1	.808,-1
58	.293,-1	.159,-2	.286,-1	.261,-1	.548,-1
59	.507,-2	.911,-2	.362,-1	.251,-1	.116
60	.438,-2	.498,-2	.481,-1	-.165,-1	.691,-1

Run No. 60; w component

	Anemometer Position Number				
K	1	2	3	4	5
00	1.000	1.000	1.000	1.000	1.000
01	.720,-1	.519,-1	.434,-1	.[illegible]	.621,-1
02	.271,-1	.332,-1	.100	.[illegible],-1	.159,-1
03	-.161,-1	-.271,-1	-.229,-2	.[illegible],-1	-.515,-1
04	-.156,-1	-.280,-1	-.183,-2	-.[illegible],-1	.228,-1
05	-.221,-1	.379,-1	.470,-2	.448,-1	-.150,-1
06	.342,-1	.880,-3	-.489,-1	.[illegible],-2	-.358,-1
07	-.944,-1	.250,-1	.194,-1	.580,-1	.496,-2
08	-.104,-1	.298,-3	.189,-1	-.[illegible],-1	.444,-2
09	-.112,-1	.391,-1	.118,-1	.488,-1	.282,-1
10	-.128,-1	.122,-1	-.140,-1	.537,-1	.288,-1
11	.437,-2	-.437,-2	.335,-1	.107,-1	-.221,-1
12	-.156,-1	-.305,-1	.159,-1	.360,-1	.100,-2
13	-.308,-1	.670,-1	.639,-3	.[illegible],-1	-.391,-1
14	.857,-3	.146,-1	.135,-1	-.217,-1	-.305,-1
15	-.231,-1	.291,-1	-.456,-1	.[illegible],-1	.221,-2
16	.873,-3	-.512,-3	.162,-2	.921,-2	.775,-1
17	-.494,-1	.352,-1	-.190,-1	-.[illegible],-1	-.[illegible],-2
18	.417,-1	-.150,-1	-.229,-1	.504,-1	-.733,-2
19	-.698,-1	.153,-1	-.653,-2	.150,-1	.287,-1
20	-.414,-1	-.197,-[illegible]	-.134,-1	.110,-1	.269,-1
21	-.614,-2	.292,-1	-.601,-[illegible]	.[illegible],-1	.250,-1
22	.860,-1	.118,-1	.102,-1	.315,-1	-.495,-1
23	-.573,-1	-.136,-1	.361,-1	.246,-1	-.[illegible],-2
24	-.103,-1	-.920,-[illegible]	-.853,-2	.121,-1	-.629,-2
25	.609,-1	-.216,-1	.200,-1	.243,-1	.721,-[illegible]
26	.107,-2	.403,-1	-.189,-1	-.[illegible],-1	-.423,-1
27	.360,-1	-.300,-2	-.168,-1	.229,-1	-.369,-1
28	.387,-1	.629,-3	-.867,-1	.144,-1	.600,-1
29	.606,-2	.508,-1	.516,-2	-.183,-1	.269,-1
30	-.126,-1	-.314,-1	-.373,-2	.441,-1	-.211,-1
31	.968,-3	-.723,-2	-.187,-1	-.160,-1	-.603,-1
32	-.248,-1	.281,-1	-.300,-1	.228,-1	.108,-1
33	-.281,-1	.326,-1	.120,-1	.359,-1	-.558,-1
34	.202,-1	-.130,-1	.205,-1	.378,-[illegible]	-.195,-1
35	-.267,-1	-.390,-2	-.569,-1	.571,-1	-.532,-1
36	-.366,-1	-.635,-1	.120,-1	-.181,-1	.646,-2
37	-.544,-1	-.506,-3	-.496,-1	-.929,-2	-.309,-1
38	-.135,-1	-.135,-2	-.248,-1	-.794,-2	.560,-1
39	.683,-2	.179,-1	.172,-1	-.302,-1	-.264,-1
40	.141,-1	.396,-1	.220,-1	.392,-1	-.113,-1
41	-.270,-1	.555,-2	.154,-1	-.913,-2	.109,-1
42	.260,-1	.380,-2	.191,-1	.244,-1	.190,-1
43	.146,-2	-.250,-1	.159,-1	.105,-1	.769,-2
44	.130,-1	.250,-1	-.255,-1	.231,-1	-.472,-2
45	.444,-1	-.319,-1	.504,-1	.110,-1	.314,-1
46	-.136,-1	-.760,-2	.637,-1	.391,-1	.100,-1
47	.913,-2	.492,-1	.259,-1	.288,-2	.820,-2
48	-.817,-2	-.115,-2	.360,-1	.202,-1	.329,-1
49	-.213,-1	-.347,-1	.541,-2	-.336,-1	-.251,-1
50	-.289,-1	-.401,-1	.536,-1	-.368,-1	.662,-2
51	-.735,-2	-.529,-1	.243,-2	.144,-1	-.703,-1
52	.208,-1	-.405,-1	-.228,-2	-.265,-1	.432,-1
53	-.246,-1	.384,-1	-.627,-1	.160,-1	-.109,-1
54	-.164,-1	.390,-1	.344,-1	-.145,-1	.470,-1
55	-.279,-2	-.978,-2	-.639,-2	-.551,-1	.142,-1
56	.937,-2	-.441,-1	-.330,-1	.134,-1	-.366,-1
57	.193,-2	-.292,-1	.143,-1	-.214,-1	.872,-2
58	.496,-2	.235,-1	-.444,-2	-.246,-1	-.410,-1
59	-.392,-2	.263,-1	.256,-1	.857,-2	-.430,-1
60	-.225,-1	.936,-2	-.972,-2	-.210,-1	-.211,-1

Run No. 01; u component

K	Anemometer Position Number 1	2	3	4	5
00	1.000	1.000			
01	.765	.737			
02	.602	.603			
03	.520	.497			
04	.452	.431			
05	.400	.366			
06	.338	.319			
07	.280	.279			
08	.234	.229			
09	.193	.173			
10	.172	.165			
11	.121	.145			
12	.114	.107			
13	.911,-1	.898,-1			
14	.610,-1	.591,-1			
15	.466,-1	.513,-1			
16	.442,-1	.369,-1			
17	.299,-1	.326,-1			
18	.224,-1	.282,-1			
19	.200,-1	.169,-1			
20	-.857,-2	-.511,-2			
21	-.127,-1	.784,-2			
22	-.579,-2	-.140,-1			
23	-.123,-1	-.774,-2			
24	-.547,-2	.774,-2			
25	.109,-1	.849,-2			
26	.139,-1	.217,-1			
27	.256,-2	-.145,-1			
28	-.138,-1	-.829,-1			
29	-.337,-1	-.169,-1			
30	-.485,-1	-.723,-2			
31	-.455,-1	-.255,-1			
32	-.450,-1	-.873,-1			
33	-.460,-1	-.315,-1			
34	-.390,-1	-.472,-1			
35	-.207,-1	-.249,-1			
36	-.359,-1	-.123,-1			
37	-.362,-1	-.487,-1			
38	-.251,-1	-.528,-1			
39	-.271,-1	-.342,-1			
40	-.290,-1	-.294,-1			
41	-.214,-1	-.156,-1			
42	-.273,-1	-.927,-2			
43	-.489,-1	-.184,-1			
44	-.644,-1	-.266,-1			
45	-.693,-1	-.365,-1			
46	-.597,-1	-.115,-1			
47	-.615,-1	-.110,-1			
48	-.702,-1	-.253,-1			
49	-.727,-1	-.497,-1			
50	-.552,-1	-.393,-1			
51	-.440,-1	-.279,-1			
52	-.417,-1	-.280,-1			
53	-.424,-1	-.180,-1			
54	-.110,-1	.174,-1			
55	.793,-2	.171,-1			
56	.364,-1	.610,-1			
57	.577,-1	.656,-1			
58	.597,-1	.766,-1			
59	.695,-1	.818,-1			
60	.948,-1	.905,-1			

Run No. 61; v component

K	Anemometer Position Number 1	2	3	4	5
00	1.000	1.000			
01	.794	.764			
02	.734	.708			
03	.725	.694			
04	.702	.671			
05	.670	.644			
06	.661	.644			
07	.642	.620			
08	.628	.602			
09	.606	.585			
10	.601	.574			
11	.592	.551			
12	.587	.542			
13	.571	.523			
14	.550	.519			
15	.541	.514			
16	.541	.505			
17	.532	.500			
18	.518	.481			
19	.514	.481			
20	.491	.461			
21	.486	.462			
22	.477	.477			
23	.472	.481			
24	.477	.477			
25	.477	.460			
26	.486	.468			
27	.477	.450			
28	.462	.461			
29	.468	.438			
30	.453	.415			
31	.439	.419			
32	.428	.415			
33	.419	.386			
34	.419	.399			
35	.418	.398			
36	.400	.382			
37	.405	.371			
38	.394	.371			
39	.385	.367			
40	.394	.356			
41	.389	.356			
42	.385	.344			
43	.380	.344			
44	.379	.333			
45	.387	.338			
46	.392	.330			
47	.374	.333			
48	.377	.319			
49	.377	.313			
50	.373	.316			
51	.357	.305			
52	.361	.295			
53	.373	.292			
54	.374	.274			
55	.363	.263			
56	.364	.281			
57	.351	.271			
58	.345	.260			
59	.349	.270			
60	.337	.266			

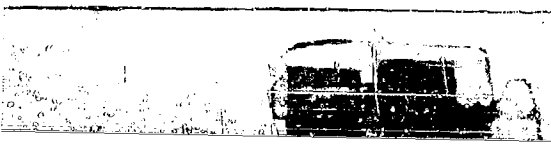

Run No. 61; w component

K	Anemometer Position Number 1	2	3	4	5
00	1.000	1.000			
01	.134	.125			
02	.444,-1	.641,-1			
03	.213,-1	-.237,-1			
04	.109	.168,-1			
05	.100,-1	-.468,-1			
06	.600,-2	-.113,-1			
07	-.356,-1	.201,-1			
08	-.205,-1	-.357,-1			
09	-.190,-1	-.356,-1			
10	-.405,-1	-.819,-2			
11	-.200,-1	-.920,-2			
12	.563,-2	-.194,-1			
13	.947,-2	-.694,-2			
14	-.191,-1	-.570,-2			
15	.366,-1	-.153,-1			
16	.257,-1	-.489,-2			
17	-.623,-2	.276,-1			
18	.280,-1	.419,-1			
19	.684,-1	-.185,-1			
20	-.165,-1	.192,-1			
21	.785,-2	.654,-2			
22	-.307,-1	.987,-2			
23	-.845,-2	.962,-2			
24	-.665,-1	.120,-1			
25	-.191,-1	-.175,-1			
26	.158,-1	-.178,-1			
27	.391,-1	-.151,-1			
28	.144,-2	-.232,-1			
29	.195,-1	-.242,-1			
30	.465,-2	.886,-2			
31	-.265,-1	.966,-2			
32	.375,-1	-.227,-1			
33	.177,-1	.291,-1			
34	.820,-1	-.456,-1			
35	-.701,-1	.198,-1			
36	-.390,-2	-.158,-1			
37	.154,-1	-.364,-1			
38	.426,-1	.240,-1			
39	-.198,-2	-.477,-2			
40	-.224,-1	.527,-1			
41	.149,-1	-.464,-2			
42	.580,-2	-.747,-2			
43	.205,-1	.125,-1			
44	.908,-3	-.143,-2			
45	.213,-1	-.170,-1			
46	.125,-1	.164,-1			
47	.340,-1	.133,-1			
48	-.317,-1	-.785,-2			
49	-.518,-1	.183,-1			
50	-.535,-1	-.105,-1			
51	-.511,-1	.280,-1			
52	-.288,-1	.289,-1			
53	-.333,-1	.369,-2			
54	-.206,-1	-.624,-2			
55	.405,-1	-.124,-1			
56	.514,-2	.536,-1			
57	.380,-1	.171,-2			
58	.124,-2	.138,-2			
59	-.221,-1	-.120,-1			
60	.408,-1	.722,-2			

Run No. 62; u component

	Anemometer Position Number				
K	1	2	3	4	5
00	1.000	1.000	1.000	1.000	1.000
01	.831	.806	.815	.886	.694
02	.711	.664	.691	.807	.688
03	.628	.588	.614	.746	.586
04	.562	.529	.548	.684	.504
05	.513	.475	.493	.639	.444
06	.487	.441	.461	.585	.391
07	.473	.417	.435	.543	.353
08	.461	.385	.397	.504	.337
09	.439	.373	.375	.474	.312
10	.426	.365	.334	.443	.289
11	.411	.352	.309	.411	.270
12	.366	.325	.285	.380	.247
13	.343	.284	.268	.355	.218
14	.310	.267	.246	.325	.215
15	.303	.254	.234	.301	.212
16	.290	.248	.178	.289	.220
17	.301	.236	.155	.264	.226
18	.294	.232	.139	.240	.226
19	.285	.230	.129	.229	.238
20	.298	.229	.126	.223	.241
21	.285	.234	.125	.215	.257
22	.202	.246	.113	.217	.259
23	.281	.249	.111	.227	.242
24	.266	.239	.118	.226	.239
25	.257	.215	.128	.227	.252
26	.248	.206	.142	.225	.228
27	.239	.188	.138	.227	.225
28	.220	.172	.138	.214	.208
29	.233	.189	.126	.201	.192
30	.226	.193	.122	.195	.168
31	.225	.183	.133	.197	.135
32	.225	.166	.135	.199	.121
33	.204	.141	.132	.189	.120
34	.182	.114	.136	.190	.112
35	.160	.105	.158	.100	.915,-1
36	.154	.103	.137	.176	.814,-1
37	.145	.939,-1	.127	.163	.794,-1
38	.149	.105	.129	.173	.897,-1
39	.154	.121	.109	.175	.847,-1
40	.178	.133	.110	.167	.863,-1
41	.191	.142	.123	.155	.872,-1
42	.185	.150	.127	.155	.872,-1
43	.170	.148	.135	.144	.923,-1
44	.157	.130	.137	.128	.940,-1
45	.139	.136	.133	.126	.897,-1
46	.121	.113	.149	.117	.949,-1
47	.939,-1	.944,-1	.144	.116	.872,-1
48	.872,-1	.946,-1	.127	.123	.872,-1
49	.867,-1	.823,-1	.128	.125	.863,-1
50	.939,-1	.831,-1	.135	.130	.844,-1
51	.111	.934,-1	.155	.133	.784,-1
52	.118	.108	.168	.140	.839,-1
53	.111	.110	.175	.155	.863,-1
54	.107	.121	.200	.160	.889,-1
55	.114	.129	.208	.161	.923,-1
56	.117	.121	.196	.160	.915,-1
57	.118	.971,-1	.198	.150	.815,-1
58	.106	.817,-1	.188	.159	.604,-1
59	.965,-1	.917,-1	.167	.165	.456,-1
60	.860,-1	.888,-1	.151	.156	.362,-1



Run No. 62; v component

K	Anemometer Position Number 1	2	3	4	5
00	1.000	1.000	1.000	1.000	1.000
01	.765	.671	.692	.603	.620
02	.676	.517	.495	.451	.474
03	.610	.502	.441	.339	.436
04	.552	.460	.410	.287	.386
05	.508	.422	.378	.240	.358
06	.492	.397	.358	.175	.359
07	.458	.398	.326	.183	.308
08	.422	.384	.301	.162	.273
09	.397	.346	.297	.178	.264
10	.407	.351	.286	.162	.250
11	.407	.354	.260	.125	.199
12	.392	.327	.259	.115	.193
13	.388	.342	.242	.800,-1	.212
14	.370	.310	.228	.101	.161
15	.344	.289	.219	.797,-1	.154
16	.330	.287	.205	.944,-1	.191
17	.325	.282	.209	.849,-1	.179
18	.325	.272	.215	.888,-1	.142
19	.309	.260	.204	.117	.127
20	.281	.243	.182	.118	.121
21	.256	.224	.172	.111	.104
22	.249	.230	.178	.106	.105
23	.227	.198	.146	.103	.977,-1
24	.208	.191	.156	.111	.872,-1
25	.199	.191	.142	.693,-1	.102
26	.195	.161	.110	.907,-1	.105
27	.191	.194	.124	.873,-1	.721,-1
28	.167	.191	.172	.929,-1	.897,-1
29	.170	.170	.185	.745,-1	.776,-1
30	.168	.142	.147	.205,-1	.107
31	.158	.142	.129	.471,-1	.102
32	.161	.140	.117	.415,-1	.927,-1
33	.146	.156	.671,-1	.172,-1	.723,-1
34	.147	.147	.672,-1	-.110,-1	.667,-1
35	.141	.129	.101	-.115,-1	.931,-1
36	.157	.154	.842,-1	.109,-1	.806,-1
37	.170	.161	.823,-1	-.410,-2	.728,-1
38	.162	.135	.815,-1	-.496,-2	.698,-1
39	.166	.112	.828,-1	.139,-1	.765,-1
40	.161	.100	.890,-1	.128,-1	.872,-1
41	.145	.961,-1	.727,-1	-.133,-2	.702,-1
42	.139	.978,-1	.801,-1	-.952,-2	.765,-1
43	.151	.661,-1	.230,-1	.443,-2	.524,-1
44	.147	.517,-1	.494,-1	-.279,-1	.467,-1
45	.140	.554,-1	.374,-1	-.196,-1	.388,-1
46	.142	.422,-1	.504,-1	.137,-2	.753,-1
47	.145	.420,-1	.455,-1	.376,-2	.809,-1
48	.125	.208,-1	.553,-1	.369,-1	.101
49	.117	.348,-1	.747,-1	.873,-2	.101
50	.100	.529,-1	.499,-1	.328,-1	.633,-1
51	.830,-1	.176,-1	.548,-1	.251,-1	.834,-1
52	.707,-1	-.313,-1	.737,-2	-.106,-2	.815,-1
53	.438,-1	-.439,-1	.798,-3	-.793,-2	.625,-1
54	.291,-1	-.280,-1	-.214,-2	-.205,-1	.380,-1
55	.170,-1	-.301,-1	.858,-2	.575,-2	.402,-1
56	.339,-1	-.230,-1	.870,-1	-.160,-1	.354,-1
57	.421,-1	-.202,-1	.170,-2	-.253,-1	.101,-1
58	.506,-1	-.335,-1	.440,-1	-.104,-1	.455,-2
59	.468,-1	-.282,-1	.143,-1	-.218,-1	.380,-2
60	.286,-1	-.243,-1	-.140,-1	-.147,-1	-.300,-1

Run No. 62; w component

	Anemometer Position Number				
K	1	2	3	4	5
00	1.000	1.000	1.000	1.000	1.000
01	.475,-1	.996,-1	.140	.229	.141
02	.627,-1	.957,-1	.656,-1	.161	.723,-1
03	.634,-1	.791,-1	.765,-1	.120	.599,-1
04	.714,-1	.784,-1	.949,-1	.438,-1	-.100,-1
05	.488,-1	.259,-2	.299,-1	.163,-1	.240,-1
06	.298,-1	.203,-1	.147,-1	.102,-1	.171,-1
07	.228,-1	.277,-2	-.499,-2	-.100,-1	-.121,-2
08	.529,-1	-.226,-1	.372,-1	.160,-1	.800,-2
09	.789,-1	-.153,-1	.082,-1	.408,-1	.301,-1
10	-.220,-1	.100,-1	.462,-1	.509,-1	.673,-2
11	.356,-1	.510,-1	.210,-1	.217,-1	.191,-1
12	.467,-1	-.499,-1	-.552,-2	.495,-1	.271,-2
13	.646,-1	.142,-1	.167,-1	.478,-1	.267,-2
14	.458,-1	.256,-1	.205,-1	-.220,-1	-.247,-1
15	.174,-1	-.104,-1	.479,-1	.450,-2	-.116,-1
16	.168,-1	.417,-1	-.920,-2	.110,-2	-.781,-1
17	.400,-1	.448,-2	-.100,-1	-.543,-1	-.992,-2
18	-.114,-1	.813,-2	.402,-2	.458,-2	-.600,-2
19	.337,-1	-.418,-1	.197,-2	-.194,-2	-.796,-2
20	.125,-1	.498,-1	-.522,-1	-.300,-1	-.229,-1
21	.279,-1	.484,-1	.140,-1	-.112,-1	-.153,-1
22	.570,-1	.161,-1	.150,-1	-.173,-1	.115,-1
23	-.153,-2	.251,-1	.252,-1	-.240,-1	.244,-2
24	.280,-1	.435,-2	-.208,-1	-.850,-2	-.487,-2
25	.468,-1	.288,-1	-.197,-1	-.390,-2	-.619,-2
26	.720,-1	.205,-1	.252,-1	-.170,-1	-.336,-2
27	-.575,-1	.306,-2	-.174,-1	-.334,-1	-.127,-1
28	.411,-1	.993,-2	-.461,-2	-.122,-1	-.967,-2
29	.714,-1	.827,-2	-.240,-2	.250,-1	-.480,-1
30	.887,-2	-.424,-1	.199,-1	.114,-1	-.379,-2
31	-.876,-2	.368,-1	.299,-1	.269,-2	-.525,-3
32	.605,-1	-.109,-1	-.226,-1	-.973,-2	.481,-2
33	-.975,-2	.168,-1	-.171,-1	-.274,-1	-.595,-2
34	-.200,-1	-.463,-1	-.188,-1	-.202,-2	.194,-1
35	.851,-3	-.777,-1	.276,-1	.119,-1	-.309,-1
36	.210,-1	-.100,-1	.862,-1	-.136,-1	.186,-1
37	-.360,-2	-.180,-1	-.679,-1	-.446,-1	.258,-2
38	-.997,-2	-.145,-1	.941,-2	-.502,-1	-.220,-1
39	.273,-1	-.317,-1	-.222,-1	.137,-1	.313,-2
40	.950,-1	-.106,-2	-.380,-1	.297,-1	-.252,-1
41	-.186,-2	.132,-1	-.277,-1	.789,-1	.130,-1
42	.447,-2	.410,-1	-.743,-1	.458,-1	.518,-1
43	.458,-1	.158,-1	-.100,-1	.278,-1	.298,-1
44	.770,-1	.653,-1	.289,-1	.597,-1	.198,-1
45	.276,-3	.199,-1	-.249,-1	.529,-1	.112,-1
46	-.714,-1	.312,-1	-.433,-1	-.120,-1	-.410,-1
47	.159,-1	.577,-1	-.124,-1	-.159,-1	-.242,-1
48	-.414,-1	.640,-1	-.210,-1	-.114,-1	.800,-3
49	.210,-1	.558,-1	.363,-2	.397,-1	-.876,-2
50	-.137,-1	.431,-1	.240,-1	-.986,-3	.595,-1
51	.189,-1	.133,-1	-.585,-1	.127,-1	.656,-1
52	.265,-1	-.155,-1	.824,-2	.153,-1	.190,-1
53	-.671,-1	-.240,-1	-.024,-2	-.203,-1	-.480,-2
54	-.150,-1	.229,-1	.182,-1	-.139,-1	-.137,-2
55	-.329,-1	-.415,-1	-.187,-2	-.349,-1	.560,-2
56	.901,-1	-.125,-1	-.413,-1	-.430,-1	-.983,-2
57	.366,-1	.176,-1	-.699,-1	-.435,-1	.126,-1
58	-.214,-1	-.108,-1	-.204,-1	.482,-2	-.209,-1
59	-.323,-1	-.592,-1	.425,-1	-.193,-2	-.140,-1
60	-.330,-1	-.424,-1	-.278,-1	.221,-1	.612,-2



Run No. 651 u component

K	Anemometer Position Number 1	2	3	4	5
00	1.000	1.000	1.000		1.000
01	.820	.702	.773		.741
02	.650	.507	.577		.540
03	.541	.407	.449		.436
04	.456	.339	.359		.361
05	.380	.291	.293		.269
06	.306	.246	.252		.214
07	.244	.191	.229		.197
08	.194	.144	.210		.185
09	.147	.988,-1	.197		.169
10	.110	.777,-1	.180		.137
11	.754,-1	.495,-1	.193		.969,-1
12	.581,-1	.485,-1	.194		.674,-1
13	.197,-1	.333,-1	.170		.404,-1
14	.111,-1	.153,-1	.132		.192,-1
15	.397,-2	.021,-2	.934,-1		-.148,-1
16	-.134,-1	-.347,-2	.769,-1		-.273,-1
17	-.336,-1	-.930,-2	.714,-1		-.524,-1
18	-.629,-1	.080,-2	.728,-1		-.421,-1
19	-.907,-1	.108,-1	.670,-1		-.183,-1
20	-.949,-1	-.193,-1	.529,-1		.138,-1
21	-.[illegible],-1	-.[illegible],-1	.545,-1		.310,-1
22	-.772,-1	-.445,-1	.689,-1		.327,-1
23	-.768,-1	-.337,-1	.664,-1		.424,-1
24	-.709,-1	-.120,-1	.467,-1		.157,-1
25	-.647,-1	.108,-1	.375,-1		-.274,-2
26	-.414,-1	.605,-2	.494,-1		.189,-1
27	-.202,-1	-.544,-2	.[illegible],-1		.125,-1
28	-.225,-1	.145,-1	.505,-1		.189,-1
29	-.760,-2	.418,-1	.517,-1		.228,-1
30	.197,-1	.395,-1	.501,-1		.204,-1
31	.363,-1	.370,-1	.438,-1		.254,-1
32	.421,-1	.171,-1	.384,-1		.247,-1
33	.329,-1	.230,-1	.500,-1		.133,-1
34	.334,-1	.309,-1	.892,-1		.140,-1
35	.524,-1	.491,-1	.104		.279,-1
36	.752,-1	.325,-1	.966,-1		.500,-1
37	.827,-1	.455,-1	.755,-1		.746,-1
38	.796,-1	.351,-1	.942,-1		.718,-1
39	.814,-1	.435,-1	.486,-1		.875,-1
40	.834,-1	.788,-1	.440,-1		.980,-1
41	.939,-1	.709,-1	.499,-1		.109
42	.941,-1	.508,-1	.590,-1		.980,-1
43	.976,-1	.832,-1	.705,-1		.845,-1
44	.996,-1	.912,-1	.778,-1		.541,-1
45	.871,-1	.574,-1	.708,-1		.121,-1
46	.673,-1	.219,-1	.657,-1		-.243,-2
47	.572,-1	.115,-1	.714,-1		.227,-1
48	.490,-1	.765,-2	.636,-1		.257,-1
49	.333,-1	.218,-2	.535,-1		.217,-1
50	.195,-1	.286,-2	.446,-1		.190,-1
51	.249,-1	.995,-3	.304,-1		.358,-1
52	.469,-1	.136,-1	.169,-1		.470,-1
53	.619,-1	.165,-1	.904,-2		.427,-1
54	.657,-1	.814,-2	-.113,-2		.168,-1
55	.551,-1	.289,-1	-.170,-1		.150,-1
56	.450,-1	.418,-1	-.307,-1		.223,-1
57	.460,-1	.477,-1	-.272,-1		.274,-1
58	.441,-1	.455,-1	-.281,-1		.219,-1
59	.354,-1	.642,-1	-.666,-1		.509,-1
60	.210,-1	.583,-1	-.982,-1		.748,-1

Run No. 651 v component

K	Anemometer Position Number 1	2	3	4	5
00	1.000	1.000	1.000		1.000
01	.590	.260	.550		.581
02	.391	.100	.301		.273
03	.258	.382,-1	.195		.990,-1
04	.836	.194,-2	.154		.120,-1
05	.168	.545,-1	.129		.437,-2
06	.145	.330,-1	.121		.230,-1
07	.165	.347,-1	.882,-1		.310,-1
08	.128	.741,-1	.400,-1		.486,-1
09	.124	.791,-1	.269,-1		.492,-1
10	.882,-1	.631,-2	.363,-1		.998,-1
11	.826,-1	.835,-1	.598,-1		.120
12	.111	.715,-1	.882,-1		.101
13	.151	.486,-1	.108		.105
14	.136	.479,-1	.110		.918,-1
15	.125	.335,-1	.764,-1		.716,-1
16	.923,-1	.812,-1	.619,-1		.634,-1
17	.843,-1	.508,-1	.561,-1		.325,-1
18	.790,-1	.479,-1	.488,-1		-.563,-2
19	.918,-1	.848,-2	.635,-1		-.895,-1
20	.961,-1	.472,-1	.998,-1		-.409,-1
21	.155	.908,-1	.105		-.125,-1
22	.109	.648,-1	.898,-1		.156,-1
23	.160	.883,-1	.755,-1		.560,-1
24	.139	.702,-1	.490,-1		.706,-1
25	.155	.118	.526,-1		.904,-1
26	.151	.503,-1	.508,-1		.998,-1
27	.124	.178,-1	.915,-1		.942,-1
28	.110	.404,-1	.121		.804,-1
29	.121	.752,-1	.931		.714,-1
30	.144	.440,-1	.918,-1		.483,-1
31	.115	-.869,-2	.708,-1		.542,-1
32	.120	.727,-2	.699,-1		.240,-1
33	.135	.418,-1	.440,-1		.477,-1
34	.158	.571,-1	.526,-1		722,-1
35	.179	.404,-1	.706,-1		.865,-1
36	.180	.677,-1	.780,-1		.425,-1
37	.181	.783,-1	.474,-1		-.596,-2
38	.125	.901,-1	.693,-1		-.180,-1
39	.830,-1	.878,-1	.748,-1		.177,-1
40	.718,-1	.385,-1	.677,-1		.583,-1
41	.839,-1	.608,-1	.512,-1		.536,-1
42	.102	.858,-1	.561,-1		.730,-1
43	.815,-1	.344,-1	.573,-1		.805,-1
44	.105	.287,-1	.579,-1		-.347,-1
45	.138	.805,-1	.350,-1		-.361,-1
46	.106	.846,-1	.365,-3		.197,-1
47	.114	.369,-1	-.610,-2		.498,-1
48	.156	.798,-1	.690,-2		.597,-1
49	.149	.105	.517,-1		.809,-1
50	.959,-1	.598,-1	.653,-1		-.435,-1
51	.798,-1	-.116,-1	.728,-1		-.716,-1
52	.815,-1	-.271,-2	.777,-1		-.687,-1
53	.599,-1	.116,-1	.508,-1		-.665,-1
54	.586,-1	-.108,-1	.439,-1		-.682,-1
55	.762,-1	.372,-1	.771,-1		-.470,-1
56	.665,-1	.589,-1	.106		-.767,-2
57	.129	.479,-1	.906,-1		.368,-2
58	.122	.947,-1	.599,-1		.353,-1
59	.128	-.475,-2	.731,-1		.151,-1
60	.118	-.164,-1	.396,-1		.104,-1

Run No. 65; v component

K	Anemometer Position Number 1	2	3	4	5
00	1.000	1.000	1.000		1.000
01	.664,-1	.447,-1	.815,-1		.731,-1
02	.548,-1	.142,-1	.115,-1		-.286,-1
03	.555,-1	.202,-1	.450,-1		.605,-1
04	.746,-1	.212,-2	.106,-1		-.134,-1
05	-.117,-1	-.154,-1	-.864,-2		-.605,-1
06	-.290,-1	.187,-1	-.409,-1		-.286,-1
07	.845,-1	-.029,-1	.464,-1		-.408,-2
08	-.553,-1	-.107,-1	-.274,-1		.479,-2
09	.516,-1	.500,-1	-.492,-1		.127,-1
10	.208,-1	.127,-1	.541,-1		-.180,-1
11	.281,-1	-.255,-1	.448,-1		.210,-1
12	.268,-1	.404,-1	.197,-1		.324,-1
13	-.173,-1	.374,-2	.702,-2		.894,-2
14	.525,-2	-.[illegible],-2	.761,-1		.895,-2
15	.244,-1	.411,-1	.442,-1		-.319,-1
16	.[illegible],-4	-.477,-1	.445,-1		-.712,-2
17	-.155,-1	-.177,-1	-.247,-1		-.511,-1
18	-.549,-1	.572,-2	.407,-1		-.617,-1
19	-.[illegible],-2	-.111,-1	-.177,-1		.218,-2
20	-.641,-1	-.201,-1	-.525,-1		.[illegible],-2
21	-.409,-1	-.[illegible],-1	.166,-1		-.406,-1
22	-.210,-1	.124,-2	-.730,-1		.179,-1
23	-.[illegible],-1	.280,-2	-.177,-2		.467,-3
24	.[illegible],-2	-.[illegible],-1	-.174,-1		.300,-1
25	-.101,-1	.[illegible],-1	-.407,-1		-.135,-1
26	.400,-1	-.[illegible],-1	.119,-1		-.110,-1
27	.[illegible],-2	.219,-1	-.[illegible],-1		-.898,-2
28	.[illegible],-1	.140,-1	-.[illegible],-1		-.102,-1
29	-.518,-2	.[illegible],-1	.213,-1		.[illegible],-1
30	.504,-1	-.520,-2	.[illegible],-1		-.401,-2
31	.506,-1	.[illegible],-1	-.211,-1		.[illegible],-1
32	.[illegible],-1	-.[illegible],-1	-.[illegible],-1		.114,-1
33	.[illegible],-1	-.[illegible],-1	.214,-1		.513,-1
34	.442,-2	.[illegible],-1	.[illegible],-1		-.287,-1
35	-.[illegible],-1	-.[illegible],-1	-.[illegible],-1		.416,-1
36	-.[illegible],-2	.420,-2	.219,-2		.269,-1
37	-.101,-1	.223,-1	.185,-1		-.369,-1
38	.142,-1	-.[illegible],-1	-.[illegible],-1		.746,-2
39	.[illegible],-2	-.[illegible],-1	-.[illegible],-1		.144,-1
40	.[illegible],-2	.[illegible],-2	.[illegible],-2		-.[illegible],-1
41	-.[illegible],-1	.[illegible],-1	-.[illegible],-2		.[illegible],-2
42	.[illegible],-1	-.[illegible],-1	-.[illegible],-1		.[illegible],-1
43	.[illegible],-1	-.[illegible],-1	-.[illegible],-1		-.[illegible],-1
44	.[illegible],-1	-.[illegible],-1	.[illegible],-1		.421,-2
45	-.412,-1	.[illegible],-2	-.[illegible],-1		-.[illegible],-2
46	-.[illegible],-2	.[illegible],-1	-.[illegible],-1		.[illegible],-2
47	-.[illegible],-2	-.[illegible],-1	.[illegible],-2		.[illegible],-1
48	-.[illegible],-1	-.[illegible],-1	.[illegible],-1		-.[illegible],-1
49	-.[illegible],-2	.[illegible],-2	-.[illegible],-1		.[illegible],-2
50	.[illegible],-1	.[illegible],-2	-.[illegible],-1		.[illegible],-1
51	.[illegible],-1	-.[illegible],-1	.[illegible],-1		.[illegible],-1
52	-.[illegible],-1	-.[illegible],-1	-.[illegible],-1		.[illegible],-1
53	-.[illegible],-1	-.[illegible],-2	-.[illegible],-1		-.[illegible],-1
54	-.[illegible],-1	-.[illegible],-1	-.[illegible],-1		-.[illegible],-1
55	-.[illegible],-1	.[illegible],-1	-.[illegible],-1		.[illegible],-1
56	.[illegible],-3	.[illegible],-1	-.[illegible],-1		-.[illegible],-1
57	-.[illegible],-1	-.[illegible],-1	-.[illegible],-1		.[illegible],-1
58	.[illegible],-1	.[illegible],-3	-.[illegible],-1		.[illegible],-1
59	.[illegible],-1	-.[illegible],-1	-.[illegible],-1		-.[illegible],-1
60	.279,-1	.[illegible],-2	-.[illegible],-1		-.[illegible],-1

Run No. 66; u component

	Anemometer Position Number				
K	1	2	3	4	5
00	1.000	1.000	1.000	1.000	1.000
01	.757	.594	.670	.550	.579
02	.547	.447	.475	.462	.414
03	.394	.224	.191	.275	.227
04	.309	.162	.117	.174	.170
05	.262	.131	.940,-1	.116	.847,-1
06	.221	.106	.718,-1	.100	.704,-1
07	.199	.117	.505,-1	.919,-1	.[illegible],-1
08	.171	.819,-1	.901,-1	.934,-1	.694,-1
09	.157	.650,-1	.[illegible],-1	.610,-1	.687,-1
10	.132	.336,-1	.284,-1	.[illegible],-1	.460,-1
11	.117	.512,-1	.783,-1	.897,-1	.212,-1
12	.131	.651,-1	.210,-1	.[illegible],-1	.178,-1
13	.154	.545,-1	.173,-1	.777,-1	.219,-1
14	.164	.567,-1	.290,-1	.718,-1	-.531,-2
15	.127	.429,-1	.729,-1	.822,-1	-.767,-1
16	.954,-1	.148,-1	.470,-1	.478,-1	-.173,-1
17	.769,-1	.422,-1	.428,-1	.[illegible],-1	-.811,-2
18	.647,-1	.455,-1	.260,-1	.[illegible],-1	.624,-2
19	.647,-1	.681,-1	.215,-1	.[illegible],-1	.[illegible],-1
20	.832,-1	.775,-1	.550,-1	.255,-1	.612,-1
21	.102	.101	.526,-1	.[illegible],-2	.710,-1
22	.116	.967,-1	.116	.260,-1	.731,-1
23	.111	.108	.123	.575,-1	.912,-1
24	.103	.119	.121	.706,-1	.101
25	.923,-1	.906,-1	.126	.767,-1	.810,-1
26	.977,-1	.102	.121	.[illegible],-1	.748,-1
27	.827,-1	.994,-1	.103	.877,-1	.778,-1
28	.574,-1	.108	.107	.[illegible],-1	.122,-1
29	.389,-1	.107	.662,-1	.557,-1	-.166,-1
30	.782,-2	.513,-1	.656,-1	.110	.189,-1
31	.169,-1	.498,-1	.109	.150	.792,-1
32	.142,-1	.419,-1	.152	.14[illegible]	.916,-1
33	.452,-1	.416,-1	.179	.157	.887,-1
34	.414,-1	.359,-1	.175	.119	.107
35	.407,-1	.397,-1	.134	.110	.128
36	.558,-1	.621,-1	.117	.106	.121
37	.607,-1	.491,-1	.913,-1	.771,-1	.966,-1
38	.688,-1	.433,-1	.987,-1	.[illegible],-1	.527,-1
39	.725,-1	.638,-1	.102	.187,-1	.475,-1
40	.913,-1	.825,-1	.553,-1	.142,-1	.987,-1
41	.913,-1	.781,-1	.582,-2	.175,-1	.118,-1
42	.705,-1	.581,-1	.[illegible],-2	-.495,-2	.107,-1
43	.590,-1	.396,-1	.191,-1	.424,-2	.304,-1
44	.560,-1	.227,-1	.174,-1	-.207,-1	.505,-1
45	.751,-1	.279,-1	.111,-1	.240,-1	.827,-1
46	.844,-1	.503,-1	.305,-1	.165,-1	.558,-1
47	.855,-1	.700,-1	.396,-1	.234,-1	.806,-1
48	.850,-1	.301,-1	.399,-1	.696,-1	.177,-1
49	.751,-1	.457,-2	.521,-1	.437,-1	.456,-1
50	.613,-1	.358,-1	.660,-1	.981,-2	.715,-1
51	.665,-1	.492,-2	.892,-1	-.140,-2	.403,-1
52	.867,-1	.194,-1	.812,-1	.527,-2	.456,-1
53	.114	.663,-1	.946,-1	.453,-2	.514,-1
54	.139	.107	.101	.489,-1	.697,-1
55	.184	.119	.115	.807,-1	.134
56	.108	.120	.136	.822,-1	.122
57	.105	.127	.130	.118	.112
58	.120	.151	.906,-1	.120	.131
59	.150	.168	.583,-1	.871,-1	.110
60	.173	.167	.466,-1	.874,-1	.847,-1



Run No. 66; v component

K	Anemometer Position Number 1	2	3	4	5
00	1.000	1.000	1.000	1.000	1.000
01	.[illegible]	.439	.612	.722	.554
02	.264	.314	.[illegible]	.587	.275
03	.215	.283	.267	.520	.12[illegible]
04	.211	.250	.220	.485	.981,-1
05	.244	.217	.236	.442	.101
06	.255	.225	.245	.411	.982,-1
07	.261	.211	.281	.396	.885,-1
08	.2[illegible]	.265	.295	.375	.859,-1
09	.265	.249	.271	.365	.829,-1
10	.274	.256	.281	.375	.851,-1
11	.277	.312	.293	.397	.781,-1
12	.287	.297	.295	.400	.935,-1
13	.280	.317	.289	.380	.132
14	.295	.300	.244	.382	.120
15	.280	.254	.230	.396	.101
16	.283	.235	.225	.400	.129
17	.275	.234	.216	.396	.111
18	.291	.199	.224	.372	.114
19	.275	.252	.226	.379	.847,-1
20	.248	.303	.234	.403	.978,-1
21	.241	.303	.273	.389	.107
22	.267	.283	.269	.380	.112
23	.278	.279	.251	.359	.866,-1
24	.267	.281	.236	.329	.934,-1
25	.303	.309	.228	.338	.938,-1
26	.266	.258	.236	.348	.505,-1
27	.276	.248	.226	.358	.260,-2
28	.299	.200	.202	.352	.151,-2
29	.272	.238	.230	.362	.156,-1
30	.257	.217	.198	.361	.834,-1
31	.276	.225	.208	.366	.129
32	.241	.280	.188	.364	.107
33	.257	.297	.210	.334	.961,-1
34	.286	.275	.263	.340	.618,-1
35	.278	.297	.271	.309	.359,-1
36	.310	.275	.291	.316	.997,-2
37	.291	.259	.248	.333	.146,-1
38	.281	.252	.216	.347	.521,-2
39	.269	.265	.195	.348	.103,-1
40	.224	.223	.195	.322	.550,-1
41	.257	.222	.191	.329	.551,-1
42	.253	.200	.212	.351	.900,-1
43	.259	.231	.204	.357	.921,-1
44	.254	.245	.226	.358	.944,-1
45	.267	.249	.248	.366	.838,-1
46	.290	.253	.267	.372	.746,-1
47	.251	.261	.273	.389	.107
48	.241	.276	.259	.376	.102
49	.242	.270	.230	.375	.110
50	.252	.253	.212	.375	.117
51	.240	.217	.208	.362	.132
52	.233	.198	.218	.347	.143
53	.264	.205	.196	.351	.153
54	.279	.217	.16[illegible]	.369	.127
55	.283	.201	.156	.359	.922,-1
56	.244	.232	.16[illegible]	.354	.710,-1
57	.216	.212	.218	.359	.644,-1
58	.237	.220	.259	.357	.732,-1
59	.212	.235	.277	.365	.253,-1
60	.247	.274	.236	.372	.625,-1

Run No. 66; w component

	Anemometer Position Number				
K	1	2	3	4	5
00	1.000	1.000	1.000	1.000	1.000
01	.646,-1	.536,-2	.401,-1	.126	.446,-1
02	.906,-1	.139,-1	.123,-1	.111	.[illegible],-1
03	-.612,-2	.869,-1	.[illegible]4,-1	.[illegible],-1	-.142,-2
04	-.218,-2	.244,-1	.[illegible]2,-1	.[illegible],-1	-.1[illegible],-1
05	.575,-1	.157,-1	.041,-1	.100	-.[illegible],-2
06	.241,-2	-.234,-1	-.121,-1	.[illegible],-1	.[illegible],-2
07	.[illegible],-1	.[illegible],-1	-.[illegible],-1	.[illegible],-1	.[illegible],-1
08	-.[illegible],-1	.217,-2	.254,-1	.[illegible],-1	-.401,-1
09	.210,-1	.778,-2	-.[illegible]7,-1	.[illegible],	.20[illegible],-1
10	.[illegible]00,-1	.21[illegible],-2	-.141,-2	.47[illegible],-1	.[illegible],-1
11	.170,-1	-.[illegible]00,-1	.612,-2	.[illegible]7[illegible],-1	-.[illegible],-1
12	.22[illegible],-1	-.[illegible]99,-1	-.[illegible]08,-1	.11[illegible],-1	.[illegible]42,-1
13	.279,-1	-.598,-1	.[illegible]86,-1	.[illegible]30,-1	-.[illegible]49[illegible],-2
14	.25[illegible],-1	.151,-1	-.[illegible]48,-1	.[illegible]50,-1	-.[illegible]20[illegible],-2
15	.[illegible]04,-2	.199,-1	-.[illegible]13,-1	.[illegible]40,-1	-.[illegible]44,-2
16	-.[illegible]28,-1	-.[illegible]93,-1	-.[illegible]71,-1	.[illegible]40,-2	.[illegible]39,-1
17	-.655,-1	.750,-1	.711,-[illegible]	.[illegible]27,-1	-.[illegible]27[illegible],-1
18	.108,-1	.325,-1	-.[illegible]97,-1	-.[illegible]20,-2	-.[illegible]20[illegible],-1
19	.[illegible]47,-1	-.128,-2	.[illegible]55,-1	.[illegible]12,-1	-.[illegible]02,-2
20	.766,-3	.[illegible]78,-2	-.[illegible]54,-1	.[illegible]34,-1	-.[illegible]44,-1
21	.[illegible]15,-2	.[illegible]44,-2	.[illegible]60[illegible],-1	-.[illegible]30,-1	-.[illegible]14,-1
22	.[illegible]22,-2	-.[illegible]01,-2	.[illegible]43,-1	.[illegible]61,-1	.144,-2
23	.[illegible]54,-1	-.[illegible]54,-1	.[illegible]21[illegible],-1	.[illegible]43,-2	.[illegible]12,-1
24	-.[illegible]70,-3	.[illegible]47,-2	.[illegible]52,-1	-.[illegible]27,-1	.[illegible]70,-2
25	.[illegible]52,-2	.[illegible]27,-2	-.[illegible]76,-2	.[illegible]72,-1	.[illegible]44,-1
26	-.[illegible]19,-1	-.[illegible]21[illegible],-1	.[illegible]40,-2	-.[illegible]95,-2	.[illegible]27,-1
27	-.[illegible]00,-1	.[illegible]54,-1	.[illegible]43,-2	-.[illegible]40,-1	.[illegible]99,-1
28	.[illegible]35,-1	.[illegible]99,-1	.[illegible]21[illegible],-1	-.[illegible]07,-1	-.[illegible]17,-1
29	.[illegible]78,-1	.[illegible]07,-1	.[illegible]41,-1	-.[illegible]89[illegible],-1	.[illegible]28,-1
30	-.247,-1	-.117,-1	-.[illegible]07,-2	.[illegible]54,-1	.[illegible]95,-2
31	-.[illegible]05,-2	-.[illegible]42,-1	.[illegible]02,-1	.[illegible]30,-2	.[illegible]25,-1
32	-.109,-1	.[illegible]00,-1	-.[illegible]29[illegible],-1	.[illegible]07,-2	-.[illegible]57,-1
33	-.[illegible]14,-1	.[illegible]11,-2	.[illegible]07,-1	-.[illegible]44,-2	.[illegible]01,-1
34	.197,-1	-.[illegible]12,-1	.[illegible]23,-2	.[illegible]79[illegible],-2	-.[illegible]22,-1
35	.[illegible]46,-1	-.[illegible]19,-1	-.[illegible]42[illegible],-1	-.[illegible]44,-1	.[illegible]14,-1
36	.[illegible]77,-1	-.[illegible]11,-2	.[illegible]51,-1	-.[illegible]41,-2	.[illegible]20[illegible],-2
37	.[illegible]13,-1	-.[illegible]60[illegible],-1	-.[illegible]9[illegible],-1	-.[illegible]99[illegible],-1	.[illegible]21,-1
38	-.[illegible]74,-1	-.[illegible]31,-1	.[illegible]20[illegible],-1	-.[illegible]44,-1	-.[illegible]26,-2
39	.[illegible]76,-2	.[illegible]17,-1	.[illegible]63,-1	-.[illegible]1[illegible],-1	-.[illegible]10[illegible],-1
40	-.[illegible]20,-1	-.[illegible]11,-2	-.[illegible]44,-1	.[illegible]52,-1	-.[illegible]07,-2
41	.[illegible]40,-1	.[illegible]45[illegible],-1	-.[illegible]19[illegible],-2	.[illegible]21[illegible],-1	.[illegible]28[illegible],-2
42	.[illegible]42,-1	-.[illegible]11,-1	.[illegible]14,-2	-.[illegible]01,-1	.[illegible]20[illegible],-1
43	.[illegible]19,-1	.[illegible]09,-2	.[illegible]15[illegible],-2	.[illegible]10[illegible],-1	.[illegible]01,-1
44	.[illegible]20,-1	.[illegible]94,-2	-.[illegible]96,-2	.[illegible]12,-2	.[illegible]07,-1
45	.[illegible]46,-1	-.[illegible]46,-1	-.[illegible]81,-1	.[illegible]57,-1	.[illegible]55[illegible],-1
46	.[illegible]35,-1	.[illegible]42,-1	.[illegible]27,-1	.[illegible]79[illegible],-2	.[illegible]11,-1
47	.[illegible]56,-1	.[illegible]97,-1	.[illegible]94[illegible],-2	-.[illegible]41,-1	-.[illegible]1[illegible],-1
48	.[illegible]12,-1	.[illegible]97,-1	-.[illegible]24,-1	-.[illegible]1[illegible],-2	-.[illegible]14,-2
49	.[illegible]21,-1	.[illegible]00,-2	.[illegible]45,-2	-.[illegible]0[illegible],-2	-.[illegible]14,-2
50	.[illegible]00,-1	-.[illegible]02,-2	-.[illegible]26[illegible],-2	.[illegible]07,-2	.[illegible]19[illegible],-1
51	-.[illegible]76,-1	.[illegible]14,-1	.[illegible]33,-1	-.[illegible]41[illegible],-1	-.[illegible]03,-1
52	.[illegible]05,-1	-.[illegible]06,-1	.[illegible]20[illegible],-1	.[illegible]02,-1	.[illegible]14,-1
53	-.[illegible]23,-1	-.[illegible]97,-2	-.[illegible]20[illegible],-1	-.[illegible]55,-2	.[illegible]72,-1
54	.[illegible]58,-1	-.[illegible]37,-1	.[illegible]79[illegible],-2	-.[illegible]41,-[illegible]	-.[illegible]94,-2
55	.[illegible]21,-1	-.[illegible]20,-2	-.[illegible]4[illegible],-1	.[illegible]20[illegible],-1	.[illegible]42,-1
56	.[illegible]69,-1	.[illegible]75,-2	-.[illegible]11,-1	.[illegible]27,-1	.[illegible]10,-2
57	.[illegible]48,-2	.[illegible]69,-2	.[illegible]55,-1	.[illegible]02,-1	.[illegible]42,-1
58	.[illegible]15,-1	-.[illegible]97,-1	-.[illegible]55[illegible],-1	-.[illegible]02,-2	.[illegible]51,-2
59	-.[illegible]90,-1	.[illegible]48,-2	-.[illegible]24,-1	.[illegible]56,-1	.[illegible]93,-1
60	.[illegible]15,-1	.[illegible]33,-2	.445,-1	.[illegible]05,-1	-.[illegible]49,-1

Run No. 57: u component

	Anemometer Position Number				
Y	1	2	3	4	5
00	1.000	1.000	1.000	1.000	1.000
01	.604	.728	.663	.675	.537
02	.501	.630	.495	.468	.368
03	.352	.398	.424	.363	.217
04	.243	.285	.335	.278	.168
05	.101	.182	.285	.238	.113
06	.118	.127	.256	.229	.831,-1
07	.713,-1	.108	.243	.198	.943,-1
08	.405,-1	.638,-1	.220	.181	.741,-1
09	.320,-1	.599,-1	.204	.195	.771,-1
10	.284,-1	.240,-1	.167	.200	.886,-1
11	.540,-1	.120,-1	.134	.160	.670,-1
12	.670,-1	.120,-1	.138	.133	.603,-1
13	.693,-1	.114,-1	.126	.111	.617,-3
14	.100	.135,-1	.105	.800,-1	.387,-1
15	.874,-1	.303,-1	.131	.100	.387,-1
16	.846,-1	.441,-1	.129	.116	.356,-1
17	.819,-1	.542,-1	.123	.106	.430,-1
18	.459,-1	.433,-1	.118	.105	.525,-1
19	.103,-1	.127,-1	.107	.126	.498,-1
20	-.684,-2	.185,-1	.126	.822,-1	.329,-1
21	-.839,-2	.120,-1	.148	.705,-1	-.722,-2
22	-.243,-1	.175,-2	.180	.703,-1	.122,-2
23	-.532,-1	-.200,-1	.191	.885,-1	-.109,-1
24	-.790,-1	-.444,-1	.176	.944,-1	-.101,-1
25	-.713,-1	-.459,-1	.181	.124	.124,-1
26	-.705,-1	-.392,-1	.152	.116	.243,-1
27	-.589,-1	-.349,-1	.134	.136	.137,-1
28	-.580,-1	-.311,-1	.139	.185	.134,-1
29	-.702,-1	-.704,-1	.139	.122	.255,-1
30	-.832,-1	-.105	.175	.117	.389,-1
31	-.686,-1	-.109	.171	.112	.102,-3
32	-.504,-1	-.846,-1	.139	.117	.578,-2
33	-.136,-1	-.622,-1	.129	.105	.430,-2
34	-.536,-2	-.511,-1	.129	.904,-1	.284,-1
35	-.152,-2	-.358,-1	.135	.111	.347,-1
36	.158,-1	-.363,-1	.123	.126	.485,-1
37	.103,-1	-.242,-1	.114	.110	.505,-1
38	.101,-1	-.319,-1	.130	.865,-1	.427,-1
39	-.153,-1	-.192,-1	.128	.536,-1	.231,-1
40	.245,-2	-.245,-1	.125	.548,-1	.249,-1
41	.309,-1	-.373,-1	.131	.770,-1	.304,-1
42	.507,-1	-.251,-1	.161	.102	.383,-1
43	.601,-1	-.214,-1	.167	.990,-1	.466,-2
44	.100	-.136,-1	.150	.103	.544,-1
45	.116	-.200,-1	.100	.933,-1	.608,-1
46	.100	-.108,-1	.175	.725,-1	.313,-1
47	.120	-.172,-1	.195	.631,-1	-.290,-2
48	.141	-.207,-1	.205	.716,-1	-.224,-1
49	.143	-.126,-1	.203	.433,-1	-.134,-1
50	.993,-1	-.293,-1	.189	.331,-1	-.880,-3
51	.697,-1	-.419,-1	.189	.369,-1	-.896,-2
52	.291,-1	-.180,-1	.212	.552,-1	-.529,-1
53	-.727,-3	-.305,-2	.206	.218,-1	-.373,-1
54	.153,-2	.539,-2	.168	.411,-1	-.288,-1
55	.202,-2	.581,-2	.172	.471,-1	-.525,-1
56	.523,-2	.578,-2	.161	.434,-1	-.378,-1
57	-.198,-2	-.137,-3	.117	.359,-1	-.373,-1
58	.103,-1	.439,-2	.103	.444,-1	-.338,-1
59	.980,-2	.943,-2	.109	.697,-1	-.316,-1
∞	.255,-1	.209,-2	.793,-1	.713,-1	-.726,-3

Run No. 67: v component

K	Anemometer Position Number 1	2	3	4	5
00	1.000	1.000	1.000	1.000	1.000
01	.442	.571	.[illegible]	.795	.[illegible]
02	.142	.344	.795	.162	.420
03	.107	.314	.698	.545	.366
04	.106	.292	.633	.454	.339
05	.913,-1	.248	.583	.392	.291
06	.936,-1	.223	.504	.351	.281
07	.128	.222	.443	.325	.278
08	.136	.225	.400	.297	.284
09	.177	.235	.356	.302	.304
10	.154	.199	.312	.300	.315
11	.151	.140	.280	.308	.289
12	.180	.144	.261	.320	.284
13	.168	.154	.25[illegible]	.289	.[illegible]
14	.160	.167	.242	.255	.245
15	.144	.190	.243	.255	.231
16	.172	.255	.251	.262	.[illegible]
17	.138	.190	.250	.277	.234
18	.711,-1	.215	.262	.292	.250
19	.751,-1	.222	.260	.315	.264
20	.118	.197	.260	.290	.250
21	.116	.217	.275	.295	.240
22	.122	.223	.286	.282	.229
23	.146	.190	.295	.285	.219
24	.125	.124	.312	.296	.196
25	.147	.145	.328	.293	.174
26	.157	.151	.341	.296	.167
27	.134	.132	.349	.286	.152
28	.107	.189	.353	.295	.168
29	.110	.217	.354	.312	.208
30	.141	.243	.332	.311	.230
31	.175	.212	.330	.296	.207
32	.125	.223	.328	.287	.227
33	.115	.230	.324	.277	.205
34	.103	.217	.314	.275	.228
35	.919,-1	.222	.301	.278	.242
36	.780,-1	.164	.285	.288	.211
37	.113	.171	.267	.271	.204
38	.122	.186	.248	.263	.242
39	.110	.212	.241	.268	.251
40	.803,-1	.174	.244	.293	.247
41	.850,-1	.160	.254	.331	.279
42	.861,-1	.166	.275	.315	.256
43	.931,-1	.162	.288	.292	.235
44	.717,-1	.149	.299	.277	.237
45	.607,-1	.119	.298	.252	.224
46	.100	.126	.282	.252	.225
47	.104,-1	.132	.254	.220	.240
48	.131	.113	.249	.220	.216
49	.109	.124	.257	.194	.233
50	.142	.142	.264	.166	.248
51	.131	.169	.265	.161	.214
52	.769,-1	.129	.251	.151	.206
53	.120	.149	.238	.152	.211
54	.127	.156	.225	.156	.222
55	.114	.176	.224	.142	.204
56	.994,-1	.166	.224	.147	.187
57	.116	.125	.233	.150	.189
58	.607,-1	.146	.245	.165	.251
59	.821,-1	.148	.256	.175	.222
60	.146	.176	.260	.187	.182

Run No. 67; w component

	Anemometer Position Number				
K	1	2	3	4	5
00	1.000	1.000	1.000	1.000	1.000
01	.926,-1	.10?	.106	.924,-1	.572,-1
02	.248,-1	.227,-1	.207,-1	.429,-1	.342,-1
03	.420,-1	.142,-1	.119,-1	.359,-1	.648,-1
04	.?7?,-1	-.196,-1	.2?0,-1	.2??,-1	.569,-1
05	-.819,-2	.109,-1	.270,-2	.756,-1	.729,-1
06	-.228,-1	.241,-1	-.952,-2	.426,-1	-.170,-1
07	.?58,-2	.149,-1	-.309,-1	.119,-1	.269,-1
08	-.569,-1	-.165,-1	-.20?,-1	.421,-1	.211,-1
09	-.449,-1	.201,-1	-.?77,-1	.238,-1	.590,-1
10	-.626,-1	-.971,-1	.052,-2	.174,-1	.271,-1
11	.229,-1	-.110,-1	-.171,-2	-.309,-1	.791,-2
12	.?55,-1	-.109,-2	-.20?,-1	-.701,-1	-.250,-1
13	-.109,-1	.140,-1	.417,-1	-.099,-2	-.179,-1
14	-.2??,-1	-.50?,-2	-.109,-1	-.6??,-2	.?05,-2
15	.481,-1	-.120,-1	.163,-1	.785,-2	.699,-2
16	-.182,-2	.187,-1	.?14,-1	.120,-1	.900,-2
17	.?21,-2	.140,-1	.?44,-1	-.359,-2	.121,-1
18	.405,-1	.?57,-1	.544,-1	.2??,-1	.847,-2
19	-.105,-1	-.109,-1	-.?94,-2	-.109,-1	.159,-1
20	-.524,-1	-.?83,-2	-.?67,-1	.?20,-1	.485,-1
21	-.?05,-1	.501,-1	.???,-1	-.511,-1	.576,-2
22	.416,-1	.505,-1	.3??,-2	-.284,-1	.109,-1
23	.?58,-2	.164,-1	.144,-1	.?05,-1	.604,-1
24	.109,-1	.1??,-1	-.120,-1	.100	.259,-1
25	.127,-1	.190,-1	.562,-2	.152	.429,-1
26	.650,-2	.117,-1	.2??,-1	.565,-1	.?42,-1
27	.150,-1	.570,-2	-.124,-1	-.583,-1	-.?64,-1
28	-.?11,-1	-.104,-1	-.416,-2	.?66,-1	.493,-1
29	.241,-2	-.507,-1	-.270,-1	.470,-1	.196,-1
30	.210,-1	-.143,-1	-.?60,-2	-.?68,-1	-.?04,-1
31	-.?40,-1	-.474,-1	-.?14,-1	-.?91,-1	.501,-2
32	.45?,-1	-.4??,-1	.105,-1	.164,-1	.414,-1
33	-.?15,-1	.493,-1	.157,-1	.522,-1	.570,-1
34	.174,-1	.163,-1	-.2??,-1	.?2?,-1	-.?26,-1
35	.???,-?	-.195,-1	-.?16,-1	.?0?,-1	.422,-1
36	-.?5?,-1	.?00,-1	.?42,-1	-.?91,-?	.?74,-1
37	.467,-1	.117,-?	-.157,-1	.?49,-1	.105,-1
38	-.179,-1	-.?89,-?	-.?3?,-1	-.170,-1	.111,-1
39	.124,-1	.650,-1	-.?09,-1	.?43,-1	.163,-1
40	-.452,-1	-.?44,-1	-.?16,-1	.441,-2	-.117,-1
41	-.?74,-1	-.536,-2	-.?00,-?	-.?0?,-2	.110,-1
42	.44?,-?	.?97,-2	.?3?,-1	-.?2?,-1	.629,-2
43	-.?5?,-1	-.?57,-1	.??9,-1	-.?45,-1	.763,-1
44	.?94,-1	.50?,-1	.?71,-1	-.?43,-1	.?47,-1
45	.15?,-1	-.?54,-?	.?2?,-1	.619,-1	.611,-2
46	-.1?5,-?	.1?5,-1	.?0?,-1	-.?72,-?	.?54,-1
47	-.4??,-1	-.4??,-1	.?17,-1	-.?2?,-1	.421,-1
48	.?00,-?	.?2?,-?	.561,-1	.?57,-1	.402,-1
49	.597,-1	.128,-1	.167,-1	.516,-1	-.4??,-?
50	.114,-1	.?77,-?	-.241,-1	-.621,-1	-.477,-2
51	.?46,-?	-.?2?,-1	.?2?,-?	-.?64,-1	-.805,-2
52	.469,-1	-.?42,-?	-.?07,-1	-.?66,-1	.154,-1
53	.?09,-2	-.?27,-1	-.175,-1	-.107	.5y1,-1
54	-.1??,-1	-.1??,-1	.219,-1	.476,-1	-.503,-1
55	-.?2?,-1	-.291,-1	-.4??,-2	.?05,-1	-.471,-1
56	-.1?7,-1	.165,-1	-.?21,-1	.?5?,-1	-.442,-1
57	-.1??,-1	-.? ,-1	-.412,-1	.?40,-1	-.169,-1
58	.154,-2	-.?5?,-1	-.1??,-1	-.1??,-1	-.5?0,-?
59	-.?6?,-1	-.?27,-1	.165,-1	.?12,-1	.477,-2
60	.1??,-1	.?14,-?	.?11,-1	.?7?,-1	-.169,-1

Run No. 001 u component

	Anemometer Position Number				
K	1	2	3	4	5
00	1.000	1.000	1.000	1.000	1.000
01	.790	.776	.836	.825	.790
02	.661	.631	.703	.689	.659
03	.569	.552	.642	.617	.590
04	.500	.502	.615	.580	.577
05	.476	.473	.591	.554	.500
06	.464	.458	.579	.532	.500
07	.456	.437	.566	.517	.468
08	.456	.432	.549	.494	.445
09	.431	.419	.527	.487	.405
10	.429	.394	.514	.506	.401
11	.407	.371	.503	.509	.401
12	.399	.360	.516	.491	.411
13	.395	.341	.511	.478	.399
14	.401	.346	.497	.461	.392
15	.396	.368	.495	.442	.395
16	.389	.385	.475	.490	.374
17	.386	.395	.466	.454	.365
18	.405	.390	.440	.454	.359
19	.407	.382	.440	.446	.392
20	.407	.395	.443	.446	.376
21	.402	.399	.443	.435	.371
22	.407	.387	.449	.424	.369
23	.378	.384	.437	.416	.374
24	.364	.402	.423	.405	.376
25	.357	.400	.421	.399	.392
26	.350	.401	.413	.372	.399
27	.353	.390	.418	.383	.391
28	.367	.387	.407	.387	.394
29	.376	.366	.401	.387	.402
30	.383	.355	.377	.405	.417
31	.374	.338	.363	.405	.397
32	.356	.307	.366	.405	.402
33	.327	.312	.366	.405	.399
34	.325	.316	.374	.405	.420
35	.321	.317	.386	.390	.401
36	.316	.326	.372	.394	.401
37	.319	.323	.369	.383	.448
38	.317	.326	.363	.367	.429
39	.323	.334	.374	.342	.417
40	.344	.352	.380	.335	.399
41	.350	.343	.402	.325	.399
42	.380	.333	.402	.322	.394
43	.390	.340	.393	.318	.376
44	.367	.342	.393	.312	.362
45	.330	.349	.390	.325	.381
46	.352	.356	.380	.345	.330
47	.360	.366	.369	.304	.316
48	.372	.354	.361	.360	.319
49	.381	.356	.369	.295	.345
50	.381	.365	.372	.362	.329
51	.350	.353	.380	.271	.320
52	.337	.357	.391	.304	.336
53	.326	.344	.380	.362	.316
54	.328	.323	.372	.279	.325
55	.323	.323	.363	.375	.329
56	.305	.302	.369	.382	.369
57	.305	.278	.372	.387	.356
58	.281	.272	.352	.379	.359
59	.280	.278	.325	.375	.348
60	.281	.294	.311	.390	.362



Run No. 68; v component

	Anemometer Position Number				
K	1	2	3	4	5
00	1.000	1.000	1.000	1.000	1.000
01	.515	.822	.846	.790	.541
02	.170	.671	.691	.598	.172
03	-.202,-1	.540	.568	.399	-.494,-1
04	-.402,-1	.436	.454	.255	-.140,-1
05	-.244,-1	.364	.354	.161	.[illegible],-1
06	.130,-1	.287	.284	.102	.[illegible],-1
07	.242,-1	.243	.234	.[illegible],-1	-.[illegible],-1
08	.426,-1	.212	.205	.504,-1	-.495,-1
09	.734,-1	.186	.186	.440,-1	.152,-2
10	.714,-1	.182	.177	.402,-1	.414,-1
11	.756,-1	.182	.186	.611,-1	.575,-1
12	.466,-1	.195	.196	.616,-1	.[illegible],-1
13	.952,-2	.200	.215	.550,-1	.265,-1
14	-.123,-1	.200	.218	.575,-1	.[illegible],-2
15	.479,-1	.192	.224	.646,-1	.[illegible],-1
16	.617,-1	.185	.228	.820,-1	.646,-1
17	.713,-1	.175	.251	.[illegible]12,-1	.[illegible],-1
18	.570,-1	.172	.266	.[illegible]91,-1	.155,-1
19	.[illegible]19,-1	.175	.287	.[illegible]22,-1	-.107,-1
20	.377,-1	.184	.276	.501,-1	-.870,-2
21	.389,-1	.186	.273	.524,-1	-.328,-2
22	.[illegible]02,-1	.191	.269	.561,-1	.845,-1
23	.[illegible]34,-1	.183	.251	.525,-1	.501,-1
24	.[illegible]23,-2	.190	.228	.420,-1	.[illegible]71,-1
25	.[illegible]34,-1	.192	.220	.167,-1	.[illegible]85,-1
26	.804,-1	.184	.208	.[illegible]85,-2	.[illegible]46,-1
27	.[illegible]30,-1	.167	.191	.124,-1	.[illegible]21,-1
28	.[illegible]47,-2	.160	.187	.160,-1	.498,-1
29	.[illegible]46,-2	.150	.[illegible]68	.461,-1	.516,-1
30	-.[illegible]20,-2	.[illegible]37	.161	.[illegible]33,-1	.[illegible]65,-1
31	.[illegible]81,-1	.[illegible]32	.[illegible]59	.[illegible]02,-1	.[illegible]08,-1
32	.[illegible]40,-1	.[illegible]45	.[illegible]52	.[illegible]32,-1	.[illegible]75,-1
33	.[illegible]81,-1	.[illegible]42	.[illegible]75	.[illegible]05,-1	.[illegible]97,-1
34	.[illegible]11,-1	.[illegible]74	.[illegible]74	.[illegible]00	.[illegible]21
35	.[illegible]89,-1	.[illegible]25	.[illegible]48	.[illegible]09	.[illegible]01,-1
36	.[illegible]66,-1	.[illegible]16	.[illegible]34	.[illegible]42,-1	.[illegible]77,-1
37	.[illegible]01,-2	.[illegible]15	.[illegible]59	.[illegible]75,-1	.[illegible]46,-1
38	-.[illegible]00,-1	.[illegible]82	.[illegible]71	.[illegible]74,-1	-.[illegible]96,-1
39	-.[illegible]96,-1	.[illegible]20	.[illegible]83	.[illegible]79,-1	-.[illegible]24,-1
40	.[illegible]70,-1	.[illegible]34,-1	.[illegible]01	.[illegible]40,-1	-.[illegible]61,-1
41	.[illegible]12	.[illegible]10,-1	.[illegible]30	.[illegible]62,-1	-.[illegible]74,-
42	.[illegible]77	.[illegible]50,-1	.[illegible]04	.[illegible]04,-1	.[illegible]05,-2
43	.[illegible]04,-1	.[illegible]42,-1	.[illegible]14	.[illegible]10,-1	-.[illegible]49,-2
44	.[illegible]58,-1	.[illegible]75,-1	.[illegible]24	.[illegible]79,-1	.[illegible]69,-2
45	-.[illegible]01,-1	.[illegible]20,-1	.[illegible]23	.[illegible]28,-1	.[illegible]45,-1
46	-.[illegible]17,-1	.[illegible]11,-1	.[illegible]27	.[illegible]02,-1	.[illegible]10,-1
47	-.[illegible]00,-1	.527,-1	.[illegible]20	.[illegible]97,-1	.[illegible]54,-2
48	.404,-2	.502,-1	.[illegible]27	.[illegible]96,-1	.[illegible]01,-1
49	.[illegible]00,-1	.441,-1	.[illegible]22	.[illegible]01	.[illegible]91,-1
50	.[illegible]01,-1	.[illegible]42,-1	.[illegible]12	.111	.[illegible]00
51	.102	.[illegible]50,-1	.[illegible]77	.[illegible]28	.474,-1
52	.[illegible]77,-1	.[illegible]27,-1	.[illegible]72	.[illegible]14	.[illegible]97,-2
53	.[illegible]02,-1	.[illegible]14,-1	.[illegible]78	.[illegible]55	-.[illegible]52,-2
54	-.[illegible]01,-1	.[illegible]50,-1	.[illegible]79	.[illegible]07	.[illegible]67,-1
55	-.[illegible]71,-1	.[illegible]60,-1	.[illegible]10	.[illegible]82,-1	.[illegible]95,-1
56	-.[illegible]57,-1	.[illegible]15,-1	.[illegible]27	.[illegible]01,-1	.[illegible]41,-1
57	-.[illegible]74,-1	.[illegible]01,-1	.[illegible]26	.[illegible]16,-2	-.[illegible]99,-1
58	-.[illegible]21,-1	.[illegible]10,-1	.[illegible]24	-.[illegible]30,-2	-.[illegible]26,-1
59	-.[illegible]75,-1	.[illegible]69,-1	.[illegible]16	-.[illegible]91,-2	.[illegible]78,-1
60	-.[illegible]82,-1	.[illegible]07,-1	.[illegible]20	.[illegible]14,-1	.470,-1

Run No. [illegible]; w component

K	Anemometer Position Number 1	2	3	4	5
00	1.000	1.000	1.000	1.000	1.000
01	-.459,-2	.[illegible],-1	.737,-1	.104	.10[illegible]
02	.[illegible],-2	-.500,-2	.470,-1	-.[illegible]12,-2	.70[illegible],-1
03	-.204,-1	-.[illegible]73,-1	.[illegible]22,-1	.12[illegible],-1	-.[illegible]29,-1
04	-.[illegible]4,-2	-.26[illegible],-1	.172,-1	.1[illegible]0,-1	-.112,-[illegible]
05	.350,-1	.15[illegible],-1	.[illegible]26,-2	.179,-1	-.[illegible]72,-2
06	.104,-1	.301,-1	.[illegible]23,-1	.[illegible]91,-1	.[illegible]17,-1
07	-.240,-1	.[illegible]45,-1	.[illegible]75,-[illegible]	-.[illegible]47,-[illegible]	.[illegible]31,-1
08	-.410,-1	.249,-1	.212,-1	.[illegible]01,-1	-.[illegible]05,-1
09	.[illegible]30,-1	.[illegible]51,-2	.426,-1	.179,-1	-.217,-1
10	-.[illegible]1[illegible],-2	-.235,-1	-.[illegible]90[illegible],-2	-.[illegible]11,-1	-.[illegible],-1
11	.174,-1	-.[illegible]42[illegible],-2	-.[illegible]28,-1	.[illegible]18,-1	-.[illegible],-1
12	.247,-1	-.[illegible]44,-1	.[illegible]16,-1	-.[illegible]12,-1	.[illegible],-1
13	-.442,-1	-.400,-1	-.[illegible]95,-1	-.142,-1	.[illegible]01,-1
14	.103,-1	-.[illegible]2[illegible],-1	.[illegible]08,-1	.[illegible],-1	.[illegible]04,-1
15	-.571,-1	.[illegible]20[illegible],-2	-.[illegible]11,-1	.1[illegible],-1	.[illegible]04,-1
16	.277,-1	.195,-1	.[illegible]41[illegible],-[illegible]	.[illegible]42,-1	-.[illegible]2[illegible],-1
17	-.[illegible]30,-1	.[illegible]50,-1	.[illegible]42,-2	-.[illegible]2[illegible]0,-1	-.[illegible]20,-1
18	.[illegible]49[illegible],-1	.101,-1	.[illegible]39,-1	-.[illegible]09[illegible],-1	-.[illegible]40,-1
19	.[illegible]64,-1	-.[illegible]1[illegible],-1	-.[illegible]76,-2	-.[illegible]2[illegible]4,-1	-.[illegible]11,-1
20	-.818,-2	-.190,-1	-.[illegible]10,-1	.[illegible]20,-1	.[illegible]06,-2
21	.114,-1	.[illegible]40,-1	.[illegible]27,-2	.[illegible]49[illegible],-1	-.[illegible]54,-[illegible]
22	.[illegible]78,-2	.163,-1	-.[illegible]16,-1	.[illegible]4[illegible]2,-1	-.[illegible]9[illegible],-1
23	-.[illegible]27,-1	-.[illegible]31[illegible],-1	.[illegible]19,-1	.[illegible]14,-1	.[illegible]14,-1
24	-.159,-1	.[illegible]21,-1	.[illegible]12,-1	-.[illegible]90,-1	.[illegible]0,-1
25	.[illegible]18,-1	-.[illegible]87,-1	.[illegible]00,-1	.[illegible]71,-2	.[illegible]91,-1
26	-.[illegible]20,-1	-.[illegible]04,-[illegible]	-.[illegible]05,-1	-.[illegible]120,-1	.[illegible]82,-1
27	-.[illegible]56,-[illegible]	.[illegible]71,-1	-.[illegible]08,-[illegible]	-.[illegible]156,-1	.[illegible]44,-1
28	.[illegible]79,-1	-.[illegible]65,-[illegible]	.[illegible]83,-1	-.[illegible]202,-1	.[illegible]85,-[illegible]
29	-.[illegible]57,-1	-.[illegible]89,-[illegible]	.[illegible]74,-1	.[illegible]72[illegible],-[illegible]	.[illegible]45,-1
30	-.[illegible]43,-1	.[illegible]30,-1	.[illegible]57,-[illegible]	-.[illegible]14,-[illegible]	-.[illegible]31,-1
31	.[illegible]48,-1	.[illegible]15,-1	-.[illegible]87,-1	-.[illegible]271,-1	.[illegible]30,-1
32	.[illegible]87,-[illegible]	-.[illegible]45,-1	.[illegible]36,-[illegible]	.[illegible]19[illegible],-[illegible]	.[illegible]24,-1
33	-.[illegible]21,-[illegible]	-.[illegible]50[illegible],-1	.[illegible]07,-1	.[illegible]43,-1	-.[illegible]75,-1
34	-.178,-1	-.[illegible]56,-1	-.[illegible]71,-1	-.[illegible]920,-2	.[illegible]60,-[illegible]
35	-.[illegible]25,-1	-.[illegible]45,-1	.[illegible]03,-2	-.[illegible]10[illegible],-1	.[illegible]01,-1
36	-.[illegible]19,-1	.[illegible]28,-[illegible]	-.[illegible]87,-1	-.[illegible]211,-1	.[illegible]24,-1
37	.[illegible]13,-1	-.[illegible]67,-1	-.[illegible]86[illegible],-1	-.[illegible]96,-1	.[illegible]86,-1
38	.[illegible]80,-1	-.[illegible]33[illegible],-1	-.[illegible]98[illegible],-[illegible]	.[illegible]09[illegible],-[illegible]	.[illegible]76,-1
39	.[illegible]94,-1	-.[illegible]92,-1	-.[illegible]45,-1	-.[illegible]12,-1	.[illegible]19,-1
40	.[illegible]55,-1	-.[illegible]46,-1	-.[illegible]68,-1	-.[illegible]45,-1	.[illegible]20[illegible],-1
41	-.[illegible]02,-1	-.[illegible]71,-1	.[illegible]44,-1	-.[illegible]58,-[illegible]	[illegible]01,-1
42	.[illegible]51,-1	.[illegible]57,-[illegible]	.[illegible]76,-1	.[illegible]09,-1	.[illegible]85,-1
43	.[illegible]95,-1	-.[illegible]22,-1	-.[illegible]66,-1	.[illegible]99,-1	.[illegible]90,-1
44	-.[illegible]36,-1	.[illegible]18,-1	-.[illegible]16,-[illegible]	-.[illegible]05,-[illegible]	.[illegible]44,-[illegible]
45	-.[illegible]28,-1	-.[illegible]89,-1	-.[illegible]18,-1	-.[illegible]08,-1	.[illegible]41,-[illegible]
46	.[illegible]81,-1	.[illegible]82,-1	-.[illegible]00,-[illegible]	-.[illegible]14,-1	-.[illegible]68,-1
47	.[illegible]87,-1	.[illegible]18,-[illegible]	.[illegible]22,-1	.[illegible]29,-1	.[illegible]05,-1
48	.[illegible]27,-1	.[illegible]83,-1	-.[illegible]76,-[illegible]	-.[illegible]17,-1	-.[illegible]71,-1
49	.[illegible]70,-1	.[illegible]99,-1	-.[illegible]18,-[illegible]	-.[illegible]23,-1	.[illegible]75,-1
50	-.[illegible]97,-1	-.[illegible]95,-1	-.[illegible]50,-1	-.[illegible]64,-1	.[illegible]41,-1
51	-.[illegible]68,-[illegible]	-.[illegible]14,-1	-.[illegible]16,-1	-.[illegible]05,-[illegible]	.[illegible]36,-1
52	.[illegible]67,-1	-.[illegible]88,-1	-.[illegible]37,-[illegible]	.[illegible]99,-1	.[illegible]92,-1
53	.[illegible]59,-1	.[illegible]25,-[illegible]	.[illegible]68,-1	.[illegible]60,-1	-.[illegible]59,-1
54	.[illegible]95,-[illegible]	.[illegible]49,-1	-.[illegible]86,-[illegible]	.[illegible]83,-1	-.[illegible]84,-1
55	-.[illegible]25,-1	.[illegible]86,-1	.[illegible]93,-1	.[illegible]96,-1	-.[illegible]65,-1
56	-.[illegible]04,-1	-.[illegible]21,-1	.[illegible]08,-[illegible]	.[illegible]02,-[illegible]	-.[illegible]55,-1
57	.[illegible]41,-1	.[illegible]95,-[illegible]	-.[illegible]19,-1	.[illegible]15,-1	.[illegible]36,-[illegible]
58	-.[illegible]70,-[illegible]	-.[illegible]12,-[illegible]	.[illegible]87,-[illegible]	.[illegible]87,-1	.[illegible]70,-1
59	.[illegible]79,-1	-.[illegible]85,-1	-.[illegible]66,-1	.[illegible]23,-[illegible]	-.[illegible]90,-2
60	.[illegible]35,-[illegible]	-.[illegible]64,-[illegible]	-.[illegible]42,-1	-.[illegible]74,-1	.[illegible]93,-1

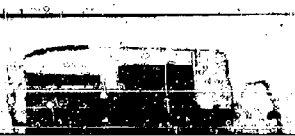

TABLE 17.6

Smoothed spectral density estimates, U_n, identified by eddy wind component; harmonic number, n; and anemometer number. (Pages 289 to 420.) Units are m^2/sec^2/unit frequency interval for all data except Runs 7 and 8 which are in units of percent of variance/unit frequency interval. To convert n to a cyclical frequency, multiply by 1/128 cycles/second.

Run No. 5; u component

N	Anemometer Position Number 1	2	3	4	5
00			.325	.368	
01			.231	.294	
02			.118	.156	
03			.950,-1	.900,-1	
04			.634,-1	.788,-1	
05			.385,-1	.632,-1	
06			.397,-1	.429,-1	
07			.299,-1	.364,-1	
08			.253,-1	.292,-1	
09			.217,-1	.357,-1	
10			.192,-1	.299,-1	
11			.194,-1	.227,-1	
12			.202,-1	.141,-1	
13			.153,-1	.113,-1	
14			.137,-1	.115,-1	
15			.124,-1	.106,-1	
16			.152,-1	.154,-1	
17			.176,-1	.159,-1	
18			.124,-1	.112,-1	
19			.102,-1	.992,-2	
20			.109,-1	.965,-2	
21			.100,-1	.108,-1	
22			.859,-2	.828,-2	
23			.768,-2	.985,-2	
24			.756,-2	.931,-2	
25			.653,-2	.886,-2	
26			.604,-2	.835,-2	
27			.574,-2	.876,-2	
28			.570,-2	.945,-2	
29			.564,-2	.877,-2	
30			.606,-2	.756,-2	
31			.714,-2	.682,-2	
32			.627,-2	.761,-2	
33			.546,-2	.597,-2	
34			.598,-2	.556,-2	
35			.590,-2	.542,-2	
36			.501,-2	.456,-2	
37			.562,-2	.553,-2	
38			.585,-2	.575,-2	
39			.401,-2	.467,-2	
40			.340,-2	.431,-2	
41			.292,-2	.496,-2	
42			.271,-2	.512,-2	
43			.350,-2	.534,-2	
44			.405,-2	.486,-2	
45			.297,-2	.392,-2	
46			.259,-2	.343,-2	
47			.329,-2	.299,-2	
48			.286,-2	.225,-2	
49			.266,-2	.280,-2	
50			.333,-2	.331,-2	
51			.397,-2	.296,-2	
52			.378,-2	.302,-2	
53			.340,-2	.432,-2	
54			.232,-2	.340,-2	
55			.205,-2	.335,-2	
56			.284,-2	.388,-2	
57			.299,-2	.428,-2	
58			.251,-2	.400,-2	
59			.190,-2	.328,-2	
60			.177,-2	.297,-2	

Run No. 5; v component

N	Anemometer Position Number 1	2	3	4	5
00			.47	.633	
01			.324	.40	
02			.121	.142	
03			.612,-1	.688,-1	
04			.596,-1	.622,-1	
05			.510,-1	.538,-1	
06			.309,-1	.369,-1	
07			.211,-1	.236,-1	
08			.161,-1	.174,-1	
09			.882,-2	.120,-1	
10			.778,-2	.971,-2	
11			.912,-2	.905,-2	
12			.698,-2	.892,-2	
13			.702,-2	.897,-2	
14			.722,-2	.706,-2	
15			.918,-2	.719,-2	
16			.110,-1	.831,-2	
17			.821,-2	.798,-2	
18			.557,-2	.714,-2	
19			.625,-2	.701,-2	
20			.571,-2	.557,-2	
21			.476,-2	.539,-2	
22			.294,-2	.524,-2	
23			.391,-2	.719,-2	
24			.567,-2	.600,-2	
25			.536,-2	.488,-2	
26			.419,-2	.502,-2	
27			.371,-2	.506,-2	
28			.408,-2	.465,-2	
29			.442,-2	.557,-2	
30			.501,-2	.547,-2	
31			.394,-2	.510,-2	
32			.391,-2	.414,-2	
33			.460,-2	.378,-2	
34			.398,-2	.336,-2	
35			.480,-2	.404,-2	
36			.406,-2	.441,-2	
37			.320,-2	.377,-2	
38			.338,-2	.330,-2	
39			.339,-2	.401,-2	
40			.371,-2	.331,-2	
41			.311,-2	.269,-2	
42			.287,-2	.276,-2	
43			.384,-2	.280,-2	
44			.378,-2	.240,-2	
45			.362,-2	.251,-2	
46			.418,-2	.199,-2	
47			.415,-2	.178,-2	
48			.354,-2	.269,-2	
49			.508,-2	.356,-2	
50			.329,-2	.409,-2	
51			.399,-2	.384,-2	
52			.420,-2	.337,-2	
53			.444,-2	.337,-2	
54			.565,-2	.275,-2	
55			.555,-2	.236,-2	
56			.412,-2	.267,-2	
57			.449,-2	.350,-2	
58			.306,-2	.416,-2	
59			.282,-2	.398,-2	
60			.235,-2	.359,-2	

Run No. 5; w component

N	Anemometer Position Number 1	2		4	5
00			.42[illegible],-2	.426,-2	
01			.50[illegible],-2	.435,-2	
02			.57[illegible],-2	.[illegible]81,-2	
03			.575,-2	.[illegible]42,-2	
04			.518,-2	.292,-2	
05			.400,-2	.25[illegible],-2	
06			.370,-2	.2[illegible]7,-2	
07			.[illegible]17,-2	.[illegible]41,-2	
08			.291,-2	.[illegible]32,-2	
09			.[illegible]91,-2	.[illegible]26,-2	
10			.402,-2	.269,-2	
11			.346,-2	.251,-2	
12			.306,-2	.292,-2	
13			.324,-2	.235,-2	
14			.318,-2	.171,-2	
15			.257,-2	.180,-2	
16			.241,-2	.225,-2	
17			.280,-2	.219,-2	
18			.298,-2	.170,-2	
19			.[illegible]5[illegible],-2	.16[illegible],-2	
20			.411,-2	.207,-2	
21			.322,-2	.254,-2	
22			.266,-2	.199,-2	
23			.265,-2	.189,-2	
24			.302,-2	.211,-2	
25			.296,-2	.187,-2	
26			.273,-2	.121,-2	
27			.255,-2	.166,-2	
28			.224,-2	.226,-2	
29			.207,-2	.197,-2	
30			.200,-2	.165,-2	
31			.222,-2	.168,-2	
32			.291,-2	.217,-2	
33			.347,-2	.276,-2	
34			.324,-2	.220,-2	
35			.242,-2	.172,-2	
36			.3[illegible],-2	.15[illegible],-2	
37			.[illegible]57,-2	.11[illegible],-2	
38			.311,-2	.15[illegible],-2	
39			.270,-2	.1[illegible]4,-2	
40			.1[illegible],-2	.151,-2	
41			.1[illegible]4,-2	.11[illegible],-2	
42			.27[illegible],-2	.10[illegible],-2	
43			.[illegible]15,-2	.1[illegible],-2	
44			.2[illegible],-2	.1[illegible],-2	
45			.242,-2	.1[illegible],-2	
46			.2[illegible],-2	.11[illegible],-2	
47			.2[illegible]0,-2	.1[illegible],-2	
48			.264,-2	.172,-2	
49			.341,-2	.155,-2	
50			.[illegible],-2	.175,-2	
51			.[illegible],-2	.220,-2	
52			.2[illegible]1,-2	.220,-2	
53			.2[illegible]0,-2	.170,-2	
54			.1[illegible],-2	.179,-2	
55			.212,-2	.[illegible],-2	
56			.270,-2	.1[illegible],-2	
57			.[illegible],-2	.20[illegible],-2	
58			.350,-2	.2[illegible],-2	
59			.294,-2	.210,-2	
60			.24[illegible],-2	.180,-2	

Run No. 06; u component

N	Anemometer Position Number				
	1	2	3	4	5
00	.164	.147	.897,-1	.153	.205
01	.139	.131	.893,-1	.129	.205
02	.104	.102	.871,-1	.109	.176
03	.774,-1	.818,-1	.740,-1	.793,-1	.158
04	.650,-1	.696,-1	.700,-1	.686,-1	.854,-1
05	.619,-1	.659,-1	.641,-1	.559,-1	.607,-1
06	.517,-1	.508,-1	.410,-1	.490,-1	.520,-1
07	.365,-1	.377,-1	.254,-1	.332,-1	.439,-1
08	.312,-1	.247,-1	.296,-1	.227,-1	.414,-1	
09	.264,-1	.260,-1	.270,-1	.278,-1	.341,-1
10	.210,-1	.194,-1	.240,-1	.220,-1	.437,-1
11	.218,-1	.158,-1	.188,-1	.215,-1	.431,-1
12	.223,-1	.140,-1	.163,-1	.190,-1	.331,-1
13	.162,-1	.154,-1	.154,-1	.171,-1	.279,-1
14	.154,-1	.141,-1	.119,-1	.210,-1	.241,-1
15	.140,-1	.926,-2	.107,-1	.209,-1	.209,-1
16	.147,-1	.949,-2	.106,-1	.167,-1	.243,-1
17	.166,-1	.125,-1	.863,-2	.150,-1	.205,-1
18	.135,-1	.101,-1	.822,-2	.112,-1	.189,-1
19	.115,-1	.772,-2	.821,-2	.102,-1	.167,-1
20	.115,-1	.697,-2	.850,-2	.123,-1	.125,-1
21	.124,-1	.918,-2	.895,-2	.131,-1	.138,-1
22	.141,-1	.109,-1	.760,-2	.127,-1	.170,-1
23	.135,-1	.870,-2	.755,-2	.906,-2	.149,-1
24	.106,-1	.772,-2	.937,-2	.807,-2	.127,-1
25	.993,-2	.936,-2	.811,-2	.757,-2	.140,-1
26	.123,-1	.870,-2	.827,-2	.111,-1	.131,-1
27	.110,-1	.676,-2	.699,-2	.115,-1	.112,-1
28	.816,-2	.535,-2	.888,-2	.774,-2	.963,-2
29	.792,-2	.466,-2	.805,-2	.725,-2	.715,-2
30	.906,-2	.580,-2	.546,-2	.838,-2	.770,-2
31	.119,-1	.662,-2	.610,-2	.848,-2	.980,-2
32	.981,-2	.484,-2	.509,-2	.829,-2	.104,-1
33	.843,-2	.551,-2	.468,-2	.597,-2	.105,-1
34	.979,-2	.800,-2	.478,-2	.825,-2	.922,-2
35	.913,-2	.875,-2	.537,-2	.563,-2	.954,-2
36	.726,-2	.675,-2	.482,-2	.845,-2	.110,-1
37	.581,-2	.576,-2	.418,-2	.541,-2	.100,-1
38	.662,-2	.604,-2	.420,-2	.548,-2	.671,-2
39	.663,-2	.544,-2	.554,-2	.474,-2	.556,-2
40	.579,-2	.465,-2	.444,-2	.356,-2	.727,-2
41	.696,-2	.522,-2	.532,-2	.398,-2	.935,-2
42	.692,-2	.559,-2	.414,-2	.345,-2	.954,-2
43	.617,-2	.462,-2	.425,-2	.352,-2	.927,-2
44	.566,-2	.418,-2	.296,-2	.514,-2	.100,-1
45	.488,-2	.345,-2	.320,-2	.593,-2	.865,-2
46	.581,-2	.258,-2	.378,-2	.469,-2	.707,-2
47	.577,-2	.265,-2	.382,-2	.286,-2	.626,-2
48	.358,-2	.307,-2	.323,-2	.275,-2	.519,-2
49	.314,-2	.302,-2	.323,-2	.246,-2	.522,-2
50	.313,-2	.370,-2	.413,-2	.223,-2	.665,-2
51	.371,-2	.340,-2	.339,-2	.233,-2	.711,-2
52	.441,-2	.309,-2	.371,-2	.378,-2	.867,-2
53	.466,-2	.309,-2	.398,-2	.340,-2	.796,-2
54	.495,-2	.433,-2	.387,-2	.341,-2	.474,-2
55	.481,-2	.346,-2	.346,-2	.315,-2	.501,-2
56	.406,-2	.259,-2	.253,-2	.322,-2	.457,-2
57	.298,-2	.250,-2	.276,-2	.430,-2	.553,-2
58	.314,-2	.270,-2	.332,-2	.433,-2	.475,-2
59	.368,-2	.335,-2	.269,-2	.399,-2	.509,-2
60	.324,-2	.322,-2	.243,-2	.315,-2	.458,-2

Run No. 96; v component

	Anemometer Position Number				
N	1	2	3	4	5
00	.292	.266	.209	.273	.457
01	.227	.218	.148	.215	.356
02	.950,-1	.899,-1	.615,-1	.955,-1	.199
03	.407,-1	.367,-1	.981,-1	.398,-1	.598,-1
04	.317,-1	.258,-1	.191,-1	.276,-1	.405,-1
05	.294,-1	.247,-1	.175,-1	.240,-1	.330,-1
06	.276,-1	.225,-1	.224,-1	.227,-1	.260,-1
07	.175,-1	.198,-1	.156,-1	.144,-1	.170,-1
08	.121,-1	.155,-1	.942,-2	.995,-2	.160,-1
09	.117,-1	.112,-1	.757,-2	.989,-2	.209,-1
10	.115,-1	.895,-2	.728,-2	.844,-2	.267,-1
11	.147,-1	.107,-1	.785,-2	.185,-1	.264,-1
12	.185,-1	.135,-1	.941,-2	.128,-1	.172,-1
13	.165,-1	.145,-1	.898,-2	.169,-1	.134,-1
14	.124,-1	.127,-1	.606,-2	.814,-2	.120,-1
15	.779,-2	.752,-2	.552,-2	.754,-2	.101,-1
16	.745,-2	.711,-2	.782,-2	.879,-2	.105,-1
17	.105,-1	.855,-2	.791,-2	.109,-1	.135,-1
18	.133,-1	.991,-2	.612,-2	.986,-2	.124,-1
19	.133,-1	.955,-2	.558,-2	.668,-2	.115,-1
20	.191,-1	.182,-1	.562,-2	.555,-2	.157,-1
21	.118,-1	.994,-2	.582,-2	.571,-2	.158,-1
22	.106,-1	.945,-2	.459,-2	.597,-2	.184,-1
23	.788,-2	.778,-2	.582,-2	.927,-2	.114,-1
24	.769,-2	.685,-2	.475,-2	.690,-2	.122,-1
25	.851,-2	.629,-2	.496,-2	.739,-2	.988,-2
26	.755,-2	.588,-2	.458,-2	.466,-2	.555,-2
27	.791,-2	.578,-2	.448,-2	.499,-2	.693,-2
28	.772,-2	.660,-2	.599,-2	.551,-2	.581,-2
29	.657,-2	.896,-2	.497,-2	.655,-2	.997,-2
30	.436,-2	.797,-2	.407,-2	.671,-2	.787,-2
31	.609,-2	.649,-2	.592,-2	.549,-2	.189,-1
32	.756,-2	.475,-2	.282,-2	.445,-2	.126,-1
33	.658,-2	.549,-2	.895,-2	.421,-2	.135,-1
34	.461,-2	.521,-2	.359,-2	.468,-2	.137,-1
35	.434,-2	.590,-2	.529,-2	.659,-2	.115,-1
36	.588,-2	.688,-2	.545,-2	.672,-2	.851,-2
37	.572,-2	.577,-2	.451,-2	.547,-2	.899,-2
38	.710,-2	.525,-2	.465,-2	.435,-2	.188,-1
39	.742,-2	.493,-2	.495,-2	.339,-2	.789,-2
40	.518,-2	.561,-2	.411,-2	.412,-2	.568,-2
41	.555,-2	.599,-2	.357,-2	.489,-2	.585,-2
42	.695,-2	.625,-2	.376,-2	.343,-2	.645,-2
43	.597,-2	.587,-2	.416,-2	.328,-2	.657,-2
44	.558,-2	.648,-2	.376,-2	.393,-2	.635,-2
45	.713,-2	.604,-2	.329,-2	.454,-2	.724,-2
46	.689,-2	.548,-2	.381,-2	.339,-2	.668,-2
47	.553,-2	.514,-2	.349,-2	.292,-2	.676,-2
48	.558,-2	.585,-2	.285,-2	.372,-2	.648,-2
49	.516,-2	.530,-2	.441,-2	.400,-2	.496,-2
50	.535,-2	.489,-2	.417,-2	.483,-2	.551,-2
51	.624,-2	.362,-2	.324,-2	.415,-2	.604,-2
52	.565,-2	.489,-2	.255,-2	.312,-2	.598,-2
53	.853,-2	.618,-2	.226,-2	.238,-2	.490,-2
54	.759,-2	.516,-2	.342,-2	.287,-2	.578,-2
55	.584,-2	.525,-2	.449,-2	.895,-2	.787,-2
56	.630,-2	.602,-2	.406,-2	.375,-2	.188,-1
57	.824,-2	.629,-2	.353,-2	.371,-2	.874,-2
58	.681,-2	.667,-2	.393,-2	.386,-2	.490,-2
59	.547,-2	.529,-2	.331,-2	.454,-2	.418,-2
60	.518,-2	.634,-2	.251,-2	.476,-2	.354,-2

Run No. 06; w component

N	Anemometer Position Number 1	2	3	4	5
00	.706,-2	.582,-2	.209,-2	.317,-2	.787,-2
01	.675,-2	.534,-2	.314,-2	.279,-2	.898,-2
02	.675,-2	.487,-2	.408,-2	.200,-2	.790,-2
03	.631,-2	.404,-2	.378,-2	.269,-2	.595,-2
04	.609,-2	.560,-2	.461,-2	.332,-2	.532,-2
05	.749,-2	.672,-2	.572,-2	.293,-2	.551,-2
06	.734,-2	.631,-2	.524,-2	.249,-2	.586,-2
07	.734,-2	.475,-2	.353,-2	.267,-2	.505,-2
08	.616,-2	.524,-2	.267,-2	.342,-2	.402,-2
09	.570,-2	.308,-2	.279,-2	.309,-2	.427,-2
10	.597,-2	.536,-2	.246,-2	.285,-2	.591,-2
11	.719,-2	.523,-2	.277,-2	.294,-2	.564,-2
12	.781,-2	.426,-2	.311,-2	.218,-2	.557,-2
13	.731,-2	.334,-2	.209,-2	.204,-2	.681,-2
14	.595,-2	.496,-2	.230,-2	.252,-2	.600,-2
15	.490,-2	.601,-2	.239,-2	.304,-2	.563,-2
16	.432,-2	.572,-2	.205,-2	.280,-2	.486,-2
17	.474,-2	.473,-2	.209,-2	.245,-2	.509,-2
18	.507,-2	.362,-2	.252,-2	.173,-2	.568,-2
19	.611,-2	.404,-2	.265,-2	.195,-2	.319,-2
20	.759,-2	.537,-2	.240,-2	.287,-2	.505,-2
21	.635,-2	.526,-2	.255,-2	.306,-2	.508,-2
22	.465,-2	.379,-2	.270,-2	.256,-2	.464,-2
23	.382,-2	.319,-2	.268,-2	.292,-2	.395,-2
24	.553,-2	.473,-2	.315,-2	.240,-2	.455,-2
25	.748,-2	.621,-2	.305,-2	.176,-2	.528,-2
26	.651,-2	.644,-2	.243,-2	.209,-2	.500,-2
27	.650,-2	.600,-2	.251,-2	.318,-2	.418,-2
28	.954,-2	.463,-2	.270,-2	.325,-2	.407,-2
29	.921,-2	.438,-2	.295,-2	.234,-2	.496,-2
30	.699,-2	.350,-2	.294,-2	.214,-2	.493,-2
31	.711,-2	.388,-2	.274,-2	.303,-2	.459,-2
32	.922,-2	.475,-2	.234,-2	.354,-2	.523,-2
33	.935,-2	.432,-2	.228,-2	.219,-2	.511,-2
34	.923,-2	.439,-2	.326,-2	.149,-2	.415,-2
35	.823,-2	.482,-2	.371,-2	.169,-2	.436,-2
36	.579,-2	.469,-2	.329,-2	.181,-2	.526,-2
37	.553,-2	.469,-2	.318,-2	.199,-2	.608,-2
38	.725,-2	.528,-2	.292,-2	.262,-2	.576,-2
39	.726,-2	.540,-2	.327,-2	.256,-2	.654,-2
40	.546,-2	.488,-2	.349,-2	.213,-2	.610,-2
41	.502,-2	.414,-2	.322,-2	.199,-2	.430,-2
42	.494,-2	.440,-2	.358,-2	.223,-2	.502,-2
43	.499,-2	.340,-2	.340,-2	.262,-2	.605,-2
44	.564,-2	.417,-2	.285,-2	.242,-2	.631,-2
45	.570,-2	.409,-2	.294,-2	.187,-2	.613,-2
46	.604,-2	.410,-2	.378,-2	.224,-2	.563,-2
47	.527,-2	.530,-2	.387,-2	.258,-2	.521,-2
48	.408,-2	.681,-2	.266,-2	.285,-2	.497,-2
49	.383,-2	.574,-2	.265,-2	.239,-2	.408,-2
50	.423,-2	.447,-2	.262,-2	.173,-2	.319,-2
51	.441,-2	.466,-2	.207,-2	.217,-2	.291,-2
52	.424,-2	.451,-2	.203,-2	.245,-2	.450,-2
53	.527,-2	.402,-2	.205,-2	.221,-2	.559,-2
54	.579,-2	.480,-2	.240,-2	.268,-2	.513,-2
55	.457,-2	.582,-2	.309,-2	.239,-2	.481,-2
56	.446,-2	.559,-2	.284,-2	.195,-2	.500,-2
57	.507,-2	.646,-2	.245,-2	.209,-2	.436,-2
58	.523,-2	.643,-2	.276,-2	.211,-2	.378,-2
59	.583,-2	.576,-2	.219,-2	.204,-2	.384,-2
60	.551,-2	.462,-2	.157,-2	.203,-2	.303,-2

Run No. 071 u component

N	Anemometer Position Number 1	2	3	4	5
00	.307	.351	.356	.325	.300
01	.297	.291	.279	.262	.261
02	.125	.125	.110	.114	.145
03	.592,-1	.548,-1	.425,-1	.425,-1	.608,-1
04	.186,-1	.182,-1	.334,-1	.321,-1	.346,-1
05	.157,-1	.172,-1	.175,-1	.235,-1	.261,-1
06	.149,-1	.194,-1	.912,-2	.250,-1	.170,-1
07	.105,-1	.184,-1	.115,-1	.254,-1	.165,-1
08	.822,-2	.164,-1	.142,-1	.217,-1	.175,-1
09	.717,-2	.107,-1	.123,-1	.179,-1	.116,-1
10	.654,-2	.693,-2	.874,-2	.115,-1	.809,-2
11	.686,-2	.672,-2	.666,-2	.802,-2	.869,-2
12	.600,-2	.762,-2	.536,-2	.666,-2	.826,-2
13	.591,-2	.760,-2	.448,-2	.594,-2	.621,-2
14	.428,-2	.519,-2	.448,-2	.525,-2	.413,-2
15	.259,-2	.467,-2	.401,-2	.430,-2	.349,-2
16	.297,-2	.417,-2	.359,-2	.392,-2	.433,-2
17	.322,-2	.446,-2	.339,-2	.370,-2	.402,-2
18	.385,-2	.329,-2	.260,-2	.341,-2	.447,-2
19	.348,-2	.350,-2	.234,-2	.224,-2	.370,-2
20	.238,-2	.321,-2	.246,-2	.166,-2	.261,-2
21	.245,-2	.251,-2	.321,-2	.265,-2	.334,-2
22	.177,-2	.216,-2	.329,-2	.277,-2	.345,-2
23	.145,-2	.209,-2	.224,-2	.213,-2	.264,-2
24	.101,-2	.187,-2	.214,-2	.206,-2	.250,-2
25	.109,-2	.256,-2	.258,-2	.225,-2	.248,-2
26	.255,-2	.224,-2	.312,-2	.231,-2	.282,-2
27	.272,-2	.185,-2	.268,-2	.224,-2	.250,-2
28	.185,-2	.219,-2	.201,-2	.269,-2	.207,-2
29	.129,-2	.254,-2	.176,-2	.357,-2	.255,-2
30	.124,-2	.245,-2	.152,-2	.246,-2	.260,-2
31	.168,-2	.218,-2	.175,-2	.135,-2	.257,-2
32	.196,-2	.139,-2	.221,-2	.162,-2	.186,-2
33	.198,-2	.158,-2	.227,-2	.198,-2	.119,-2
34	.155,-2	.159,-2	.184,-2	.159,-2	.119,-2
35	.115,-2	.186,-2	.146,-2	.175,-2	.118,-2
36	.127,-2	.198,-2	.152,-2	.206,-2	.120,-2
37	.144,-2	.151,-2	.169,-2	.139,-2	.138,-2
38	.152,-2	.114,-2	.152,-2	.797,-3	.989,-3
39	.137,-2	.108,-2	.109,-2	.701,-3	.873,-3
40	.117,-2	.921,-3	.115,-2	.851,-3	.849,-3
41	.965,-3	.791,-3	.118,-2	.818,-3	.849,-3
42	.872,-3	.818,-3	.118,-2	.748,-3	.109,-2
43	.124,-2	.990,-3	.117,-2	.762,-3	.116,-2
44	.119,-2	.912,-3	.965,-3	.805,-3	.145,-2
45	.854,-3	.100,-2	.718,-3	.488,-3	.139,-2
46	.697,-3	.843,-3	.691,-3	.111,-2	.107,-2
47	.912,-3	.887,-3	.859,-3	.145,-2	.988,-3
48	.117,-2	.108,-2	.917,-3	.124,-2	.105,-2
49	.102,-2	.102,-2	.854,-3	.867,-3	.954,-3
50	.911,-3	.909,-3	.687,-3	.716,-3	.904,-3
51	.125,-2	.112,-2	.996,-3	.750,-3	.870,-3
52	.124,-2	.125,-2	.133,-2	.589,-3	.742,-3
53	.117,-2	.954,-3	.137,-2	.127,-2	.810,-3
54	.124,-2	.656,-3	.137,-2	.144,-2	.921,-3
55	.795,-3	.638,-3	.131,-2	.102,-2	.106,-2
56	.566,-3	.725,-3	.109,-2	.125,-2	.115,-2
57	.789,-3	.685,-3	.954,-3	.141,-2	.138,-2
58	.110,-2	.620,-3	.905,-3	.152,-2	.142,-2
59	.120,-2	.491,-3	.839,-3	.155,-2	.104,-2
60	.953,-3	.422,-3	.688,-3	.100,-2	.701,-3



Run No. 971 v component

	Anemometer Position Number				
N	1	2	3	4	5
00	.396	.405	.402	.409	.368
01	.255	.255	.255	.265	.255
02	.742,-1	.725,-1	.732,-1	.737,-1	.849,-1
03	.294,-1	.216,-1	.294,-1	.523,-1	.429,-1
04	.200,-1	.185,-1	.235,-1	.538,-1	.412,-1
05	.169,-1	.150,-1	.184,-1	.184,-1	.278,-1
06	.135,-1	.120,-1	.151,-1	.949,-2	.149,-1
07	.106,-1	.112,-1	.107,-1	.822,-2	.117,-1
08	.832,-2	.789,-2	.710,-2	.773,-2	.959,-2
09	.785,-2	.729,-2	.518,-2	.717,-2	.899,-2
10	.638,-2	.641,-2	.562,-2	.494,-2	.681,-2
11	.688,-2	.632,-2	.582,-2	.508,-2	.673,-2
12	.741,-2	.662,-2	.560,-2	.518,-2	.643,-2
13	.466,-2	.495,-2	.559,-2	.898,-2	.615,-2
14	.295,-2	.312,-2	.475,-2	.585,-2	.946,-2
15	.317,-2	.288,-2	.411,-2	.402,-2	.413,-2
16	.364,-2	.398,-2	.382,-2	.339,-2	.207,-2
17	.324,-2	.395,-2	.310,-2	.288,-2	.267,-2
18	.255,-2	.255,-2	.270,-2	.299,-2	.285,-2
19	.258,-2	.238,-2	.271,-2	.241,-2	.186,-2
20	.212,-2	.263,-2	.288,-2	.232,-2	.181,-2
21	.223,-2	.297,-2	.286,-2	.283,-2	.175,-2
22	.240,-2	.205,-2	.175,-2	.178,-2	.154,-2
23	.234,-2	.125,-2	.157,-2	.167,-2	.147,-2
24	.173,-2	.115,-2	.206,-2	.111,-2	.107,-2
25	.169,-2	.138,-2	.195,-2	.861,-3	.146,-2
26	.179,-2	.139,-2	.141,-2	.896,-3	.195,-2
27	.150,-2	.133,-2	.156,-2	.138,-2	.169,-2
28	.149,-2	.115,-2	.136,-2	.148,-2	.116,-2
29	.194,-2	.169,-2	.133,-2	.169,-2	.122,-2
30	.201,-2	.991,-3	.958,-3	.109,-2	.143,-2
31	.181,-2	.150,-2	.800,-3	.840,-3	.131,-2
32	.171,-2	.140,-2	.855,-3	.975,-3	.129,-2
33	.170,-2	.130,-2	.102,-2	.101,-2	.114,-2
34	.162,-2	.125,-2	.125,-2	.106,-2	.652,-3
35	.143,-2	.112,-2	.156,-2	.100,-2	.727,-3
36	.147,-2	.134,-2	.119,-2	.878,-3	.942,-3
37	.155,-2	.146,-2	.771,-3	.885,-3	.108,-2
38	.147,-2	.115,-2	.792,-3	.831,-3	.889,-3
39	.150,-2	.104,-2	.862,-3	.859,-3	.101,-2
40	.896,-3	.801,-3	.823,-3	.547,-3	.983,-3
41	.799,-3	.963,-3	.108,-2	.721,-3	.885,-3
42	.775,-3	.124,-2	.984,-3	.654,-3	.839,-3
43	.108,-2	.116,-2	.886,-3	.786,-3	.996,-3
44	.115,-2	.999,-3	.755,-3	.907,-3	.112,-2
45	.118,-2	.108,-2	.857,-3	.775,-3	.136,-2
46	.136,-2	.128,-2	.101,-2	.607,-3	.146,-2
47	.137,-2	.128,-2	.934,-3	.686,-3	.127,-2
48	.107,-2	.106,-2	.772,-3	.680,-3	.156,-2
49	.105,-2	.117,-2	.759,-3	.585,-3	.172,-2
50	.100,-2	.117,-2	.658,-3	.783,-3	.131,-2
51	.115,-2	.109,-2	.694,-3	.751,-3	.125,-2
52	.131,-2	.108,-2	.795,-3	.650,-3	.145,-2
53	.145,-2	.112,-2	.914,-3	.595,-3	.140,-2
54	.130,-2	.100,-2	.102,-2	.716,-3	.120,-2
55	.152,-2	.116,-2	.112,-2	.810,-3	.132,-2
56	.152,-2	.986,-3	.109,-2	.592,-3	.151,-2
57	.111,-2	.789,-3	.975,-3	.567,-3	.128,-2
58	.911,-3	.102,-2	.834,-3	.518,-3	.890,-3
59	.925,-3	.140,-2	.657,-3	.586,-3	.728,-3
60	.774,-3	.124,-2	.467,-3	.270,-3	.638,-3

Run No. 07; w component

N	Anemometer Position Number 1	2	3	4	5
00	.227,-1	.355,-1	.264,-1	.219,-1	.220,-1
01	.272,-1	.327,-1	.272,-1	.343,-1	.276,-1
02	.256,-1	.275,-1	.267,-1	.469,-1	.357,-1
03	.269,-1	.352,-1	.342,-1	.399,-1	.342,-1
04	.306,-1	.318,-1	.361,-1	.319,-1	.304,-1
05	.263,-1	.294,-1	.272,-1	.261,-1	.276,-1
06	.259,-1	.289,-1	.281,-1	.253,-1	.275,-1
07	.270,-1	.225,-1	.297,-1	.270,-1	.248,-1
08	.240,-1	.190,-1	.196,-1	.324,-1	.331,-1
09	.204,-1	.254,-1	.189,-1	.370,-1	.285,-1
10	.233,-1	.269,-1	.208,-1	.327,-1	.246,-1
11	.277,-1	.215,-1	.189,-1	.233,-1	.256,-1
12	.234,-1	.195,-1	.164,-1	.175,-1	.225,-1
13	.205,-1	.200,-1	.195,-1	.156,-1	.205,-1
14	.142,-1	.193,-1	.227,-1	.151,-1	.168,-1
15	.133,-1	.154,-1	.193,-1	.147,-1	.148,-1
16	.158,-1	.152,-1	.204,-1	.150,-1	.161,-1
17	.209,-1	.139,-1	.209,-1	.122,-1	.220,-1
18	.169,-1	.147,-1	.176,-1	.141,-1	.255,-1
19	.134,-1	.170,-1	.178,-1	.161,-1	.210,-1
20	.107,-1	.184,-1	.213,-1	.199,-1	.143,-1
21	.188,-1	.177,-1	.189,-1	.185,-1	.157,-1
22	.145,-1	.158,-1	.185,-1	.149,-1	.141,-1
23	.182,-1	.187,-1	.186,-1	.160,-1	.190,-1
24	.207,-1	.190,-1	.184,-1	.142,-1	.846,-2
25	.197,-1	.118,-1	.197,-1	.199,-1	.126,-1
26	.157,-1	.147,-1	.194,-1	.142,-1	.152,-1
27	.140,-1	.169,-1	.175,-1	.186,-1	.151,-1
28	.152,-1	.168,-1	.138,-1	.780,-2	.164,-1
29	.129,-1	.184,-1	.116,-1	.921,-2	.151,-1
30	.125,-1	.179,-1	.186,-1	.137,-1	.188,-1
31	.179,-1	.168,-1	.976,-2	.123,-1	.152,-1
32	.200,-1	.147,-1	.112,-1	.805,-2	.202,-1
33	.188,-1	.116,-1	.124,-1	.889,-2	.168,-1
34	.165,-1	.112,-1	.128,-1	.121,-1	.129,-1
35	.125,-1	.182,-1	.151,-1	.118,-1	.180,-1
36	.145,-1	.931,-2	.119,-1	.105,-1	.187,-1
37	.129,-1	.142,-1	.133,-1	.189,-1	.125,-1
38	.886,-2	.128,-1	.146,-1	.112,-1	.137,-1
39	.791,-2	.140,-1	.121,-1	.114,-1	.157,-1
40	.898,-2	.115,-1	.891,-2	.125,-1	.128,-1
41	.116,-1	.872,-2	.888,-2	.124,-1	.118,-1
42	.111,-1	.865,-2	.930,-2	.109,-1	.101,-1
43	.102,-1	.146,-1	.132,-1	.965,-2	.911,-2
44	.135,-1	.175,-1	.135,-1	.927,-2	.113,-1
45	.145,-1	.149,-1	.863,-2	.116,-1	.138,-1
46	.135,-1	.120,-1	.811,-2	.115,-1	.129,-1
47	.162,-1	.114,-1	.120,-1	.964,-2	.115,-1
48	.136,-1	.993,-2	.140,-1	.117,-1	.116,-1
49	.934,-2	.110,-1	.112,-1	.127,-1	.110,-1
50	.984,-2	.114,-1	.834,-2	.118,-1	.115,-1
51	.151,-1	.945,-2	.885,-2	.157,-1	.105,-1
52	.154,-1	.811,-2	.109,-1	.173,-1	.980,-2
53	.109,-1	.113,-1	.116,-1	.154,-1	.854,-2
54	.130,-1	.184,-1	.916,-2	.130,-1	.840,-2
55	.166,-1	.162,-1	.111,-1	.130,-1	.930,-2
56	.132,-1	.109,-1	.150,-1	.124,-1	.139,-1
57	.117,-1	.107,-1	.156,-1	.124,-1	.131,-1
58	.137,-1	.147,-1	.163,-1	.140,-1	.122,-1
59	.114,-1	.129,-1	.152,-1	.132,-1	.975,-2
60	.855,-2	.898,-2	.159,-1	.113,-1	.937,-2

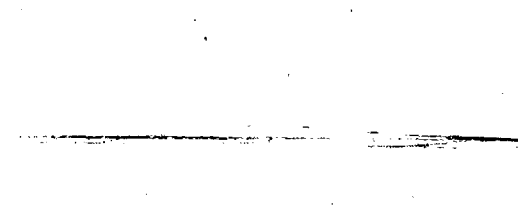

Run No. 06; u component

N	Anemometer Position Number 1	2	3	4	5
00	.322	.304	.299	.307	.259
01	.216	.218	.252	.226	.223
02	.801,-1	.100	.124	.114	.128
03	.491,-1	.599,-1	.560,-1	.536,-1	.658,-1
04	.398,-1	.340,-1	.291,-1	.267,-1	.453,-1
05	.333,-1	.260,-1	.259,-1	.195,-1	.248,-1
06	.241,-1	.181,-1	.225,-1	.157,-1	.233,-1
07	.165,-1	.182,-1	.140,-1	.150,-1	.241,-1
08	.123,-1	.177,-1	.112,-1	.166,-1	.139,-1
09	.101,-1	.121,-1	.111,-1	.157,-1	.994,-2
10	.121,-1	.912,-2	.847,-2	.113,-1	.110,-1
11	.125,-1	.915,-2	.667,-2	.875,-2	.127,-1
12	.986,-2	.709,-2	.973,-2	.842,-2	.100,-1
13	.801,-2	.550,-2	.907,-2	.897,-2	.705,-2
14	.676,-2	.515,-2	.851,-2	.802,-2	.822,-2
15	.415,-2	.518,-2	.740,-2	.606,-2	.757,-2
16	.524,-2	.440,-2	.619,-2	.496,-2	.646,-2
17	.542,-2	.300,-2	.548,-2	.406,-2	.560,-2
18	.508,-2	.495,-2	.400,-2	.412,-2	.499,-2
19	.551,-2	.299,-2	.414,-2	.512,-2	.474,-2
20	.350,-2	.289,-2	.344,-2	.550,-2	.397,-2
21	.244,-2	.365,-2	.425,-2	.435,-2	.410,-2
22	.260,-2	.456,-2	.435,-2	.409,-2	.382,-2
23	.297,-2	.488,-2	.351,-2	.359,-2	.305,-2
24	.379,-2	.390,-2	.270,-2	.291,-2	.315,-2
25	.334,-2	.344,-2	.185,-2	.375,-2	.297,-2
26	.251,-2	.346,-2	.128,-2	.329,-2	.230,-2
27	.204,-2	.242,-2	.191,-2	.270,-2	.250,-2
28	.201,-2	.166,-2	.244,-2	.276,-2	.260,-2
29	.244,-2	.182,-2	.199,-2	.346,-2	.306,-2
30	.245,-2	.216,-2	.215,-2	.223,-2	.355,-2
31	.229,-2	.196,-2	.263,-2	.197,-2	.273,-2
32	.186,-2	.187,-2	.308,-2	.168,-2	.244,-2
33	.191,-2	.260,-2	.349,-2	.157,-2	.276,-2
34	.186,-2	.241,-2	.296,-2	.171,-2	.190,-2
35	.179,-2	.231,-2	.204,-2	.175,-2	.208,-2
36	.164,-2	.282,-2	.218,-2	.158,-2	.274,-2
37	.158,-2	.230,-2	.200,-2	.128,-2	.288,-2
38	.128,-2	.193,-2	.227,-2	.125,-2	.147,-2
39	.147,-2	.168,-2	.185,-2	.166,-2	.240,-2
40	.164,-2	.199,-2	.132,-2	.185,-2	.295,-2
41	.159,-2	.147,-2	.177,-2	.167,-2	.279,-2
42	.164,-2	.121,-2	.200,-2	.131,-2	.379,-2
43	.164,-2	.149,-2	.156,-2	.984,-3	.454,-2
44	.124,-2	.166,-2	.138,-2	.128,-2	.327,-2
45	.108,-2	.102,-2	.132,-2	.140,-2	.170,-2
46	.145,-2	.102,-2	.152,-2	.128,-2	.149,-2
47	.140,-2	.145,-2	.140,-2	.127,-2	.105,-2
48	.124,-2	.106,-2	.101,-2	.148,-2	.252,-2
49	.121,-2	.148,-2	.841,-3	.131,-2	.267,-2
50	.930,-3	.154,-2	.998,-3	.110,-2	.232,-2
51	.113,-2	.109,-2	.112,-2	.117,-2	.201,-2
52	.118,-2	.957,-3	.110,-2	.946,-3	.176,-2
53	.132,-2	.885,-3	.132,-2	.846,-3	.140,-2
54	.138,-2	.964,-3	.135,-2	.926,-3	.111,-2
55	.111,-2	.100,-2	.128,-2	.114,-2	.124,-2
56	.814,-3	.116,-2	.138,-2	.122,-2	.108,-2
57	.912,-3	.119,-2	.113,-2	.109,-2	.949,-3
58	.139,-2	.120,-2	.901,-3	.116,-2	.135,-2
59	.136,-2	.115,-2	.825,-3	.110,-2	.157,-2
60	.972,-3	.950,-3	.877,-3	.833,-3	.134,-2

Run No. 88; v component

	Anemometer Position Number				
N	1	2	3	4	5
00	.415	.481	.419	.436	.411
01	.240	.240	.259	.251	.271
02	.595,-1	.608,-1	.691,-1	.599,-1	.795,-1
03	.289,-1	.290,-1	.184,-1	.214,-1	.259,-1
04	.175,-1	.217,-1	.156,-1	.119,-1	.176,-1
05	.150,-1	.146,-1	.141,-1	.819,-2	.117,-1
06	.990,-2	.937,-2	.110,-1	.758,-2	.107,-1
07	.644,-2	.677,-2	.778,-2	.659,-2	.115,-1
08	.499,-2	.564,-2	.589,-2	.469,-2	.997,-2
09	.477,-2	.586,-2	.554,-2	.497,-2	.788,-2
10	.428,-2	.616,-2	.422,-2	.489,-2	.414,-2
11	.385,-2	.352,-2	.505,-2	.437,-2	.318,-2
12	.348,-2	.420,-2	.501,-2	.349,-2	.279,-2
13	.368,-2	.395,-2	.405,-2	.389,-2	.219,-2
14	.338,-2	.347,-2	.350,-2	.497,-2	.161,-2
15	.429,-2	.275,-2	.270,-2	.168,-2	.196,-2
16	.499,-2	.266,-2	.250,-2	.185,-2	.245,-2
17	.466,-2	.588,-2	.185,-2	.155,-2	.216,-2
18	.319,-2	.586,-2	.285,-2	.152,-2	.284,-2
19	.188,-2	.585,-2	.265,-2	.191,-2	.213,-2
20	.257,-2	.285,-2	.260,-2	.234,-2	.240,-2
21	.298,-2	.284,-2	.299,-2	.234,-2	.210,-2
22	.185,-2	.156,-2	.311,-2	.215,-2	.165,-2
23	.168,-2	.195,-2	.289,-2	.198,-2	.154,-2
24	.278,-2	.249,-2	.149,-2	.164,-2	.164,-2
25	.289,-2	.274,-2	.149,-2	.149,-2	.178,-2
26	.288,-2	.287,-2	.185,-2	.155,-2	.188,-2
27	.159,-2	.255,-2	.288,-2	.151,-2	.188,-2
28	.112,-2	.169,-2	.181,-2	.119,-2	.177,-2
29	.143,-2	.186,-2	.155,-2	.184,-2	.191,-2
30	.169,-2	.281,-2	.889,-3	.119,-2	.188,-2
31	.138,-2	.195,-2	.118,-2	.887,-3	.147,-2
32	.975,-3	.151,-2	.149,-2	.978,-3	.151,-2
33	.995,-3	.140,-2	.169,-2	.155,-2	.116,-2
34	.121,-2	.151,-2	.151,-2	.144,-2	.143,-2
35	.181,-2	.198,-2	.182,-2	.189,-2	.169,-2
36	.185,-2	.281,-2	.155,-2	.898,-3	.188,-2
37	.168,-2	.155,-2	.145,-2	.181,-2	.285,-2
38	.158,-2	.158,-2	.148,-2	.181,-2	.185,-2
39	.189,-2	.118,-2	.148,-2	.916,-3	.168,-2
40	.154,-2	.187,-2	.148,-2	.917,-3	.138,-2
41	.145,-2	.184,-2	.151,-2	.118,-2	.885,-3
42	.189,-2	.189,-2	.145,-2	.985,-3	.664,-3
43	.141,-2	.153,-2	.178,-2	.985,-3	.188,-2
44	.157,-2	.155,-2	.115,-2	.878,-3	.157,-2
45	.158,-2	.185,-2	.979,-3	.978,-3	.148,-2
46	.158,-2	.184,-2	.188,-2	.158,-2	.181,-2
47	.116,-2	.115,-2	.147,-2	.118,-2	.174,-2
48	.138,-2	.158,-2	.185,-2	.818,-3	.158,-2
49	.155,-2	.178,-2	.156,-2	.861,-3	.189,-2
50	.285,-2	.151,-2	.974,-3	.988,-3	.118,-2
51	.228,-2	.111,-2	.181,-2	.693,-3	.119,-2
52	.282,-2	.151,-2	.813,-3	.688,-3	.899,-3
53	.179,-2	.181,-2	.825,-3	.998,-3	.786,-3
54	.124,-2	.161,-2	.121,-2	.145,-2	.997,-3
55	.181,-2	.122,-2	.125,-2	.136,-2	.144,-2
56	.188,-2	.135,-2	.986,-3	.819,-3	.153,-2
57	.111,-2	.149,-2	.784,-3	.681,-3	.185,-2
58	.128,-2	.158,-2	.181,-2	.658,-3	.142,-2
59	.158,-2	.115,-2	.889,-3	.675,-3	.158,-2
60	.114,-2	.952,-3	.641,-3	.578,-3	.141,-2



Run No. 08; w component

N	Anemometer Position Number 1	2	3	4	5
00	.257,-1	.154,-1	.318,-1	.341,-1	.259,-1
01	.227,-1	.192,-1	.413,-1	.424,-1	.342,-1
02	.300,-1	.346,-1	.388,-1	.433,-1	.397,-1
03	.842,-1	.446,-1	.[illegible],-1	.[illegible],-1	.[illegible],-1
04	.217,-1	.248,-1	.200,-1	.[illegible],-1	.[illegible],-1
05	.193,-1	.847,-1	.[illegible],-1	.[illegible],-1	.[illegible],-1
[illegible]	.108,-1	.171,-1	.144,-1	.397,-1	.[illegible],-1
07	.225,-1	.256,-1	.[illegible],-1	.[illegible],-1	.[illegible],-1
08	.245,-1	.237,-1	.[illegible],-1	.[illegible],-1	.[illegible],-1
[illegible]	.210,-1	.134,-1	.101,-1	.107,-1	.[illegible],-1
10	.165,-1	.122,-1	.108,-1	.177,-1	.[illegible],-1
[illegible]	.175,-1	.155,-1	.[illegible],-1	.204,-1	.150,-1
12	.137,-1	.179,-1	.23[illegible],-1	.[illegible],-1	.185,-1
13	.134,-1	.151,-1	.202,-1	.[illegible],-1	.241,-1
14	.150,-1	.150,-1	.18[illegible],-1	.198,-1	.201,-1
15	.21[illegible],-1	.175,-1	.185,-1	.172,-1	.240,-1
16	.204,-1	.174,-1	.189,-1	.161,-1	.158,-1
17	.[illegible],-1	.[illegible],-1	.159,-1	.152,-1	.154,-1
18	.[illegible],-1	.[illegible],-1	.147,-1	.159,-1	.169,-1
19	.[illegible],-1	.[illegible],-1	.[illegible],-1	.147,-1	.143,-1
[illegible]	.111,-1	.[illegible],-1	.[illegible],-1	.[illegible],-1	.[illegible],-1
[illegible]	.[illegible],-1	.[illegible],-1	.147,-1	.[illegible],-1	.[illegible],-1
22	.11[illegible],-1	.[illegible],-1	.[illegible],-1	.[illegible],-1	.[illegible],-1
23	.[illegible],-1	.[illegible],-1	.[illegible],-1	.[illegible],-1	.[illegible],-1
24	.[illegible],-1	.[illegible],-1	.[illegible],-1	.[illegible],-1	.[illegible],-1
25	.119,-1	.[illegible],-1	.[illegible],-1	.[illegible],-1	.[illegible],-1
26	.[illegible],-1	.[illegible],-1	.[illegible],-1	.[illegible],-1	.[illegible],-1
27	.[illegible],-1	.[illegible],-1	.[illegible],-1	.[illegible],-1	.[illegible],-1
28	.[illegible],-1	.[illegible],-1	.[illegible],-1	.[illegible],-1	.[illegible],-1
29	.[illegible],-1	.[illegible],-1	.[illegible],-1	.[illegible],-1	.[illegible],-1
30	.[illegible],-1	.[illegible],-1	.[illegible],-1	.[illegible],-1	.[illegible],-1
31	.[illegible],-1	.[illegible],-1	.[illegible],-1	.[illegible],-1	.[illegible],-1
32	.[illegible],-1	.[illegible],-1	.[illegible],-1	.[illegible],-1	.[illegible],-1
33	.[illegible],-1	.[illegible],-1	.[illegible],-1	.[illegible],-1	.[illegible],-1
34	.[illegible],-1	.[illegible],-1	.[illegible],-1	.[illegible],-1	.[illegible],-1
35	.[illegible],-1	.[illegible],-1	.[illegible],-1	.[illegible],-1	.[illegible],-1
36	.[illegible],-1	.[illegible],-1	.[illegible],-1	.[illegible],-1	.[illegible],-1
37	.[illegible],-1	.[illegible],-1	.[illegible],-1	.[illegible],-1	.[illegible],-1
38	.[illegible],-1	.[illegible],-1	.[illegible],-1	.[illegible],-1	.[illegible],-1
39	.[illegible],-1	.[illegible],-1	.[illegible],-1	.[illegible],-1	.[illegible],-1
40	.[illegible],-1	.[illegible],-1	.[illegible],-1	.[illegible],-1	.[illegible],-1
41	.[illegible],-1	.[illegible],-1	.[illegible],-2	.[illegible],-1	.[illegible],-1
42	.[illegible],-1	.[illegible],-1	.[illegible],-2	.[illegible],-1	.[illegible],-1
43	.[illegible],-1	.[illegible],-1	.[illegible],-2	.[illegible],-1	.[illegible],-1
44	.[illegible],-1	.[illegible],-1	.[illegible],-1	.[illegible],-1	.[illegible],-1
45	.[illegible],-1	.[illegible],-1	.[illegible],-1	.[illegible],-1	.[illegible],-1
46	.[illegible],-1	.[illegible],-1	.[illegible],-1	.[illegible],-1	.[illegible],-1
47	.[illegible],-1	.[illegible],-1	.[illegible],-1	.[illegible],-1	.[illegible],-1
48	.[illegible],-1	.[illegible],-1	.[illegible],-1	.[illegible],-1	.[illegible],-1
49	.[illegible],-2	.[illegible],-1	.[illegible],-2	.[illegible],-2	.[illegible],-1
50	.[illegible],-1	.[illegible],-1	.[illegible],-1	.[illegible],-2	.[illegible],-1
51	.[illegible],-1	.957,-2	.[illegible],-1	.[illegible],-1	.[illegible],-1
52	.[illegible],-1	.[illegible],-1	.[illegible],-1	.[illegible],-1	.[illegible],-1
53	.[illegible],-1	.[illegible],-1	.[illegible],-1	.851,-2	.[illegible],-1
54	.758,-2	.[illegible],-1	.[illegible],-1	.[illegible],-1	.[illegible],-2
55	.[illegible],-2	.[illegible],-1	.[illegible],-1	.[illegible],-1	.[illegible],-1
56	.[illegible],-2	.[illegible],-1	.[illegible],-1	.[illegible],-1	.[illegible],-1
57	.[illegible],-2	.[illegible],-1	.[illegible],-1	.[illegible],-2	.[illegible],-2
58	.[illegible],-1	.[illegible],-1	.[illegible],-1	.[illegible],-1	.[illegible],-1
59	.[illegible],-1	.[illegible],-1	.[illegible],-1	.[illegible],-2	.[illegible],-2
60	.[illegible],-1	.[illegible],-2	.[illegible],-2	.[illegible],-2	.[illegible],-2

Run No. 9; u component

N	Anemometer Position Number 1	2	3	4	5
00			.142		
01			.169		
02			.149		
03			.848,-1		
04			.529,-1		
05			.449,-1		
06			.342,-1		
07			.300,-1		
08			.271,-1		
09			.241,-1		
10			.238,-1		
11			.252,-1		
12			.252,-1		
13			.170,-1		
14			.116,-1		
15			.119,-1		
16			.114,-1		
17			.108,-1		
18			.109,-1		
19			.114,-1		
20			.116,-1		
21			.116,-1		
22			.956,-2		
23			.744,-2		
24			.843,-2		
25			.120,-1		
26			.126,-1		
27			.712,-2		
28			.566,-2		
29			.711,-2		
30			.720,-2		
31			.669,-2		
32			.516,-2		
33			.401,-2		
34			.466,-2		
35			.526,-2		
36			.533,-2		
37			.566,-2		
38			.474,-2		
39			.401,-2		
40			.401,-2		
41			.429,-2		
42			.356,-2		
43			.278,-2		
44			.315,-2		
45			.327,-2		
46			.339,-2		
47			.367,-2		
48			.315,-2		
49			.315,-2		
50			.286,-2		
51			.182,-2		
52			.149,-2		
53			.169,-2		
54			.191,-2		
55			.303,-2		
56			.253,-2		
57			.245,-2		
58			.192,-2		
59			.204,-2		
60			.189,-2		

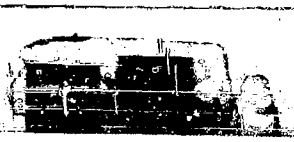

Run No. 9; v component

N	Anemometer Position Number 1	2	3	4	5
00			.462		
01			.408		
02			.126		
03			.521,-1		
04			.209,-1		
05			.140,-1		
06			.119,-1		
07			.106,-1		
08			.104,-1		
09			.110,-1		
10			.106,-1		
11			.102,-1		
12			.098,-1		
13			.102,-1		
14			.012,-2		
15			.607,-2		
16			.443,-2		
17			.494,-2		
18			.655,-2		
19			.720,-2		
20			.699,-2		
21			.601,-2		
22			.640,-2		
23			.651,-2		
24			.601,-2		
25			.487,-2		
26			.498,-2		
27			.359,-2		
28			.249,-2		
29			.259,-2		
30			.357,-2		
31			.440,-2		
32			.492,-2		
33			.497,-2		
34			.479,-2		
35			.425,-2		
36			.326,-2		
37			.329,-2		
38			.320,-2		
39			.352,-2		
40			.414,-2		
41			.427,-2		
42			.404,-2		
43			.377,-2		
44			.340,-2		
45			.308,-2		
46			.347,-2		
47			.323,-2		
48			.304,-2		
49			.302,-2		
50			.420,-2		
51			.351,-2		
52			.325,-2		
53			.266,-2		
54			.225,-2		
55			.452,-2		
56			.418,-2		
57			.304,-2		
58			.295,-2		
59			.188,-2		
60			.132,-2		

Run No. 91 w component

M	Anemometer Position Number 1	2	3	4	5
00			.376,-2		
01			.594,-2		
02			.656,-2		
03			.442,-2		
04			.386,-2		
05			.456,-2		
06			.379,-2		
07			.300,-2		
08			.307,-2		
09			.300,-2		
10			.310,-2		
11			.320,-2		
12			.485,-2		
13			.435,-2		
14			.387,-2		
15			.420,-2		
16			.334,-2		
17			.287,-2		
18			.387,-2		
19			.353,-2		
20			.333,-2		
21			.241,-2		
22			.253,-2		
23			.315,-2		
24			.456,-2		
25			.495,-2		
26			.393,-2		
27			.338,-2		
28			.310,-2		
29			.261,-2		
30			.270,-2		
31			.326,-2		
32			.389,-2		
33			.339,-2		
34			.295,-2		
35			.341,-2		
36			.350,-2		
37			.267,-2		
38			.201,-2		
39			.162,-2		
40			.187,-2		
41			.208,-2		
42			.234,-2		
43			.299,-2		
44			.321,-2		
45			.324,-2		
46			.311,-2		
47			.280,-2		
48			.278,-2		
49			.254,-2		
50			.230,-2		
51			.216,-2		
52			.256,-2		
53			.252,-2		
54			.245,-2		
55			.271,-2		
56			.315,-2		
57			.366,-2		
58			.290,-2		
59			.201,-2		
60			.168,-2		

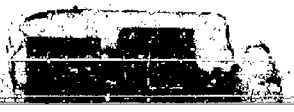

Run No. 10; u component

	Anemometer Position Number				
N	1	2	3	4	5
00	.176,+1	.105,+1	.480	.140,+1	.826
01	.133,+1	.844	.377	.111,+1	.752
02	.516	.552	.141	.435	.533
03	.144	.953,-1	.366,-1	.126	.109
04	.106	.724,-1	.317,-1	.889,-1	.827,-1
05	.114	.654,-1	.302,-1	.596,-1	.567,-1
06	.741,-1	.550,-1	.215,-1	.445,-1	.343,-1
07	.506,-1	.266,-1	.157,-1	.387,-1	.385,-1
08	.473,-1	.351,-1	.144,-1	.488,-1	.392,-1
09	.397,-1	.309,-1	.111,-1	.405,-1	.364,-1
10	.334,-1	.231,-1	.709,-2	.336,-1	.288,-1
11	.374,-1	.157,-1	.690,-2	.209,-1	.206,-1
12	.263,-1	.152,-1	.750,-2	.233,-1	.108,-1
13	.249,-1	.152,-1	.801,-2	.227,-1	.893,-2
14	.209,-1	.112,-1	.652,-2	.145,-1	.134,-1
15	.205,-1	.101,-1	.520,-2	.146,-1	.179,-1
16	.203,-1	.109,-1	.526,-2	.116,-1	.158,-1
17	.134,-1	.994,-2	.699,-2	.852,-2	.129,-1
18	.141,-1	.971,-2	.550,-2	.767,-2	.105,-1
19	.801,-1	.959,-2	.374,-2	.720,-2	.104,-1
20	.191,-1	.886,-2	.249,-2	.597,-2	.991,-2
21	.114,-1	.742,-2	.268,-2	.531,-2	.829,-2
22	.899,-2	.759,-2	.306,-2	.635,-2	.545,-2
23	.102,-1	.558,-2	.463,-2	.905,-2	.674,-2
24	.104,-1	.900,-2	.454,-2	.713,-2	.705,-2
25	.891,-2	.394,-2	.396,-2	.443,-2	.604,-2
26	.889,-2	.316,-2	.357,-2	.508,-2	.519,-2
27	.887,-2	.464,-2	.865,-2	.670,-2	.578,-2
28	.700,-2	.485,-2	.809,-2	.518,-2	.617,-2
29	.758,-2	.694,-2	.917,-2	.595,-2	.452,-2
30	.108,-1	.654,-2	.829,-2	.362,-2	.291,-2
31	.944,-2	.398,-2	.252,-2	.337,-2	.331,-2
32	.704,-2	.344,-2	.211,-2	.265,-2	.489,-2
33	.693,-2	.325,-2	.166,-2	.269,-2	.514,-2
34	.805,-2	.364,-2	.196,-2	.303,-2	.389,-2
35	.803,-2	.355,-2	.168,-2	.311,-2	.367,-2
36	.671,-2	.272,-2	.192,-2	.257,-2	.409,-2
37	.564,-2	.250,-2	.153,-2	.247,-2	.399,-2
38	.550,-2	.272,-2	.143,-2	.230,-2	.358,-2
39	.555,-2	.307,-2	.135,-2	.224,-2	.265,-2
40	.618,-2	.305,-2	.112,-2	.235,-2	.249,-2
41	.458,-2	.290,-2	.108,-2	.310,-2	.241,-2
42	.426,-2	.219,-2	.124,-2	.293,-2	.280,-2
43	.424,-2	.227,-2	.157,-2	.455,-2	.304,-2
44	.408,-2	.238,-2	.172,-2	.311,-2	.286,-2
45	.378,-2	.220,-2	.160,-2	.221,-2	.162,-2
46	.405,-2	.270,-2	.126,-2	.282,-2	.194,-2
47	.370,-2	.322,-2	.103,-2	.327,-2	.221,-2
48	.393,-2	.285,-2	.109,-2	.263,-2	.245,-2
49	.349,-2	.265,-2	.101,-2	.219,-2	.274,-2
50	.241,-2	.257,-2	.910,-3	.186,-2	.250,-2
51	.349,-2	.265,-2	.115,-2	.206,-2	.248,-2
52	.318,-2	.256,-2	.135,-2	.261,-2	.210,-2
53	.251,-2	.212,-2	.167,-2	.310,-2	.169,-2
54	.384,-2	.190,-2	.178,-2	.269,-2	.209,-2
55	.484,-2	.214,-2	.182,-2	.270,-2	.284,-2
56	.366,-2	.196,-2	.134,-2	.290,-2	.385,-2
57	.381,-2	.184,-2	.749,-3	.245,-2	.268,-2
58	.376,-2	.250,-2	.714,-3	.226,-2	.166,-2
59	.313,-2	.228,-2	.109,-2	.196,-2	.136,-2
60	.253,-2	.152,-2	.109,-2	.178,-2	.134,-2

Run No. 10; V component

N	Anemometer Position Number				
	1	2	3	4	5
00	.109,+1	.[illegible]60	.295	.778	.964
01	.792	.4[illegible]	.218	.599	.697
02	.515	.1[illegible]	.101	.259	.254
03	.144	.875,-1	.[illegible]30,-1	.152	.108
04	.112	.[illegible]27,-1	.[illegible]05,-1	.112	.694,-1
05	.[illegible]48,-1	.450,-1	.221,-1	.[illegible]21,-1	.348,-1
06	.356,-1	.[illegible]12,-1	.182,-1	.422,-1	.228,-1
07	.2[illegible],-1	.[illegible]95,-1	.155,-1	.[illegible]04,-1	.215,-1
08	.259,-1	.[illegible]20,-1	.111,-1	.207,-1	.152,-1
09	.[illegible]07,-1	.[illegible]04,-1	.[illegible]31,-2	.1[illegible],-1	.117,-1
10	.17[illegible],-1	.[illegible]01,-1	.1[illegible]3,-1	.151,-1	.[illegible]5,-2
11	.1[illegible],-1	.1[illegible]2,-1	.6[illegible],-2	.118,-1	.[illegible],-2
12	.172,-1	.1[illegible]3,-1	.[illegible]05,-2	.1[illegible],-1	.[illegible],-2
13	.133,-1	.1[illegible]4,-1	.811,-2	.[illegible]55,-1	.[illegible],-2
14	.[illegible]71,-2	.131,-1	.[illegible]04,-2	.[illegible]18,-2	.[illegible],-2
15	.108,-1	.[illegible]47,-2	.[illegible]57,-2	.[illegible]46,-2	.[illegible]3,-2
16	.152,-1	.[illegible]93,-2	.[illegible]98,-2	.[illegible]34,-2	.[illegible],-2
17	.114,-1	.[illegible]01,-2	.[illegible]82,-2	.[illegible],-2	.[illegible],-2
18	.[illegible]77,-2	.[illegible]71,-2	.[illegible]2[illegible],-2	.[illegible]17,-2	.[illegible],-2
19	.101,-1	.[illegible]14,-2	.[illegible]58,-2	.[illegible],-2	.[illegible],-2
20	.149,-1	.[illegible]03,-2	.[illegible]43,-2	.[illegible],-2	.[illegible],-2
21	.13[illegible],-1	.[illegible]48,-2	.[illegible]59,-2	.[illegible],-2	.[illegible],-2
22	.[illegible]28,-2	.[illegible]89,-2	.[illegible]54,-2	.[illegible]71,-2	.[illegible],-2
23	.[illegible]09,-2	.[illegible]20,-2	.[illegible]45,-2	.[illegible]51,-2	.[illegible],-2
24	.[illegible]57,-2	.[illegible]1[illegible],-2	.255,-2	.[illegible]94,-2	.[illegible],-2
25	.453,-2	.[illegible]81,-2	.[illegible]30,-2	.[illegible],-2	.[illegible],-2
26	.[illegible]80,-2	.[illegible]03,-2	.[illegible]99,-2	.[illegible]01,-2	.414,-2
27	.[illegible]43,-2	.[illegible]15,-2	.[illegible],-2	.291,-2	.[illegible],-2
28	.[illegible]74,-2	.[illegible]40,-2	.[illegible]4[illegible],-2	.270,-2	.202,-2
29	.[illegible]23,-2	.240,-2	.[illegible]50,-2	.290,-2	.425,-2
30	.[illegible]31,-2	.[illegible]54,-2	.[illegible]45,-2	.[illegible],-2	.[illegible],-2
31	.[illegible]03,-2	.[illegible]4[illegible],-2	.[illegible]23,-2	.[illegible],-2	.[illegible],-2
32	.711,-2	.[illegible]79,-2	.[illegible]48,-2	.[illegible],-2	.[illegible],-2
33	.[illegible]70,-2	.[illegible]45,-2	.[illegible]74,-2	.[illegible]07,-2	.[illegible],-2
34	.[illegible]08,-2	.[illegible]50,-2	.[illegible]52,-2	.[illegible]41,-2	.[illegible],-2
35	.[illegible]41,-2	.[illegible]27,-2	.[illegible]1[illegible],-2	.[illegible],-2	.[illegible],-2
36	.[illegible]40,-2	.[illegible]98,-2	.[illegible]37,-2	.[illegible],-2	.[illegible],-2
37	.[illegible]4[illegible],-2	.[illegible]10,-2	.[illegible]50,-2	.[illegible],-2	.[illegible],-2
38	.[illegible]54,-2	.[illegible]78,-2	.[illegible]46,-2	.[illegible],-2	.[illegible],-2
39	.[illegible]95,-2	.[illegible],-2	.[illegible]24,-2	.[illegible],-2	.[illegible],-2
40	.[illegible]40,-2	.[illegible]35,-2	.[illegible]1[illegible],-2	.[illegible],-2	.[illegible],-2
41	.[illegible]09,-2	.[illegible]80,-2	.[illegible]29,-2	.[illegible],-2	.[illegible],-2
42	.[illegible]27,-2	.[illegible]2[illegible],-2	.[illegible]35,-2	.[illegible],-2	.[illegible],-2
43	.[illegible]12,-2	.[illegible]44,-2	.[illegible]40,-2	.[illegible],-2	.[illegible],-2
44	.[illegible]41,-2	.[illegible]41,-2	.[illegible]30,-2	.[illegible],-2	.[illegible],-2
45	.[illegible]55,-2	.[illegible]4[illegible],-2	.[illegible]11,-2	.[illegible],-2	.[illegible],-2
46	.[illegible]44,-2	.[illegible],-2	.[illegible]28,-2	.[illegible],-2	.[illegible],-2
47	.[illegible]44,-2	.[illegible]15,-2	.[illegible]22,-2	.[illegible],-2	.[illegible],-2
48	.[illegible]59,-2	.[illegible]57,-2	.[illegible]15,-2	.[illegible],-2	.[illegible],-2
49	.553,-2	.[illegible]12,-2	.[illegible]26,-2	.[illegible],-2	.[illegible],-2
50	.[illegible]81,-2	.[illegible]03,-2	.[illegible]43,-2	.[illegible],-2	.[illegible],-2
51	.[illegible]02,-2	.[illegible],-2	.[illegible]43,-2	.[illegible],-2	.[illegible],-2
52	.[illegible]24,-2	.[illegible]45,-2	.[illegible]39,-2	.[illegible],-2	.[illegible],-2
53	.[illegible]30,-2	.[illegible]51,-2	.[illegible]33,-3	.[illegible],-2	.[illegible],-2
54	.[illegible],-2	.[illegible],-2	.[illegible]51,-3	.[illegible],-2	.[illegible],-2
55	.[illegible]01,-2	.[illegible]03,-2	.[illegible]04,-2	.[illegible],-2	.[illegible],-2
56	.527,-2	.[illegible]59,-2	.[illegible]0[illegible],-2	.[illegible],-2	.[illegible],-2
57	.[illegible]74,-2	.[illegible]41,-2	.[illegible]18,-2	.[illegible],-2	.[illegible],-2
58	.[illegible]7,-2	.[illegible]28,-2	.[illegible]22,-2	.[illegible],-2	.[illegible],-2
59	.[illegible]28,-2	.[illegible]84,-2	.[illegible]89,-3	.[illegible],-2	.[illegible],-2
60	.[illegible]87,-2	.[illegible]01,-2	.[illegible]04,-3	.[illegible],-2	.[illegible],-2

Run No. 101 w component

N	Anemometer Position Number 1	2	3	4	5
00	.753,-2	.7[illegible],-2	.157,-2	.351,-2	.101,-2
01	.[illegible],-2	.[illegible],-2	.205,-2	.418,-2	.272,-2
02	.[illegible],-2	.[illegible],-2	.[illegible],-2	.398,-2	.429,-2
03	.[illegible],-2	.784,-2	.296,-2	.349,-2	.[illegible],-2
04	.100,-1	.[illegible],-2	.231,-2	.[illegible],-2	.[illegible],-2
05	.104,-1	.[illegible],-2	.280,-2	.451,-2	.431,-2
06	.[illegible],-2	.[illegible],-2	.272,-2	.307,-2	.[illegible],-2
07	.814,-2	.498,-2	.170,-2	.[illegible],-2	.[illegible],-2
08	.[illegible],-2	.391,-2	.181,-2	.[illegible],-2	.[illegible],-2
09	.[illegible],-2	.437,-2	.[illegible],-2	.[illegible],-2	.[illegible],-2
10	.[illegible],-2	.[illegible],-2	.[illegible],-2	.[illegible],-2	.[illegible],-2
11	.[illegible],-2	.[illegible],-2	.[illegible],-2	.[illegible],-2	.[illegible],-2
12	.[illegible],-2	.397,-2	.[illegible],-2	.[illegible],-2	.[illegible],-2
13	.[illegible],-2	.472,-2	.[illegible],-2	.[illegible],-2	.[illegible],-2
14	.[illegible],-2	.453,-2	.[illegible],-2	.[illegible],-2	.[illegible],-2
15	.[illegible],-2	.[illegible],-2	.[illegible],-2	.[illegible],-2	.[illegible],-2
16	.[illegible],-2	.[illegible],-2	.[illegible],-2	.[illegible],-2	.[illegible],-2
17	.[illegible],-2	.[illegible],-2	.[illegible],-2	.[illegible],-2	.[illegible],-2
18	.[illegible],-2	.[illegible],-2	.[illegible],-2	.[illegible],-2	.[illegible],-2
19	.[illegible],-2	.[illegible],-2	.[illegible],-2	.[illegible],-2	.[illegible],-2
20	.[illegible],-2	.[illegible],-2	.[illegible],-2	.[illegible],-2	.[illegible],-2
21	.[illegible],-2	.203,-2	.[illegible],-2	.[illegible],-2	.[illegible],-2
22	.455,-2	.175,-2	.[illegible],-2	.[illegible],-2	.[illegible],-2
23	.377,-2	.160,-2	.[illegible],-3	.[illegible],-2	.[illegible],-2
24	.407,-2	.239,-2	.[illegible],-2	.[illegible],-2	.[illegible],-2
25	.397,-2	.292,-2	.[illegible],-2	.[illegible],-2	.[illegible],-2
26	.353,-2	.[illegible],-2	.[illegible],-2	.[illegible],-2	.[illegible],-2
27	.337,-2	.[illegible],-2	.[illegible],-2	.[illegible],-2	.[illegible],-2
28	.383,-2	.[illegible],-2	.[illegible],-2	.[illegible],-2	.[illegible],-2
29	.484,-2	.[illegible],-2	.[illegible],-2	.[illegible],-2	.[illegible],-2
30	.[illegible],-2	.[illegible],-2	.[illegible],-2	.[illegible],-2	.[illegible],-2
31	.457,-2	.[illegible],-2	.[illegible],-2	.[illegible],-2	.[illegible],-2
32	.414,-2	.333,-2	.[illegible],-2	.[illegible],-2	.[illegible],-2
33	.368,-2	.336,-2	.[illegible],-2	.[illegible],-2	.[illegible],-2
34	.395,-2	.303,-2	.[illegible],-2	.[illegible],-2	.[illegible],-2
35	.351,-2	.285,-2	.189,-2	.[illegible],-2	.[illegible],-2
36	.287,-2	.236,-2	.175,-2	.[illegible],-2	.[illegible],-2
37	.329,-2	.277,-2	.146,-2	.[illegible],-2	.[illegible],-2
38	.320,-2	.331,-2	.159,-2	.[illegible],-2	.[illegible],-2
39	.492,-2	.280,-2	.157,-2	.[illegible],-2	.[illegible],-2
40	.566,-2	.257,-2	.[illegible],-2	.[illegible],-2	.[illegible],-2
41	.501,-2	.227,-2	.[illegible],-2	.[illegible],-2	.[illegible],-2
42	.524,-2	.181,-2	.[illegible],-2	.[illegible],-2	.[illegible],-2
43	.483,-2	.[illegible],-2	.[illegible],-2	.[illegible],-2	.[illegible],-2
44	.374,-2	.[illegible],-2	.[illegible],-2	.[illegible],-2	.[illegible],-2
45	.[illegible],-2	.[illegible],-2	.[illegible],-2	.[illegible],-2	.[illegible],-2
46	.[illegible],-2	.[illegible],-2	.[illegible],-2	.[illegible],-2	.[illegible],-2
47	.[illegible],-2	.[illegible],-2	.[illegible],-2	.[illegible],-2	.[illegible],-2
48	.[illegible],-2	.[illegible],-2	.[illegible],-2	.[illegible],-2	.[illegible],-2
49	.[illegible],-2	.215,-2	.[illegible],-2	.[illegible],-2	.[illegible],-2
50	.[illegible],-2	.[illegible],-2	.[illegible],-2	.[illegible],-2	.[illegible],-2
51	.[illegible],-2	.[illegible],-2	.[illegible],-2	.[illegible],-2	.[illegible],-2
52	.[illegible],-2	.[illegible],-2	.[illegible],-2	.[illegible],-2	.[illegible],-2
53	.[illegible],-2	.[illegible],-2	.[illegible],-2	.[illegible],-2	.[illegible],-2
54	.[illegible],-2	.[illegible],-2	.[illegible],-2	.[illegible],-2	.[illegible],-2
55	.[illegible],-2	.[illegible],-2	.[illegible],-2	.[illegible],-2	.[illegible],-2
56	.[illegible],-2	.[illegible],-2	.[illegible],-2	.[illegible],-2	.[illegible],-2
57	.[illegible],-2	.[illegible],-2	.[illegible],-2	.[illegible],-2	.[illegible],-2
58	.[illegible],-2	.[illegible],-2	.[illegible],-2	.[illegible],-2	.[illegible],-2
59	.[illegible],-2	.[illegible],-2	.[illegible],-2	.[illegible],-2	.[illegible],-2
60	.[illegible],-2	.[illegible],-2	.[illegible],-3	.[illegible],-3	.[illegible],-2

Run No. 13: u component

N	Anemometer Position Number 1	2	3	4	5
00	.147,-1	.146,-1	.129,-1	.205,-1	.231,-1
01	.106,-2	.693,-2	.618,-2	.980,-2	.111,-1
02	.685,-3	.676,-3	.713,-3	.941,-3	.102,-2
03	.215,-3	.318,-3	.288,-3	.365,-3	.293,-3
04	.154,-3	.279,-3	.207,-3	.310,-3	.167,-3
05	.139,-3	.240,-3	.219,-3	.173,-3	.245,-3
06	.109,-3	.157,-3	.120,-3	.902,-4	.349,-3
07	.665,-4	.101,-3	.784,-4	.847,-4	.229,-3
08	.274,-4	.102,-3	.100,-3	.466,-4	.242,-3
09	.270,-4	.138,-3	.117,-3	.589,-4	.224,-3
10	.338,-4	.136,-3	.759,-4	.108,-3	.171,-3
11	.350,-4	.117,-3	.536,-4	.951,-4	.154,-3
12	.575,-4	.866,-4	.404,-4	.612,-4	.138,-3
13	.495,-4	.551,-4	.505,-4	.661,-4	.144,-3
14	.502,-4	.456,-4	.590,-4	.624,-4	.117,-3
15	.451,-4	.360,-4	.745,-4	.333,-4	.125,-3
16	.470,-4	.408,-4	.688,-4	.387,-4	.156,-3
17	.402,-4	.550,-4	.544,-4	.464,-4	.144,-3
18	.326,-4	.559,-4	.487,-4	.440,-4	.100,-3
19	.249,-4	.598,-4	.424,-4	.269,-4	.700,-4
20	.135,-4	.223,-4	.278,-4	.167,-4	.801,-4
21	.120,-4	.249,-4	.236,-4	.199,-4	.102,-3
22	.251,-4	.325,-4	.193,-4	.235,-4	.165,-3
23	.490,-4	.362,-4	.178,-4	.243,-4	.159,-3
24	.421,-4	.361,-4	.388,-4	.214,-4	.112,-3
25	.277,-4	.202,-4	.393,-4	.188,-4	.978,-4
26	.252,-4	.166,-4	.178,-4	.146,-4	.105,-3
27	.204,-4	.130,-4	.105,-4	.304,-4	.912,-4
28	.193,-4	.129,-4	.141,-4	.294,-4	.777,-4
29	.191,-4	.137,-4	.148,-4	.188,-4	.616,-4
30	.186,-4	.119,-4	.104,-4	.140,-4	.600,-4
31	.216,-4	.128,-4	.901,-5	.150,-4	.603,-4
32	.171,-4	.188,-4	.109,-4	.124,-4	.689,-4
33	.115,-4	.264,-4	.165,-4	.101,-4	.499,-4
34	.105,-4	.261,-4	.189,-4	.110,-4	.324,-4
35	.110,-4	.234,-4	.179,-4	.136,-4	.281,-4
36	.907,-5	.172,-4	.194,-4	.112,-4	.370,-4
37	.700,-5	.138,-4	.179,-4	.105,-4	.350,-4
38	.631,-5	.180,-4	.140,-4	.102,-4	.305,-4
39	.551,-5	.244,-4	.811,-5	.184,-4	.341,-4
40	.666,-5	.248,-4	.953,-5	.163,-4	.423,-4
41	.907,-5	.195,-4	.175,-4	.113,-4	.417,-4
42	.742,-5	.141,-4	.194,-4	.828,-5	.650,-4
43	.735,-5	.116,-4	.139,-4	.109,-4	.799,-4
44	.786,-5	.112,-4	.932,-5	.121,-4	.682,-4
45	.538,-5	.154,-4	.128,-4	.840,-5	.655,-4
46	.372,-5	.160,-4	.125,-4	.515,-5	.752,-4
47	.590,-5	.109,-4	.891,-5	.562,-5	.869,-4
48	.852,-5	.699,-5	.683,-5	.703,-5	.800,-4
49	.528,-5	.132,-4	.639,-5	.854,-5	.744,-4
50	.277,-5	.255,-4	.719,-5	.602,-5	.694,-4
51	.314,-5	.298,-4	.692,-5	.705,-5	.721,-4
52	.255,-5	.261,-4	.463,-5	.654,-5	.763,-4
53	.269,-5	.161,-4	.580,-5	.518,-5	.609,-4
54	.357,-5	.753,-5	.570,-5	.431,-5	.417,-4
55	.536,-5	.142,-4	.641,-5	.771,-5	.335,-4
56	.520,-5	.235,-4	.507,-5	.715,-5	.308,-4
57	.570,-5	.291,-4	.447,-5	.641,-5	.265,-4
58	.469,-5	.252,-4	.723,-5	.720,-5	.137,-4
59	.372,-5	.157,-4	.774,-5	.590,-5	.838,-5
60	.359,-5	.996,-5	.591,-5	.584,-5	.757,-5

Run No. 13; v component

k	Anemometer Position Number 1	2	3	4	5
00	.852,-2	.523,-2	.729,-2	.702, 2	.725,-2
01	.424,-2	.262,-2	.360,-2	.397,-2	.376,-2
02	.485,-3	.306,-3	.413,-3	.494,-3	.698,-3
03	.174,-3	.104,-3	.977,-4	.143,-3	.266,-3
04	.811,-4	.566,-4	.817,-4	.918,-4	.184,-3
05	.531,-4	.315,-4	.631,-4	.716,-4	.156,-3
06	.423,-4	.268,-4	.414,-4	.459,-4	.127,-3
07	.408,-4	.308,-4	.307,-4	.328,-4	.115,-3
08	.346,-4	.291,-4	.366,-4	.353,-4	.104,-3
09	.416,-4	.144,-4	.474,-4	.357,-4	.951,-4
10	.489,-4	.135,-4	.506,-4	.261,-4	.904,-4
11	.530,-4	.192,-4	.382,-4	.188,-4	.726,-4
12	.477,-4	.201,-4	.277,-4	.213,-4	.586,-4
13	.394,-4	.165,-4	.378,-4	.291,-4	.579,-4
14	.279,-4	.219,-4	.404,-4	.263,-4	.695,-4
15	.360,-4	.340,-4	.344,-4	.264,-4	.101,-3
16	.230,-4	.289,-4	.302,-4	.237,-4	.154,-3
17	.254,-4	.219,-4	.270,-4	.300,-4	.174,-3
18	.206,-4	.224,-4	.363,-4	.240,-4	.170,-3
19	.218,-4	.250,-4	.643,-4	.167,-4	.162,-3
20	.359,-4	.185,-4	.341,-4	.138,-4	.196,-3
21	.417,-4	.187,-4	.275,-4	.185,-4	.227,-3
22	.295,-4	.157,-4	.175,-4	.142,-4	.189,-3
23	.257,-4	.143,-4	.133,-4	.155,-4	.172,-3
24	.355,-4	.971,-5	.213,-4	.164,-4	.214,-3
25	.468,-4	.811,-5	.256,-4	.143,-4	.217,-3
26	.307,-4	.834,-5	.195,-4	.107,-4	.205,-3
27	.186,-4	.734,-5	.248,-4	.124,-4	.179,-3
28	.212,-4	.544,-5	.233,-4	.181,-4	.148,-3
29	.236,-4	.405,-5	.206,-4	.177,-4	.179,-3
30	.179,-4	.498,-5	.162,-4	.131,-4	.177,-3
31	.150,-4	.124,-4	.137,-4	.108,-4	.102,-3
32	.147,-4	.117,-4	.191,-4	.155,-4	.504,-4
33	.186,-4	.655,-5	.266,-4	.194,-4	.490,-4
34	.211,-4	.731,-5	.263,-4	.156,-4	.449,-4
35	.235,-4	.104,-4	.189,-4	.191,-4	.489,-4
36	.187,-4	.976,-5	.135,-4	.124,-4	.550,-4
37	.150,-4	.797,-5	.205,-4	.140,-4	.605,-4
38	.222,-4	.990,-5	.242,-4	.158,-4	.536,-4
39	.266,-4	.104,-4	.185,-4	.193,-4	.561,-4
40	.207,-4	.765,-5	.151,-4	.118,-4	.814,-4
41	.186,-4	.907,-5	.175,-4	.105,-4	.932,-4
42	.215,-4	.749,-5	.180,-4	.998,-5	.810,-4
43	.168,-4	.644,-5	.147,-4	.949,-5	.125,-3
44	.154,-4	.519,-5	.171,-4	.107,-4	.186,-3
45	.175,-4	.664,-5	.171,-4	.996,-5	.181,-3
46	.179,-4	.910,-5	.131,-4	.776,-5	.149,-3
47	.153,-4	.861,-5	.150,-4	.669,-5	.136,-3
48	.190,-4	.104,-4	.193,-4	.575,-5	.155,-3
49	.236,-4	.122,-4	.195,-4	.618,-5	.166,-3
50	.149,-4	.115,-4	.163,-4	.550,-5	.142,-3
51	.124,-4	.992,-5	.119,-4	.579,-5	.114,-3
52	.160,-4	.942,-5	.130,-4	.701,-5	.930,-4
53	.162,-4	.980,-5	.170,-4	.640,-5	.945,-4
54	.116,-4	.833,-5	.175,-4	.648,-5	.101,-3
55	.110,-4	.823,-5	.173,-4	.707,-5	.847,-4
56	.144,-4	.115,-4	.185,-4	.642,-5	.860,-4
57	.186,-4	.119,-4	.214,-4	.809,-5	.844,-4
58	.167,-4	.103,-4	.238,-4	.106,-4	.568,-4
59	.122,-4	.964,-5	.210,-4	.947,-5	.320,-4
60	.852,-5	.103,-4	.141,-4	.759,-5	.243,-4

Run No. 13; w component

	Anemometer Position Number				
N	1	2	3	4	5
00	.120,-3	.223,-2	.136,-2	.426,-5	.545,-4
01	.14[illegible],-4	.100,-2	.648,-3	.454,-5	.459,-4
02	.152,-4	.[illegible]2,-4	.382,-3	.519,-5	.412,-4
03	.119,-4	.279,-4	.817,-4	.521,-5	.477,-4
04	.[illegible]46,-5	.[illegible]95,-4	.556,-4	.481,-5	.349,-4
05	.519,-5	.200,-4	.401,-4	.465,-5	.190,-4
06	.[illegible]86,-5	.168,-4	.350,-4	.411,-5	.126,-4
07	.139,-4	.155,-4	.280,-4	.350,-5	.141,-4
08	.101,-4	.175,-4	.192,-4	.254,-5	.143,-4
09	.872,-5	.120,-4	.215,-4	.270,-5	.124,-4
10	.765,-5	.137,-4	.233,-4	.278,-5	.122,-4
11	.[illegible]89,-5	.147,-4	.215,-4	.201,-5	.118,-4
12	.750,-5	.104,-4	.226,-4	.180,-5	.136,-4
13	.557,-5	.144,-4	.131,-4	.195,-5	.141,-4
14	.[illegible]72,-5	.130,-4	.143,-4	.208,-5	.153,-4
15	.421,-5	.118,-4	.235,-4	.171,-5	.136,-4
16	.[illegible]92,-5	.[illegible]52,-4	.[illegible]96,-4	.[illegible]82,-5	.[illegible]46,-5
17	.520,-5	.121,-4	.[illegible]50,-4	.[illegible]73,-5	.[illegible]47,-5
18	.[illegible]42,-5	.129,-4	.[illegible]17,-4	.[illegible]24,-5	.[illegible]97,-5
19	.[illegible]44,-5	.140,-4	.177,-4	.176,-5	.[illegible]83,-5
20	.106,-4	.166,-4	.158,-4	.237,-5	.110,-4
21	.109,-4	.148,-4	.[illegible]15,-4	.[illegible]32,-5	.[illegible]38,-5
22	.955,-5	.130,-4	.[illegible]15,-4	.[illegible]10,-5	.[illegible]63,-5
23	.114,-4	.121,-4	.[illegible]70,-4	.[illegible]11,-5	.[illegible]79,-5
24	.[illegible]24,-5	.152,-4	.146,-4	.[illegible]08,-5	.[illegible]59,-5
25	.608,-5	.113,-4	.114,-4	.213,-5	.423,-5
26	.534,-5	.120,-4	.[illegible]11,-5	.217,-5	.445,-5
27	.[illegible]05,-5	.134,-4	.[illegible]74,-5	.221,-5	.466,-5
28	.581,-5	.105,-4	.[illegible]30,-5	.164,-5	.517,-5
29	.537,-5	.136,-4	.838,-5	.101,-5	.596,-5
30	.667,-5	.122,-4	.[illegible]41,-5	.127,-5	.[illegible]94,-5
31	.[illegible]30,-5	.108,-4	.[illegible]93,-5	.136,-5	.[illegible]79,-5
32	.572,-5	.139,-4	.[illegible]49,-5	.164,-5	.[illegible]57,-5
33	.[illegible]86,-5	.110,-4	.707,-5	.162,-5	.515,-5
34	.[illegible]38,-5	.121,-4	.754,-5	.146,-5	.[illegible]51,-5
35	.[illegible]09,-5	.132,-4	.[illegible]36,-5	.136,-5	.[illegible]73,-5
36	.[illegible]80,-5	.[illegible]94,-5	.106,-4	.120,-5	.471,-5
37	.170,-5	.135,-4	.127,-4	.174,-5	.311,-5
38	.120,-5	.114,-4	.141,-4	.205,-5	.[illegible]82,-5
39	.[illegible]28,-5	.101,-4	.145,-4	.[illegible]33,-5	.372,-5
40	.[illegible]24,-5	.[illegible]37,-4	.118,-4	.[illegible]18,-5	.352,-5
41	.[illegible]09,-5	.[illegible]05,-4	.110,-4	.124,-5	.274,-5
42	.221,-5	.113,-4	.[illegible]12,-4	.[illegible]13,-5	.205,-5
43	.[illegible]62,-5	.125,-4	.[illegible]35,-4	.120,-5	.[illegible]64,-5
44	.[illegible]61,-5	.[illegible]35,-5	.[illegible]59,-4	.110,-5	.276,-5
45	.132,-5	.127,-4	.142,-4	.[illegible]07,-5	.274,-5
46	.[illegible]11,-5	.[illegible]11,-4	.[illegible]05,-4	.[illegible]08,-5	.[illegible]18,-5
47	.[illegible]14,-5	.[illegible]72,-5	.741,-5	.[illegible]19,-6	.[illegible]07,-5
48	.[illegible]04,-5	.[illegible]89,-4	.[illegible]09,-5	.[illegible]14,-5	.[illegible]85,-5
49	.[illegible]08,-6	.[illegible]65,-5	.[illegible]04,-4	.[illegible]05,-5	.[illegible]38,-5
50	.[illegible]65,-6	.[illegible]11,-4	.[illegible]17,-4	.[illegible]36,-6	.[illegible]96,-5
51	.[illegible]39,-6	.[illegible]26,-4	.[illegible]88,-5	.[illegible]05,-5	.[illegible]67,-5
52	.[illegible]63,-6	.[illegible]22,-5	.[illegible]51,-5	.[illegible]05,-5	.[illegible]47,-5
53	.[illegible]08,-6	.[illegible]25,-4	.[illegible]25,-5	.[illegible]69,-6	.[illegible]47,-5
54	.[illegible]01,-5	.[illegible]12,-4	.[illegible]34,-5	.[illegible]54,-6	.[illegible]28,-5
55	.[illegible]51,-5	.[illegible]70,-5	.[illegible]10,-4	.[illegible]12,-6	.[illegible]12,-5
56	.[illegible]10,-5	.[illegible]30,-4	.[illegible]31,-4	.[illegible]89,-6	.[illegible]48,-5
57	.[illegible]96,-6	.[illegible]84,-5	.[illegible]26,-4	.[illegible]08,-5	.[illegible]79,-5
58	.[illegible]34,-5	.[illegible]13,-4	.[illegible]14,-4	.[illegible]26,-5	.[illegible]52,-5
59	.[illegible]67,-5	.[illegible]24,-4	.[illegible]08,-5	.[illegible]11,-5	.[illegible]25,-5
60	.[illegible]39,-5	.[illegible]70,-5	.[illegible]24,-5	.[illegible]46,-6	.[illegible]26,-5

Run No. 15; u component

	Anemometer Position Number				
N	1	2	3	4	5
00	.815,-1	.741,-1	.716,-1	.114	.163
01	.783,-1	.699,-1	.620,-1	.110	.163
02	.572,-1	.672,-1	.517,-1	.943,-1	.120
03	.408,-1	.517,-1	.377,-1	.651,-1	.874,-1
04	.298,-1	.319,-1	.242,-1	.421,-1	.620,-1
05	.196,-1	.209,-1	.200,-1	.318,-1	.382,-1
06	.192,-1	.172,-1	.162,-1	.237,-1	.229,-1
07	.156,-1	.158,-1	.117,-1	.225,-1	.178,-1	
08	.117,-1	.128,-1	.106,-1	.216,-1	.158,-1
09	.965,-2	.103,-1	.103,-1	.145,-1	.144,-1
10	.901,-2	.878,-2	.979,-2	.119,-1	.143,-1
11	.758,-2	.797,-2	.898,-2	.128,-1	.137,-1
12	.595,-2	.641,-2	.107,-2	.115,-1	.104,-1
13	.401,-2	.517,-2	.950,-2	.822,-2	.795,-2
14	.370,-2	.554,-2	.967,-2	.904,-2	.745,-2
15	.420,-2	.441,-2	.482,-2	.885,-2	.904,-2
16	.509,-2	.447,-2	.495,-2	.105,-1	.944,-2
17	.590,-2	.552,-2	.430,-2	.913,-2	.8[illegible],-2
18	.487,-2	.462,-2	.[illegible],-2	.[illegible],-2	.501,-2
19	.352,-2	.403,-2	.358,-2	.[illegible],-2	.[illegible],-2
20	.[illegible],-2	.[illegible],-2	.331,-2	.597,-2	.387,-2
21	.271,-2	.[illegible],-2	.233,-2	.550,-2	.340,-2
22	.[illegible],-2	.[illegible],-2	.[illegible],-2	.[illegible],-2	.300,-2
23	.315,-2	.[illegible],-2	.[illegible],-2	.[illegible],-2	.270,-2
24	.[illegible],-2	.[illegible],-2	.[illegible],-2	.403,-2	.197,-2
25	.222,-2	.[illegible],-2	.[illegible],-2	.377,-2	.[illegible],-2
26	.[illegible],-2	.[illegible],-2	.[illegible],-2	.[illegible],-2	.[illegible],-2
27	.241,-2	.214,-2	.173,-2	.305,-2	.341,-2
28	.[illegible],-2	.185,-2	.[illegible],-2	.[illegible],-2	.[illegible],-2
29	.[illegible],-2	.177,-2	.[illegible],-2	.300,-2	.240,-2
30	.[illegible],-2	.149,-2	.[illegible],-2	.[illegible],-2	.[illegible],-2
31	.[illegible],-2	.[illegible],-2	.[illegible],-2	.[illegible],-2	.[illegible],-2
32	.[illegible],-2	.192,-2	.[illegible],-2	.[illegible],-2	.[illegible],-2
33	.[illegible],-2	.[illegible],-2	.[illegible],-2	.[illegible],-2	.[illegible],-2
34	.[illegible],-2	.[illegible],-2	.[illegible],-2	.[illegible],-2	.[illegible],-2
35	.[illegible],-2	.[illegible],-2	.[illegible],-2	.[illegible],-2	.[illegible],-2
36	.[illegible],-2	.[illegible],-2	.[illegible],-2	.[illegible],-2	.[illegible],-2
37	.[illegible],-2	.[illegible],-2	.[illegible],-2	.[illegible],-2	.[illegible],-2
38	.[illegible],-2	.[illegible],-2	.[illegible],-2	.[illegible],-2	.[illegible],-2
39	.[illegible],-2	.[illegible],-2	.[illegible],-2	.[illegible],-2	.[illegible],-2
40	.[illegible],-2	.[illegible],-2	.[illegible],-2	.[illegible],-2	.[illegible],-2
41	.[illegible],-2	.[illegible],-2	.[illegible],-2	.[illegible],-2	.[illegible],-2
42	.[illegible],-2	.[illegible],-2	.[illegible],-2	.[illegible],-2	.[illegible],-2
43	.[illegible],-2	.[illegible],-2	.[illegible],-3	.[illegible],-2	.[illegible],-2
44	.[illegible],-2	.[illegible],-2	.[illegible],-3	.[illegible],-2	.[illegible],-2
45	.[illegible],-2	.[illegible],-3	.[illegible],-3	.[illegible],-2	.[illegible],-2
46	.[illegible],-2	.[illegible],-3	.[illegible],-2	.[illegible],-2	.[illegible],-2
47	.[illegible],-2	.[illegible],-2	.[illegible],-2	.[illegible],-2	.[illegible],-2
48	.[illegible],-2	.[illegible],-3	.[illegible],-2	.[illegible],-2	.[illegible],-2
49	.[illegible],-2	.[illegible],-3	.[illegible],-3	.[illegible],-2	.[illegible],-2
50	.[illegible],-3	.[illegible],-3	.[illegible],-3	.[illegible],-2	.[illegible],-2
51	.[illegible],-2	.[illegible],-3	.[illegible],-3	.[illegible],-2	.[illegible],-2
52	.[illegible],-2	.[illegible],-3	.[illegible],-2	.[illegible],-2	.[illegible],-2
53	.[illegible],-2	.[illegible],-2	.[illegible],-2	.[illegible],-2	.[illegible],-2
54	.[illegible],-2	.[illegible],-3	.[illegible],-2	.[illegible],-2	.[illegible],-2
55	.[illegible],-2	.[illegible],-3	.[illegible],-2	.[illegible],-2	.[illegible],-2
56	.[illegible],-2	.[illegible],-2	.[illegible],-3	.[illegible],-2	.[illegible],-2
57	.[illegible],-3	.[illegible],-2	.[illegible],-3	.[illegible],-2	.[illegible],-2
58	.[illegible],-3	.[illegible],-3	.[illegible],-3	.[illegible],-2	.[illegible],-2
59	.992,-3	.593,-3	.877,-3	.129,-2	.041,-3
60	.953,-3	.444,-3	.668,-3	.111,-2	.000,-3

Run No. 15; v component

	Anemometer Position Number				
N	1	2	3	4	5
00	.204	.229	.234	.525	.302
01	.148	.178	.169	.321	.187
02	.643,-1	.759,-1	.787,-1	.976,-1	.793,-1
03	.270,-1	.311,-1	.361,-1	.515,-1	.452,-1
04	.159,-1	.185,-1	.210,-1	.275,-1	.224,-1
05	.119,-1	.110,-1	.132,-1	.127,-1	.159,-1
06	.892,-2	.819,-2	.980,-2	.869,-2	.104,-1
07	.974,-2	.908,-2	.786,-2	.689,-2	.940,-2
08	.813,-2	.847,-2	.893,-2	.856,-2	.895,-2
09	.574,-2	.760,-2	.720,-2	.789,-2	.886,-2
10	.525,-2	.516,-2	.465,-2	.801,-2	.476,-2
11	.665,-2	.809,-2	.400,-2	.796,-2	.482,-2
12	.645,-2	.471,-2	.412,-2	.624,-2	.516,-2
13	.470,-2	.506,-2	.554,-2	.457,-2	.583,-2
14	.272,-2	.413,-2	.402,-2	.447,-2	.448,-2
15	.242,-2	.307,-2	.480,-2	.538,-2	.407,-2
16	.313,-2	.428,-2	.542,-2	.570,-2	.434,-2
17	.338,-2	.446,-2	.297,-2	.505,-2	.477,-2
18	.322,-2	.490,-2	.313,-2	.491,-2	.475,-2
19	.299,-2	.466,-2	.245,-2	.504,-2	.551,-2
20	.234,-2	.333,-2	.297,-2	.253,-2	.301,-2
21	.263,-2	.268,-2	.235,-2	.259,-2	.268,-2
22	.269,-2	.242,-2	.193,-2	.256,-2	.177,-2
23	.231,-2	.263,-2	.169,-2	.258,-2	.176,-2
24	.253,-2	.250,-2	.165,-2	.231,-2	.189,-2
25	.243,-2	.214,-2	.189,-2	.195,-2	.171,-2
26	.239,-2	.188,-2	.191,-2	.173,-2	.190,-2
27	.250,-2	.169,-2	.187,-2	.147,-2	.236,-2
28	.203,-2	.207,-2	.198,-2	.201,-2	.337, 2
29	.253,-2	.186,-2	.136,-2	.233,-2	.204, 2
30	.321,-2	.201,-2	.121,-2	.215,-2	.163,-2
31	.272,-2	.202,-2	.175,-2	.242,-2	.172,-2
32	.104,-2	.198,-2	.174,-2	.224,-2	.118,-2
33	.149,-2	.200,-2	.131,-2	.179,-2	.108,-2
34	.143,-2	.201,-2	.150,-2	.172,-2	.159,-2
35	.159,-2	.174,-2	.175,-2	.168,-2	.197,-2
36	.170,-2	.155,-2	.161,-2	.179,-2	.149,-2
37	.150,-2	.140,-2	.147,-2	.201,-2	.134,-2
38	.173,-2	.120,-2	.973,-3	.178,-2	.152,-2
39	.181,-2	.139,-2	.105,-2	.143,-2	.159,-2
40	.168,-2	.200,-2	.117,-2	.129,-2	.157,-2
41	.110,-2	.178,-2	.122,-2	.189,-2	.148,-2
42	.108,-2	.173,-2	.102,-2	.176,-2	.119,-2
43	.108,-2	.200,-2	.175,-2	.205,-2	.957,-3
44	.134,-2	.174,-2	.905,-3	.152,-2	.134,-2
45	.148,-2	.130,-2	.114,-2	.134,-2	.168,-2
46	.145,-2	.140,-2	.107,-2	.147,-2	.143,-2
47	.139,-2	.102,-2	.129,-2	.200,-2	.130,-2
48	.124,-2	.190,-2	.123,-2	.242,-2	.158,-2
49	.130,-2	.179,-2	.140,-2	.176,-2	.172,-2
50	.153,-2	.202,-2	.125,-2	.158,-2	.168,-2
51	.132,-2	.180,-2	.133,-2	.170,-2	.158,-2
52	.992,-3	.152,-2	.147,-2	.144,-2	.203,-2
53	.113,-2	.142,-2	.125,-2	.133,-2	.211,-2
54	.134,-2	.198,-2	.119,-2	.151,-2	.200,-2
55	.136,-2	.208,-2	.144,-2	.144,-2	.199,-2
56	.137,-2	.150,-2	.157,-2	.108,-2	.166,-2
57	.132,-2	.169,-2	.138,-2	.977,-3	.126,-2
58	.134,-2	.207,-2	.123,-2	.131,-2	.123,-2
59	.143,-2	.134,-2	.918,-3	.143,-2	.131,-2
60	.118,-2	.821,-3	.607,-3	.117,-2	.104,-2

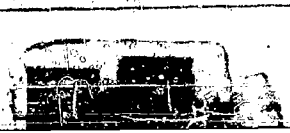

Run No. 15; w component

N	Anemometer Position Number 1	2	3	4	5
00	.351,-2	.257,-2	.[illegible],-2	.479,-2	.231,-2
01	.371,-2	.[illegible],-2	.[illegible],-2	.[illegible],-2	.[illegible],-2
02	.311,-2	.[illegible],-2	.[illegible],-2	.[illegible],-2	.272,-2
03	.314,-2	.[illegible],-2	.[illegible],-2	.[illegible],-2	.[illegible],-2
04	.321,-2	.[illegible],-2	.[illegible],-2	.456,-2	.[illegible],-
05	.[illegible],-2	.208,-2	.[illegible],-2	.[illegible],-2	.[illegible],-2
06	.414,-2	.277,-2	.[illegible],-2	.[illegible],-2	.[illegible],-2
07	.[illegible],-2	.271,-2	.[illegible],-2	.[illegible],-2	.[illegible],-2
08	.[illegible],-2	.[illegible],-2	.[illegible],-2	.[illegible],-2	.[illegible],-2
09	.[illegible],-2	.[illegible],-2	.[illegible],-2	.[illegible],-2	.[illegible],-2
10	.[illegible],-2	.[illegible],-2	.[illegible],-2	.[illegible],-2	.[illegible],-2
11	.[illegible],-2	.[illegible],-2	.[illegible],-2	.[illegible],-2	.[illegible],-2
12	.[illegible],-2	.[illegible],-2	.[illegible],-2	.[illegible],-2	.[illegible],-2
13	.[illegible],-2	.[illegible],-2	.[illegible],-2	.215,-2	.[illegible],-2
14	.[illegible],-2	.[illegible],-2	.[illegible],-2	.[illegible],-2	.[illegible],-2
15	.[illegible],-2	.[illegible],-2	.[illegible],-2	.[illegible],-2	.[illegible],-2
16	.[illegible],-2	.[illegible],-2	.[illegible],-2	.[illegible],-2	.[illegible],-2
17	.[illegible],-2	.[illegible],-2	.[illegible],-2	.[illegible],-2	.[illegible],-2
18	.[illegible],-2	.[illegible],-2	.[illegible],-2	.[illegible],-2	.[illegible],-2
19	.[illegible],-2	.[illegible],-2	.[illegible],-2	.[illegible],-2	.[illegible],-2
20	.[illegible],-2	.[illegible],-2	.[illegible],-2	.[illegible],-2	.[illegible],-2
21	.[illegible],-2	.[illegible],-2	.[illegible],-2	.[illegible],-2	.[illegible],-2
22	.[illegible],-2	.[illegible],-2	.[illegible],-2	.[illegible],-2	.[illegible],-2
23	.[illegible],-2	.[illegible],-2	.[illegible],-2	.[illegible],-2	.[illegible],-2
24	.[illegible],-2	.[illegible],-2	.[illegible],-2	.[illegible],-2	.[illegible],-2
25	.[illegible],-2	.[illegible],-2	.[illegible],-2	.[illegible],-2	.[illegible],-2
26	.[illegible],-2	.[illegible],-2	.[illegible],-2	.[illegible],-2	.[illegible],-2
27	.[illegible],-2	.[illegible],-2	.[illegible],-2	.[illegible],-2	.[illegible],-2
28	.[illegible],-2	.[illegible],-2	.[illegible],-2	.[illegible],-2	.[illegible],-2
29	.[illegible],-2	.[illegible],-2	.[illegible],-2	.[illegible],-2	.[illegible],-2
30	.[illegible],-2	.[illegible],-2	.[illegible],-2	.[illegible],-2	.[illegible],-2
31	.[illegible],-2	.[illegible],-2	.[illegible],-2	.[illegible],-2	.[illegible],-2
32	.[illegible],-2	.[illegible],-2	.[illegible],-2	.[illegible],-2	.[illegible],-2
33	.[illegible],-2	.[illegible],-2	.[illegible],-2	.[illegible],-2	.[illegible],-2
34	.[illegible],-2	.[illegible],-2	.[illegible],-2	.[illegible],-2	.[illegible],-2
35	.[illegible],-2	.[illegible],-2	.[illegible],-2	.[illegible],-2	.[illegible],-2
36	.[illegible],-2	.[illegible],-3	.[illegible],-2	.[illegible],-3	.[illegible],-3
37	.[illegible],-2	.[illegible],-3	.[illegible],-2	.[illegible],-3	.[illegible],-3
38	.[illegible],-2	.[illegible],-2	.[illegible],-2	.[illegible],-2	.[illegible],-2
39	.[illegible],-2	.[illegible],-2	.[illegible],-2	.[illegible],-2	.[illegible],-2
40	.[illegible],-2	.[illegible],-2	.[illegible],-2	.[illegible],-2	.[illegible],-2
41	.[illegible],-2	.[illegible],-2	.[illegible],-2	.[illegible],-2	.[illegible],-2
42	.[illegible],-2	.[illegible],-2	.[illegible],-3	.[illegible],-2	.[illegible],-2
43	.[illegible],-2	.[illegible],-2	.[illegible],-2	.[illegible],-2	.[illegible],-3
44	.[illegible],-2	.[illegible],-2	.[illegible],-2	.[illegible],-2	.[illegible],-2
45	.[illegible],-3	.[illegible],-2	.[illegible],-2	.[illegible],-2	.[illegible],-2
46	.[illegible],-2	.[illegible],-2	.[illegible],-2	.[illegible],-2	.[illegible],-2
47	.[illegible],-2	.[illegible],-2	.[illegible],-2	.[illegible],-2	.[illegible],-2
48	.[illegible],-2	.[illegible],-2	.[illegible],-2	.[illegible],-2	.[illegible],-2
49	.[illegible],-2	.[illegible],-3	.[illegible],-2	.[illegible],-3	.[illegible],-2
50	.[illegible],-2	.[illegible],-2	.[illegible],-2	.[illegible],-3	.[illegible],-2
51	.[illegible],-2	.[illegible],-2	.[illegible],-2	.[illegible],-3	.[illegible],-2
52	.[illegible],-3	.[illegible],-2	.[illegible],-2	.[illegible],-2	.[illegible],-2
53	.[illegible],-2	.[illegible],-2	.[illegible],-2	.[illegible],-3	.[illegible],-2
54	.[illegible],-3	.[illegible],-2	.[illegible],-2	.[illegible],-3	.[illegible],-2
55	.[illegible],-2	.[illegible],-2	.[illegible],-3	.[illegible],-2	.[illegible],-2
56	.[illegible],-2	.[illegible],-2	.[illegible],-2	.[illegible],-2	.[illegible],-2
57	.[illegible],-2	.[illegible],-2	.[illegible],-2	.[illegible],-3	.[illegible],-2
58	.[illegible],-2	.[illegible],-2	.[illegible],-2	.[illegible],-3	.[illegible],-2
59	.907,-3	.[illegible],-2	.[illegible],-3	.739,-3	.[illegible],-2
60	.[illegible],-3	.997,-3	.[illegible],-3	.[illegible],-3	352,-3

Run No. 161 u component

N	Anemometer Position Number				
	1	3	4	4	5
00	.238	.210	.240	.421	.425
01	.227	.204	.208	.214	.244
02	.170	.161	.170	.171	.172
03	.410,-1	.119	.720,-1	.195	.169
04	.651,-1	.942,-1	.624,-1	.772,-1	.708,-1
05	.450,-1	.[illegible],-1	.[illegible],-1	.423,-1	.423,-1
06	.177,-1	.[illegible],-1	.[illegible],-1	.259,-1	.251,-1
07	.134,-1	.102,-1	.102,-1	.217,-1	.164,-1
08	.120,-1	.134,-1	.125,-1	.206,-1	.171,-1
09	.620,-2	.10[illegible],-1	.648,-2	.141,-1	.1[illegible]7,-1
10	.[illegible],-2	.10[illegible],-1	.[illegible],-2	.140,-1	.1[illegible],-1
11	.[illegible],-2	.[illegible],-2	.[illegible],-2	.[illegible],-2	.[illegible],-1
12	.[illegible],-2	.[illegible],-2	.[illegible],-2	.[illegible],-2	.111,-1
13	.[illegible],-2	.[illegible],-2	.[illegible],-2	.[illegible],-2	.[illegible],-2
14	.[illegible],-2	.[illegible],-2	.[illegible],-2	.[illegible],-2	.[illegible],-2
15	.[illegible],-2	.[illegible],-2	.[illegible],-2	.[illegible],-2	.[illegible],-2
16	.[illegible],-2	.[illegible],-2	.[illegible],-2	.[illegible],-2	.[illegible],-2
17	.[illegible],-2	.[illegible],-2	.[illegible],-2	.[illegible],-2	.[illegible],-2
18	.[illegible],-2	.[illegible],-2	.[illegible],-2	.[illegible],-2	.[illegible],-2
19	.[illegible],-2	.[illegible],-2	.[illegible],-2	.[illegible],-2	.[illegible],-2
20	.251,-2	.417,-2	.[illegible],-2	.[illegible],-2	.[illegible],-2
21	.297,-2	.[illegible],-2	.181,-2	.[illegible],-2	.[illegible],-2
22	.367,-2	.269,-2	.[illegible],-2	.[illegible],-2	.[illegible],-2
23	.311,-2	.269,-2	.220,-2	.[illegible],-2	.441,-2
24	.250,-2	.280,-2	.249,-2	.428,-2	.440,-2
25	.209,-2	.281,-2	.233,-2	.330,-2	.402,-2
26	.330,-2	.269,-2	.195,-2	.246,-2	.347,-2
27	.304,-2	.225,-2	.176,-2	.255,-2	.330,-2
28	.251,-2	.274,-2	.171,-2	.279,-2	.351,-2
29	.265,-2	.[illegible],-2	.189,-2	.280,-2	.254,-2
30	.[illegible],-2	.[illegible],-2	.[illegible],-2	.[illegible],-2	.[illegible],-2
31	.[illegible],-2	.[illegible],-2	.[illegible],-2	.[illegible],-2	.[illegible],-2
32	.[illegible],-2	.[illegible],-2	.[illegible],-2	.[illegible],-2	.[illegible],-2
33	.[illegible],-2	.[illegible],-2	.[illegible],-2	.[illegible],-2	.[illegible],-2
34	.[illegible],-2	.[illegible],-2	.[illegible],-2	.[illegible],-2	.[illegible],-2
35	.[illegible],-2	.[illegible],-2	.[illegible],-2	.[illegible],-2	.[illegible],-2
36	.[illegible],-2	.[illegible],-2	.[illegible],-2	.[illegible],-2	.[illegible],-2
37	.[illegible],-2	.[illegible],-2	.[illegible],-2	.[illegible],-2	.[illegible],-2
38	.[illegible],-2	.[illegible],-2	.[illegible],-2	.[illegible],-2	.[illegible],-2
39	.[illegible],-2	.[illegible],-2	.[illegible],-2	.[illegible],-2	.[illegible],-2
40	.144,-2	.141,-2	.[illegible],-2	.[illegible],-2	.[illegible],-2
41	.[illegible],-2	.[illegible],-2	.[illegible],-2	.[illegible],-2	.[illegible],-2
42	.[illegible],-2	.[illegible],-2	.[illegible],-2	.[illegible],-2	.[illegible],-2
43	.[illegible],-2	.[illegible],-2	.[illegible],-2	.[illegible],-2	.[illegible],-2
44	.[illegible],-2	.[illegible],-2	.[illegible],-2	.[illegible],-2	.[illegible],-2
45	.[illegible],-2	.[illegible],-2	.[illegible],-2	.[illegible],-2	.[illegible],-2
46	.[illegible],-2	.[illegible],-2	.[illegible],-2	.[illegible],-2	.[illegible],-2
47	.[illegible],-2	.[illegible],-2	.[illegible],-2	.[illegible],-2	.[illegible],-2
48	.[illegible],-2	.[illegible],-2	.[illegible],-2	.[illegible],-2	.[illegible],-2
49	.[illegible],-2	.[illegible],-2	.[illegible],-2	.[illegible],-2	.[illegible],-2
50	.[illegible],-2	.[illegible],-2	.[illegible],-2	.[illegible],-2	.[illegible],-2
51	.[illegible],-2	.[illegible],-2	.[illegible],-2	.[illegible],-2	.[illegible],-2
52	.[illegible],-2	.[illegible],-2	.[illegible],-2	.[illegible],-2	.[illegible],-2
53	.[illegible],-2	.[illegible],-2	.[illegible],-2	.[illegible],-2	.[illegible],-2
54	.[illegible],-2	.[illegible],-2	.[illegible],-2	.[illegible],-2	.[illegible],-2
55	.[illegible],-2	.[illegible],-2	.[illegible],-2	.[illegible],-2	.[illegible],-2
56	.[illegible],-2	.[illegible],-2	.[illegible],-2	.[illegible],-2	.[illegible],-2
57	.[illegible],-2	.[illegible],-2	.[illegible],-2	.[illegible],-2	.[illegible],-2
58	.[illegible],-2	.[illegible],-2	.[illegible],-2	.[illegible],-2	.[illegible],-2
59	.[illegible],-2	.[illegible],-2	.[illegible],-2	.[illegible],-2	.[illegible],-2
60	.764,-2	.[illegible],-2	.[illegible],-2	.[illegible],-2	.[illegible],-2



Run No. 16; v component

N	Anemometer Position Number 1	2	3	4	5
00	.660	.641	.609	.708	.576
01	.404	.384	.378	.449	.360
02	.123	.106	.104	.127	.129
03	.592,-1	.527,-1	.548,-1	.465,-1	.731,-1
04	.303,-1	.369,-1	.398,-1	.337,-1	.415,-1
05	.247,-1	.184,-1	.197,-1	.184,-1	.250,-1
06	.233,-1	.116,-1	.121,-1	.155,-1	.151,-1
07	.259,-1	.126,-1	.968,-2	.157,-1	.144,-1
08	.220,-1	.137,-1	.789,-2	.101,-1	.148,-1
09	.141,-1	.136,-1	.804,-2	.109,-1	.121,-1
10	.977,-2	.985,-2	.492,-2	.102,-1	.951,-2
11	.741,-2	.706,-2	.412,-2	.829,-2	.580,-2
12	.670,-2	.660,-2	.390,-2	.698,-2	.481,-2
13	.663,-2	.701,-2	.415,-2	.791,-2	.512,-2
14	.566,-2	.579,-2	.414,-2	.747,-2	.505,-2
15	.516,-2	.530,-2	.422,-2	.550,-2	.421,-2
16	.487,-2	.502,-2	.390,-2	.425,-2	.559,-2
17	.474,-2	.461,-2	.444,-2	.441,-2	.567,-2
18	.475,-2	.481,-2	.512,-2	.515,-2	.532,-2
19	.399,-2	.566,-2	.405,-2	.469,-2	.269,-2
20	.202,-2	.218,-2	.242,-2	.268,-2	.214,-2
21	.244,-2	.273,-2	.296,-2	.244,-2	.250,-2
22	.262,-2	.266,-2	.189,-2	.230,-2	.197,-2
23	.339,-2	.274,-2	.191,-2	.251,-2	.211,-2
24	.225,-2	.246,-2	.222,-2	.212,-2	.240,-2
25	.207,-2	.209,-2	.233,-2	.224,-2	.221,-2
26	.215,-2	.245,-2	.214,-2	.140,-2	.220,-2
27	.172,-2	.272,-2	.251,-2	.174,-2	.244,-2
28	.178,-2	.239,-2	.222,-2	.185,-2	.190,-2
29	.182,-2	.247,-2	.178,-2	.248,-2	.151,-2
30	.175,-2	.214,-2	.168,-2	.221,-2	.206,-2
31	.221,-2	.277,-2	.153,-2	.154,-2	.206,-2
32	.226,-2	.267,-2	.197,-2	.174,-2	.174,-2
33	.198,-2	.225,-2	.246,-2	.140,-2	.190,-2
34	.169,-2	.216,-2	.194,-2	.144,-2	.241,-2
35	.160,-2	.207,-2	.164,-2	.149,-2	.217,-2
36	.179,-2	.219,-2	.128,-2	.155,-2	.197,-2
37	.184,-2	.170,-2	.107,-2	.149,-2	.214,-2
38	.157,-2	.148,-2	.114,-2	.217,-2	.204,-2
39	.176,-2	.210,-2	.121,-2	.214,-2	.156,-2
40	.232,-2	.250,-2	.124,-2	.184,-2	.179,-2
41	.186,-2	.222,-2	.826,-3	.145,-2	.141,-2
42	.147,-2	.186,-2	.750,-3	.130,-2	.137,-2
43	.155,-2	.152,-2	.100,-2	.175,-2	.151,-2
44	.137,-2	.135,-2	.120,-2	.179,-2	.142,-2
45	.142,-2	.148,-2	.112,-2	.145,-2	.146,-2
46	.131,-2	.162,-2	.144,-2	.106,-2	.147,-2
47	.133,-2	.203,-2	.167,-2	.112,-2	.968,-3
48	.125,-2	.157,-2	.102,-2	.970,-3	.119,-2
49	.124,-2	.155,-2	.145,-2	.811,-3	.154,-2
50	.131,-2	.220,-2	.116,-2	.184,-2	.127,-2
51	.126,-2	.247,-2	.918,-3	.179,-2	.134,-2
52	.101,-2	.272,-2	.757,-3	.142,-2	.124,-2
53	.958,-3	.160,-2	.917,-3	.129,-2	.558,-3
54	.885,-3	.134,-2	.953,-3	.106,-2	.226,-2
55	.151,-2	.142,-2	.910,-3	.116,-2	.246,-2
56	.213,-2	.163,-2	.816,-3	.120,-2	.106,-2
57	.190,-2	.109,-2	.917,-3	.114,-2	.131,-2
58	.160,-2	.129,-2	.104,-2	.964,-3	.161,-2
59	.128,-2	.846,-3	.994,-3	.841,-3	.981,-3
60	.980,-3	.575,-3	.797,-3	.605,-3	.637,-3

Run No. 16; w component

N	Anemometer Position Number 1	2	3	4	5
00	.649,-2	.447,-2	.407,-2	.430,-2	.164,-1
01	.840,-2	.772,-2	.714,-2	.624,-2	.151,-1
02	.861,-2	.[illegible],-2	.758,-2	.[illegible],-2	.[illegible],-2
03	.727,-2	.671,-2	.758,-2	.[illegible],-2	.629,-2
04	.872,-2	.[illegible],-2	.859,-2	.[illegible],-2	.[illegible],-2
05	.806,-2	.[illegible],-2	.771,-2	.[illegible],-2	.550,-2
06	.529,-2	.452,-2	.581,-2	.[illegible],-2	.507,-2
07	.508,-2	.[illegible],-2	.575,-2	.[illegible],-2	.450,-2
08	.586,-2	.519,-2	.[illegible],-2	.[illegible],-2	.[illegible],-2
09	.740,-2	.[illegible],-2	.[illegible],-2	.[illegible],-2	.[illegible],-2
10	.[illegible],-2	.564,-2	.[illegible],-2	.[illegible],-2	.[illegible],-2
11	.540,-2	.[illegible],-2	.[illegible],-2	.[illegible],-2	.[illegible],-2
12	.401,-2	.[illegible],-2	.[illegible],-2	.[illegible],-2	.[illegible],-2
13	.[illegible],-2	.[illegible],-2	.[illegible],-2	.[illegible],-2	.[illegible],-2
14	.[illegible],-2	.[illegible],-2	.[illegible],-2	.[illegible],-2	.[illegible],-2
15	.[illegible],-2	.[illegible],-2	.[illegible],-2	.[illegible],-2	.[illegible],-2
16	.[illegible],-2	.[illegible],-2	.[illegible],-2	.[illegible],-2	.[illegible],-2
17	.[illegible],-2	.[illegible],-2	.[illegible],-2	.[illegible],-2	.[illegible],-2
18	.[illegible],-2	.[illegible],-2	.[illegible],-2	.[illegible],-2	.[illegible],-2
19	.[illegible],-2	.[illegible],-2	.[illegible],-2	.[illegible],-2	.[illegible],-2
20	.[illegible],-2	.[illegible],-2	.[illegible],-2	.[illegible],-2	.[illegible],-2
21	.[illegible],-2	.[illegible],-2	.[illegible],-2	.[illegible],-2	.[illegible],-2
22	.[illegible],-2	.[illegible],-2	.[illegible],-2	.[illegible],-2	.[illegible],-2
23	.[illegible],-2	.[illegible],-2	.[illegible],-2	.[illegible],-2	.[illegible],-2
24	.[illegible],-2	.[illegible],-2	.[illegible],-2	.[illegible],-2	.[illegible],-2
25	.[illegible],-2	.[illegible],-2	.[illegible],-2	.[illegible],-2	.[illegible],-2
26	.[illegible],-2	.[illegible],-2	.[illegible],-2	.[illegible],-2	.[illegible],-2
27	.[illegible],-2	.[illegible],-2	.[illegible],-2	.[illegible],-2	.[illegible],-2
28	.[illegible],-2	.[illegible],-2	.[illegible],-2	.[illegible],-2	.[illegible],-2
29	.[illegible],-2	.[illegible],-2	.[illegible],-2	.[illegible],-2	.[illegible],-2
30	.[illegible],-2	.[illegible],-2	.[illegible],-2	.[illegible],-2	.[illegible],-2
31	.[illegible],-2	.[illegible],-2	.[illegible],-2	.[illegible],-2	.[illegible],-2
32	.[illegible],-2	.[illegible],-2	.[illegible],-2	.[illegible],-2	.[illegible],-2
33	.[illegible],-2	.[illegible],-2	.[illegible],-2	.[illegible],-2	.[illegible],-2
34	.[illegible],-2	.[illegible],-2	.[illegible],-2	.[illegible],-2	.[illegible],-2
35	.[illegible],-2	.[illegible],-2	.[illegible],-2	.[illegible],-2	.[illegible],-2
36	.[illegible],-2	.[illegible],-2	.[illegible],-2	.[illegible],-2	.[illegible],-2
37	.[illegible],-2	.[illegible],-2	.[illegible],-2	.[illegible],-2	.[illegible],-2
38	.[illegible],-2	.[illegible],-2	.[illegible],-2	.[illegible],-2	.[illegible],-2
39	.[illegible],-2	.[illegible],-2	.[illegible],-2	.[illegible],-2	.[illegible],-2
40	.[illegible],-2	.[illegible],-2	.[illegible],-2	.[illegible],-2	.[illegible],-2
41	.[illegible],-2	.[illegible],-2	.[illegible],-2	.[illegible],-2	.[illegible],-2
42	.[illegible],-2	.[illegible],-2	.[illegible],-2	.[illegible],-2	.[illegible],-2
43	.[illegible],-2	.[illegible],-2	.[illegible],-2	.[illegible],-2	.[illegible],-2
44	.[illegible],-2	.[illegible],-2	.[illegible],-2	.[illegible],-2	.[illegible],-2
45	.[illegible],-2	.[illegible],-2	.[illegible],-2	.[illegible],-2	.[illegible],-2
46	.[illegible],-2	.[illegible],-2	.[illegible],-2	.[illegible],-2	.[illegible],-2
47	.[illegible],-2	.[illegible],-2	.[illegible],-2	.[illegible],-2	.[illegible],-2
48	.[illegible],-2	.[illegible],-2	.[illegible],-2	.[illegible],-2	.[illegible],-2
49	.[illegible],-2	.[illegible],-2	.[illegible],-2	.[illegible],-2	.[illegible],-2
50	.[illegible],-2	.[illegible],-2	.[illegible],-2	.[illegible],-2	.[illegible],-2
51	.[illegible],-2	.[illegible],-2	.[illegible],-2	.[illegible],-2	.[illegible],-2
52	.[illegible],-2	.[illegible],-2	.[illegible],-2	.[illegible],-2	.[illegible],-2
53	.[illegible],-2	.[illegible],-2	.[illegible],-2	.[illegible],-2	.[illegible],-2
54	.[illegible],-2	.[illegible],-2	.[illegible],-2	.[illegible],-2	.[illegible],-2
55	.[illegible],-2	.[illegible],-2	.[illegible],-2	.[illegible],-2	.[illegible],-2
56	.[illegible],-2	.[illegible],-2	.[illegible],-2	.[illegible],-2	.[illegible],-2
57	.[illegible],-2	.[illegible],-2	.[illegible],-2	.[illegible],-2	.[illegible],-2
58	.[illegible],-2	.[illegible],-2	.[illegible],-2	.[illegible],-2	.[illegible],-2
59	.[illegible],-2	.[illegible],-3	.[illegible],-2	.[illegible],-3	.[illegible],-3
60	.[illegible],-3	.[illegible],-3	.[illegible],-3	.[illegible],-3	.[illegible],-3



Run No. 17; u component

N	Anemometer Position Number 1	2	3	4	5
00	.421,-1	.388,-1	.344,-1	.695,-1	.402,-1
01	.457,-1	.427,-1	.341,-1	.696,-1	.412,-1
02	.362,-1	.345,-1	.287,-1	.609,-1	.300,-1
03	.238,-1	.240,-1	.237,-1	.485,-1	.181,-1
04	.195,-1	.193,-1	.183,-1	.321,-1	.155,-1
05	.151,-1	.147,-1	.155,-1	.219,-1	.149,-1
06	.126,-1	.144,-1	.159,-1	.138,-1	.122,-1
07	.102,-1	.124,-1	.117,-1	.101,-1	.787,-2
08	.906,-2	.952,-2	.897,-2	.120,-1	.746,-2
09	.575,-2	.664,-2	.599,-2	.133,-1	.730,-2
10	.617,-2	.502,-2	.450,-2	.929,-2	.681,-2
11	.820,-2	.573,-2	.559,-2	.707,-2	.676,-2
12	.772,-2	.610,-2	.695,-2	.773,-2	.660,-2
13	.557,-2	.487,-2	.615,-2	.792,-2	.677,-2
14	.530,-2	.514,-2	.584,-2	.917,-2	.578,-2
15	.532,-2	.509,-2	.495,-2	.787,-2	.476,-2
16	.371,-2	.337,-2	.455,-2	.441,-2	.511,-2
17	.338,-2	.231,-2	.297,-2	.457,-2	.500,-2
18	.273,-2	.158,-2	.205,-2	.478,-2	.565,-2
19	.277,-2	.221,-2	.244,-2	.500,-2	.575,-2
20	.293,-2	.317,-2	.318,-2	.590,-2	.580,-2
21	.280,-2	.342,-2	.266,-2	.461,-2	.427,-2
22	.229,-2	.306,-2	.170,-2	.303,-2	.239,-2
23	.217,-2	.258,-2	.206,-2	.274,-2	.179,-2
24	.224,-2	.219,-2	.193,-2	.247,-2	.192,-2
25	.186,-2	.176,-2	.224,-2	.270,-2	.242,-2
26	.167,-2	.158,-2	.281,-2	.226,-2	.221,-2
27	.204,-2	.140,-2	.212,-2	.213,-2	.254,-2
28	.210,-2	.144,-2	.182,-2	.184,-2	.277,-2
29	.135,-2	.128,-2	.166,-2	.139,-2	.198,-2
30	.132,-2	.140,-2	.146,-2	.160,-2	.224,-2
31	.158,-2	.168,-2	.205,-2	.280,-2	.303,-2
32	.170,-2	.165,-2	.188,-2	.269,-2	.254,-2
33	.140,-2	.189,-2	.127,-2	.170,-2	.207,-2
34	.124,-2	.201,-2	.146,-2	.182,-2	.188,-2
35	.115,-2	.183,-2	.134,-2	.185,-2	.146,-2
36	.106,-2	.194,-2	.105,-2	.154,-2	.138,-2
37	.129,-2	.217,-2	.713,-3	.145,-2	.115,-2
38	.159,-2	.212,-2	.724,-3	.140,-2	.943,-3
39	.176,-2	.145,-2	.875,-3	.136,-2	.107,-2
40	.168,-2	.131,-2	.872,-3	.159,-2	.120,-2
41	.146,-2	.156,-2	.106,-2	.174,-2	.134,-2
42	.150,-2	.126,-2	.117,-2	.171,-2	.153,-2
43	.134,-2	.100,-2	.996,-3	.152,-2	.144,-2
44	.130,-2	.860,-3	.936,-3	.127,-2	.965,-3
45	.103,-2	.100,-2	.936,-3	.127,-2	.644,-3
46	.955,-3	.843,-3	.917,-3	.142,-2	.790,-3
47	.109,-2	.797,-3	.103,-2	.100,-2	.115,-2
48	.110,-2	.930,-3	.980,-3	.677,-3	.118,-2
49	.116,-2	.891,-3	.948,-3	.859,-3	.117,-2
50	.118,-2	.798,-3	.804,-3	.115,-2	.111,-2
51	.112,-2	.803,-3	.741,-3	.123,-2	.100,-2
52	.114,-2	.817,-3	.691,-3	.108,-2	.126,-2
53	.102,-2	.796,-3	.772,-3	.789,-3	.141,-2
54	.985,-3	.572,-3	.884,-3	.686,-3	.123,-2
55	.111,-2	.663,-3	.785,-3	.760,-3	.113,-2
56	.964,-3	.776,-3	.567,-3	.969,-3	.931,-3
57	.117,-2	.723,-3	.618,-3	.117,-2	.991,-3
58	.114,-2	.708,-3	.802,-3	.122,-2	.118,-2
59	.829,-3	.694,-3	.676,-3	.103,-2	.118,-2
60	.543,-3	.623,-3	.528,-3	.737,-3	.961,-3

Run No. 17; v component

N	Anemometer Position Number				
	1	2	3	4	5
00	.839,-2	.973,-2	.141,-2	.655,-2	.848,-2
01	.651,-2	.781,-2	.493,-2	.597,-2	.672,-2
02	.555,-2	.572,-2	.385,-2	.549,-2	.597,-2
03	.482,-2	.487,-2	.328,-2	.701,-2	.704,-2
04	.409,-2	.438,-2	.214,-2	.474,-2	.637,-2
05	.353,-2	.433,-2	.230,-2	.341,-2	.509,-2
06	.305,-2	.470,-2	.272,-2	.448,-2	.401,-2
07	.352,-2	.440,-2	.302,-2	.486,-2	.409,-2
08	.317,-2	.400,-2	.310,-2	.342,-2	.383,-2
09	.275,-2	.348,-2	.247,-2	.317,-2	.335,-2
10	.240,-2	.408,-2	.180,-2	.332,-2	.250,-2
11	.250,-2	.397,-2	.195,-2	.315,-2	.256,-2
12	.259,-2	.423,-2	.192,-2	.307,-2	.299,-2
13	.183,-2	.314,-2	.195,-2	.306,-2	.331,-2
14	.304,-2	.225,-2	.105,-2	.205,-2	.340,-2
15	.220,-2	.234,-2	.197,-2	.199,-2	.242,-2
16	.240,-2	.207,-2	.200,-2	.213,-2	.223,-2
17	.207,-2	.197,-2	.164,-2	.193,-2	.340,-2
18	.257,-2	.204,-2	.152,-2	.204,-2	.307,-2
19	.210,-2	.200,-2	.150,-2	.225,-2	.219,-2
20	.165,-2	.184,-2	.157,-2	.140,-2	.234,-2
21	.205,-2	.255,-2	.149,-2	.132,-2	.257,-2
22	.239,-2	.234,-2	.154,-2	.140,-2	.225,-2
23	.222,-2	.248,-2	.170,-2	.130,-2	.196,-2
24	.179,-2	.220,-2	.191,-2	.130,-2	.150,-2
25	.137,-2	.215,-2	.150,-2	.145,-2	.196,-2
26	.153,-2	.204,-2	.911,-3	.150,-2	.217,-2
27	.170,-2	.195,-2	.829,-3	.122,-2	.297,-2
28	.192,-2	.187,-2	.849,-3	.117,-2	.299,-2
29	.219,-2	.189,-2	.671,-3	.112,-2	.180,-2
30	.192,-2	.165,-2	.935,-3	.125,-2	.265,-2
31	.134,-2	.150,-2	.742,-3	.148,-2	.218,-2
32	.160,-2	.155,-2	.530,-3	.104,-2	.297,-2
33	.19 ,-2	.142,-2	.513,-3	.112,-2	.175,-2
34	.197,-2	.151,-2	.607,-3	.130,-2	.145,-2
35	.8 ,-3	.153,-2	.660,-3	.149,-2	.160,-2
36	.137,-2	.145,-2	.917,-3	.1 ,-2	.232,-2
37	.200,-2	.145,-2	.125,-2	.101,-2	.200,-2
38	.177,-2	.107,-2	.124,-2	.144,-2	.172,-2
39	.114,-2	.130,-2	.104,-2	.118,-2	.102,-2
40	.904,-3	.124,-2	.902,-3	.137,-2	.155,-2
41	.907,-3	.140,-2	.737,-3	.143,-2	.132,-2
42	.142,-2	.12 ,-2	.470,-3	.124,-2	.124,-2
43	.177,-2	.110,-2	.700,-3	.127,-2	.130,-2
44	.178,-2	.107,-2	.113,-2	.117,-2	.201,-2
45	.145,-2	.152,-2	.9 ,-3	.119,-2	.215,-2
46	.101,-2	.14 ,-2	.6 ,-3	.137,-2	.151,-2
47	.843,-3	.150,-2	.855,-3	.142,-2	.125,-2
48	.10 ,-2	.142,-2	.103,-2	.158,-2	.120,-2
49	.139,-2	.105,-2	.918,-3	.102,-2	.128,-2
50	.157,-2	.852,-3	.761,-3	.114,-2	.225,-2
51	.150,-2	.902,-3	.772,-3	.125,-2	.289,-2
52	.129,-2	.930,-3	.874,-3	.156,-2	.228,-2
53	.112,-2	.918,-3	.891,-3	.149,-2	.188,-2
54	.113,-2	.106,-2	.797,-3	.143,-2	.172,-2
55	.104,-2	.917,-3	.747,-3	.144,-2	.168,-2
56	.112,-2	.918;-3	.526,-3	.105,-2	.199,-2
57	.119,-2	.105,-2	.750,-3	.807,-3	.200,-2
58	.104,-2	.101,-2	.714,-3	.842,-3	.184,-2
59	.732,-3	.948,-3	.505,-3	.969,-3	.139,-2
60	.621,-3	.796,-3	.413,-3	.818,-3	.117,-2

Run No. 17; w component

N	Anemometer Position Number 1	2	3	4	5
00	.184,-2	.103,-2	.138,-2	.163,-2	.105,-2
01	.204,-2	.141,-2	.159,-2	.151,-2	.124,-2
02	.197,-2	.168,-2	.188,-2	.109,-2	.133,-2
03	.225,-2	.148,-2	.235,-2	.106,-2	.949,-3
04	.252,-2	.148,-2	.203,-2	.129,-2	.791,-3
05	.207,-2	.136,-2	.171,-2	.144,-2	.804,-3
06	.179,-2	.129,-2	.221,-2	.106,-2	.817,-3
07	.210,-2	.148,-2	.198,-2	.132,-2	.118,-2
08	.207,-2	.175,-2	.153,-2	.140,-2	.135,-2
09	.165,-2	.158,-2	.147,-2	.173,-2	.117,-2
10	.155,-2	.135,-2	.115,-2	.137,-2	.997,-3
11	.119,-2	.122,-2	.127,-2	.107,-2	.105,-2
12	.874,-3	.129,-2	.152,-2	.107,-2	.140,-2
13	.158,-2	.145,-2	.143,-2	.116,-2	.140,-2
14	.197,-2	.136,-2	.133,-2	.126,-2	.116,-2
15	.139,-2	.995,-3	.839,-3	.975,-3	.112,-2
16	.125,-2	.114,-2	.674,-3	.981,-3	.102,-2
17	.139,-2	.124,-2	.793,-3	.118,-2	.108,-2
18	.127,-2	.120,-2	.112,-2	.114,-2	.851,-3
19	.123,-2	.134,-2	.133,-2	.118,-2	.676,-3
20	.138,-2	.127,-2	.164,-2	.124,-2	.737,-3
21	.140,-2	.115,-2	.156,-2	.823,-3	.622,-3
22	.130,-2	.118,-2	.124,-2	.621,-3	.592,-3
23	.131,-2	.159,-2	.148,-2	.895,-3	.483,-3
24	.121,-2	.197,-2	.154,-2	.964,-3	.598,-3
25	.115,-2	.183,-2	.165,-2	.947,-3	.904,-3
26	.185,-2	.138,-2	.175,-2	.124,-2	.105,-2
27	.240,-2	.122,-2	.149,-2	.132,-2	.891,-3
28	.197,-2	.115,-2	.166,-2	.994,-3	.771,-3
29	.116,-2	.102,-2	.165,-2	.754,-3	.876,-3
30	.126,-2	.127,-2	.137,-2	.753,-3	.957,-3
31	.162,-2	.129,-2	.128,-2	.123,-2	.954,-3
32	.164,-2	.112,-2	.141,-2	.126,-2	.728,-3
33	.148,-2	.134,-2	.145,-2	.865,-3	.738,-3
34	.159,-2	.143,-2	.138,-2	.906,-3	.775,-3
35	.165,-2	.131,-2	.121,-2	.819,-3	.597,-3
36	.136,-2	.132,-2	.123,-2	.869,-3	.605,-3
37	.104,-2	.141,-2	.108,-2	.943,-3	.684,-3
38	.119,-2	.129,-2	.993,-3	.649,-3	.489,-3
39	.127,-2	.125,-2	.138,-2	.534,-3	.279,-3
40	.140,-2	.109,-2	.131,-2	.691,-3	.354,-3
41	.155,-2	.857,-3	.106,-2	.812,-3	.700,-3
42	.159,-2	.121,-2	.975,-3	.104,-2	.733,-3
43	.161,-2	.168,-2	.926,-3	.108,-2	.680,-3
44	.133,-2	.140,-2	.692,-3	.722,-3	.791,-3
45	.955,-3	.134,-2	.634,-3	.743,-3	.679,-3
46	.979,-3	.149,-2	.875,-3	.846,-3	.566,-3
47	.137,-2	.133,-2	.120,-2	.695,-3	.756,-3
48	.150,-2	.106,-2	.113,-2	.762,-3	.842,-3
49	.131,-2	.869,-3	.102,-2	.774,-3	.900,-3
50	.125,-2	.907,-3	.113,-2	.735,-3	.909,-3
51	.136,-2	.857,-3	.944,-3	.749,-3	.812,-3
52	.147,-2	.825,-3	.893,-3	.743,-3	.855,-3
53	.142,-2	.912,-3	.109,-2	.727,-3	.847,-3
54	.133,-2	.789,-3	.137,-2	.639,-3	.759,-3
55	.110,-2	.880,-3	.152,-2	.574,-3	.548,-3
56	.986,-3	.975,-3	.115,-2	.584,-3	.484,-3
57	.126,-2	.842,-3	.907,-3	.707,-3	.706,-3
58	.130,-2	.869,-3	.909,-3	.110,-2	.987,-3
59	.916,-3	.827,-3	.702,-3	.113,-2	.858,-3
60	.702,-3	.647,-3	.566,-3	.825,-3	.577,-3

Run No. 16; u component

N	Anemometer Position Number 1	2	3	4	5
00	.389,-1	.510,-1	.138,-1	.516,-1	.394,-1
01	.286,-1	.375,-1	.147,-1	.333,-1	.290,-1
02	.200,-1	.303,-1	.201,-1	.230,-1	.210,-1
03	.233,-1	.314,-1	.181,-1	.296,-1	.213,-1
04	.199,-1	.293,-1	.972,-2	.314,-1	.195,-1
05	.154,-1	.230,-1	.815,-2	.246,-1	.145,-1
06	.173,-1	.138,-1	.897,-2	.169,-1	.141,-1
07	.168,-1	.148,-1	.931,-2	.140,-1	.137,-1
08	.131,-1	.136,-1	.962,-2	.126,-1	.128,-1
09	.103,-1	.111,-1	.829,-2	.148,-1	.124,-1
10	.101,-1	.131,-1	.774,-2	.155,-1	.880,-2
11	.935,-2	.116,-1	.718,-2	.136,-1	.814,-2
12	.827,-2	.874,-2	.488,-2	.925,-2	.847,-2
13	.629,-2	.669,-2	.424,-2	.703,-2	.906,-2
14	.430,-2	.723,-2	.446,-2	.943,-2	.788,-2
15	.454,-2	.693,-2	.474,-2	.838,-2	.689,-2
16	.407,-2	.560,-2	.379,-2	.530,-2	.730,-2
17	.353,-2	.611,-2	.349,-2	.676,-2	.672,-2
18	.456,-2	.704,-2	.395,-2	.912,-2	.581,-2
19	.615,-2	.658,-2	.421,-2	.960,-2	.705,-2
20	.607,-2	.427,-2	.431,-2	.798,-2	.701,-2
21	.533,-2	.316,-2	.399,-2	.631,-2	.497,-2
22	.410,-2	.387,-2	.352,-2	.467,-2	.328,-2
23	.375,-2	.415,-2	.257,-2	.462,-2	.252,-2
24	.409,-2	.312,-2	.184,-2	.408,-2	.245,-2
25	.457,-2	.303,-2	.224,-2	.379,-2	.344,-2
26	.429,-2	.386,-2	.236,-2	.422,-2	.407,-2
27	.282,-2	.383,-2	.187,-2	.344,-2	.393,-2
28	.272,-2	.364,-2	.167,-2	.341,-2	.336,-2
29	.221,-2	.449,-2	.209,-2	.321,-2	.280,-2
30	.174,-2	.361,-2	.211,-2	.346,-2	.312,-2
31	.193,-2	.305,-2	.182,-2	.413,-2	.307,-2
32	.205,-2	.277,-2	.181,-2	.400,-2	.267,-2
33	.252,-2	.194,-2	.173,-2	.383,-2	.305,-2
34	.230,-2	.200,-2	.173,-2	.366,-2	.307,-2
35	.160,-2	.239,-2	.171,-2	.283,-2	.239,-2
36	.140,-2	.279,-2	.127,-2	.204,-2	.220,-2
37	.177,-2	.248,-2	.110,-2	.156,-2	.214,-2
38	.213,-2	.245,-2	.113,-2	.123,-2	.249,-2
39	.199,-2	.182,-2	.119,-2	.119,-2	.251,-2
40	.214,-2	.128,-2	.114,-2	.295,-2	.193,-2
41	.230,-2	.141,-2	.949,-3	.285,-2	.139,-2
42	.203,-2	.170,-2	.973,-3	.233,-2	.117,-2
43	.149,-2	.172,-2	.114,-2	.250,-2	.111,-2
44	.147,-2	.120,-2	.101,-2	.226,-2	.148,-2
45	.220,-2	.128,-2	.934,-3	.173,-2	.146,-2
46	.196,-2	.125,-2	.900,-3	.187,-2	.147,-2
47	.173,-2	.116,-2	.859,-3	.207,-2	.163,-2
48	.184,-2	.121,-2	.112,-2	.219,-2	.168,-2
49	.162,-2	.121,-2	.141,-2	.235,-2	.158,-2
50	.144,-2	.942,-3	.121,-2	.219,-2	.168,-2
51	.132,-2	.704,-3	.942,-3	.204,-2	.161,-2
52	.999,-3	.664,-3	.103,-2	.155,-2	.144,-2
53	.971,-3	.744,-3	.100,-2	.141,-2	.172,-2
54	.108,-2	.814,-3	.106,-2	.178,-2	.160,-2
55	.934,-3	.121,-2	.992,-3	.215,-2	.108,-2
56	.988,-3	.128,-2	.108,-2	.174,-2	.107,-2
57	.115,-2	.108,-2	.952,-3	.155,-2	.115,-2
58	.112,-2	.152,-2	.798,-3	.143,-2	.116,-2
59	.775,-3	.151,-2	.648,-3	.126,-2	.117,-2
60	.567,-3	.114,-2	.475,-3	.102,-2	.104,-2

Run No. 18; v component

N	Anemometer Position Number				
	1	2	3	4	5
00	.233,-1	.253,-1	.221,-1	.208,-1	.1[illegible],-1
01	.121,-1	.133,-1	.112,-1	.133,-1	.102,-1
02	.237,-2	.242,-2	.154,-2	.234,-2	.[illegible],-2
03	.173,-2	.[illegible],-2	.1[illegible],-2	.275,-2	.112,-2
04	.210,-2	.280,-2	.179,-2	.247,-2	.135,-2
05	.254,-2	.275,-2	.240,-2	.293,-2	.249,-2
06	.247,-2	.247,-2	.290,-2	.[illegible],-2	.275,-2
07	.209,-2	.260,-2	.253,-2	.293,-2	.237,-2
08	.312,-2	.[illegible],-2	.239,-2	.301,-2	.245,-2
09	.428,-2	.33[illegible],-2	.247,-2	.335,-2	.[illegible],-2
10	.314,-2	.257,-2	.237,-2	.33[illegible],-2	.180,-2
11	.211,-2	.[illegible],-2	.219,-2	.350,-2	.[illegible],-2
12	.[illegible],-2	.[illegible],-2	.140,-2	.305,-2	.207,-2
13	.309,-2	.309,-2	.140,-2	.242,-2	.[illegible],-2
14	.275,-2	.[illegible],-2	.201,-2	.247,-2	.[illegible],-2
15	.[illegible],-2	.[illegible],-2	.[illegible],-2	.308,-2	.211,-2
16	.190,-2	.[illegible],-2	.[illegible],-2	.272,-2	.[illegible],-2
17	.[illegible],-2	.177,-2	.219,-2	.[illegible],-2	.201,-2
18	.204,-2	.[illegible],-2	.234,-2	.305,-2	.190,-2
19	.240,-2	.341,-2	.260,-2	.241,-2	.15[illegible],-2
20	.235,-2	.326,-2	.[illegible],-2	.170,-2	.134,-2
21	.230,-2	.241,-2	.181,-2	.160,-2	.175,-2
22	.219,-2	.204,-2	.134,-2	.189,-2	.215,-2
23	.218,-2	.193,-2	.131,-2	.274,-2	.243,-2
24	.199,-2	.200,-2	.135,-2	.[illegible],-2	.202,-2
25	.153,-2	.189,-2	.190,-2	.256,-2	.14[illegible],-2
26	.185,-2	.176,-2	.229,-2	.310,-2	.[illegible],-2
27	.[illegible],-2	.175,-2	.171,-2	.208,-2	.131,-2
28	.186,-2	.243,-2	.155,-2	.122,-2	.947,-3
29	.171,-2	.266,-2	.162,-2	.112,-2	.89[illegible],-3
30	.193,-2	.210,-2	.152,-2	.129,-2	.120,-2
31	.217,-2	.186,-2	.152,-2	.[illegible],-2	.149,-2
32	.166,-2	.179,-2	.173,-2	.279,-2	.159,-2
33	.139,-2	.106,-2	.129,-2	.[illegible],-2	.158,-2
34	.182,-2	.175,-2	.122,-2	.181,-2	.138,-2
35	.196,-2	.200,-2	.165,-2	.146,-2	.954,-3
36	.213,-2	.226,-2	.151,-2	.125,-2	.109,-2
37	.227,-2	.187,-2	.179,-2	.115,-2	.134,-2
38	.187,-2	.136,-2	.173,-2	.120,-2	.158,-2
39	.164,-2	.111,-2	.163,-2	.116,-2	.175,-2
40	.181,-2	.180,-2	.215,-2	.110,-2	.147,-2
41	.181,-2	.210,-2	.176,-2	.126,-2	.127,-2
42	.149,-2	.180,-2	.122,-2	.167,-2	.142,-2
43	.159,-2	.158,-2	.138,-2	.170,-2	.166,-2
44	.146,-2	.149,-2	.181,-2	.145,-2	.140,-2
45	.166,-2	.175,-2	.143,-2	.124,-2	.135,-2
46	.179,-2	.179,-2	.120,-2	.158,-2	.125,-2
47	.170,-2	.155,-2	.104,-2	.134,-2	.160,-2
48	.181,-2	.142,-2	.965,-3	.152,-2	.155,-2
49	.130,-2	.154,-2	.134,-2	.163,-2	.113,-2
50	.109,-2	.131,-2	.117,-2	.126,-2	.129,-2
51	.130,-2	.137,-2	.977,-3	.122,-2	.170,-2
52	.172,-2	.204,-2	.133,-2	.127,-2	.140,-2
53	.147,-2	.220,-2	.157,-2	.116,-2	.117,-2
54	.134,-2	.152,-2	.124,-2	.129,-2	.126,-2
55	.152,-2	.145,-2	.904,-3	.133,-2	.129,-2
56	.178,-2	.131,-2	.119,-2	.138,-2	.143,-2
57	.177,-2	.107,-2	.114,-2	.143,-2	.116,-2
58	.178,-2	.123,-2	.979,-3	.130,-2	.110,-2
59	.164,-2	.130,-2	.916,-3	.117,-2	.117,-2
60	.135,-2	.105,-2	.658,-3	.103,-2	.107,-2

Run No. 18; w component

N	Anemometer Position Number 1	2	3	4	5
00	.140,-2	.151,-2	.138,-2	.115,-2	110,-2
01	.187,-2	.175,-2	.130,-2	.104,-2	.119,-2
02	.242,-2	.155,-2	.127,-2	.116,-2	.144,-2
03	.202,-2	.109,-2	.125,-2	.155,-2	.155,-2
04	.145,-2	.107,-2	.100,-2	.153,-2	.133,-2
05	.120,-2	.106,-2	.124,-2	.138,-2	.128,-2
06	.152,-2	.112,-2	.127,-2	.138,-2	.960,-3
07	.107,-2	.123,-2	.104,-2	.146,-2	.866,-3
08	.202,-2	.152,-2	.102,-2	.104,-2	.922,-3
09	.187,-2	.151,-2	.138,-2	.158,-2	.107,-2
10	.155,-2	.116,-2	.105,-2	.153,-2	.122,-2
11	.167,-2	.155,-2	.905,-3	.162,-2	.915,-3
12	.182,-2	.177,-2	.724,-3	.155,-2	.675,-3
13	.101,-2	.172,-2	.111,-2	.110,-2	.833,-3
14	.150,-2	.174,-2	.104,-2	.127,-2	.101,-2
15	.137,-2	.162,-2	.102,-2	.107,-2	.101,-2
16	.125,-2	.159,-2	.134,-2	.144,-2	.122,-2
17	.150,-2	.178,-2	.155,-2	.111,-2	.120,-2
18	.159,-2	.166,-2	.102,-2	.100,-2	.785,-3
19	.215,-2	.175,-2	.191,-2	.105,-2	.747,-3
20	.250,-2	.161,-2	.175,-2	.127,-2	.926,-3
21	.105,-2	.125,-2	.115,-2	.112,-2	.788,-3
22	.104,-2	.140,-2	.112,-2	.116,-2	.755,-3
23	.116,-2	.153,-2	.125,-2	.152,-2	.928,-3
24	.156,-2	.164,-2	.122,-2	.130,-2	.900,-3
25	.143,-2	.176,-2	.970,-3	.130,-2	.917,-3
26	.159,-2	.189,-2	.105,-2	.118,-2	.742,-3
27	.107,-2	.145,-2	.110,-2	.828,-3	.700,-3
28	.191,-2	.108,-2	.101,-2	.878,-3	.871,-3
29	.152,-2	.137,-2	.114,-2	.105,-2	.102,-2
30	.177,-2	.172,-2	.143,-2	.117,-2	.979,-3
31	.223,-2	.172,-2	.143,-2	.137,-2	.873,-3
32	.186,-2	.152,-2	.110,-2	.144,-2	.767,-3
33	.131,-2	.172,-2	.842,-3	.151,-2	.688,-3
34	.143,-2	.175,-2	.739,-3	.125,-2	.978,-3
35	.180,-2	.181,-2	.740,-3	.100,-2	.116,-2
36	.169,-2	.161,-2	.935,-3	.110,-2	.102,-2
37	.158,-2	.127,-2	.102,-2	.118,-2	.104,-2
38	.149,-2	.115,-2	.115,-2	.931,-3	.120,-2
39	.175,-2	.111,-2	.995,-3	.950,-3	.975,-3
40	.198,-2	.145,-2	.100,-2	.110,-2	.761,-3
41	.165,-2	.180,-2	.141,-2	.102,-2	.550,-3
42	.136,-2	.178,-2	.142,-2	.823,-3	.568,-3
43	.181,-2	.142,-2	.129,-2	.586,-3	.950,-3
44	.175,-2	.120,-2	.142,-2	.562,-3	.118,-2
45	.145,-2	.109,-2	.129,-2	.928,-3	.110,-2
46	.124,-2	.114,-2	.112,-2	.120,-2	.119,-2
47	.125,-2	.110,-2	.127,-2	.131,-2	.867,-3
48	.146,-2	.104,-2	.112,-2	.122,-2	.812,-3
49	.164,-2	.118,-2	.110,-2	.934,-3	.853,-3
50	.170,-2	.124,-2	.125,-2	.780,-3	.881,-3
51	.153,-2	.126,-2	.115,-2	.932,-3	.125,-2
52	.155,-2	.147,-2	.106,-2	.113,-2	.120,-2
53	.180,-2	.109,-2	.118,-2	.111,-2	.998,-3
54	.199,-2	.128,-2	.112,-2	.767,-3	.110,-2
55	.194,-2	.131,-2	.120,-2	.727,-3	.105,-2
56	.166,-2	.130,-2	.115,-2	.911,-3	.772,-3
57	.142,-2	.132,-2	.922,-3	.888,-3	.903,-3
58	.121,-2	.118,-2	.978,-3	.965,-3	.947,-3
59	.126,-2	.123,-2	.904,-3	.950,-3	.764,-3
60	.132,-2	.132,-2	.832,-3	.814,-3	.606,-3

Run No. 19; u component

N	Anemometer Position Number 1	2	3	4	5
00	.447	.611	.399	.804	.361
01	.444	.603	.394	.666	.332
02	.266	.384	.233	.269	.218
03	.117	.163	.134	.121	.141
04	.922,-1	.112	.111	.980,-1	.121
05	.721,-1	.866,-1	.869,-1	.810,-1	.941,-1
06	.623,-1	.552,-1	.709,-1	.624,-1	.702,-1
07	.534,-1	.423,-1	.456,-1	.551,-1	.463,-1
08	.376,-1	.377,-1	.350,-1	.584,-1	.395,-1
09	.321,-1	.308,-1	.397,-1	.493,-1	.376,-1
10	.341,-1	.279,-1	.325,-1	.449,-1	.339,-1
11	.317,-1	.227,-1	.251,-1	.343,-1	.278,-1
12	.222,-1	.205,-1	.191,-1	.260,-1	.319,-1
13	.155,-1	.211,-1	.159,-1	.223,-1	.282,-1
14	.172,-1	.238,-1	.168,-1	.210,-1	.184,-1
15	.185,-1	.273,-1	.220,-1	.223,-1	.157,-1
16	.187,-1	.219,-1	.214,-1	.148,-1	.132,-1
17	.152,-1	.188,-1	.155,-1	.139,-1	.159,-1
18	.101,-1	.207,-1	.157,-1	.171,-1	.173,-1
19	.974,-2	.162,-1	.174,-1	.183,-1	.105,-1
20	.109,-1	.131,-1	.122,-1	.158,-1	.101,-1
21	.991,-2	.122,-1	.983,-2	.137,-1	.119,-1
22	.774,-2	.984,-2	.120,-1	.150,-1	.109,-1
23	.683,-2	.101,-1	.113,-1	.134,-1	.120,-1
24	.907,-2	.106,-1	.813,-2	.122,-1	.115,-1
25	.104,-1	.112,-1	.958,-2	.139,-1	.939,-2
26	.835,-2	.114,-1	.101,-1	.126,-1	.904,-2
27	.634, 2	.104,-1	.741,-2	.102,-1	.870,-2
28	.590.-2	.850,-2	.624,-2	.102,-1	.806,-2
29	.730,-2	.970,-2	.749,-2	.926,-2	.805,-2
30	.102,-1	.118,-1	.808,-2	.103,-1	.855,-2
31	.921,-2	.984,-2	.679,-2	.829,-2	.665,-2
32	.701,-2	.697,-2	.537,-2	.641,-2	.573,-2
33	.731,-2	.569,-2	.565,-2	.540,-2	.656,-2
34	.677,-2	.555,-2	.653,-2	.550,-2	.708,-2
35	.475,-2	.533,-2	.610,-2	.472,-2	.644,-2
36	.464,-2	.560,-2	.506,-2	.335,-2	.635,-2
37	.515,-2	.594,-2	.378,-2	.345,-2	.644,-2
38	.480,-2	.655,-2	.405,-2	.520,-2	.481,-2
39	.510,-2	.651,-2	.417,-2	.714,-2	.436,-2
40	.451,-2	.559,-2	.432,-2	.667,-2	.384,-2
41	.558,-2	.552,-2	.359,-2	.531,-2	.350,-2
42	.661,-2	.509,-2	.295,-2	.586,-2	.346,-2
43	.702,-2	.313,-2	.362,-2	.573,-2	.397,-2
44	.834,-2	.291,-2	.521,-2	.587,-2	.377,-2
45	.738,-2	.424,-2	.532,-2	.529,-2	.397,-2
46	.570,-2	.458,-2	.445,-2	.454,-2	.,-2
47	.492,-2	.458,-2	.339,-2	.506,-2	.283,-2
48	.443,-2	.404,-2	.250,-2	.593,-2	.279,-2
49	.458,-2	.361,-2	.321,-2	.642,-2	.347,-2
50	.392,-2	.423,-2	.330,-2	.622,-2	.359,-2
51	.395,-2	.456,-2	.336,-2	.529,-2	.337,-2
52	.411,-2	.485,-2	.345,-2	.424,-2	.317,-2
53	.496,-2	.430,-2	.303,-2	.529,-2	.320,-2
54	.599.-2	.402.-2	.344.-2	.588,-2	.356.-2
55	.539,-2	.345,-2	.342,-2	.483,-2	.367,-2
56	.489,-2	.419,-2	.386,-2	.431,-2	.352,-2
57	.565,-2	.402,-2	.357,-2	.396,-2	.316,-2
58	.491,-2	.330,-2	.223,-2	.420,-2	.280,-2
59	.312,-2	.317,-2	.205,-2	.471,-2	.177,-2
60	.229,-2	.283,-2	.214,-2	.410,-2	.135,-2

Run No. 19; v component

	Anemometer Position Number				
N	1	2	3	4	5
00	.397	.453	.486	.760	.462
01	.327	.362	.361	.509	.353
02	.198	.207	.184	.170	.160
03	.857,-1	.972,-1	.103	.762,-1	.739,-1
04	.409,-1	.498,-1	.582,-1	.588,-1	.469,-1
05	.321,-1	.406,-1	.267,-1	.339,-1	.274,-1
06	.282,-1	.389,-1	.212,-1	.222,-1	.221,-1
07	.199,-1	.247,-1	.233,-1	.263,-1	.220,-1
08	.180,-1	.158,-1	.197,-1	.246,-1	.223,-1
09	.174,-1	.156,-1	.202,-1	.207,-1	.217,-1
10	.132,-1	.178,-1	.159,-1	.175,-1	.145,-1
11	.111,-1	.184,-1	.852,-2	.130,-1	.997,-2
12	.136,-1	.149,-1	.658,-2	.123,-1	.112,-1
13	.141,-1	.995,-2	.662,-2	.136,-1	.134,-1
14	.108,-1	.936,-2	.738,-2	.145,-1	.153,-1
15	.748,-2	.129,-1	.779,-2	.152,-1	.118,-1
16	.566,-2	.136,-1	.108,-1	.117,-1	.688,-2
17	.611,-2	.114,-1	.128,-1	.710,-2	.698,-2
18	.813,-2	.904,-2	.123,-1	.628,-2	.791,-2
19	.851,-2	.778,-2	.114,-1	.743,-2	.697,-2
20	.837,-2	.720,-2	.702,-2	.780,-2	.739,-2
21	.907,-2	.643,-2	.543,-2	.697,-2	.819,-2
22	.922,-2	.668,-2	.497,-2	.658,-2	.585,-2
23	.764,-2	.752,-2	.350,-2	.571,-2	.470,-2
24	.729,-2	.836,-2	.341,-2	.677,-2	.533,-2
25	.780,-2	.583,-2	.391,-2	.639,-2	.421,-2
26	.608,-2	.427,-2	.435,-2	.626,-2	.405,-2
27	.553,-2	.625,-2	.457,-2	.529,-2	.572,-2
28	.465,-2	.822,-2	.607,-2	.328,-2	.649,-2
29	.464,-2	.742,-2	.695,-2	.341,-2	.476,-2
30	.586,-2	.631,-2	.660,-2	.589,-2	.365,-2
31	.529,-2	.497,-2	.587,-2	.680,-2	.380,-2
32	.442,-2	.456,-2	.462,-2	.439,-2	.432,-2
33	.401,-2	.567,-2	.382,-2	.466,-2	.460,-2
34	.517,-2	.572,-2	.321,-2	.414,-2	.482,-2
35	.746,-2	.484,-2	.293,-2	.330,-2	.468,-2
36	.713,-2	.397,-2	.347,-2	.370,-2	.419,-2
37	.725,-2	.435,-2	.373,-2	.437,-2	.344,-2
38	.734,-2	.474,-2	.471,-2	.461,-2	.320,-2
39	.750,-2	.406,-2	.467,-2	.426,-2	.411,-2
40	.802,-2	.398,-2	.370,-2	.451,-2	.507,-2
41	.736,-2	.426,-2	.312,-2	.409,-2	.438,-2
42	.674,-2	.434,-2	.329,-2	.294,-2	.269,-2
43	.555,-2	.497,-2	.327,-2	.291,-2	.251,-2
44	.538,-2	.569,-2	.384,-2	.360,-2	.379,-2
45	.455,-2	.558,-2	.390,-2	.385,-2	.695,-2
46	.420,-2	.561,-2	.301,-2	.431,-2	.651,-2
47	.516,-2	.578,-2	.277,-2	.589,-2	.452,-2
48	.422,-2	.569,-2	.302,-2	.566,-2	.391,-2
49	.373,-2	.498,-2	.312,-2	.384,-2	.243,-2
50	.461,-2	.415,-2	.430,-2	.332,-2	.236,-2
51	.542,-2	.424,-2	.470,-2	.430,-2	.374,-2
52	.561,-2	.531,-2	.524,-2	.482,-2	.334,-2
53	.525,-2	.566,-2	.465,-2	.414,-2	.277,-2
54	.675,-2	.441,-2	.374,-2	.346,-2	.284,-2
55	.653,-2	.523,-2	.329,-2	.363,-2	.284,-2
56	.489,-2	.557,-2	.333,-2	.329,-2	.321,-2
57	.447,-2	.532,-2	.362,-2	.286,-2	.382,-2
58	.346,-2	.435,-2	.314,-2	.369,-2	.385,-2
59	.277,-2	.335,-2	.281,-2	.331,-2	.27?,-2
60	.209,-2	.305,-2	.256,-2	.243,-2	.182,-2

Run No. 19; v component

N	Anemometer Position Number 1	2	3	4	5
00	.599,-2	.560,-2	.317,-2	.347,-2	.378,-2
01	.642,-2	.699,-2	.424,-2	.396,-2	.390,-2
02	.642,-2	.872,-2	.513,-2	.432,-2	.370,-2
03	.707,-2	.856,-2	.509,-2	.470,-2	.302,-2
04	.829,-2	.636,-2	.537,-2	.505,-2	.288,-2
05	.930,-2	.570,-2	.572,-2	.394,-2	.274,-2
06	.878,-2	.609,-2	.545,-2	.299,-2	.291,-2
07	.753,-2	.644,-2	.507,-2	.322,-2	.327,-2
08	.626,-2	.649,-2	.436,-2	.484,-2	.316,-2
09	.479,-2	.579,-2	.356,-2	.639,-2	.377,-2
10	.402,-2	.506,-2	.423,-2	.683,-2	.425,-2
11	.406,-2	.386,-2	.598,-2	.477,-2	.306,-2
12	.418,-2	.431,-2	.670,-2	.298,-2	.223,-2
13	.452,-2	.497,-2	.491,-2	.297,-2	.245,-2
14	.534,-2	.910,-2	.374,-2	.327,-2	.257,-2
15	.426,-2	.937,-2	.374,-2	.386,-2	.256,-2
16	.354,-2	.537,-2	.391,-2	.311,-2	.269,-2
17	.414,-2	.464,-2	.362,-2	.305,-2	.222,-2
18	.524,-2	.410,-2	.309,-2	.335,-2	.264,-2
19	.524,-2	.380,-2	.270,-2	.354,-2	.275,-2
20	.411,-2	.396,-2	.241,-2	.368,-2	.212,-2
21	.376,-2	.372,-2	.282,-2	.358,-2	.224,-2
22	.327,-2	.348,-2	.288,-2	.316,-2	.228,-2
23	.379,-2	.439,-2	.306,-2	.305,-2	.213,-2
24	.410,-2	.574,-2	.249,-2	.426,-2	.204,-2
25	.403,-2	.600,-2	.219,-2	.458,-2	.201,-2
26	.379,-2	.579,-2	.278,-2	.362,-2	.226,-2
27	.504,-2	.468,-2	.361,-2	.231,-2	.242,-2
28	.538,-2	.677,-2	.348,-2	.194,-2	.219,-2
29	.485,-2	.795,-2	.277,-2	.274,-2	.221,-2
30	.483,-2	.598,-2	.242,-2	.287,-2	.215,-2
31	.376,-2	.484,-2	.254,-2	.212,-2	.164,-2
32	.456,-2	.350,-2	.284,-2	.239,-2	.146,-2
33	.587,-2	.388,-2	.306,-2	.258,-2	.199,-2
34	.475,-2	.408,-2	.278,-2	.271,-2	.235,-2
35	.380,-2	.289,-2	.296,-2	.274,-2	.206,-2
36	.336,-2	.332,-2	.276,-2	.283,-2	.169,-2
37	.293,-2	.532,-2	.253,-2	.359,-2	.149,-2
38	.379,-2	.575,-2	.273,-2	.350,-2	.178,-2
39	.425,-2	.429,-2	.272,-2	.279,-2	.245,-2
40	.521,-2	.463,-2	.281,-2	.280,-2	.279,-2
41	.521,-2	.729,-2	.268,-2	.288,-2	.287,-2
42	.427,-2	.687,-2	.298,-2	.371,-2	.257,-2
43	.455,-2	.543,-2	.311,-2	.353,-2	.210,-2
44	.454,-2	.446,-2	.325,-2	.299,-2	.247,-2
45	.489,-2	.438,-2	.325,-2	.318,-2	.254,-2
46	.396,-2	.427,-2	.344,-2	.371,-2	.190,-2
47	.376,-2	.382,-2	.319,-2	.392,-2	.134,-2
48	.375,-2	.481,-2	.239,-2	.345,-2	.116,-2
49	.337,-2	.591,-2	.212,-2	.284,-2	.136,-2
50	.357,-2	.496,-2	.294,-2	.233,-2	.154,-2
51	.377,-2	.525,-2	.382,-2	.249,-2	.176,-2
52	.343,-2	.578,-2	.381,-2	.248,-2	.170,-2
53	.376,-2	.421,-2	.311,-2	.230,-2	.138,-2
54	.425,-2	.397,-2	.295,-2	.246,-2	.159,-2
55	.457,-2	.500,-2	.276,-2	.294,-2	.169,-2
56	.451,-2	.527,-2	.258,-2	.306,-2	.167,-2
57	.468,-2	.428,-2	.231,-2	.299,-2	.225,-2
58	.472,-2	.457,-2	.216,-2	.321,-2	.229,-2
59	.404,-2	.496,-2	.244,-2	.303,-2	.185,-2
60	.395,-2	.395,-2	.249,-2	.255,-2	.154,-2

Run No. 21; u component

N	Anemometer Position Number 1	2	3	4	5
00	.481	.441	.345	.488	.359
01	.307	.309	.258	.333	.261
02	.983,-1	.129	.142	.175	.153
03	.590,-1	.703,-1	.832,-1	.103	.113
04	.519,-1	.505,-1	.521,-1	.650,-1	.693,-1
05	.437,-1	.426,-1	.408,-1	.665,-1	.527,-1
06	.532,-1	.487,-1	.400,-1	.668,-1	.521,-1
07	.476,-1	.421,-1	.307,-1	.579,-1	.405,-1
08	.333,-1	.335,-1	.256,-1	.482,-1	.303,-1
09	.240,-1	.278,-1	.217,-1	.334,-1	.305,-1
10	.202,-1	.224,-1	.225,-1	.308,-1	.218,-1
11	.167,-1	.185,-1	.243,-1	.207,-1	.173,-1
12	.148,-1	.197,-1	.233,-1	.239,-1	.222,-1
13	.152,-1	.161,-1	.193,-1	.196,-1	.214,-1
14	.158,-1	.128,-1	.162,-1	.165,-1	.190,-1
15	.174,-1	.137,-1	.130,-1	.190,-1	.145,-1
16	.150,-1	.137,-1	.110,-1	.191,-1	.114,-1
17	.129,-1	.147,-1	.155,-1	.154,-1	.100,-1
18	.127,-1	.155,-1	.157,-1	.134,-1	.970,-2
19	.124,-1	.146,-1	.136,-1	.116,-1	.109,-1
20	.114,-1	.893,-2	.971,-2	.117,-1	.928,-2
21	.108,-1	.109,-1	.692,-2	.129,-1	.810,-2
22	.125,-1	.142,-1	.789,-2	.110,-1	.867,-2
23	.103,-1	.102,-1	.704,-2	.711,-2	.116,-1
24	.757,-2	.900,-2	.718,-2	.643,-2	.111,-1
25	.642,-2	.740,-2	.864,-2	.773,-2	.789,-2
26	.805,-2	.620,-2	.778,-2	.855,-2	.843,-2
27	.905,-2	.756,-2	.766,-2	.105,-1	.811,-2
28	.704,-2	.790,-2	.770,-2	.961,-2	.559,-2
29	.518,-2	.759,-2	.784,-2	.808,-2	.595,-2
30	.376,-2	.693,-2	.808,-2	.709,-2	.596,-2
31	.411,-2	.527,-2	.684,-2	.734,-2	.543,-2
32	.396,-2	.529,-2	.466,-2	.615,-2	.451,-2
33	.431,-2	.544,-2	.506,-2	.574,-2	.510,-2
34	.468,-2	.437,-2	.606,-2	.487,-2	.571,-2
35	.475,-2	.431,-2	.384,-2	.500,-2	.556,-2
36	.456,-2	.395,-2	.268,-2	.608,-2	.533,-2
37	.528,-2	.302,-2	.464,-2	.637,-2	.780,-2
38	.510,-2	.397,-2	.633,-2	.673,-2	.101,-1
39	.383,-2	.503,-2	.428,-2	.694,-2	.803,-2
40	.374,-2	.456,-2	.353,-2	.553,-2	.615,-2
41	.433,-2	.464,-2	.402,-2	.586,-2	.469,-2
42	.367,-2	.406,-2	.370,-2	.419,-2	.578,-2
43	.281,-2	.294,-2	.404,-2	.475,-2	.573,-2
44	.275,-2	.207,-2	.421,-2	.487,-2	.410,-2
45	.299,-2	.371,-2	.339,-2	.437,-2	.295,-2
46	.272,-2	.423,-2	.360,-2	.447,-2	.216,-2
47	.249,-2	.339,-2	.330,-2	.516,-2	.214,-2
48	.214,-2	.261,-2	.250,-2	.621,-2	.248,-2
49	.319,-2	.223,-2	.260,-2	.631,-2	.248,-2
50	.405,-2	.262,-2	.317,-2	.485,-2	.343,-2
51	.432,-2	.292,-2	.309,-2	.362,-2	.397,-2
52	.382,-2	.301,-2	.419,-2	.289,-2	.571,-2
53	.368,-2	.358,-2	.416,-2	.307,-2	.408,-2
54	.356,-2	.386,-2	.304,-2	.355,-2	.322,-2
55	.389,-2	.391,-2	.310,-2	.371,-2	.222,-2
56	.371,-2	.429,-2	.340,-2	.401,-2	.229,-2
57	.411,-2	.442,-2	.291,-2	.506,-2	.250,-2
58	.384,-2	.298,-2	.257,-2	.515,-2	.344,-2
59	.258,-2	.220,-2	.227,-2	.293,-2	.359,-2
60	.197,-2	.258,-2	.217,-2	.160,-2	.257,-2

Run No. 21; v component

	Accelerometer Position Number				
N	1	2	3	4	5
00	.541,-1	.501,-1	.583,-1	.672,-1	.817,-1
01	.391,-1	.404,-1	.396,-1	.435,-1	.502,-1
02	.241,-1	.255,-1	.240,-1	.215,-1	.206,-1
03	.186,-1	.195,-1	.190,-1	.163,-1	.150,-1
04	.178,-1	.158,-1	.175,-1	.174,-1	.110,-1
05	.173,-1	.144,-1	.191,-1	.200,-1	.113,-1
06	.147,-1	.136,-1	.157,-1	.136,-1	.134,-1
07	.128,-1	.130,-1	.129,-1	.971,-2	.844,-2
08	.126,-1	.111,-1	.125,-1	.110,-1	.756,-2
09	.105,-1	.868,-2	.915,-2	.985,-2	.809,-2
10	.106,-1	.982,-2	.874,-2	.101,-1	.841,-2
11	.915,-2	.110,-1	.928,-2	.129,-1	.993,-2
12	.695,-2	.966,-2	.774,-2	.114,-1	.771,-2
13	.908,-2	.975,-2	.787,-2	.821,-2	.638,-2
14	.957,-2	.944,-2	.751,-2	.998,-2	.726,-2
15	.746,-2	.646,-2	.508,-2	.541,-2	.549,-2
16	.558,-2	.695,-2	.717,-2	.559,-2	.482,-2
17	.619,-2	.670,-2	.454,-2	.680,-2	.610,-2
18	.648,-2	.578,-2	.669,-2	.774,-2	.506,-2
19	.558,-2	.661,-2	.707,-2	.708,-2	.458,-2
20	.598,-2	.641,-2	.773,-2	.677,-2	.514,-2
21	.440,-2	.606,-2	.785,-2	.654,-2	.632,-2
22	.356,-2	.688,-2	.684,-2	.644,-2	.756,-2
23	.559,-2	.719,-2	.568,-2	.459,-2	.697,-2
24	.704,-2	.702,-2	.408,-2	.798,-2	.491,-2
25	.582,-2	.590,-2	.590,-2	.580,-2	.504,-2
26	.361,-2	.509,-2	.497,-2	.588,-2	.504,-2
27	.419,-2	.581,-2	.498,-2	.580,-2	.375,-2
28	.429,-2	.587,-2	.541,-2	.605,-2	.310,-2
29	.397,-2	.550,-2	.485,-2	.573,-2	.305,-2
30	.405,-2	.571,-2	.566,-2	.539,-2	.505,-2
31	.393,-2	.576,-2	.505,-2	.479,-2	.467,-2
32	.444,-2	.562,-2	.473,-2	.540,-2	.506,-2
33	.476,-2	.519,-2	.590,-2	.598,-2	.435,-2
34	.489,-2	.372,-2	.502,-2	.418,-2	.413,-2
35	.345,-2	.297,-2	.338,-2	.432,-2	.344,-2
36	.297,-2	.377,-2	.429,-2	.369,-2	.423,-2
37	.416,-2	.471,-2	.350,-2	.394,-2	.371,-2
38	.485,-2	.431,-2	.548,-2	.437,-2	.332,-2
39	.469,-2	.341,-2	.474,-2	.532,-2	.347,-2
40	.467,-2	.420,-2	.484,-2	.440,-2	.377,-2
41	.368,-2	.397,-2	.430,-2	.399,-2	.362,-2
42	.344,-2	.581,-2	.528,-2	.320,-2	.337,-2
43	.378,-2	.466,-2	.617,-2	.356,-2	.374,-2
44	.382,-2	.516,-2	.623,-2	.402,-2	.387,-2
45	.435,-2	.431,-2	.497,-2	.385,-2	.371,-2
46	.342,-2	.363,-2	.370,-2	.342,-2	.326,-2
47	.289,-2	.485,-2	.304,-2	.388,-2	.284,-2
48	.335,-2	.347,-2	.309,-2	.435,-2	.251,-2
49	.313,-2	.397,-2	.313,-2	.444,-2	.288,-2
50	.301,-2	.456,-2	.300,-2	.379,-2	.273,-2
51	.333,-2	.364,-2	.333,-2	.354,-2	.268,-2
52	.337,-2	.419,-2	.333,-2	.325,-2	.240,-2
53	.300,-2	.518,-2	.304,-2	.331,-2	.261,-2
54	.376,-2	.517,-2	.383,-2	.407,-2	.297,-2
55	.465,-2	.499,-2	.479,-2	.339,-2	.301,-2
56	.445,-2	.472,-2	.396,-2	.363,-2	.333,-2
57	.348,-2	.445,-2	.336,-2	.464,-2	.311,-2
58	.298,-2	.497,-2	.318,-2	.378,-2	.264,-2
59	.298,-2	.419,-2	.253,-2	.225,-2	.229,-2
60	.270,-2	.290,-2	.200,-2	.185,-2	.205,-2

Run No. 21; v component

	Anemometer Position Number				
N	1	2	3	4	5
00	.465,-2	.428,-2	.396,-2	.221,-2	.288,-2
01	.471,-2	.436,-2	.376,-2	.242,-2	.408,-2
02	.440,-2	.442,-2	.301,-2	.268,-2	.445,-2
03	.475,-2	.601,-2	.304,-2	.302,-2	.312,-2
04	.427,-2	.722,-2	.390,-2	.314,-2	.274,-2
05	.380,-2	.699,-2	.435,-2	.281,-2	.300,-2
06	.555,-2	.534,-2	.459,-2	.302,-2	.295,-2
07	.478,-2	.552,-2	.413,-2	.421,-2	.195,-2
08	.307,-2	.493,-2	.366,-2	.405,-2	.201,-2
09	.308,-2	.427,-2	.353,-2	.325,-2	.241,-2
10	.373,-2	.360,-2	.364,-2	.282,-2	.286,-2
11	.378,-2	.366,-2	.493,-2	.294,-2	.281,-2
12	.359,-2	.404,-2	.541,-2	.339,-2	.212,-2
13	.381,-2	.349,-2	.484,-2	.384,-2	.247,-2
14	.400,-2	.369,-2	.418,-2	.339,-2	.349,-2
15	.474,-2	.449,-2	.435,-2	.315,-2	.280,-2
16	.468,-2	.573,-2	.414,-2	.329,-2	.259,-2
17	.418,-2	.516,-2	.392,-2	.280,-2	.289,-2
18	.451,-2	.529,-2	.336,-2	.321,-2	.251,-2
19	.481,-2	.737,-2	.335,-2	.376,-2	.236,-2
20	.459,-2	.726,-2	.372,-2	.262,-2	.301,-2
21	.411,-2	.490,-2	.337,-2	.228,-2	.310,-2
22	.377,-2	.464,-2	.325,-2	.281,-2	.327,-2
23	.368,-2	.526,-2	.313,-2	.224,-2	.363,-2
24	.401,-2	.379,-2	.307,-2	.222,-2	.302,-2
25	.447,-2	.328,-2	.327,-2	.282,-2	.223,-2
26	.403,-2	.483,-2	.302,-2	.307,-2	.275,-2
27	.374,-2	.641,-2	.284,-2	.265,-2	.340,-2
28	.320,-2	.505,-2	.308,-2	.229,-2	.281,-2
29	.316,-2	.320,-2	.332,-2	.187,-2	.246,-2
30	.350,-2	.302,-2	.341,-2	.195,-2	.266,-2
31	.285,-2	.266,-2	.247,-2	.216,-2	.262,-2
32	.252,-2	.314,-2	.191,-2	.199,-2	.228,-2
33	.302,-2	.415,-2	.174,-2	.257,-2	.267,-2
34	.299,-2	.500,-2	.202,-2	.297,-2	.302,-2
35	.341,-2	.485,-2	.241,-2	.267,-2	.226,-2
36	.413,-2	.352,-2	.222,-2	.239,-2	.166,-2
37	.413,-2	.307,-2	.188,-2	.251,-2	.396,-2
38	.447,-2	.327,-2	.265,-2	.267,-2	.635,-2
39	.505,-2	.306,-2	.342,-2	.227,-2	.431,-2
40	.436,-2	.302,-2	.472,-2	.176,-2	.238,-2
41	.283,-2	.282,-2	.474,-2	.150,-2	.207,-2
42	.244,-2	.302,-2	.348,-2	.178,-2	.207,-2
43	.309,-2	.318,-2	.350,-2	.247,-2	.235,-2
44	.301,-2	.275,-2	.313,-2	.275,-2	.221,-2
45	.439,-2	.314,-2	.233,-2	.207,-2	.213,-2
46	.458,-2	.395,-2	.290,-2	.176,-2	.212,-2
47	.390,-2	.508,-2	.332,-2	.219,-2	.201,-2
48	.380,-2	.478,-2	.276,-2	.257,-2	.195,-2
49	.369,-2	.425,-2	.265,-2	.259,-2	.246,-2
50	.455,-2	.366,-2	.343,-2	.267,-2	.291,-2
51	.605,-2	.379,-2	.349,-2	.256,-2	.226,-2
52	.472,-2	.425,-2	.315,-2	.238,-2	.204,-2
53	.446,-2	.388,-2	.343,-2	.233,-2	.268,-2
54	.619,-2	.376,-2	.384,-2	.207,-2	.285,-2
55	.550,-2	.417,-2	.425,-2	.212,-2	.311,-2
56	.335,-2	.557,-2	.395,-2	.196,-2	.271,-2
57	.272,-2	.661,-2	.335,-2	.230,-2	.209,-2
58	.297,-2	.780,-2	.338,-2	.256,-2	.237,-2
59	.346,-2	.657,-2	.354,-2	.176,-2	.254,-2
60	.337,-2	.457,-2	.317,-2	.118,-2	.211,-2

Run No. 22; u component

	Anemometer Position Number				
N	1	2	3	4	5
00			.245		
01			.255		
02			.181		
03			.892,-1		
04			.742,-1		
05			.769,-1		
06			.494,-1		
07			.428,-1		
08			.393,-1		
09			.328,-1		
10			.254,-1		
11			.210,-1		
12			.263,-1		
13			.215,-1		
14			.150,-1		
15			.144,-1		
16			.186,-1		
17			.157,-1		
18			.145,-1		
19			.167,-1		
20			.144,-1		
21			.126,-1		
22			.117,-1		
23			.999,-2		
24			.110,-1		
25			.120,-1		
26			.113,-1		
27			.127,-1		
28			.120,-1		
29			.100,-1		
30			.721,-2		
31			.638,-2		
32			.728,-2		
33			.809,-2		
34			.947,-2		
35			.110,-1		
36			.898,-2		
37			.622,-2		
38			.752,-2		
39			.708,-2		
40			.540,-2		
41			.605,-2		
42			.406,-2		
43			.433,-2		
44			.522,-2		
45			.618,-2		
46			.706,-2		
47			.728,-2		
48			.617,-2		
49			.559,-2		
50			.515,-2		
51			.413,-2		
52			.547,-2		
53			.764,-2		
54			.751,-2		
55			.722,-2		
56			.618,-2		
57			.538,-2		
58			.470,-2		
59			.412,-2		
60			.414,-2		

Run No. 22; v component

N	Anemometer Position Number 1	2	3	4	5
00			.354,-1		
01			.320,-1		
02			.280,-1		
03			.217,-1		
04			.1[illegible],-1		
05			.141,-1		
06			.161,-1		
07			.173,-1		
08			.170,-1		
09			.137,-1		
10			.124,-1		
11			.141,-1		
12			.146,-1		
13			.140,-1		
14			.127,-1		
15			.150,-1		
16			.123,-1		
17			.959,-2		
18			.104,-1		
19			.059,-2		
20			.061,-2		
21			.[illegible]15,-2		
22			.071,-2		
23			.[illegible]44,-2		
24			.[illegible]07,-2		
25			.504,-2		
26			.670,-2		
27			.742,-2		
28			.560,-2		
29			.[illegible]90,-2		
30			.697,-2		
31			.650,-2		
32			.[illegible]23,-2		
33			.557,-2		
34			.624,-2		
35			.644,-2		
36			.611,-2		
37			.[illegible]01,-2		
38			.611,-2		
39			.617,-2		
40			.709,-2		
41			.665,-2		
42			.626,-2		
43			.714,-2		
44			.732,-2		
45			.616,-2		
46			.688,-2		
47			.434,-2		
48			.358,-2		
49			.456,-2		
50			.566,-2		
51			.559,-2		
52			.599,-2		
53			.548,-2		
54			.516,-2		
55			.454,-2		
56			.359,-2		
57			.459,-2		
58			.596,-2		
59			.405,-2		
60			.261,-2		



Run No. 22; w component

N	Anemometer Position Number 1	2	3	4	5
00			.469,-2		
01			.619,-2		
02			.690,-2		
03			.601,-2		
04			.498,-2		
05			.512,-2		
06			.524,-2		
07			.543,-2		
08			.550,-2		
09			.524,-2		
10			.475,-2		
11			.476,-2		
12			.504,-2		
13			.559,-2		
14			.405,-2		
15			.435,-2		
16			.402,-2		
17			.470,-2		
18			.359,-2		
19			.287,-2		
20			.292,-2		
21			.275,-2		
22			.340,-2		
23			.382,-2		
24			.419,-2		
25			.342,-2		
26			.432,-2		
27			.490,-2		
28			.417,-2		
29			.485,-2		
30			.505,-2		
31			.511,-2		
32			.399,-2		
33			.395,-2		
34			.539,-2		
35			.487,-2		
36			.504,-2		
37			.427,-2		
38			.466,-2		
39			.416,-2		
40			.570,-2		
41			.879,-2		
42			.618,-2		
43			.345,-2		
44			.340,-2		
45			.416,-2		
46			.472,-2		
47			.502,-2		
48			.432,-2		
49			.474,-2		
50			.406,-2		
51			.306,-2		
52			.341,-2		
53			.422,-2		
54			.438,-2		
55			.447,-2		
56			.463,-2		
57			.435,-2		
58			.331,-2		
59			.286,-2		
60			.298,-2		

Run No. 23; u component

N	Anemometer Position Number 1	2	3	4	5
00	.252	.222	.179	.311	.188
01	.227	.195	.169	.293	.181
02	.117	.117	.119	.249	.151
03	.611,-1	.682,-1	.774,-1	.191	.111
04	.669,-1	.485,-1	.462,-1	.146	.750,-1
05	.737,-1	.384,-1	.324,-1	.103	.675,-1
06	.567,-1	.288,-1	.355,-1	.809,-1	.615,-1
07	.377,-1	.379,-1	.284,-1	.634,-1	.503,-1
08	.291,-1	.393,-1	.252,-1	.329,-1	.417,-1
09	.226,-1	.237,-1	.234,-1	.306,-1	.345,-1
10	.192,-1	.187,-1	.174,-1	.397,-1	.317,-1
11	.234,-1	.209,-1	.133,-1	.416,-1	.406,-1
12	.225,-1	.155,-1	.150,-1	.325,-1	.336,-1
13	.183,-1	.123,-1	.136,-1	.221,-1	.228,-1
14	.153,-1	.135,-1	.111,-1	.240,-1	.275,-1
15	.154,-1	.129,-1	.113,-1	.299,-1	.325,-1
16	.191,-1	.135,-1	.115,-1	.265,-1	.294,-1
17	.195,-1	.139,-1	.106,-1	.174,-1	.212,-1
18	.150,-1	.161,-1	.151,-1	.178,-1	.187,-1
19	.105,-1	.178,-1	.165,-1	.207,-1	.185,-1
20	.682,-2	.166,-1	.103,-1	.172,-1	.140,-1
21	.982,-2	.168,-1	.803,-2	.158,-1	.118,-1
22	.968,-2	.142,-1	.791,-2	.157,-1	.928,-2
23	.743,-2	.105,-1	.667,-2	.151,-1	.898,-2
24	.613,-2	.847,-2	.649,-2	.162,-1	.103,-1
25	.675,-2	.755,-2	.687,-2	.131,-1	.985,-2
26	.650,-2	.580,-2	.821,-2	.942,-2	.110,-1
27	.662,-2	.541,-2	.919,-2	.935,-2	.111,-1
28	.596,-2	.644,-2	.787,-2	.955,-2	.122,-1
29	.486,-2	.660,-2	.739,-2	.944,-2	.131,-1
30	.577,-2	.594,-2	.621,-2	.902,-2	.118,-1
31	.680,-2	.674,-2	.494,-2	.109,-1	.752,-2
32	.575,-2	.804,-2	.422,-2	.120,-1	.618,-2
33	.657,-2	.748,-2	.562,-2	.997,-2	.729,-2
34	.676,-2	.572,-2	.819,-2	.815,-2	.729,-2
35	.604,-2	.518,-2	.691,-2	.628,-2	.588,-2
36	.638,-2	.548,-2	.415,-2	.500,-2	.501,-2
37	.788,-2	.472,-2	.426,-2	.520,-2	.734,-2
38	.631,-2	.441,-2	.458,-2	.543,-2	.980,-2
39	.491,-2	.500,-2	.360,-2	.449,-2	.664,-2
40	.460,-2	.586,-2	.343,-2	.531,-2	.479,-2
41	.428,-2	.544,-2	.349,-2	.488,-2	.635,-2
42	.479,-2	.431,-2	.410,-2	.446,-2	.718,-2
43	.417,-2	.382,-2	.381,-2	.528,-2	.541,-2
44	.393,-2	.476,-2	.385,-2	.523,-2	.512,-2
45	.356,-2	.536,-2	.489,-2	.524,-2	.506,-2
46	.327,-2	.498,-2	.475,-2	.575,-2	.504,-2
47	.361,-2	.392,-2	.415,-2	.546,-2	.442,-2
48	.506,-2	.357,-2	.334,-2	.525,-2	.359,-2
49	.540,-2	.433,-2	.363,-2	.614,-2	.279,-2
50	.464,-2	.576,-2	.440,-2	.557,-2	.374,-2
51	.398,-2	.612,-2	.311,-2	.465,-2	.473,-2
52	.398,-2	.492,-2	.207,-2	.509,-2	.541,-2
53	.327,-2	.428,-2	.283,-2	.485,-2	.666,-2
54	.268,-2	.346,-2	.400,-2	.419,-2	.614,-2
55	.313,-2	.313,-2	.368,-2	.475,-2	.417,-2
56	.311,-2	.366,-2	.327,-2	.473,-2	.433,-2
57	.311,-2	.275,-2	.303,-2	.528,-2	.515,-2
58	.303,-2	.255,-2	.295,-2	.666,-2	.560,-2
59	.292,-2	.251,-2	.282,-2	.495,-2	.554,-2
60	.239,-2	.192,-2	.255,-2	.335,-2	.505,-2

Run No. 251 v component

N	Anemometer Position Number 1	2	3	4	5
00	.338,-1	.302,-1	.301,-1	.607,-1	.348,-1
01	.321,-1	.301,-1	.258,-1	.574,-1	.313,-1
02	.489,-1	.313,-1	.194,-1	.414,-1	.278,-1
03	.372,-1	.285,-1	.148,-1	.209,-1	.278,-1
04	.212,-1	.225,-1	.141,-1	.279,-1	.226,-1
05	.158,-1	.147,-1	.132,-1	.280,-1	175,-1
06	.138,-1	.118,-1	.122,-1	.287,-1	.148,-1
07	.148,-1	.133,-1	.128,-1	.236,-1	.140,-1
08	.136,-1	.120,-1	.131,-1	.186,-1	.100,-1
09	.110,-1	.991,-2	.983,-2	.217,-1	.110,-1
10	.950,-2	.809,-2	.903,-2	.187,-1	.140,-1
11	.100,-1	.789,-2	.801,-2	.137,-1	.109,-1
12	.105,-1	.101,-1	.681,-2	.115,-1	.101,-1
13	.804,-2	.114,-1	.745,-2	.122,-1	.121,-1
14	.756,-2	.966,-2	.873,-2	.133,-1	.992,-2
15	.777,-2	.841,-2	.817,-2	.143,-1	.969,-2
16	.823,-2	.805,-2	.581,-2	.137,-1	.927,-2
17	.945,-2	.765,-2	.506,-2	.124,-1	.702,-2
18	.836,-2	.609,-2	.444,-2	.101,-1	.546,-2
19	.731,-2	.572,-2	.389,-2	.722,-2	.709,-2
20	.555,-2	.614,-2	.575,-2	.676,-2	.840,-2
21	.991,-2	.567,-2	.507,-2	.651,-2	.701,-2
22	.520,-2	.616,-2	.425,-2	.800,-2	.722,-2
23	.508,-2	.543,-2	.496,-2	.746,-2	.708,-2
24	.660,-2	.629,-2	.550,-2	.536,-2	.674,-2
25	.517,-2	.801,-2	.745,-2	.606,-2	.767,-2
26	.508,-2	.774,-2	.100,-1	.751,-2	.765,-2
27	.980,-2	.613,-2	.767,-2	.768,-2	.587,-2
28	.574,-2	.592,-2	.587,-2	.552,-2	.451,-2
29	.422,-2	.526,-2	.350,-2	.594,-2	.486,-2
30	.526,-2	.501,-2	.430,-2	.708,-2	.435,-2
31	.539,-2	.605,-2	.434,-2	.570,-2	.472,-2
32	.458,-2	.639,-2	.422,-2	.411,-2	.510,-2
33	.378,-2	.543,-2	.374,-2	.430,-2	.626,-2
34	.647,-2	.654,-2	.414,-2	.468,-2	.695,-2
35	.825,-2	.824,-2	.460,-2	.546,-2	.632,-2
36	.751,-2	.695,-2	.352,-2	.522,-2	.578,-2
37	.656,-2	.685,-2	.312,-2	.475,-2	.616,-2
38	.591,-2	.669,-2	.411,-2	.469,-2	.550,-2
39	.787,-2	.542,-2	.457,-2	.573,-2	.690,-2
40	.796,-2	.467,-2	.381,-2	.652,-2	.754,-2
41	.680,-2	.382,-2	.349,-2	.629,-2	.624,-2
42	.433,-2	.361,-2	.322,-2	.587,-2	.569,-2
43	.417,-2	.442,-2	.355,-2	.474,-2	.502,-2
44	.540,-2	.400,-2	.301,-2	.486,-2	.516,-2
45	.628,-2	.415,-2	.256,-2	.526,-2	.466,-2
46	.621,-2	.462,-2	.241,-2	.613,-2	.496,-2
47	.515,-2	.562,-2	.231,-2	.581,-2	.489,-2
48	.532,-2	.689,-2	.245,-2	.713,-2	.391,-2
49	.461,-2	.822,-2	.201,-2	.603,-2	.432,-2
50	.414,-2	.716,-2	.166,-2	.388,-2	.612,-2
51	.450,-2	.442,-2	.266,-2	.302,-2	.690,-2
52	.437,-2	.357,-2	.365,-2	.446,-2	.528,-2
53	.429,-2	.558,-2	.342,-2	.645,-2	.455,-2
54	.376,-2	.560,-2	.350,-2	.692,-2	.559,-2
55	.377,-2	.456,-2	.309,-2	.572,-2	.537,-2
56	.502,-2	.482,-2	.284,-2	.555,-2	.493,-2
57	.524,-2	.458,-2	.367,-2	.500,-2	.475,-2
58	.510,-2	.395,-2	.376,-2	.367,-2	.370,-2
59	.410,-2	.347,-2	.313,-2	.370,-2	.317,-2
60	.360,-2	.288,-2	.226,-2	.355,-2	.313,-2

Run No. 23: v component

N	Anemometer Position Number				
	1	2	3	4	5
00	.508,-2	.269,-2	.342,-2	.299,-2	.246,-2
01	.682,-2	.399,-2	.388,-2	.430,-2	.349,-2
02	.566,-2	.582,-2	.457,-2	.556,-2	.471,-2
03	.469,-2	.578,-2	.414,-2	.464,-2	.441,-2
04	.759,-2	.463,-2	.383,-2	.418,-2	.320,-2
05	.968,-2	.482,-2	.531,-2	.384,-2	.294,-2
06	.737,-2	.449,-2	.467,-2	.402,-2	.313,-2
07	.574,-2	.415,-2	.571,-2	.458,-2	.362,-2
08	.433,-2	.359,-2	.656,-2	.408,-2	.421,-2
09	.460,-2	.364,-2	.561,-2	.408,-2	.387,-2
10	.595,-2	.349,-2	.407,-2	.464,-2	.284,-2
11	.568,-2	.292,-2	.295,-2	.490,-2	.282,-2
12	.456,-2	.290,-2	.312,-2	.476,-2	.336,-2
13	.459,-2	.398,-2	.354,-2	.497,-2	.379,-2
14	.451,-2	.505,-2	.405,-2	.311,-2	.375,-2
15	.518,-2	.201,-2	.501,-2	.434,-2	.287,-2
16	.469,-2	.195,-2	.368,-2	.340,-2	.248,-2
17	.544,-2	.327,-2	.291,-2	.311,-2	.216,-2
18	.564,-2	.490,-2	.313,-2	.359,-2	.254,-2
19	.339,-2	.470,-2	.344,-2	.420,-2	.292,-2
20	.309,-2	.476,-2	.389,-2	.429,-2	.341,-2
21	.482,-2	.419,-2	.331,-2	.357,-2	.275,-2
22	.560,-2	.353,-2	.350,-2	.391,-2	.297,-2
23	.497,-2	.394,-2	.309,-2	.296,-2	.291,-2
24	.614,-2	.360,-2	.290,-2	.294,-2	.284,-2
25	.331,-2	.311,-2	.326,-2	.306,-2	.240,-2
26	.422,-2	.298,-2	.465,-2	.409,-2	.249,-2
27	.484,-2	.390,-2	.397,-2	.457,-2	.271,-2
28	.480,-2	.309,-2	.264,-2	.307,-2	.292,-2
29	.376,-2	.304,-2	.260,-2	.368,-2	.206,-2
30	.441,-2	.319,-2	.338,-2	.408,-2	.263,-2
31	.415,-2	.311,-2	.329,-2	.282,-2	.245,-2
32	.259,-2	.289,-2	.247,-2	.274,-2	.260,-2
33	.305,-2	.232,-2	.231,-2	.231,-2	.267,-2
34	.330,-2	.254,-2	.238,-2	.249,-2	.291,-2
35	.338,-2	.263,-2	.335,-2	.354,-2	.309,-2
36	.479,-2	.256,-2	.268,-2	.489,-2	.263,-2
37	.368,-2	.302,-2	.251,-2	.385,-2	.259,-2
38	.318,-2	.318,-2	.296,-2	.397,-2	.306,-2
39	.373,-2	.324,-2	.258,-2	.382,-2	.335,-2
40	.401,-2	.449,-2	.263,-2	.399,-2	.308,-2
41	.311,-2	.474,-2	.361,-2	.471,-2	.224,-2
42	.285,-2	.359,-2	.379,-2	.349,-2	.291,-2
43	.385,-2	.416,-2	.320,-2	.341,-2	.312,-2
44	.408,-2	.488,-2	.309,-2	.400,-2	.333,-2
45	.297,-2	.473,-2	.399,-2	.392,-2	.359,-2
46	.252,-2	.407,-2	.335,-2	.372,-2	.296,-2
47	.361,-2	.276,-2	.308,-2	.443,-2	.202,-2
48	.384,-2	.227,-2	.247,-2	.318,-2	.230,-2
49	.359,-2	.247,-2	.229,-2	.201,-2	.047,-2
50	.405,-2	.348,-2	.256,-2	.209,-2	.205,-2
51	.386,-2	.486,-2	.301,-2	.302,-2	.232,-2
52	.382,-2	.440,-2	.315,-2	.385,-2	.292,-2
53	.411,-2	.342,-2	.346,-2	.342,-2	.255,-2
54	.361,-2	.332,-2	.290,-2	.302,-2	.268,-2
55	.285,-2	.367,-2	.216,-2	.354,-2	.260,-2
56	.301,-2	.441,-2	.189,-2	.361,-2	.275,-2
57	.380,-2	.470,-2	.298,-2	.375,-2	.267,-2
58	.339,-2	.385,-2	.301,-2	.406,-2	.300,-2
59	.306,-2	.217,-2	.202,-2	.360,-2	.219,-2
60	.240,-2	.145,-2	.169,-2	.306,-2	.137,-2

Run No. 24; u component

N	Anemometer Position Number 1	2	3	4	5
00	.867,-1	.866,-1	.145	.322	.125
01	.129	.124	.156	.384	.150
02	.162	.148	.116	.315	.173
03	.129	.979,-1	.949,-1	.168	.141
04	.743,-1	.464,-1	.805,-1	.998,-1	.983,-1
05	.546,-1	.521,-1	.560,-1	.811,-1	.648,-1
06	.552,-1	.585,-1	.478,-1	.609,-1	.489,-1
07	.477,-1	.447,-1	.387,-1	.666,-1	.455,-1
08	.397,-1	.309,-1	.288,-1	.675,-1	.341,-1
09	.299,-1	.289,-1	.275,-1	.618,-1	.250,-1
10	.253,-1	.316,-1	.287,-1	.468,-1	.240,-1
11	.164,-1	.279,-1	.220,-1	.344,-1	.301,-1
12	.102,-1	.192,-1	.137,-1	.261,-1	.264,-1
13	.167,-1	.167,-1	.124,-1	.198,-1	.235,-1
14	.220,-1	.187,-1	.108,-1	.226,-1	.199,-1
15	.220,-1	.177,-1	.967,-2	.209,-1	.168,-1
16	.195,-1	.205,-1	.980,-2	.177,-1	.235,-1
17	.173,-1	.224,-1	.105,-1	.180,-1	.255,-1
18	.146,-1	.229,-1	.110,-1	.187,-1	.168,-1
19	.146,-1	.152,-1	.121,-1	.154,-1	.123,-1
20	.152,-1	.906,-2	.121,-1	.135,-1	.133,-1
21	.103,-1	.913,-2	.951,-2	.150,-1	.138,-1
22	.987,-2	.907,-2	.878,-2	.152,-1	.121,-1
23	.100,-1	.758,-2	.917,-2	.143,-1	.146,-1
24	.101,-1	.699,-2	.925,-2	.123,-1	.128,-1
25	.108,-1	.740,-2	.729,-2	.126,-1	.989,-2
26	.847,-2	.697,-2	.529,-2	.123,-1	.902,-2
27	.735,-2	.623,-2	.536,-2	.105,-1	.123,-1
28	.702,-2	.621,-2	.572,-2	.904,-2	.120,-1
29	.745,-2	.574,-2	.555,-2	.858,-2	.907,-2
30	.658,-2	.549,-2	.676,-2	.878,-2	.708,-2
31	.692,-2	.510,-2	.664,-2	.976,-2	.881,-2
32	.715,-2	.568,-2	.643,-2	.927,-2	.885,-2
33	.543,-2	.645,-2	.474,-2	.909,-2	.884,-2
34	.495,-2	.636,-2	.372,-2	.924,-2	.971,-2
35	.466,-2	.593,-2	.544,-2	.936,-2	.888,-2
36	.454,-2	.618,-2	.590,-2	.803,-2	.695,-2
37	.502,-2	.630,-2	.583,-2	.779,-2	.621,-2
38	.638,-2	.499,-2	.604,-2	.780,-2	.749,-2
39	.713,-2	.505,-2	.409,-2	.551,-2	.903,-2
40	.622,-2	.551,-2	.343,-2	.560,-2	.751,-2
41	.559,-2	.492,-2	.323,-2	.675,-2	.691,-2
42	.574,-2	.446,-2	.314,-2	.542,-2	.622,-2
43	.605,-2	.394,-2	.313,-2	.564,-2	.698,-2
44	.634,-2	.339,-2	.283,-2	.587,-2	.616,-2
45	.464,-2	.304,-2	.314,-2	.469,-2	.600,-2
46	.350,-2	.288,-2	.350,-2	.360,-2	.530,-2
47	.362,-2	.307,-2	.301,-2	.394,-2	.371,-2
48	.410,-2	.293,-2	.218,-2	.394,-2	.346,-2
49	.480,-2	.317,-2	.215,-2	.297,-2	.432,-2
50	.491,-2	.334,-2	.291,-2	.388,-2	.405,-2
51	.491,-2	.307,-2	.312,-2	.404,-2	.461,-2
52	.348,-2	.265,-2	.251,-2	.293,-2	.602,-2
53	.284,-2	.249,-2	.311,-2	.332,-2	.789,-2
54	.481,-2	.251,-2	.434,-2	.336,-2	.565,-2
55	.621,-2	.268,-2	.443,-2	.322,-2	.432,-2
56	.529,-2	.255,-2	.293,-2	.445,-2	.438,-2
57	.371,-2	.361,-2	.336,-2	.551,-2	.468,-2
58	.328,-2	.362,-2	.367,-2	.476,-2	.422,-2
59	.336,-2	.260,-2	.241,-2	.362,-2	.346,-2
60	.327,-2	.214,-2	.155,-2	.320,-2	.308,-2

Run No. 24; v component

N	Anemometer Position Number 1	2	3	4	5
00	.348,-1	.379,-1	.300,-1	.252,-1	.211,-1
01	.388,-1	.430,-1	.352,-1	.302,-1	.263,-1
02	.299,-1	.354,-1	.375,-1	.328,-1	.246,-1
03	.201,-1	.266,-1	.306,-1	.346,-1	.204,-1
04	.163,-1	.182,-1	.187,-1	.276,-1	.177,-1
05	.188,-1	.153,-1	.127,-1	.191,-1	.128,-1
06	.200,-1	.158,-1	.112,-1	.244,-1	.105,-1
07	.141,-1	.117,-1	.109,-1	.275,-1	.994,-2
08	.105,-1	.117,-1	.137,-1	.240,-1	.107,-1
09	.107,-1	.136,-1	.163,-1	.188,-1	.110,-1
10	.107,-1	.113,-1	.130,-1	.111,-1	.938,-2
11	.133,-1	.109,-1	.101,-1	.793,-2	.926,-2
12	.139,-1	.102,-1	.850,-2	.845,-2	.113,-1
13	.988,-2	.948,-2	.897,-2	.749,-2	.939,-2
14	.952,-2	.116,-1	.655,-2	.672,-2	.633,-2
15	.967,-2	.114,-1	.560,-2	.779,-2	.610,-2
16	.954,-2	.898,-2	.762,-2	.913,-2	.507,-2
17	.911,-2	.946,-2	.736,-2	.105,-1	.516,-2
18	.841,-2	.742,-2	.581,-2	.103,-1	.727,-2
19	.767,-2	.579,-2	.552,-2	.104,-1	.741,-2
20	.854,-2	.663,-2	.474,-2	.887,-2	.657,-2
21	.748,-2	.659,-2	.450,-2	.661,-2	.571,-2
22	.582,-2	.647,-2	.480,-2	.825,-2	.521,-2
23	.483,-2	.435,-2	.426,-2	.108,-1	.616,-2
24	.462,-2	.280,-2	.338,-2	.943,-2	.603,-2
25	.613,-2	.414,-2	.360,-2	.723,-2	.511,-2
26	.511,-2	.537,-2	.319,-2	.717,-2	.511,-2
27	.527,-2	.523,-2	.345,-2	.743,-2	.612,-2
28	.474,-2	.554,-2	.416,-2	.581,-2	.601,-2
29	.486,-2	.531,-2	.354,-2	.544,-2	.521,-2
30	.655,-2	.468,-2	.339,-2	.488,-2	.542,-2
31	.706,-2	.490,-2	.266,-2	.495,-2	.512,-2
32	.557,-2	.633,-2	.233,-2	.550,-2	.414,-2
33	.480,-2	.678,-2	.376,-2	.404,-2	.285,-2
34	.694,-2	.592,-2	.364,-2	.368,-2	.338,-2
35	.701,-2	.481,-2	.387,-2	.400,-2	.471,-2
36	.529,-2	.341,-2	.427,-2	.457,-2	.486,-2
37	.566,-2	.346,-2	.386,-2	.463,-2	.461,-2
38	.458,-2	.525,-2	.390,-2	.486,-2	.448,-2
39	.525,-2	.486,-2	.391,-2	.466,-2	.428,-2
40	.728,-2	.474,-2	.418,-2	.414,-2	.386,-2
41	.813,-2	.563,-2	.515,-2	.350,-2	.331,-2
42	.643,-2	.561,-2	.456,-2	.329,-2	.296,-2
43	.500,-2	.579,-2	.349,-2	.302,-2	.363,-2
44	.597,-2	.506,-2	.363,-2	.406,-2	.421,-2
45	.500,-2	.388,-2	.348,-2	.426,-2	.438,-2
46	.361,-2	.407,-2	.321,-2	.380,-2	.505,-2
47	.445,-2	.496,-2	.331,-2	.510,-2	.472,-2
48	.484,-2	.520,-2	.290,-2	.596,-2	.262,-2
49	.391,-2	.558,-2	.295,-2	.530,-2	.193,-2
50	.373,-2	.488,-2	.300,-2	.430,-2	.263,-2
51	.523,-2	.510,-2	.270,-2	.401,-2	.357,-2
52	.512,-2	.531,-2	.227,-2	.393,-2	.281,-2
53	.535,-2	.438,-2	.210,-2	.430,-2	.194,-2
54	.593,-2	.429,-2	.236,-2	.409,-2	.312,-2
55	.464,-2	.364,-2	.325,-2	.348,-2	.384,-2
56	.291,-2	.387,-2	.340,-2	.405,-2	.339,-2
57	.248,-2	.441,-2	.289,-2	.407,-2	.288,-2
58	.274,-2	.520,-2	.276,-2	.399,-2	.250,-2
59	.295,-2	.447,-2	.235,-2	.362,-2	.177,-2
60	.298,-2	.371,-2	.185,-2	.272,-2	.114,-2

Run No. 241 w component

N	Anemometer Position Number 1	2	3	4	5
00	.207,-2	.457,-2	.295,-2	.321,-2	.145,-2
01	.330,-2	.403,-2	.409,-2	.326,-2	.312,-2
02	.465,-2	.476,-2	.533,-2	.324,-2	.506,-2
03	.674,-2	.461,-2	.533,-2	.570,-2	.540,-2
04	.720,-2	.400,-2	.445,-2	.351,-2	.704,-2
05	.577,-2	.405,-2	.426,-2	.331,-2	.433,-2
06	.450,-2	.446,-2	.419,-2	.419,-2	.304,-2
07	.410,-2	.492,-2	.405,-2	.377,-2	.196,-2
08	.407,-2	.526,-2	.313,-2	.397,-2	.195,-2
09	.301,-2	.54 ,-2	.370,-2	.477,-2	.316,-2
10	.520,-2	.439,-2	.336,-2	.505,-2	.408,-2
11	.501,-2	.350,-2	.317,-2	.355,-2	.406,-2
12	.592,-2	.337,-2	.378,-2	.[illegible],-2	.525,-2
13	.411,-2	.[illegible],-2	.[illegible],-2	.[illegible],-2	.[illegible],-2
14	.405,-2	.[illegible],-2	.307,-2	.314,-2	.280,-2
15	.496,-2	.[illegible],-2	.204,-2	.[illegible],-2	.[illegible],-2
16	.445,-2	.[illegible],-2	.[illegible],-2	.[illegible],-2	.577,-2
17	.412,-2	.[illegible],-2	.[illegible],-2	.[illegible],-2	.[illegible],-2
18	.370,-2	.[illegible],-2	.[illegible],-2	.[illegible],-2	.[illegible],-2
19	.401,-2	.514,-2	.54 ,-2	.314,-2	.[illegible],-2
20	.570,-2	.378,-2	.315,-2	.[illegible],-2	.248,-2
21	.527,-2	.[illegible],-2	.367,-2	.[illegible],-2	.240,-2
22	.581,-2	.400,-2	.415,-2	.[illegible],-2	.207,-2
23	.[illegible],-2	.[illegible],-2	.330,-2	.[illegible],-2	.[illegible],-2
24	.435,-2	.[illegible],-2	.333,-2	.[illegible],-2	.[illegible],-2
25	.461,-2	.444,-2	.437,-2	.[illegible],-2	.347,-2
26	.401,-2	.420,-2	.343,-2	.351,-2	.[illegible],-2
27	.352,-2	.[illegible],-2	.[illegible],-2	.355,-2	.[illegible],-2
28	.[illegible],-2	.237,-2	.323,-2	.[illegible],-2	.393,-2
29	.401,-2	.219,-2	.316,-2	.157,-2	.360,-2
30	.[illegible],-2	.207,-2	.[illegible],-2	.[illegible],-2	.[illegible],-2
31	.411,-2	.[illegible],-2	.[illegible],-2	.313,-2	.174,-2
32	.[illegible],-2	.[illegible],-2	.[illegible],-2	.[illegible],-2	.[illegible],-2
33	.[illegible],-2	.[illegible],-2	.[illegible],-2	.[illegible],-2	.[illegible],-2
34	.[illegible],-2	.[illegible],-2	.[illegible],-2	.[illegible],-2	.[illegible],-2
35	.[illegible],-2	.[illegible],-2	.[illegible],-2	.[illegible],-2	.[illegible],-2
36	.[illegible],-2	.[illegible],-2	.[illegible],-2	.[illegible],-2	.[illegible],-2
37	.[illegible],-2	.[illegible],-2	.[illegible],-2	.[illegible],-2	.[illegible],-2
38	.[illegible],-2	.[illegible],-2	.[illegible],-2	.[illegible],-2	.[illegible],-2
39	.[illegible],-2	.[illegible],-2	.[illegible],-2	.[illegible],-2	.[illegible],-2
40	.[illegible],-2	.[illegible],-2	.[illegible],-2	.[illegible],-2	.[illegible],-2
41	.[illegible],-2	.[illegible],-2	.[illegible],-2	.[illegible],-2	.[illegible],-2
42	.[illegible],-2	.[illegible],-2	.[illegible],-2	.[illegible],-2	.[illegible],-2
43	.[illegible],-2	.[illegible],-2	.[illegible],-2	.[illegible],-2	.[illegible],-2
44	.[illegible],-2	.[illegible],-2	.[illegible],-2	.[illegible],-2	.[illegible],-2
45	.[illegible],-2	.[illegible],-2	.[illegible],-2	.[illegible],-2	.[illegible],-2
46	.[illegible],-2	.[illegible],-2	.[illegible],-2	.[illegible],-2	.[illegible],-2
47	.[illegible],-2	.[illegible],-2	.[illegible],-2	.[illegible],-2	.[illegible],-2
48	.[illegible],-2	.[illegible],-2	.[illegible],-2	.[illegible],-2	.[illegible],-2
49	.[illegible],-2	.[illegible],-2	.[illegible],-2	.[illegible],-2	.[illegible],-2
50	.[illegible],-2	.[illegible],-2	.[illegible],-2	.[illegible],-2	.[illegible],-2
51	.[illegible],-2	.[illegible],-2	.[illegible],-2	.[illegible],-2	.[illegible],-2
52	.[illegible],-2	.[illegible],-2	.[illegible],-2	.[illegible],-2	.[illegible],-2
53	.[illegible],-2	.[illegible],-2	.[illegible],-2	.[illegible],-2	.[illegible],-2
54	.[illegible],-2	.[illegible],-2	.[illegible],-2	.[illegible],-2	.[illegible],-2
55	.[illegible],-2	.[illegible],-2	.[illegible],-2	.[illegible],-2	.[illegible],-2
56	.[illegible],-2	.[illegible],-2	.[illegible],-2	.[illegible],-2	.[illegible],-2
57	.[illegible],-2	.[illegible],-2	.[illegible],-2	.[illegible],-2	.[illegible],-2
58	.[illegible],-2	.[illegible],-2	.[illegible],-2	.[illegible],-2	.[illegible],-2
59	.[illegible],-2	.[illegible],-2	.[illegible],-2	.[illegible],-2	.[illegible],-2
60	.[illegible],-2	.[illegible],-2	.[illegible],-2	.[illegible],-2	.[illegible],-2

Run No. 26; u component

N	Anemometer Position Number 1	2	3	4	5
00			.607	.844	
01			.420	.595	
02			.195	.283	
03			.108	.124	
04			.814,-1	.685,-1	
05			.760,-1	.905,-1	
06			.487,-1	.422,-1	
07			.345,-1	.423,-1	
08			.281,-1	.308,-1	
09			.211,-1	.304,-1	
10			.231,-1	.305,-1	
11			.220,-1	.255,-1	
12			.176,-1	.225,-1	
13			.139,-1	.206,-1	
14			.130,-1	.283,-1	
15			.137,-1	.189,-1	
16			.131,-1	.125,-1	
17			.135,-1	.133,-1	
18			.135,-1	.148,-1	
19			.126,-1	.183,-1	
20			.110,-1	.163,-1	
21			.101,-1	.152,-1	
22			.963,-2	.133,-1	
23			.832,-2	.118,-1	
24			.799,-2	.120,-1	
25			.906,-2	.905,-2	
26			.962,-2	.871,-2	
27			.882,-2	.843,-2	
28			.826,-2	.756,-2	
29			.737,-2	.833,-2	
30			.779,-2	.707,-2	
31			.652,-2	.447,-2	
32			.479,-2	.540,-2	
33			.514,-2	.680,-2	
34			.655,-2	.677,-2	
35			.696,-2	.602,-2	
36			.684,-2	.639,-2	
37			.529,-2	.659,-2	
38			.595,-2	.674,-2	
39			.695,-2	.572,-2	
40			.597,-2	.572,-2	
41			.559,-2	.680,-2	
42			.585,-2	.500,-2	
43			.553,-2	.380,-2	
44			.498,-2	.423,-2	
45			.525,-2	.394,-2	
46			.526,-2	.328,-2	
47			.514,-2	.301,-2	
48			.603,-2	.370,-2	
49			.449,-2	.428,-2	
50			.383,-2	.323,-2	
51			.406,-2	.203,-2	
52			.266,-2	.208,-2	
53			.276,-2	.249,-2	
54			.299,-2	.249,-2	
55			.270,-2	.226,-2	
56			.307,-2	.268,-2	
57			.311,-2	.321,-2	
58			.274,-2	.414,-2	
59			.242,-2	.405,-2	
60			.191,-2	.319,-2	

Run No. 26; v component

N	Anemometer Position Number 1	2	3	4	5
00			.576	.559	
01			.381	.361	
02			.156	.129	
03			.770,-1	.606,-1	
04			.436,-1	.382,-1	
05			.346,-1	.347,-1	
06			.286,-1	.326,-1	
07			.212,-1	.222,-1	
08			.164,-1	.178,-1	
09			.185,-1	.211,-1	
10			.176,-1	.178,-1	
11			.167,-1	.134,-1	
12			.161,-1	.121,-1	
13			.135,-1	.125,-1	
14			.112,-1	.976,-2	
15			.102,-1	.779,-2	
16			.982,-2	.874,-2	
17			.894,-2	.900,-2	
18			.847,-2	.801,-2	
19			.687,-2	.779,-2	
20			.843,-2	.795,-2	
21			.830,-2	.802,-2	
22			.810,-2	.711,-2	
23			.761,-2	.706,-2	
24			.738,-2	.774,-2	
25			.777,-2	.707,-2	
26			.614,-2	.503,-2	
27			.675,-2	.452,-2	
28			.844,-2	.520,-2	
29			.741,-2	.467,-2	
30			.670,-2	.385,-2	
31			.698,-2	.527,-2	
32			.570,-2	.465,-2	
33			.511,-2	.362,-2	
34			.402,-2	.331,-2	
35			.438,-2	.362,-2	
36			.540,-2	.372,-2	
37			.396,-2	.336,-2	
38			.314,-2	.356,-2	
39			.437,-2	.463,-2	
40			.645,-2	.442,-2	
41			.670,-2	.367,-2	
42			.494,-2	.372,-2	
43			.497,-2	.400,-2	
44			.591,-2	.433,-2	
45			.560,-2	.351,-2	
46			.382,-2	.285,-2	
47			.399,-2	.279,-2	
48			.414,-2	.262,-2	
49			.491,-2	.225,-2	
50			.546,-2	.245,-2	
51			.463,-2	.256,-2	
52			.377,-2	.318,-2	
53			.402,-2	.408,-2	
54			.445,-2	.381,-2	
55			.435,-2	.230,-2	
56			.430,-2	.177,-2	
57			.369,-2	.297,-2	
58			.257,-2	.415,-2	
59			.182,-2	.286,-2	
60			.117,-2	.160,-2	

Run No. 26; w component

N	Anemometer Position Number 1	2	3	4	5
00			.360,-2	.276,-2	
01			.355,-2	.335,-2	
02			.519,-2	.450,-2	
03			.658,-2	.488,-2	
04			.581,-2	.366,-2	
05			.434,-2	.291,-2	
06			.480,-2	.336,-2	
07			.562,-2	.362,-2	
08			.514,-2	.325,-2	
09			.456,-2	.281,-2	
10			.519,-2	.345,-2	
11			.570,-2	.374,-2	
12			.482,-2	.306,-2	
13			.417,-2	.278,-2	
14			.300,-2	.254,-2	
15			.468,-2	.270,-2	
16			.405,-2	.269,-2	
17			.292,-2	.268,-2	
18			.331,-2	.276,-2	
19			.446,-2	.247,-2	
20			.388,-2	.201,-2	
21			.257,-2	.217,-2	
22			.257,-2	.178,-2	
23			.217,-2	.235,-2	
24			.243,-2	.267,-2	
25			.265,-2	.265,-2	
26			.307,-2	.241,-2	
27			.314,-2	.234,-2	
28			.305,-2	.188,-2	
29			.265,-2	.197,-2	
30			.255,-2	.212,-2	
31			.254,-2	.192,-2	
32			.279,-2	.179,-2	
33			.268,-2	.211,-2	
34			.317,-2	.240,-2	
35			.313,-2	.338,-2	
36			.290,-2	.267,-2	
37			.350,-2	.247,-2	
38			.449,-2	.240,-2	
39			.591,-2	.178,-2	
40			.[illegible],-2	.193,-2	
41			.[illegible],-2	.208,-2	
42			.[illegible],-2	.180,-2	
43			.429,-2	.209,-2	
44			.444,-2	.200,-2	
45			.409,-2	.169,-2	
46			.377,-2	.157,-2	
47			.404,-2	.179,-2	
48			.367,-2	.222,-2	
49			.229,-2	.254,-2	
50			.258,-2	.223,-2	
51			.321,-2	.204,-2	
52			.256,-2	.377,-2	
53			.250,-2	.333,-2	
54			.319,-2	.227,-2	
55			.290,-2	.215,-2	
56			.251,-2	.236,-2	
57			.245,-2	.206,-2	
58			.215,-2	.198,-2	
59			.180,-2	.223,-2	
60			.140,-2	.220,-2	



Run No. 27; u component

N	Anemometer Position Number 1	2	3	4	5
00	.677	.444	.260		
01	.489	.366	.215		
02	.243	.183	.133		
03	.144	.864,-1	.952,-1		
04	.898,-1	.704,-1	.670,-1		
05	.605,-1	.600,-1	.510,-1		
06	.434,-1	.433,-1	.445,-1		
07	.401,-1	.420,-1	.376,-1		
08	.317,-1	.400,-1	.351,-1		
09	.204,-1	.312,-1	.265,-1		
10	.165,-1	.323,-1	.315,-1		
11	.172,-1	.292,-1	.220,-1		
12	.172,-1	.244,-1	.175,-1		
13	.160,-1	.178,-1	.185,-1		
14	.132,-1	.114,-1	.199,-1		
15	.119,-1	.119,-1	.148,-1		
16	.104,-1	.111,-1	.126,-1		
17	.101,-1	.133,-1	.150,-1		
18	.144,-1	.163,-1	.132,-1		
19	.147,-1	.154,-1	.815,-2		
20	.136,-1	.132,-1	.556,-2		
21	.140,-1	.124,-1	.701,-2		
22	.115,-1	.112,-1	.942,-2		
23	.926,-2	.763,-2	.101,-1		
24	.757,-2	.627,-2	.116,-1		
25	.937,-2	.797,-2	.986,-2		
26	.937,-2	.899,-2	.698,-2		
27	.691,-2	.706,-2	.537,-2		
28	.650,-2	.535,-2	.895,-2		
29	.702,-2	.871,-2	.101,-1		
30	.647,-2	.103,-1	.827,-2		
31	.612,-2	.767,-2	.530,-2		
32	.524,-2	.742,-2	.453,-2		
33	.460,-2	.635,-2	.534,-2		
34	.508,-2	.456,-2	.418,-2		
35	.551,-2	.372,-2	.411,-2		
36	.554,-2	.314,-2	.417,-2		
37	.639,-2	.439,-2	.396,-2		
38	.670,-2	.515,-2	.464,-2		
39	.673,-2	.460,-2	.485,-2		
40	.546,-2	.415,-2	.419,-2		
41	.494,-2	.360,-2	.416,-2		
42	.494,-2	.287,-2	.358,-2		
43	.612,-2	.298,-2	.303,-2		
44	.615,-2	.346,-2	.314,-2		
45	.482,-2	.401,-2	.327,-2		
46	.470,-2	.418,-2	.286,-2		
47	.395,-2	.323,-2	.328,-2		
48	.367,-2	.220,-2	.349,-2		
49	.453,-2	.232,-2	.269,-2		
50	.498,-2	.354,-2	.281,-2		
51	.445,-2	.376,-2	.353,-2		
52	.391,-2	.280,-2	.335,-2		
53	.477,-2	.330,-2	.318,-2		
54	.500,-2	.360,-2	.347,-2		
55	.526,-2	.288,-2	.378,-2		
56	.569,-2	.263,-2	.459,-2		
57	.499,-2	.262,-2	.387,-2		
58	.423,-2	.243,-2	.227,-2		
59	.277,-2	.258,-2	.195,-2		
60	.183,-2	.236,-2	.197,-2		

Run No. 27; v component

	Anemometer Position Number				
H	1	2	3	4	5
00	.255	.307	.406		
01	.223	.265	.308		
02	.139	.162	.145		
03	.764,-1	.920,-1	.749,-1		
04	.540,-1	.577,-1	.488,-1		
05	.395,-1	.456,-1	.385,-1		
06	.200,-1	.385,-1	.257,-1		
07	.177,-1	.317,-1	.204,-1		
08	.842,-1	.245,-1	.191,-1		
09	.209,-1	.151,-1	.183,-1		
10	.153,-1	.113,-1	.201,-1		
11	.167,-1	.143,-1	.163,-1		
12	.165,-1	.119,-1	.104,-1		
13	.106,-1	.102,-1	.771,-2		
14	.824,-2	.102,-1	.681,-2		
15	.748,-2	.104,-1	.695,-2		
16	.735,-2	.115,-1	.625,-2		
17	.908,-2	.967,-2	.510,-2		
18	.101,-1	.670,-2	.351,-2		
19	.848,-2	.715,-2	.359,-2		
20	.755,-2	.604,-2	.416,-2		
21	.740,-2	.572,-2	.483,-2		
22	.628,-2	.694,-2	.505,-2		
23	.616,-2	.678,-2	.572,-2		
24	.702,-2	.636,-2	.451,-2		
25	.639,-2	.721,-2	.404,-2		
26	.622,-2	.698,-2	.327,-2		
27	.600,-2	.866,-2	.408,-2		
28	.537,-2	.806,-2	.498,-2		
29	.565,-2	.565,-2	.453,-2		
30	.503,-2	.484,-2	.395,-2		
31	.469,-2	.395,-2	.366,-2		
32	.522,-2	.469,-2	.358,-2		
33	.541,-2	.778,-2	.485,-2		
34	.405,-2	.804,-2	.414,-2		
35	.421,-2	.586,-2	.419,-2		
36	.531,-2	.507,-2	.271,-2		
37	.545,-2	.484,-2	.350,-2		
38	.444,-2	.545,-2	.340,-2		
39	.405,-2	.594,-2	.366,-2		
40	.393,-2	.571,-2	.429,-2		
41	.405,-2	.469,-2	.318,-2		
42	.385,-2	.393,-2	.344,-2		
43	.474,-2	.461,-2	.410,-2		
44	.442,-2	.523,-2	.423,-2		
45	.469,-2	.521,-2	.344,-2		
46	.537,-2	.461,-2	.269,-2		
47	.509,-2	.469,-2	.309,-2		
48	.478,-2	.419,-2	.295,-2		
49	.397,-2	.458,-2	.299,-2		
50	.427,-2	.469,-2	.282,-2		
51	.506,-2	.351,-2	.299,-2		
52	.458,-2	.277,-2	.412,-2		
53	.369,-2	.257,-2	.524,-2		
54	.380,-2	.361,-2	.421,-2		
55	.442,-2	.391,-2	.344,-2		
56	.385,-2	.354,-2	.364,-2		
57	.309,-2	.273,-2	.284,-2		
58	.272,-2	.253,-2	.305,-2		
59	.345,-2	.223,-2	.396,-2		
60	.284,-2	.202,-2	.335,-2		

Run No. 27; w component

N	Anemometer Position Number 1	2	3	4	5
00	.315	.400,-2	.242,-2		
01	.206	.559,-2	.524,-2		
02	.572,-1	.712,-2	.481,-2		
03	.540,-1	.635,-2	.523,-2		
04	.622,-1	.546,-2	.424,-2		
05	.781,-1	.599,-2	.530,-2		
06	.559,-1	.427,-2	.328,-2		
07	.368,-1	.415,-2	.319,-2		
08	.422,-1	.476,-2	.438,-2		
09	.272,-1	.496,-2	.408,-2		
10	.224,-1	.525,-2	.415,-2		
11	.229,-1	.445,-2	.412,-2		
12	.321,-1	.489,-2	.390,-2		
13	.288,-1	.512,-2	.427,-2		
14	.269,-2	.470,-2	.365,-2		
15	.701,-2	.414,-2	.234,-2		
16	.801,-2	.424,-2	.234,-2		
17	.116,-1	.452,-2	.247,-2		
18	.111,-1	.470,-2	.245,-2		
19	.241,-2	.438,-2	.256,-2		
20	.195,-1	.381,-2	.244,-2		
21	.977,-2	.505,-2	.261,-2		
22	.960,-2	.445,-2	.283,-2		
23	.871,-2	.394,-2	.214,-2		
24	.687,-2	.455,-2	.275,-2		
25	.126,-1	.547,-2	.322,-2		
26	.224,-1	.569,-2	.307,-2		
27	.184,-1	.550,-2	.284,-2		
28	.117,-1	.506,-2	.310,-2		
29	.965,-2	.475,-2	.304,-2		
30	.910,-2	.455,-2	.294,-2		
31	.960,-2	.355,-2	.174,-2		
32	.855,-2	.274,-2	.171,-2		
33	.796,-2	.423,-2	.190,-2		
34	.122,-1	.422,-2	.189,-2		
35	.129,-1	.545,-2	.301,-2		
36	.901,-2	.434,-2	.325,-2		
37	.781,-2	.508,-2	.285,-2		
38	.859,-2	.490,-2	.251,-2		
39	.110,-1	.477,-2	.225,-2		
40	.942,-2	.468,-2	.240,-2		
41	.101,-1	.365,-2	.239,-2		
42	.102,-1	.277,-2	.197,-2		
43	.116,-1	.211,-2	.202,-2		
44	.124,-1	.220,-2	.258,-2		
45	.715,-2	.263,-2	.284,-2		
46	.547,-2	.229,-2	.219,-2		
47	.502,-2	.253,-2	.220,-2		
48	.655,-2	.233,-2	.234,-2		
49	.672,-2	.446,-2	.227,-2		
50	.780,-2	.473,-2	.208,-2		
51	.743,-2	.438,-2	.180,-2		
52	.586,-2	.475,-2	.213,-2		
53	.685,-2	.439,-2	.227,-2		
54	.802,-2	.412,-2	.255,-2		
55	.618,-2	.426,-2	.302,-2		
56	.544,-2	.378,-2	.274,-2		
57	.634,-2	.292,-2	.275,-2		
58	.687,-2	.319,-2	.304,-2		
59	.538,-2	.247,-2	.246,-2		
60	.345,-2	.212,-2	.191,-2		

Run No. 23; u component

N	Anemometer Position Number 1	2	3	4	5
00	.705,-1	.710,-1	.527,-1	.738,-1	.518,-1
01	.516,-1	.504,-1	.392,-1	.517,-1	.377,-1
02	.261,-1	.218,-1	.204,-1	.241,-1	.207,-1
03	.140,-1	.941,-2	.136,-1	.226,-1	.215,-1
04	.111,-1	.845,-2	.104,-1	.152,-1	.120,-1
05	.905,-2	.795,-2	.771,-2	.825,-2	.850,-2
06	.602,-2	.490,-2	.659,-2	.105,-1	.735,-2
07	.671,-2	.406,-2	.511,-2	.131,-1	.705,-2
08	.771,-2	.576,-2	.502,-2	.107,-1	.681,-2
09	.734,-2	.580,-2	.443,-2	.922,-2	.690,-2
10	.648,-2	.515,-2	.459,-2	.500,-2	.557,-2
11	.425,-2	.385,-2	.397,-2	.342,-2	.384,-2
12	.297,-2	.341,-2	.302,-2	.389,-2	.406,-2
13	.246,-2	.341,-2	.340,-2	.401,-2	.442,-2
14	.245,-2	.293,-2	.282,-2	.419,-2	.370,-2
15	.261,-2	.291,-2	.215,-2	.260,-2	.246,-2
16	.279,-2	.277,-2	.244,-2	.299,-2	.213,-2
17	.250,-2	.260,-2	.264,-2	.277,-2	.208,-2
18	.245,-2	.226,-2	.279,-2	.245,-2	.220,-2
19	.244,-2	.171,-2	.270,-2	.198,-2	.176,-2
20	.240,-2	.195,-2	.233,-2	.140,-2	.110,-2
21	.202,-2	.197,-2	.199,-2	.146,-2	.148,-2
22	.170,-2	.237,-2	.192,-2	.218,-2	.216,-2
23	.141,-2	.206,-2	.126,-2	.210,-2	.214,-2
24	.127,-2	.147,-2	.101,-2	.145,-2	.187,-2
25	.145,-2	.135,-2	.117,-2	.111,-2	.161,-2
26	.147,-2	.115,-2	.134,-2	.146,-2	.200,-2
27	.140,-2	.120,-2	.108,-2	.137,-2	.187,-2
28	.101,-2	.147,-2	.121,-2	.126,-2	.122,-2
29	.102,-2	.142,-2	.173,-2	.146,-2	.107,-2
30	.121,-2	.117,-2	.121,-2	.146,-2	.140,-2
31	.106,-2	.113,-2	.892,-3	.141,-2	.127,-2
32	.730,-3	.792,-3	.834,-3	.755,-3	.874,-3
33	.713,-3	.818,-3	.846,-3	.650,-3	.694,-3
34	.649,-3	.614,-3	.102,-2	.805,-3	.694,-3
35	.724,-3	.614,-3	.102,-2	.[illegible],-3	.801,-3
36	.614,-3	.547,-3	.902,-3	.806,-3	.702,-3
37	.617,-3	.872,-3	.917,-3	.747,-3	.665,-3
38	.813,-3	.716,-3	.774,-3	.649,-3	.844,-3
39	.757,-3	.[illegible],-3	.913,-3	.[illegible],-3	.[illegible],-3
40	.634,-3	.[illegible],-3	.872,-3	.[illegible],-3	.788,-3
41	.500,-3	.100,-2	.125,-2	.611,-3	.724,-3
42	.600,-3	.[illegible],-3	.140,-2	.701,-3	.605,-3
43	.542,-3	.[illegible],-3	.111,-2	.617,-3	.496,-3
44	.[illegible],-3	.720,-3	.[illegible],-3	.945,-3	.525,-3
45	.[illegible],-3	.661,-3	.771,-3	.607,-3	.726,-3
46	.[illegible],-3	.[illegible],-3	.765,-3	.597,-3	.[illegible],-3
47	.674,-3	.[illegible],-3	.[illegible],-3	.655,-3	.[illegible],-3
48	.[illegible],-3	.[illegible],-3	.[illegible],-3	.[illegible],-3	.715,-3
49	.[illegible],-3	.[illegible],-3	.[illegible],-3	.456,-3	.[illegible],-3
50	.[illegible],-3	.[illegible],-3	.[illegible],-3	.[illegible],-3	.717,-3
51	.[illegible],-3	.[illegible],-3	.[illegible],-3	.[illegible],-3	.[illegible],-3
52	.[illegible],-3	.[illegible],-3	.730,-3	.[illegible],-3	.[illegible],-3
53	.361,-3	.554,-3	.940,-3	.300,-3	.613,-3
54	.444,-3	.454,-3	.[illegible],-3	.[illegible],-3	.[illegible],-3
55	.562,-3	.414,-3	.735,-3	.444,-3	.654,-3
56	.[illegible],-3	.[illegible],-3	.[illegible],-3	.320,-3	.550,-3
57	.440,-3	.[illegible],-3	.659,-3	.540,-3	.601,-3
58	.304,-3	.512,-3	.463,-3	.406,-3	.[illegible],-3
59	.240,-3	.453,-3	.[illegible],-3	.312,-3	.520,-3
60	.195,-3	.379,-3	.338,-3	.197,-3	.412,-3

Run No. 23: v component

N	Anemometer Position Number 1	2	3	4	5
00	.737,-2	.522,-2	.725,-2	.661,-2	.319,-2
01	.640,-2	.413,-2	.633,-2	.527,-2	.240,-2	
02	.510,-2	.248,-2	.410,-2	.232,-2	.220,-2	
03	.340,-2	.242,-2	.311,-2	.205,-2	.197,-2	
04	.245,-2	.223,-2	.282,-2	.223,-2	.157,-2	
05	.241,-2	.211,-2	.240,-2	.191,-2	.140,-2	
06	.238,-2	.255,-2	.219,-2	.145,-2	.178,-2	
07	.272,-2	.202,-2	.198,-2	.166,-2	.176,-2	
08	.291,-2	.235,-2	.142,-2	.178,-2	.151,-2	
09	.171,-2	.155,-2	.135,-2	.192,-2	.174,-2	
10	.156,-2	.144,-2	.194,-2	.170,-2	.186,-2	
11	.142,-2	.187,-2	.234,-2	.152,-2	.178,-2	
12	.162,-2	.154,-2	.219,-2	.191,-2	.150,-2	
13	.155,-2	.140,-2	.140,-2	.197,-2	.139,-2	
14	.135,-2	.145,-2	.135,-2	.193,-2	.159,-2	
15	.207,-2	.125,-2	.127,-2	.157,-2	.131,-2	
16	.162,-2	.137,-2	.117,-2	.112,-2	.162,-2	
17	.153,-2	.135,-2	.156,-2	.107,-2	.162,-2	
18	.150,-2	.971,-3	.178,-2	.106,-2	.157,-2	
19	.146,-2	.970,-3	.106,-2	.107,-2	.146,-2	
20	.151,-2	.127,-2	.101,-2	.105,-2	.127,-2	
21	.105,-2	.114,-2	.104,-2	.117,-2	.117,-2	
22	.962,-3	.701,-3	.926,-3	.126,-2	.971,-3	
23	.920,-3	.758,-3	.916,-3	.125,-2	.959,-3	
24	.105,-2	.744,-3	.806,-3	.110,-2	.925,-3	
25	.106,-2	.750,-3	.772,-3	.946,-3	.906,-3	
26	.105,-2	.691,-3	.890,-3	.962,-3	.110,-2	
27	.102,-2	.704,-3	.886,-3	.947,-3	.110,-2	
28	.978,-3	.950,-3	.815,-3	.798,-3	.124,-2	
29	.955,-3	.755,-3	.944,-3	.942,-3	.157,-2	
30	.111,-2	.791,-3	.807,-3	.940,-3	.124,-2	
31	.101,-2	.837,-3	.744,-3	.762,-3	.114,-2	
32	.747,-3	.774,-3	.720,-3	.851,-3	.110,-2	
33	.692,-3	.595,-3	.801,-3	.765,-3	.977,-3	
34	.662,-3	.822,-3	.910,-3	.937,-3	.760,-3	
35	.791,-3	.559,-3	.647,-3	.778,-3	.791,-3	
36	.661,-3	.740,-3	.757,-3	.891,-3	.804,-3	
37	.653,-3	.813,-3	.797,-3	.758,-3	.951,-3	
38	.708,-3	.810,-3	.677,-3	.845,-3	.968,-3	
39	.776,-3	.807,-3	.740,-3	.962,-3	.100,-2	
40	.906,-3	.895,-3	.934,-3	.977,-3	.107,-2	
41	.860,-3	.928,-3	.900,-3	.981,-3	.104,-2	
42	.830,-3	.941,-3	.913,-3	.941,-3	.964,-3	
43	.717,-3	.825,-3	.851,-3	.908,-3	.888,-3	
44	.784,-3	.892,-3	.880,-3	.840,-3	.959,-3	
45	.885,-3	.829,-3	.760,-3	.952,-3	.868,-3	
46	.933,-3	.915,-3	.941,-3	.907,-3	.897,-3	
47	.834,-3	.832,-3	.832,-3	.966,-3	.752,-3	
48	.724,-3	.850,-3	.940,-3	.942,-3	.963,-3	
49	.813,-3	.829,-3	.847,-3	.972,-3	.903,-3	
50	.820,-3	.897,-3	.775,-3	.810,-3	.751,-3	
51	.971,-3	.909,-3	.736,-3	.996,-3	.884,-3	
52	.112,-2	.840,-3	.872,-3	.840,-3	.734,-3	
53	.115,-2	.920,-3	.814,-3	.910,-3	.963,-3	
54	.101,-2	.946,-3	.808,-3	.946,-3	.845,-3	
55	.753,-3	.860,-3	.958,-3	.996,-3	.912,-3	
56	.702,-3	.855,-3	.827,-3	.821,-3	.834,-3	
57	.771,-3	.805,-3	.747,-3	.855,-3	.750,-3	
58	.764,-3	.861,-3	.825,-3	.893,-3	.749,-3	
59	.561,-3	.810,-3	.822,-3	.836,-3	.833,-3	
60	.806,-3	.891,-3	.815,-3	.832,-3	.891,-3	

Run No. 28; w component

	Anemometer Position Number				
H	1	2	3	4	5
00	.551,-3	.484,-3	.680,-3	.587,-3	.534,-3
01	.740,-3	.680,-3	.985,-3	.857,-3	.727,-3
02	.106,-2	.110,-2	.138,-2	.142,-2	.984,-3
03	.150,-2	.119,-2	.117,-2	.139,-2	.107,-2
04	.143,-2	.864,-3	.866,-3	.676,-3	.850,-3
05	.117,-2	.100,-2	.677,-3	.458,-3	.609,-3
06	.804,-3	.960,-3	.551,-3	.710,-3	.609,-3
07	.831,-3	.918,-3	.504,-3	.111,-2	.691,-3
08	.988,-3	.180,-2	.635,-3	.104,-2	.772,-3
09	.921,-3	.140,-2	.674,-3	.947,-3	.746,-3
10	.945,-3	.121,-2	.582,-3	.913,-3	.782,-3
11	.975,-3	.876,-3	.475,-3	.906,-3	.945,-3
12	.845,-3	.741,-3	.538,-3	.868,-3	.714,-3
13	.851,-3	.847,-3	.591,-3	.887,-3	.917,-3
14	.106,-2	.704,-3	.597,-3	.750,-3	.101,-2
15	.104,-2	.651,-3	.699,-3	.941,-3	.105,-2
16	.971,-3	.768,-3	.652,-3	.910,-3	.952,-3
17	.899,-3	.715,-3	.551,-3	.912,-3	.867,-3
18	.750,-3	.561,-3	.597,-3	.807,-3	.767,-3
19	.854,-3	.416,-3	.599,-3	.494,-3	.610,-3
20	.985,-3	.460,-3	.480,-3	.405,-3	.475,-3
21	.864,-3	.691,-3	.560,-3	.515,-3	.601,-3
22	.817,-3	.714,-3	.666,-3	.664,-3	.502,-3
23	.806,-3	.618,-3	.590,-3	.674,-3	.509,-3
24	.702,-3	.682,-3	.451,-3	.682,-3	.555,-3
25	.650,-3	.619,-3	.460,-3	.599,-3	.591,-3
26	.601,-3	.672,-3	.406,-3	.510,-3	.640,-3
27	.677,-3	.591,-3	.436,-3	.479,-3	.550,-3
28	.618,-3	.575,-3	.443,-3	.667,-3	.576,-3
29	.569,-3	.717,-3	.554,-3	.576,-3	.464,-3
30	.574,-3	.804,-3	.552,-3	.385,-3	.574,-3
31	.757,-3	.769,-3	.542,-3	.578,-3	.474,-3
32	.741,-3	.612,-3	.553,-3	.556,-3	.574,-3
33	.864,-3	.619,-3	.424,-3	.574,-3	.441,-3
34	.880,-3	.616,-3	.454,-3	.404,-3	.561,-3
35	.810,-3	.701,-3	.535,-3	.405,-3	.551,-3
36	.810,-3	.927,-3	.610,-3	.455,-3	.510,-3
37	.661,-3	.974,-3	.709,-3	.457,-3	.639,-3
38	.595,-3	.768,-3	.764,-3	.474,-3	.739,-3
39	.652,-3	.659,-3	.679,-3	.392,-3	.785,-3
40	.648,-3	.747,-3	.705,-3	.536,-3	.564,-3
41	.687,-3	.737,-3	.534,-3	.964,-3	.471,-3
42	.604,-3	.710,-3	.385,-3	.522,-3	.471,-3
43	.717,-3	.701,-3	.510,-3	.575,-3	.402,-3
44	.801,-3	.846,-3	.601,-3	.557,-3	.471,-3
45	.844,-3	.670,-3	.664,-3	.525,-3	.533,-3
46	.794,-3	.928,-3	.605,-3	.570,-3	.520,-3
47	.665,-3	.627,-3	.552,-3	.593,-3	.492,-3
48	.716,-3	.656,-3	.505,-3	.579,-3	.453,-3
49	.687,-3	.635,-3	.481,-3	.569,-3	.555,-3
50	.717,-3	.567,-3	.505,-3	.525,-3	.488,-3
51	.611,-3	.449,-3	.454,-3	.289,-3	.412,-3
52	.473,-3	.507,-3	.459,-3	.279,-3	.379,-3
53	.558,-3	.601,-3	.491,-3	.515,-3	.521,-3
54	.780,-3	.708,-3	.453,-3	.455,-3	.417,-3
55	.801,-3	.644,-3	.529,-3	.510,-3	.488,-3
56	.650,-3	.616,-3	.615,-3	.518,-3	.477,-3
57	.519,-3	.596,-3	.471,-3	.550,-3	.491,-3
58	.595,-3	.488,-3	.485,-3	.382,-3	.515,-3
59	.514,-3	.405,-3	.494,-3	.265,-3	.435,-3
60	.378,-3	.358,-3	.382,-3	.198,-3	.334,-3



Run No. 32, u component

N	Anemometer Position Number 1	2	3	4	5
00	.157	.149	.146	.150	.163
01	.709,-1	.674,-1	.661,-1	.697,-1	.730,-1
02	.440,-2	.348,-2	.366,-2	.610,-2	.378,-2
03	.267,-2	.198,-2	.218,-2	.406,-2	.253,-2
04	.224,-2	.209,-2	.225,-2	.462,-2	.297,-2
05	.257,-2	.269,-2	.180,-2	.367,-2	.245,-2
06	.306,-2	.259,-2	.170,-2	.246,-2	.240,-2
07	.249,-2	.228,-2	.144,-2	.210,-2	.204,-2
08	.194,-2	.194,-2	.140,-2	.235,-2	.226,-2
09	.176,-2	.241,-2	.149,-2	.252,-2	.166,-2
10	.162,-2	.282,-2	.160,-2	.231,-2	.186,-2
11	.110,-2	.205,-2	.189,-2	.172,-2	.212,-2
12	.110,-2	.188,-2	.151,-2	.155,-2	.199,-2
13	.126,-2	.176,-2	.136,-2	.126,-2	.190,-2
14	.117,-2	.121,-2	.945,-3	.734,-3	.151,-2
15	.100,-2	.958,-3	.820,-3	.605,-3	.117,-2
16	.101,-2	.965,-3	.127,-2	.778,-3	.115,-2
17	.127,-2	.970,-3	.146,-2	.880,-3	.113,-2
18	.165,-2	.107,-2	.165,-2	.184,-2	.122,-2
19	.144,-2	.110,-2	.115,-2	.183,-2	.135,-2
20	.104,-2	.889,-3	.496,-3	.840,-3	.111,-2
21	.112,-2	.716,-3	.508,-3	.715,-3	.899,-3
22	.918,-3	.560,-3	.665,-3	.474,-3	.104,-2
23	.644,-3	.100,-2	.741,-3	.651,-3	.913,-3
24	.718,-3	.128,-2	.690,-3	.691,-3	.860,-3
25	.692,-3	.734,-3	.643,-3	.556,-3	.797,-3
26	.821,-3	.611,-3	.809,-3	.700,-3	.653,-3
27	.664,-3	.719,-3	.706,-3	.820,-3	.712,-3
28	.571,-3	.671,-3	.607,-3	.581,-3	.797,-3
29	.480,-3	.604,-3	.534,-3	.517,-3	.804,-3
30	.345,-3	.332,-3	.380,-3	.433,-3	.685,-3
31	.479,-3	.430,-3	.401,-3	.419,-3	.488,-3
32	.504,-3	.406,-3	.358,-3	.394,-3	.447,-3
33	.577,-3	.333,-3	.242,-3	.396,-3	.496,-3
34	.465,-3	.335,-3	.271,-3	.309,-3	.412,-3
35	.378,-3	.113,-3	.327,-3	.269,-3	.400,-3
36	.407,-3	.104,-3	.299,-3	.340,-3	.410,-3
37	.544,-3	.252,-3	.246,-3	.401,-3	.345,-3
38	.284,-3	.251,-3	.201,-3	.349,-3	.260,-3
39	.223,-3	.215,-3	.354,-3	.309,-3	.245,-3
40	.295,-3	.270,-3	.365,-3	.378,-3	.265,-3
41	.252,-3	.355,-3	.317,-3	.322,-3	.374,-3
42	.194,-3	.341,-3	.311,-3	.308,-3	.405,-3
43	.191,-3	.253,-3	.267,-3	.260,-3	.419,-3
44	.195,-3	.224,-3	.266,-3	.301,-3	.358,-3
45	.261,-3	.209,-3	.206,-3	.319,-3	.311,-3
46	.292,-3	.194,-3	.212,-3	.214,-3	.265,-3
47	.260,-3	.123,-3	.248,-3	.130,-3	.249,-3
48	.253,-3	.247,-3	.225,-3	.114,-3	.316,-3
49	.258,-3	.276,-3	.196,-3	.896,-4	.325,-3
50	.291,-3	.291,-3	.260,-3	.111,-3	.240,-3
51	.244,-3	.251,-3	.240,-3	.220,-3	.138,-3
52	.189,-3	.227,-3	.135,-3	.270,-3	.166,-3
53	.222,-3	.269,-3	.171,-3	.215,-3	.319,-3
54	.229,-3	.253,-3	.171,-3	.159,-3	.358,-3
55	.274,-3	.258,-3	.160,-3	.167,-3	.319,-3
56	.222,-3	.197,-3	.267,-3	.155,-3	.281,-3
57	.149,-3	.242,-3	.239,-3	.124,-3	.217,-3
58	.131,-3	.227,-3	.160,-3	.137,-3	.209,-3
59	.130,-3	.158,-3	.240,-3	.162,-3	.246,-3
60	.150,-3	.141,-3	.261,-3	.145,-3	.269,-3

Run No. 32; v component

	Anemometer Position Number				
N	1	2	3	4	5
00	.182,-2	.402,-2	.188,-2	.143,-2	.132,-2
01	.173,-2	.237,-2	.179,-2	.149,-2	.118,-2
02	.115,-2	.927,-3	.113,-2	.122,-2	.800,-3
03	.500,-3	.652,-3	.676,-3	.710,-3	.604,-3
04	.356,-3	.472,-3	.561,-3	.570,-3	.599,-3
05	.476,-3	.499,-3	.404,-3	.385,-3	.427,-3
06	.500,-3	.620,-3	.523,-3	.482,-3	.484,-3
07	.451,-3	.480,-3	.472,-3	.481,-3	.705,-3
08	.461,-3	.482,-3	.468,-3	.477,-3	.698,-3
09	.504,-3	.406,-3	.524,-3	.386,-3	.559,-3
10	.362,-3	.378,-3	.508,-3	.412,-3	.495,-3
11	.451,-3	.581,-3	.397,-3	.533,-3	.445,-3
12	.470,-3	.353,-3	.728,-3	.442,-3	.311,-3
13	.394,-3	.315,-3	.586,-3	.441,-3	.413,-3
14	.351,-3	.304,-3	.407,-3	.458,-3	.540,-3
15	.425,-3	.367,-3	.540,-3	.333,-3	.653,-3
16	.459,-3	.490,-3	.585,-3	.277,-3	.478,-3
17	.440,-3	.414,-3	.465,-3	.234,-3	.291,-3
18	.549,-3	.279,-3	.509,-3	.320,-3	.305,-3
19	.495,-3	.298,-3	.491,-3	.310,-3	.370,-3
20	.511,-3	.321,-3	.344,-3	.308,-3	.400,-3
21	.387,-3	.334,-3	.571,-3	.317,-3	.578,-3
22	.382,-3	.403,-3	.576,-3	.334,-3	.542,-3
23	.475,-3	.480,-3	.488,-3	.327,-3	.540,-3
24	.342,-3	.355,-3	.572,-3	.311,-3	.425,-3
25	.284,-3	.362,-3	.543,-3	.270,-3	.495,-3
26	.352,-3	.340,-3	.370,-3	.200,-3	.356,-3
27	.358,-3	.370,-3	.278,-3	.257,-3	.302,-3
28	.340,-3	.340,-3	.337,-3	.290,-3	.330,-3
29	.339,-3	.355,-3	.337,-3	.343,-3	.333,-3
30	.271,-3	.257,-3	.333,-3	.305,-3	.202,-3
31	.282,-3	.234,-3	.305,-3	.200,-3	.215,-3
32	.407,-3	.282,-3	.304,-3	.186,-3	.237,-3
33	.440,-3	.212,-3	.322,-3	.241,-3	.320,-3
34	.403,-3	.254,-3	.349,-3	.201,-3	.345,-3
35	.476,-3	.244,-3	.245,-3	.192,-3	.321,-3
36	.352,-3	.197,-3	.234,-3	.181,-3	.234,-3
37	.227,-3	.159,-3	.294,-3	.154,-3	.234,-3
38	.244,-3	.149,-3	.204,-3	.209,-3	.377,-3
39	.321,-3	.201,-3	.220,-3	.184,-3	.339,-3
40	.358,-3	.281,-3	.244,-3	.153,-3	.376,-3
41	.333,-3	.403,-3	.303,-3	.154,-3	.253,-3
42	.376,-3	.305,-3	.348,-3	.162,-3	.330,-3
43	.377,-3	.255,-3	.342,-3	.217,-3	.404,-3
44	.306,-3	.183,-3	.242,-3	.244,-3	.349,-3
45	.359,-3	.273,-3	.238,-3	.201,-3	.241,-3
46	.294,-3	.347,-3	.250,-3	.157,-3	.317,-3
47	.315,-3	.355,-3	.184,-3	.184,-3	.330,-3
48	.429,-3	.290,-3	.207,-3	.219,-3	.302,-3
49	.476,-3	.219,-3	.215,-3	.162,-3	.377,-3
50	.332,-3	.191,-3	.232,-3	.157,-3	.333,-3
51	.288,-3	.228,-3	.214,-3	.204,-3	.245,-3
52	.309,-3	.253,-3	.276,-3	.240,-3	.244,-3
53	.400,-3	.244,-3	.256,-3	.247,-3	.215,-3
54	.414,-3	.269,-3	.188,-3	.259,-3	.201,-3
55	.394,-3	.323,-3	.173,-3	.233,-3	.227,-3
56	.339,-3	.345,-3	.219,-3	.147,-3	.351,-3
57	.314,-3	.277,-3	.233,-3	.143,-3	.422,-3
58	.242,-3	.225,-3	.207,-3	.144,-3	.354,-3
59	.226,-3	.240,-3	.245,-3	.179,-4	.372,-3
60	.200,-3	.235,-3	.180,-3	.356,-4	.367,-3

un No. 32; w component

N	Anemometer Position Number 1	2	3	4	5
00	.[illegible],-3	.[illegible],-3	.133,-3	.143,-3	.157,-3
01	.280,-3	.[illegible],-3	.191,-3	.[illegible],-3	.170,-3
02	.271,-3	.[illegible],-3	.[illegible],-3	.210,-3	.213,-3
03	.268,-3	.[illegible],-3	.[illegible],-3	.[illegible],-3	.[illegible],-3
04	.310,-3	.[illegible],-3	.[illegible],-3	.[illegible],-3	.[illegible],-3
05	.[illegible],-3	.[illegible],-3	.[illegible],-3	.[illegible],-3	.178,-3
06	.[illegible],-3	.[illegible],-3	.[illegible],-3	.[illegible],-3	.[illegible],-3
07	.[illegible],-3	.[illegible],-3	.[illegible],-3	.[illegible],-3	.351,-3
08	.[illegible],-3	.[illegible],-3	.[illegible],-3	.[illegible],-4	.[illegible],-3
09	.[illegible],-3	.[illegible],-3	.[illegible],-3	.[illegible],-3	.[illegible],-3
10	.[illegible],-3	.[illegible],-3	.[illegible],-3	.[illegible],-3	.[illegible],-3
11	.[illegible],-3	.[illegible],-3	.[illegible],-3	.[illegible],-3	.[illegible],-3
12	.[illegible],-3	.[illegible],-3	.[illegible],-3	.[illegible],-3	.[illegible],-3
13	.[illegible],-3	.[illegible],-3	.[illegible],-3	.[illegible],-3	.[illegible],-3
14	.[illegible],-3	.[illegible],-3	.[illegible],-3	.[illegible],-3	.[illegible],-3
15	.[illegible],-3	.[illegible],-3	.[illegible],-3	.[illegible],-3	.[illegible],-3
16	.[illegible],-3	.[illegible],-3	.[illegible],-3	.[illegible],-3	.[illegible],-3
17	.[illegible],-3	.[illegible],-3	.[illegible],-3	.[illegible],-3	.[illegible],-3
18	.[illegible],-3	.[illegible],-3	.[illegible],-3	.[illegible],-3	.[illegible],-3
19	.[illegible],-3	.[illegible],-3	.[illegible],-3	.[illegible],-3	.[illegible],-3
20	.[illegible],-3	.[illegible],-3	.[illegible],-3	.[illegible],-3	.[illegible],-3
21	.[illegible],-3	.[illegible],-3	.[illegible],-3	.[illegible],-3	.[illegible],-3
22	.[illegible],-3	.[illegible],-3	.[illegible],-3	.[illegible],-3	.[illegible],-3
23	.[illegible],-3	.[illegible],-3	.[illegible],-3	.[illegible],-3	.[illegible],-3
24	.[illegible],-3	.[illegible],-3	.[illegible],-3	.[illegible],-3	.[illegible],-3
25	.[illegible],-3	.[illegible],-3	.[illegible],-3	.[illegible],-3	.[illegible],-3
26	.[illegible],-3	.[illegible],-3	.[illegible],-3	.[illegible],-3	.[illegible],-3
27	.[illegible],-3	.[illegible],-3	.[illegible],-3	.[illegible],-3	.[illegible],-3
28	.[illegible],-3	.[illegible],-3	.[illegible],-3	.[illegible],-3	.[illegible],-3
29	.[illegible],-3	.[illegible],-3	.[illegible],-3	.[illegible],-3	.[illegible],-3
30	.[illegible],-3	.[illegible],-3	.[illegible],-3	.[illegible],-3	.[illegible],-3
31	.[illegible],-3	.[illegible],-3	.[illegible],-3	.[illegible],-3	.[illegible],-3
32	.[illegible],-3	.[illegible],-3	.[illegible],-3	.[illegible],-3	.[illegible],-3
33	.[illegible],-3	.[illegible],-3	.[illegible],-3	.[illegible],-4	.[illegible],-3
34	.[illegible],-3	.[illegible],-3	.[illegible],-3	.[illegible],-3	.[illegible],-3
35	.[illegible],-3	.[illegible],-3	.[illegible],-3	.[illegible],-3	.[illegible],-4
36	.[illegible],-3	.[illegible],-3	.[illegible],-3	.[illegible],-3	.[illegible],-3
37	.[illegible],-3	.[illegible],-3	.[illegible],-3	.[illegible],-3	.[illegible],-3
38	.[illegible],-3	.[illegible],-3	.[illegible],-3	.[illegible],-3	.[illegible],-3
39	.[illegible],-3	.[illegible],-3	.[illegible],-3	.[illegible],-3	.[illegible],-3
40	.[illegible],-3	.[illegible],-3	.[illegible],-3	.[illegible],-3	.[illegible],-3
41	.[illegible],-3	.[illegible],-3	.[illegible],-3	.[illegible],-3	.[illegible],-3
42	.[illegible],-3	.[illegible],-3	.[illegible],-3	.[illegible],-4	.[illegible],-3
43	.[illegible],-3	.[illegible],-3	.[illegible],-3	.[illegible],-4	.[illegible],-3
44	.[illegible],-3	.[illegible],-3	.[illegible],-3	.[illegible],-3	.[illegible],-3
45	.[illegible],-3	.[illegible],-3	.[illegible],-3	.[illegible],-3	.[illegible],-4
46	.[illegible],-3	.[illegible],-3	.[illegible],-3	.[illegible],-3	.[illegible],-3
47	.[illegible],-3	.[illegible],-3	.[illegible],-3	.[illegible],-3	.[illegible],-3
48	.[illegible],-3	.[illegible],-3	.[illegible],-3	.[illegible],-3	.[illegible],-3
49	.[illegible],-3	.[illegible],-3	.[illegible],-3	.[illegible],-3	.[illegible],-3
50	.[illegible],-3	.[illegible],-3	.[illegible],-3	.[illegible],-3	.[illegible],-3
51	.[illegible],-3	.[illegible],-3	.[illegible],-3	.[illegible],-3	.[illegible],-3
52	.[illegible],-3	.[illegible],-3	.[illegible],-3	.[illegible],-3	.[illegible],-3
53	.[illegible],-3	.[illegible],-3	.[illegible],-3	.[illegible],-3	.[illegible],-3
54	.[illegible],-3	.[illegible],-3	.[illegible],-3	.[illegible],-3	.[illegible],-3
55	.[illegible],-3	.[illegible],-3	.[illegible],-3	.[illegible],-3	.[illegible],-3
56	.[illegible],-3	.[illegible],-3	.[illegible],-3	.[illegible],-3	.[illegible],-3
57	.[illegible],-3	.[illegible],-3	.[illegible],-3	.[illegible],-3	.[illegible],-3
58	.[illegible],-3	.[illegible],-3	.[illegible],-3	.[illegible],-4	.[illegible],-3
59	.[illegible],-3	.[illegible],-3	.[illegible],-3	.[illegible],-3	.[illegible],-3
60	.[illegible],-3	.[illegible],-3	.[illegible],-3	.[illegible],-3	.[illegible],-4

Run No. 35a; u component

N	Anemometer Position Number 1	2	3	4	5
00	.986,-1	.143	.113	.151	.179
01	.766,-1	.816,-1	.662,-1	.877,-1	.106
02	.582,-1	.304,-1	.293,-1	.312,-1	.436,-1
03	.371,-1	.242,-1	.245,-1	.249,-1	.308,-1
04	.197,-1	.167,-1	.180,-1	.231,-1	.276,-1
05	.182,-1	.124,-1	.176,-1	.171,-1	.269,-1
06	.177,-1	.115,-1	.187,-1	.145,-1	.179,-1
07	.162,-1	.874,-2	.125,-1	.166,-1	.159,-1
08	.154,-1	.662,-2	.795,-2	.143,-1	.146,-1
09	.137,-1	.720,-2	.850,-2	.130,-1	.139,-1
10	.125,-1	.854,-2	.691,-2	.111,-1	.126,-1
11	.824,-2	.839,-2	.693,-2	.109,-1	.113,-1
12	.591,-2	.7[illegible],-2	.696,-2	.111,-1	.100,-1
13	.691,-2	.656,-2	.452,-2	.997,-2	.127,-1
14	.801,-2	.540,-2	.512,-2	.653,-2	.140,-1
15	.933,-2	.664,-2	.595,-2	.586,-2	.112,-1
16	.928,-2	.630,-2	.569,-2	.686,-2	.887,-2
17	.677,-2	.475,-2	.490,-2	.681,-2	.789,-2
18	.467,-2	.564,-2	.400,-2	.642,-2	.680,-2
19	.485,-2	.694,-2	.411,-2	.563,-2	.514,-2
20	.507,-2	.540,-2	.412,-2	.476,-2	.450,-2
21	.501,-2	.465,-2	.[illegible],-2	.442,-2	.541,-2
22	.457,-2	.445,-2	.[illegible],-	.409,-2	.558,-2
23	.569,-2	.[illegible],-2	.289,-2	.425,-2	.520,-2
24	.485,-2	.[illegible],-2	.300,-2	.315,-2	.594,-2
25	.391,-2	.397,-2	.364,-2	.334,-2	.531,-2
26	.369,-2	.341,-2	.317,-2	.297,-2	.384,-2
27	.320,-2	.312,-2	.274,-2	.246,-2	.305,-2
28	.308,-2	.254,-2	.214,-2	.282,-2	.326,-2
29	.254,-2	.262,-2	.175,-2	.342,-2	.300,-2
30	.293,-2	.276,-2	.169,-2	.266,-2	.233,-2
31	.268,-2	.246,-2	.152,-2	.134,-2	.300,-2
32	.401,-2	.194,-2	.152,-2	.159,-2	.[illegible],-2
33	.312,-2	.156,-2	.186,-2	.247,-2	.290,-2
34	.254,-2	.190,-2	.186,-2	.239,-2	.332,-2
35	.248,-2	.186,-2	.201,-2	.179,-2	.286,-2
36	.250,-2	.151,-2	.104,-2	.141,-2	.218,-2
37	.249,-2	.170,-2	.125,-2	.130,-2	.281,-2
38	.254,-2	.180,-2	.111,-2	.125,-2	.258,-2
39	.217,-2	.173,-2	.122,-2	.109,-2	.179,-2
40	.117,-2	.163,-2	.127,-2	.120.-2	.207,-2
41	.113,-2	.157,-2	.149,-2	.112,-2	.213,-2
42	.105,-2	.157,-2	.155,-2	.103,-2	.211,-2
43	.109,-2	.140,-2	.124,-2	.125,-2	.223,-2
44	.158,-2	.126,-2	.140,-2	.145,-2	.222,-2
45	.100,-2	.116,-2	.127,-2	.127,-2	.220,-2
46	.154,-2	.135,-2	.115,-2	.107,-2	.178,-2
47	.151,-2	.102,-2	.966,-3	.100,-2	.158,-2
48	.179,-2	.103,-2	.967,-3	.736,-3	.108,-2
49	.155,-2	.128,-2	.107,-2	.847,-3	.172,-2
50	.121,-2	.121,-2	.101,-2	.[illegible],-3	.165,-2
51	.125,-2	.111,-2	.[illegible],-3	.724,-3	.110,-2
52	.113,-2	.109,-2	.[illegible],-3	.714,-3	.172,-2
53	.109,-2	.105,-2	.[illegible],-3	.[illegible],-3	.176,-2
54	.176,-2	.135,-2	.[illegible],-3	.[illegible],-3	.198,-2
55	.159,-2	.[illegible],-3	.710,-3	.740,-3	.[illegible],-2
56	.135,-2	.974,-3	.618,-3	.945,-3	.162,-2
57	.164,-2	.857,-3	.695,-3	.882,-3	.194,-2
58	.157,-2	.820,-3	.808,-3	.901,-3	.228,-2
59	.121,-2	.990,-3	.751,-3	.757,-3	.181,-2
60	.125,-2	.912,-3	.481,-3	.485,-3	.186,-2



Run No. 35a; v component

N	Anemometer Position Number 1	2	3	4	5
00	.244,-1	.277,-1	.146,-1	.236,-1	.205,-1
01	.139,-1	.199,-1	.885,-2	.141,-1	.129,-1
02	.504,-2	.500,-2	.350,-2	.550,-2	.524,-2
03	.410,-2	.351,-2	.327,-2	.351,-2	.313,-2
04	.337,-2	.310,-2	.281,-2	.254,-2	.400,-2
05	.359,-2	.289,-2	.284,-2	.279,-2	.425,-2
06	.340,-2	.272,-2	.415,-2	.327,-2	.346,-2
07	.264,-2	.300,-2	.375,-2	.380,-2	.292,-2
08	.440,-2	.328,-2	.354,-2	.371,-2	.201,-2
09	.496,-2	.296,-2	.248,-2	.196,-2	.212,-2
10	.346,-2	.256,-2	.230,-2	.312,-2	.345,-2
11	.396,-2	.252,-2	.310,-2	.286,-2	.339,-2
12	.391,-2	.278,-2	.285,-2	.197,-2	.252,-2
13	.410,-2	.254,-2	.230,-2	.219,-2	.340,-2
14	.240,-2	.342,-2	.244,-2	.287,-2	.269,-2
15	.310,-2	.305,-2	.213,-2	.349,-2	.298,-2
16	.457,-2	.247,-2	.215,-2	.325,-2	.196,-2
17	.439,-2	.255,-2	.191,-2	.249,-2	.197,-2
18	.314,-2	.256,-2	.189,-2	.256,-2	.211,-2
19	.249,-2	.209,-2	.253,-2	.253,-2	.217,-2
20	.204,-2	.224,-2	.280,-2	.251,-2	.259,-2
21	.282,-2	.240,-2	.307,-2	.214,-2	.342,-2
22	.226,-2	.233,-2	.375,-2	.201,-2	.301,-2
23	.258,-2	.238,-2	.311,-2	.235,-2	.220,-2
24	.306,-2	.202,-2	.205,-2	.216,-2	.227,-2
25	.330,-2	.190,-2	.184,-2	.256,-2	.219,-2
26	.287,-2	.176,-2	.182,-2	.204,-2	.214,-2
27	.247,-2	.184,-2	.145,-2	.198,-2	.217,-2
28	.280,-2	.156,-2	.127,-2	.193,-2	.187,-2
29	.249,-2	.166,-2	.120,-2	.158,-2	.190,-2
30	.187,-2	.164,-2	.123,-2	.157,-2	.205,-2
31	.189,-2	.139,-2	.150,-2	.175,-2	.207,-2
32	.165,-2	.147,-2	.129,-2	.181,-2	.244,-2
33	.208,-2	.174,-2	.107,-2	.157,-2	.200,-2
34	.314,-2	.179,-2	.136,-2	.184,-2	.164,-2
35	.274,-2	.175,-2	.178,-2	.165,-2	.138,-2
36	.211,-2	.144,-2	.142,-2	.116,-2	.168,-2
37	.223,-2	.216,-2	.149,-2	.109,-2	.225,-2
38	.256,-2	.174,-2	.123,-2	.922,-3	.224,-2
39	.245,-2	.151,-2	.146,-2	.796,-3	.240,-2
40	.274,-2	.187,-2	.150,-2	.674,-3	.845,-2
41	.249,-2	.230,-2	.137,-2	.774,-3	.197,-2
42	.289,-2	.235,-2	.122,-2	.875,-3	.170,-2
43	.207,-2	.181,-2	.118,-2	.984,-3	.156,-2
44	.231,-2	.168,-2	.130,-2	.978,-3	.131,-2
45	.227,-2	.186,-2	.174,-2	.896,-3	.145,-2
46	.210,-2	.146,-2	.183,-2	.149,-2	.170,-2
47	.233,-2	.135,-2	.188,-2	.160,-2	.140,-2
48	.250,-2	.188,-2	.168,-2	.117,-2	.125,-2
49	.264,-2	.196,-2	.147,-2	.988,-3	.134,-2
50	.295,-2	.151,-2	.149,-2	.108,-2	.152,-2
51	.337,-2	.141,-2	.138,-2	.158,-2	.140,-2
52	.310,-2	.180,-2	.157,-2	.174,-2	.129,-2
53	.232,-2	.209,-2	.116,-2	.172,-2	.178,-2
54	.155,-2	.181,-2	.827,-3	.136,-2	.216,-2
55	.202,-2	.202,-2	.964,-3	.113,-2	.168,-2
56	.202,-2	.180,-2	.878,-3	.118,-2	.150,-2
57	.142,-2	.134,-2	.111,-2	.104,-2	.171,-2
58	.139,-2	.104,-2	.133,-2	.119,-2	.148,-2
59	.125,-2	.794,-3	.959,-3	.957,-3	.104,-2
60	.974,-3	.566,-3	.694,-3	.577,-3	.987,-3

Run No. 35a; w component

	Anemometer Position Number				
N	1	2	3	4	5
00	.151,-2	.749,-3	.175,-2	.922,-3	.194,-2
01	.170,-2	.873,-3	.191,-2	.139,-2	.222,-2
02	.211,-2	.117,-2	.206,-2	.198,-2	.205,-2
03	.250,-2	.156,-2	.231,-2	.179,-2	.169,-2
04	.229,-2	.152,-2	.199,-2	.187,-2	.166,-2
05	.200,-2	.137,-2	.174,-2	.208,-2	.166,-2
06	.232,-2	.129,-2	.207,-2	.201,-2	.109,-2
07	.212,-2	.894,-3	.206,-2	.177,-2	.885,-3
08	.195,-2	.122,-2	.160,-2	.140,-2	.116,-2
09	.200,-2	.164,-2	.134,-2	.127,-2	.146,-2
10	.207,-2	.159,-2	.135,-2	.118,-2	.135,-2
11	.198,-2	.170,-2	.127,-2	.120,-2	.965,-3
12	.166,-2	.169,-2	.165,-2	.175,-2	.101,-2
13	.171,-2	.146,-2	.180,-2	.181,-2	.126,-2
14	.144,-2	.128,-2	.164,-2	.164,-2	.128,-2
15	.137,-2	.972,-3	.145,-2	.140,-2	.148,-2
16	.150,-2	.102,-2	.155,-2	.114,-2	.166,-2
17	.184,-2	.114,-2	.144,-2	.138,-2	.149,-2
18	.174,-2	.129,-2	.165,-2	.155,-2	.121,-2
19	.140,-2	.136,-2	.154,-2	.112,-2	.153,-2
20	.152,-2	.159,-2	.115,-2	.111,-2	.113,-2
21	.178,-2	.129,-2	.107,-2	.132,-2	.858,-3
22	.140,-2	.102,-2	.151,-2	.141,-2	.986,-3
23	.114,-2	.798,-3	.145,-2	.107,-2	.109,-2
24	.144,-2	.774,-3	.175,-2	.111,-2	.948,-3
25	.160,-2	.951,-3	.159,-2	.135,-2	.108,-2
26	.190,-2	.879,-3	.105,-2	.113,-2	.135,-2
27	.194,-2	.682,-3	.100,-2	.113,-2	.141,-2
28	.200,-2	.577,-3	.976,-3	.140,-2	.130,-2
29	.197,-2	.869,-3	.110,-2	.155,-2	.120,-2
30	.155,-2	.680,-3	.141,-2	.124,-2	.106,-2
31	.145,-2	.909,-3	.123,-2	.107,-2	.988,-3
32	.160,-2	.904,-3	.141,-2	.107,-2	.990,-3
33	.125,-2	.107,-2	.107,-2	.125,-2	.142,-2
34	.118,-2	.125,-2	.102,-2	.151,-2	.100,-2
35	.150,-2	.102,-2	.119,-2	.147,-2	.126,-2
36	.227,-2	.914,-3	.145,-2	.137,-2	.153,-2
37	.175,-2	.109,-2	.124,-2	.144,-2	.137,-2
38	.100,-2	.116,-2	.970,-3	.109,-2	.106,-2
39	.145,-2	.124,-2	.120,-2	.944,-3	.754,-3
40	.154,-2	.118,-2	.156,-2	.889,-3	.697,-3
41	.160,-2	.969,-3	.176,-2	.101,-2	.601,-3
42	.167,-2	.926,-3	.119,-2	.841,-3	.798,-3
43	.142,-2	.104,-2	.146,-2	.612,-3	.102,-2
44	.176,-2	.122,-2	.112,-2	.692,-3	.109,-2
45	.152,-2	.151,-2	.949,-3	.849,-3	.886,-3
46	.222,-2	.151,-2	.119,-2	.107,-2	.693,-3
47	.250,-2	.114,-2	.116,-2	.878,-3	.741,-3
48	.166,-2	.859,-3	.166,-2	.774,-3	.968,-3
49	.156,-2	.798,-3	.195,-2	.850,-3	.997,-3
50	.139,-2	.967,-3	.147,-2	.994,-3	.968,-3
51	.107,-2	.101,-2	.118,-2	.107,-2	.109,-2
52	.104,-2	.104,-2	.117,-2	.117,-2	.123,-2
53	.129,-2	.909,-3	.124,-2	.107,-2	.110,-2
54	.174,-2	.887,-3	.870,-3	.969,-3	.692,-3
55	.212,-2	.991,-3	.913,-3	.104,-2	.540,-3
56	.187,-2	.109,-2	.109,-2	.997,-3	.751,-3
57	.175,-2	.129,-2	.108,-2	.996,-3	.780,-3
58	.168,-2	.119,-2	.109,-2	.114,-2	.948,-3
59	.117,-2	.105,-2	.885,-3	.988,-3	.930,-3
60	.102,-2	.972,-3	.645,-3	.786,-3	.755,-3

Run No. 36; u component

N	Anemometer Position Number 1	2	3	4	5
00	.140,-1	.170,-1	.151,-1	.132,-1	.115,-1
01	.822,-2	.101,-2	.098,-2	.101,-1	.707,-2
02	.410,-2	.491,-2	.704,-2	.788,-2	.836,-2
03	.401,-2	.999,-2	.845,-2	.725,-2	.652,-2
04	.319,-2	.147,-2	.856,-2	.711,-2	.612,-2
05	.220,-2	.189,-2	.140,-2	.[illegible],-2	.[illegible],-2
06	.178,-2	.157,-2	.136,-2	.[illegible],-2	.524,-2
07	.217,-2	.[illegible],-2	.[illegible],-2	.[illegible],-2	.721,-2
08	.240,-2	.141,-2	.110,-2	.[illegible],-2	.[illegible],-2
09	.[illegible],-2	.[illegible],-2	.[illegible],-2	.[illegible],-2	.[illegible],-2
10	.[illegible],-2	.[illegible],-2	.[illegible],-2	.[illegible],-2	.[illegible],-2
11	.[illegible],-2	.[illegible],-2	.[illegible],-2	.[illegible],-2	.[illegible],-2
12	.[illegible],-2	.[illegible],-2	.[illegible],-2	.[illegible],-2	.[illegible],-2
13	.[illegible],-2	.[illegible],-2	.[illegible],-2	.[illegible],-2	.[illegible],-2
14	.[illegible],-2	.[illegible],-2	.[illegible],-2	.[illegible],-2	.[illegible],-2
15	.[illegible],-3	.[illegible],-3	.[illegible],-3	.[illegible],-2	.[illegible],-2
16	.[illegible],-3	.[illegible],-3	.[illegible],-3	.[illegible],-2	.[illegible],-2
17	.[illegible],-3	.[illegible],-3	.[illegible],-3	.[illegible],-2	.[illegible],-2
18	.[illegible],-3	.[illegible],-3	.[illegible],-3	.[illegible],-3	.[illegible],-2
19	.[illegible],-3	.[illegible],-3	.[illegible],-3	.[illegible],-3	.[illegible],-3
20	.[illegible],-3	.[illegible],-3	.447,-3	.[illegible],-2	.[illegible],-2
21	.[illegible],-3	.[illegible],-3	.[illegible],-3	.[illegible],-2	.[illegible],-3
22	.[illegible],-3	.[illegible],-3	.[illegible],-3	.[illegible],-3	.[illegible],-3
23	.[illegible],-3	.[illegible],-3	.[illegible],-3	.[illegible],-3	.[illegible],-3
24	.[illegible],-3	.[illegible],-3	.[illegible],-3	.[illegible],-3	.[illegible],-2
25	.[illegible],-3	.[illegible],-3	.[illegible],-3	.[illegible],-3	.[illegible],-2
26	.[illegible],-3	.[illegible],-3	.[illegible],-3	.[illegible],-3	.[illegible],-3
27	.[illegible],-3	.[illegible],-3	.[illegible],-3	.[illegible],-3	.[illegible],-
28	.[illegible],-3	.[illegible],-3	.[illegible],-3	.[illegible],-3	.[illegible],-3
29	.[illegible],-3	.[illegible],-3	.[illegible],-3	.[illegible],-3	.[illegible],-3
30	.[illegible],-3	.[illegible],-3	.[illegible],-3	.[illegible],-3	.[illegible],-3
31	.[illegible],-3	.[illegible],-3	.[illegible],-3	.[illegible],-3	.[illegible],-3
32	.[illegible],-3	.[illegible],-3	.[illegible],-3	.[illegible],-3	.[illegible],-3
33	.[illegible],-3	.[illegible],-3	.[illegible],-3	.[illegible],-3	.[illegible],-3
34	.[illegible],-3	.[illegible],-3	.[illegible],-3	.[illegible],-3	.[illegible],-3
35	.[illegible],-3	.[illegible],-3	.[illegible],-3	.[illegible],-3	.[illegible],-3
36	.[illegible],-3	.[illegible],-3	.[illegible],-3	.[illegible],-3	.[illegible],-3
37	.[illegible],-3	.[illegible],-3	.[illegible],-3	.[illegible],-3	.[illegible],-3
38	.[illegible],-3	.[illegible],-3	.[illegible],-3	.[illegible],-3	.[illegible],-3
39	.[illegible],-3	.[illegible],-3	.[illegible],-3	.[illegible],-3	.[illegible],-3
40	.[illegible],-3	.[illegible],-3	.[illegible],-3	.[illegible],-3	.[illegible],-3
41	.[illegible],-3	.[illegible],-3	.[illegible],-3	.[illegible],-3	.[illegible],-3
42	.[illegible],-3	.[illegible],-3	.[illegible],-3	.[illegible],-3	.[illegible],-3
43	.[illegible],-3	.[illegible],-3	.[illegible],-4	.[illegible],-3	.[illegible],-3
44	.[illegible],-3	.[illegible],-3	.[illegible],-4	.[illegible],-	.[illegible],-3
45	.[illegible],-3	.[illegible],-3	.[illegible],-4	.[illegible],-3	.[illegible],-3
46	.[illegible],-3	.[illegible],-3	.[illegible],-3	.[illegible],-3	.[illegible],-3
47	.[illegible],-3	.[illegible],-3	.[illegible],-3	.[illegible],-3	.[illegible],-3
48	.[illegible],-3	.[illegible],-3	.[illegible],-3	.[illegible],-3	.[illegible],-3
49	.[illegible],-3	.[illegible],-3	.[illegible],-4	.[illegible],-3	.[illegible],-3
50	.[illegible],-3	.[illegible],-3	.[illegible],-4	.[illegible],-3	.[illegible],-3
51	.[illegible],-3	.[illegible],-3	.[illegible],-4	.[illegible],-3	.[illegible],-3
52	.[illegible],-3	.[illegible],-3	.[illegible],-4	.[illegible],-3	.[illegible],-3
53	.[illegible],-3	.[illegible],-3	.[illegible],-3	.[illegible],-3	.[illegible],-3
54	.[illegible],-3	.[illegible],-3	.[illegible],-4	.[illegible],-3	.[illegible],-3
55	.[illegible],-3	.[illegible],-3	.[illegible],-4	.[illegible],-3	.[illegible],-3
56	.[illegible],-3	.[illegible],-3	.[illegible],-3	.[illegible],-3	.[illegible],-3
57	.[illegible],-3	.[illegible],-3	.[illegible],-4	.[illegible],-3	.[illegible],-3
58	.[illegible],-3	.[illegible],-3	.[illegible],-4	.[illegible],-3	.[illegible],-3
59	.[illegible],-3	.[illegible],-3	.[illegible],-4	.[illegible],-3	.[illegible],-3
60	.[illegible],-3	.[illegible],-4	.[illegible],-4	.[illegible],-4	.[illegible],-3

Run No. 36; v component

N	Anemometer Position Number 1	2	3	4	5
00	.144,-1	.175,-1	.204,-2	.121,-1	.709,-2
01	.102,-2	.665,-2	.441,-2	.[illegible],-2	.553,-2
02	.[illegible],-2	.956,-2	.709,-2	.[illegible],-2	.[illegible],-2
03	.[illegible],-2	.[illegible],-2	.441,-2	.[illegible],-2	.203,-2
04	.[illegible],-2	.[illegible],-2	.[illegible],-2	.[illegible],-2	.134,-2
05	.[illegible],-2	.[illegible],-2	.[illegible],-2	.[illegible],-2	.[illegible],-2
06	.[illegible],-2	.[illegible],-2	.[illegible],-2	.[illegible],-2	.[illegible],-2
07	.[illegible],-2	.[illegible],-2	.[illegible],-2	.[illegible],-2	.[illegible],-2
08	.[illegible],-2	.[illegible],-2	.[illegible],-2	.[illegible],-2	.[illegible],-2
09	.[illegible],-2	.[illegible],-2	.[illegible],-2	.[illegible],-2	.[illegible],-2
10	.[illegible],-2	.[illegible],-2	.[illegible],-2	.[illegible],-2	.[illegible],-2
11	.[illegible],-2	.[illegible],-2	.[illegible],-2	.[illegible],-2	.[illegible],-2
12	.[illegible],-2	.[illegible],-2	.[illegible],-2	.[illegible],-2	.[illegible],-2
13	.[illegible],-2	.[illegible],-2	.[illegible],-2	.[illegible],-2	.[illegible],-2
14	.[illegible],-2	.[illegible],-2	.[illegible],-2	.[illegible],-2	.[illegible],-2
15	.[illegible],-2	.[illegible],-2	.[illegible],-2	.[illegible],-2	.[illegible],-2
16	.[illegible],-2	.[illegible],-2	.[illegible],-2	.[illegible],-2	.[illegible],-2
17	.[illegible],-2	.[illegible],-2	.[illegible],-2	.[illegible],-2	.[illegible],-2
18	.[illegible],-2	.[illegible],-2	.[illegible],-2	.[illegible],-2	.[illegible],-2
19	.[illegible],-2	.[illegible],-2	.[illegible],-2	.[illegible],-2	.[illegible],-2
20	.[illegible],-2	.[illegible],-2	.[illegible],-2	.[illegible],-2	.[illegible],-2
21	.[illegible],-2	.[illegible],-2	.[illegible],-2	.[illegible],-2	.[illegible],-2
22	.[illegible],-2	.[illegible],-2	.[illegible],-2	.[illegible],-2	.[illegible],-2
23	.[illegible],-2	.[illegible],-2	.[illegible],-2	.[illegible],-2	.[illegible],-2
24	.[illegible],-2	.[illegible],-2	.[illegible],-2	.[illegible],-2	.[illegible],-2
25	.[illegible],-2	.[illegible],-2	.[illegible],-2	.[illegible],-2	.[illegible],-2
26	.[illegible],-2	.[illegible],-2	.[illegible],-2	.[illegible],-2	.[illegible],-2
27	.[illegible],-2	.[illegible],-2	.[illegible],-2	.[illegible],-2	.[illegible],-2
28	.[illegible],-2	.[illegible],-2	.[illegible],-2	.[illegible],-2	.[illegible],-2
29	.[illegible],-2	.[illegible],-2	.[illegible],-2	.[illegible],-2	.[illegible],-2
30	.[illegible],-2	.[illegible],-2	.[illegible],-2	.[illegible],-2	.[illegible],-2
31	.[illegible],-2	.[illegible],-2	.[illegible],-2	.[illegible],-2	.[illegible],-2
32	.[illegible],-2	.[illegible],-2	.[illegible],-2	.[illegible],-2	.[illegible],-2
33	.[illegible],-2	.[illegible],-2	.[illegible],-2	.[illegible],-2	.[illegible],-2
34	.[illegible],-2	.[illegible],-2	.[illegible],-2	.[illegible],-2	.[illegible],-2
35	.[illegible],-2	.[illegible],-2	.[illegible],-2	.[illegible],-2	.[illegible],-2
36	.[illegible],-2	.[illegible],-2	.[illegible],-2	.[illegible],-2	.[illegible],-2
37	.[illegible],-2	.[illegible],-2	.[illegible],-2	.[illegible],-2	.[illegible],-2
38	.[illegible],-2	.[illegible],-2	.[illegible],-2	.[illegible],-2	.[illegible],-2
39	.[illegible],-2	.[illegible],-2	.[illegible],-2	.[illegible],-2	.[illegible],-2
40	.[illegible],-2	.[illegible],-2	.[illegible],-2	.[illegible],-2	.[illegible],-2
41	.[illegible],-2	.[illegible],-2	.[illegible],-2	.[illegible],-2	.[illegible],-2
42	.[illegible],-2	.[illegible],-2	.[illegible],-2	.[illegible],-2	.[illegible],-2
43	.[illegible],-2	.[illegible],-2	.[illegible],-2	.[illegible],-2	.[illegible],-2
44	.[illegible],-2	.[illegible],-2	.[illegible],-2	.[illegible],-2	.[illegible],-2
45	.[illegible],-2	.[illegible],-2	.[illegible],-2	.[illegible],-2	.[illegible],-2
46	.[illegible],-2	.[illegible],-2	.[illegible],-2	.[illegible],-2	.[illegible],-2
47	.[illegible],-2	.[illegible],-2	.[illegible],-2	.[illegible],-2	.[illegible],-2
48	.[illegible],-2	.[illegible],-2	.[illegible],-2	.[illegible],-2	.[illegible],-2
49	.[illegible],-2	.[illegible],-2	.[illegible],-2	.[illegible],-2	.[illegible],-2
50	.[illegible],-2	.[illegible],-2	.[illegible],-2	.[illegible],-2	.[illegible],-2
51	.[illegible],-2	.[illegible],-2	.[illegible],-2	.[illegible],-2	.[illegible],-2
52	.[illegible],-2	.[illegible],-2	.[illegible],-2	.[illegible],-2	.[illegible],-2
53	.[illegible],-2	.[illegible],-2	.[illegible],-2	.[illegible],-2	.[illegible],-2
54	.[illegible],-2	.[illegible],-2	.[illegible],-2	.[illegible],-2	.[illegible],-2
55	.[illegible],-2	.[illegible],-2	.[illegible],-2	.[illegible],-2	.[illegible],-2
56	.[illegible],-2	.[illegible],-2	.[illegible],-2	.[illegible],-2	.[illegible],-2
57	.[illegible],-2	.[illegible],-2	.[illegible],-2	.[illegible],-2	.[illegible],-2
58	.[illegible],-2	.[illegible],-2	.[illegible],-2	.[illegible],-2	.[illegible],-2
59	.[illegible],-2	.[illegible],-2	.[illegible],-2	.[illegible],-2	.[illegible],-2
60	.[illegible],-2	.[illegible],-2	.[illegible],-2	.[illegible],-2	.[illegible],-2

Run No. 61 v component

N	Anemometer Position Number 1	2	3	4	5
00	.[illegible],-3	.[illegible],-3	.201,-3	.264,-3	.195,-3
01	.275,-3	.[illegible],-3	.180,-3	.406,-3	.194,-3
02	.252,-3	.177,-3	.167,-3	.442,-3	.202,-3
03	.[illegible],-3	.[illegible],-3	.[illegible],-3	.[illegible],-3	.[illegible],-3
04	.[illegible],-3	.[illegible],-3	.[illegible],-3	.[illegible],-3	.[illegible],-3
05	.[illegible],-3	.[illegible],-3	.[illegible],-3	.[illegible],-3	.[illegible],-3
06	.[illegible],-3	.[illegible],-3	.[illegible],-3	.[illegible],-3	.[illegible],-3
07	.[illegible],-3	.[illegible],-3	.[illegible],-3	.[illegible],-3	.[illegible],-3
08	.[illegible],-3	.[illegible],-3	.[illegible],-4	.[illegible],-3	.[illegible],-3
09	.424,-3	.[illegible],-3	.[illegible],-4	.[illegible],-3	.[illegible],-3
10	.[illegible],-3	.[illegible],-3	.[illegible],-4	.[illegible],-3	.[illegible],-3
11	.[illegible],-3	.[illegible],-3	.[illegible],-3	.[illegible],-3	.[illegible],-3
12	.[illegible],-3	.[illegible],-3	.[illegible],-3	.[illegible],-3	.[illegible],-3
13	.[illegible],-3	.[illegible],-3	.[illegible],-3	.[illegible],-3	.[illegible],-3
14	.[illegible],-3	.[illegible],-3	.[illegible],-3	.[illegible],-3	.[illegible],-3
15	.[illegible],-3	.[illegible],-3	.[illegible],-3	.[illegible],-3	.[illegible],-3
16	.[illegible],-3	.[illegible],-3	.[illegible],-3	.[illegible],-3	.[illegible],-3
17	.[illegible],-3	.[illegible],-3	.[illegible],-3	.[illegible],-3	.[illegible],-3
18	.[illegible],-3	.[illegible],-3	.[illegible],-3	.[illegible],-3	.[illegible],-3
19	.[illegible],-3	.[illegible],-3	.[illegible],-3	.[illegible],-3	.[illegible],-3
20	.[illegible],-3	.[illegible],-3	.[illegible],-3	.[illegible],-3	.[illegible],-3
21	.[illegible],-3	.[illegible],-3	.[illegible],-3	.[illegible],-3	.[illegible],-3
22	.[illegible],-3	.[illegible],-3	.[illegible],-3	.[illegible],-3	.[illegible],-3
23	.[illegible],-3	.[illegible],-3	.[illegible],-4	.[illegible],-3	.[illegible],-3
24	.[illegible],-3	.[illegible],-4	.[illegible],-4	.[illegible],-3	.[illegible],-3
25	.[illegible],-3	.[illegible],-4	.[illegible],-4	.[illegible],-3	.[illegible],-3
26	.[illegible],-3	.[illegible],-4	.[illegible],-4	.[illegible],-3	.[illegible],-3
27	.[illegible],-3	.[illegible],-3	.[illegible],-4	.[illegible],-3	.[illegible],-3
28	.[illegible],-3	.[illegible],-3	.[illegible],-3	.[illegible],-3	.[illegible],-4
29	.240,-3	.[illegible],-3	.[illegible],-3	.[illegible],-3	.[illegible],-4
30	.[illegible],-3	.[illegible],-3	.[illegible],-3	.[illegible],-3	.[illegible],-4
31	.[illegible],-3	.[illegible],-3	.[illegible],-3	.[illegible],-3	.[illegible],-3
32	.[illegible],-3	.[illegible],-3	.[illegible],-3	.[illegible],-3	.[illegible],-3
33	.[illegible],-3	.[illegible],-3	.[illegible],-3	.[illegible],-3	.[illegible],-4
34	.[illegible],-3	.[illegible],-3	.[illegible],-4	.[illegible],-3	.[illegible],-4
35	.[illegible],-3	.[illegible],-3	.[illegible],-3	.[illegible],-3	.[illegible],-4
36	.[illegible],-3	.[illegible],-4	.[illegible],-3	.[illegible],-3	.[illegible],-4
37	.[illegible],-3	.[illegible],-4	.[illegible],-4	.[illegible],-3	.[illegible],-3
38	.[illegible],-3	.[illegible],-3	.[illegible],-4	.[illegible],-3	.[illegible],-4
39	.[illegible],-3	.[illegible],-3	.[illegible],-4	.[illegible],-3	.[illegible],-4
40	.[illegible],-3	.[illegible],-3	.[illegible],-4	.[illegible],-3	.[illegible],-4
41	.[illegible],-3	.[illegible],-3	.[illegible],-4	.[illegible],-3	.[illegible],-4
42	.[illegible],-3	.[illegible],-4	.[illegible],-4	.[illegible],-3	.[illegible],-4
43	.[illegible],-3	.[illegible],-3	.[illegible],-4	.[illegible],-3	.[illegible],-4
44	.[illegible],-3	.[illegible],-4	.[illegible],-4	.[illegible],-3	.[illegible],-4
45	.[illegible],-3	.[illegible],-4	.[illegible],-4	.[illegible],-3	.[illegible],-4
46	.[illegible],-3	.[illegible],-4	.[illegible],-4	.[illegible],-3	.[illegible],-3
47	.[illegible],-3	.[illegible],-3	.[illegible],-4	.[illegible],-3	.[illegible],-4
48	.[illegible],-3	.[illegible],-3	.[illegible],-4	.[illegible],-3	.[illegible],-4
49	.[illegible],-3	.[illegible],-3	.[illegible],-4	.[illegible],-3	.[illegible],-4
50	.[illegible],-3	.[illegible],-3	.[illegible],-4	.[illegible],-3	.[illegible],-4
51	.[illegible],-3	.[illegible],-3	.[illegible],-4	.[illegible],-3	.[illegible],-4
52	.[illegible],-3	.[illegible],-4	.[illegible],-3	.[illegible],-3	.[illegible],-4
53	.[illegible],-3	.[illegible],-4	.[illegible],-3	.[illegible],-3	.[illegible],-4
54	.[illegible],-3	.[illegible],-4	.[illegible],-4	.[illegible],-3	.[illegible],-4
55	.[illegible],-3	.[illegible],-3	.[illegible],-4	.[illegible],-3	.[illegible],-4
56	.[illegible],-3	.[illegible],-3	.[illegible],-4	.[illegible],-3	.[illegible],-3
57	.[illegible],-3	.[illegible],-3	.[illegible],-4	.[illegible],-3	.[illegible],-3
58	.[illegible],-3	.[illegible],-3	.[illegible],-3	.[illegible],-3	.[illegible],-4
59	.[illegible],-3	.[illegible],-4	.[illegible],-4	.[illegible],-3	.[illegible],-4
60	.[illegible],-3	.[illegible],-4	.[illegible],-4	.[illegible],-3	.[illegible],-4

Run No. 17; u Component

N	Anemometer Position Number 1	2	3	4	5
00	.71[illegible],-1	.5[illegible],-1	.542,-1	.502,-1	.725,-1
01	.65[illegible],-1	.6[illegible],-1	.624,-1	.104	.102
02	.11	.[illegible],-1	.[illegible],-1	.120	.120
03	.[illegible],-1	.565,-1	.540,-1	.[illegible],-1	.120
04	.542,-1	.[illegible],-1	.[illegible],-1	.[illegible],-1	.[illegible],-1
05	.401,-1	.225,-1	.[illegible],-1	.[illegible],-1	.[illegible],-1
06	.710,-1	.165,-1	.297,-1	.415,-1	.412,-1
07	.272,-1	.143,-1	.149,-1	.[illegible],-1	.[illegible],-1
08	.241,-1	.108,-1	.[illegible],-1	.[illegible],-1	.241,-1
09	.[illegible],-1	.102,-1	.[illegible],-1	.[illegible],-1	.[illegible],-1
10	.[illegible],-1	.101,-1	.[illegible],-1	.251,-1	.[illegible],-1
11	.174,-1	.119,-1	.187,-1	.175,-1	.15[illegible],-1
12	.10[illegible],-1	.[illegible],-2	.10[illegible],-1	.16[illegible],-1	.1[illegible],-1
13	.[illegible],-2	.[illegible],-2	.104,-1	.[illegible],-1	.1[illegible],-1
14	.[illegible],-2	.[illegible],-2	.101,-1	.[illegible],-1	.[illegible],-1
15	.14[illegible],-1	.[illegible],-2	.[illegible],-1	.[illegible],-1	.14[illegible],-1
16	.1[illegible],-1	.[illegible],-2	.[illegible],-1	.[illegible],-1	.11[illegible],-1
17	.[illegible],-2	.6[illegible],-2	.[illegible],-2	.[illegible],-2	.[illegible],-2
18	.[illegible],-2	.[illegible],-2	.[illegible],-2	.11[illegible],-1	.[illegible],-2
19	.[illegible],-2	.[illegible],-2	.[illegible],-2	.1[illegible],-1	.10[illegible],-1
20	.[illegible],-2	.[illegible],-2	.[illegible],-2	.150,-1	.[illegible],-2
21	.[illegible],-2	.[illegible],-2	.[illegible],-2	.[illegible],-2	.[illegible],-2
22	.[illegible],-2	.[illegible],-2	.[illegible],-2	.[illegible],-2	.[illegible],-2
23	.[illegible],-2	.[illegible],-2	.[illegible],-2	.[illegible],-2	.[illegible],-2
24	.[illegible],-2	.[illegible],-2	.[illegible],-2	.[illegible],-2	.[illegible],-2
25	.[illegible],-2	.[illegible],-2	.[illegible],-2	.[illegible],-2	.[illegible],-2
26	.[illegible],-2	.[illegible],-2	.[illegible],-2	.[illegible],-2	.[illegible],-2
27	.[illegible],-2	.[illegible],-2	.[illegible],-2	.771,-2	.[illegible],-2
28	.[illegible],-2	.[illegible],-2	.[illegible],-2	.[illegible],-2	.[illegible],-2
29	.[illegible],-2	.[illegible],-2	.[illegible],-2	.[illegible],-2	.[illegible],-2
30	.[illegible],-2	.[illegible],-2	.[illegible],-2	.[illegible],-2	.[illegible],-2
31	.[illegible],-2	.[illegible],-2	.[illegible],-2	.[illegible],-2	.[illegible],-2
32	.[illegible],-2	.[illegible],-2	.[illegible],	.[illegible],-2	.[illegible],-2
33	.[illegible],-2	.[illegible],-2	.[illegible],-2	.[illegible],-2	.[illegible],-2
34	.[illegible],-2	.[illegible],-2	.[illegible],-2	.[illegible],-2	.[illegible],-2
35	.[illegible],-2	.[illegible],-2	.[illegible],-2	.[illegible],-2	.[illegible],-2
36	.[illegible],-2	.[illegible],-2	.[illegible],-2	.[illegible],-2	.[illegible],-2
37	.[illegible],-2	.[illegible],-2	.[illegible],-2	.[illegible],-2	.[illegible],-2
38	.[illegible],-2	.[illegible],-2	.[illegible],-2	.[illegible],-2	.[illegible],-2
39	.[illegible],-2	.[illegible],-2	.[illegible],-2	.[illegible],-2	.[illegible],-2
40	.272,-2	.24[illegible],-2	.244,-2	.2[illegible],-2	.[illegible],-2
41	.2[illegible],-2	.[illegible],-2	.[illegible],-2	.[illegible],-2	.[illegible],-2
42	.[illegible],-2	.[illegible],-2	.[illegible],-2	.[illegible],-2	.[illegible],-2
43	.[illegible],-2	.1[illegible],-2	.[illegible],-2	.[illegible],-2	.[illegible],-2
44	.[illegible],-2	.[illegible],-2	.[illegible],-2	.[illegible],-2	.[illegible],-2
45	.[illegible],-2	.[illegible],-2	.[illegible],-2	.[illegible],-2	.[illegible],-2
46	.[illegible],-2	.[illegible],-2	.[illegible],-2	.[illegible],-2	.[illegible],-2
47	.[illegible],-2	.[illegible],-2	.[illegible],-2	.[illegible],-2	.[illegible],-2
48	.[illegible],-2	.[illegible],-2	.[illegible],-2	.[illegible],-2	.[illegible],-2
49	.[illegible],-2	.[illegible],-2	.[illegible],-2	.[illegible],-2	.[illegible],-2
50	.[illegible],-2	.[illegible],-2	.[illegible],-2	.[illegible],-2	.[illegible],-2
51	.[illegible],-2	.[illegible],-2	.[illegible],-2	.[illegible],-2	.[illegible],-2
52	.[illegible],-2	.[illegible],-2	.[illegible],-2	.[illegible],-2	.[illegible],-2
53	.[illegible],-2	.[illegible],-2	.[illegible],-2	.[illegible],-2	.[illegible],-2
54	.[illegible],-2	.[illegible],-2	.[illegible],-2	.[illegible],-2	.[illegible],-2
55	.[illegible],-2	.[illegible],-2	.[illegible],-2	.[illegible],-2	.[illegible],-2
56	.[illegible],-2	.[illegible],-2	.[illegible],-2	.[illegible],-2	.[illegible],-2
57	.[illegible],-2	.[illegible],-2	.[illegible],-2	.[illegible],-2	.[illegible],-2
58	.[illegible],-2	.[illegible],-2	.[illegible],-2	.[illegible],-2	.[illegible],-2
59	.[illegible],-2	.[illegible],-2	.[illegible],-2	.[illegible],-2	.[illegible],-2
60	.[illegible],-2	.[illegible],-3	.[illegible],-1	.[illegible],-2	.[illegible],-2

Table No. [illegible]

Average heat capacities, cal/deg

t, °C	1	2	3	4	5
0	.[illegible],-1	.2[illegible],-1	.[illegible],-1	.[illegible],-1	.[illegible],-1
01	.21[illegible],-1	.1[illegible],-1	.1[illegible],-1	.2[illegible],-1	.1[illegible],-1
02	.11[illegible],-1	.[illegible],-2	.[illegible],-2	.11[illegible],-1	.[illegible],-2
03	.1[illegible],-1	.[illegible],-2	.1[illegible],-1	.[illegible],-2	.[illegible],-2
04	.1[illegible],-1	.7[illegible],-2	.1[illegible],-1	.[illegible],-2	.121,-1
05	.1[illegible],-1	.[illegible],-2	.[illegible],-2	.1[illegible],-1	.1[illegible],-1
06	.1[illegible],-1	.[illegible],-2	.[illegible],-2	.1[illegible],-1	.1[illegible],-1
07	.1[illegible],-1	.[illegible],-2	.[illegible],-2	.[illegible],-2	.[illegible],-2
08	.[illegible],-2	.[illegible],-2	.[illegible],-2	.[illegible],-2	.[illegible],-2
09	.[illegible],-2	.[illegible],-2	.[illegible],-2	.[illegible],-2	.[illegible],-2
1	.[illegible],-2	.[illegible],-2	.[illegible],-2	.[illegible],-2	.[illegible],-2
11	.[illegible],-1	.[illegible],-2	.[illegible],-2	.[illegible],-2	.[illegible],-2
12	.[illegible],-2	.[illegible],-2	.[illegible],-2	.[illegible],-2	.[illegible],-2
13	.[illegible],-2	.[illegible],-2	.[illegible],-2	.[illegible],-1	.[illegible],-2
14	.[illegible],-2	.[illegible],-2	.[illegible],-2	.[illegible],-2	.[illegible],-2
15	.[illegible],-2	.[illegible],-2	.[illegible],-2	.[illegible],-2	.[illegible],-2
16	.[illegible],-2	.[illegible],-2	.[illegible],-2	.[illegible],-2	.[illegible],-2
17	.[illegible],-2	.[illegible],-2	.[illegible],-2	.[illegible],-2	.[illegible],-2
18	.[illegible],-2	.[illegible],-2	.[illegible],-2	.[illegible],-2	.[illegible],-2
19	.[illegible],-2	.[illegible],-2	.[illegible],-2	.[illegible],-2	.[illegible],-2
20	.[illegible],-2	.[illegible],-2	.[illegible],-2	.[illegible],-2	.[illegible],-2
21	.[illegible],-2	.[illegible],-2	.[illegible],-2	.[illegible],-2	.[illegible],-2
22	.[illegible],-2	.[illegible],-2	.[illegible],-2	.[illegible],-2	.[illegible],-2
23	.[illegible],-2	.[illegible],-2	.[illegible],-2	.[illegible],-2	.[illegible],-2
24	.[illegible],-2	.[illegible],-2	.[illegible],-2	.[illegible],-2	.[illegible],-2
25	.[illegible],-2	.[illegible],-2	.[illegible],-2	.[illegible],-2	.[illegible],-2
26	.[illegible],-2	.[illegible],-2	.[illegible],-2	.[illegible],-2	.[illegible],-2
27	.[illegible],-2	.[illegible],-2	.[illegible],-2	.[illegible],-2	.[illegible],-2
28	.[illegible],-2	.[illegible],-2	.[illegible],-2	.[illegible],-2	.[illegible],-2
29	.[illegible],-2	.[illegible],-2	.[illegible],-2	.[illegible],-2	.[illegible],-2
30	.[illegible],-2	.[illegible],-2	.[illegible],-2	.[illegible],-2	.[illegible],-2
31	.[illegible],-2	.[illegible],-2	.[illegible],-2	.[illegible],-2	.[illegible],-2
32	.[illegible],-2	.[illegible],-2	.[illegible],-2	.[illegible],-2	.[illegible],-2
33	.[illegible],-2	.[illegible],-2	.[illegible],-2	.[illegible],-2	.[illegible],-2
34	.[illegible],-2	.[illegible],-2	.[illegible],-2	.[illegible],-2	.[illegible],-2
35	.[illegible],-2	.[illegible],-2	.[illegible],-2	.[illegible],-2	.[illegible],-2
36	.[illegible],-2	.[illegible],-2	.[illegible],-2	.[illegible],-2	.[illegible],-2
37	.[illegible],-2	.[illegible],-2	.[illegible],-2	.[illegible],-2	.[illegible],-2
38	.[illegible],-2	.[illegible],-2	.[illegible],-2	.[illegible],-2	.[illegible],-2
39	.[illegible],-2	.[illegible],-2	.[illegible],-2	.[illegible],-2	.[illegible],-2
40	.[illegible],-2	.[illegible],-2	.[illegible],-2	.[illegible],-2	.[illegible],-2
41	.[illegible],-2	.[illegible],-2	.[illegible],-2	.[illegible],-2	.[illegible],-2
42	.[illegible],-2	.[illegible],-2	.[illegible],-2	.[illegible],-2	.[illegible],-2
43	.[illegible],-2	.[illegible],-2	.[illegible],-2	.[illegible],-2	.[illegible],-2
44	.[illegible],-2	.[illegible],-2	.[illegible],-2	.[illegible],-2	.[illegible],-2
45	.[illegible],-2	.[illegible],-2	.[illegible],-2	.[illegible],-2	.[illegible],-2
46	.[illegible],-2	.[illegible],-2	.[illegible],-2	.[illegible],-2	.[illegible],-2
47	.[illegible],-2	.[illegible],-2	.[illegible],-2	.[illegible],-2	.[illegible],-2
48	.[illegible],-2	.[illegible],-2	.[illegible],-2	.[illegible],-2	.[illegible],-2
49	.[illegible],-2	.[illegible],-2	.[illegible],-2	.[illegible],-2	.[illegible],-2
50	.[illegible],-2	.[illegible],-2	.[illegible],-2	.[illegible],-2	.[illegible],-2
51	.[illegible],-2	.[illegible],-2	.[illegible],-2	.[illegible],-2	.[illegible],-2
52	.[illegible],-2	.[illegible],-2	.[illegible],-2	.[illegible],-2	.[illegible],-2
53	.[illegible],-2	.[illegible],-2	.[illegible],-2	.[illegible],-2	.[illegible],-2
54	.[illegible],-2	.[illegible],-2	.[illegible],-2	.[illegible],-2	.[illegible],-2
55	.[illegible],-2	.[illegible],-2	.[illegible],-2	.[illegible],-2	.[illegible],-2
56	.[illegible],-2	.[illegible],-2	.[illegible],-2	.[illegible],-2	.[illegible],-2
57	.[illegible],-2	.[illegible],-2	.[illegible],-2	.[illegible],-2	.[illegible],-2
58	.[illegible],-2	.[illegible],-2	.[illegible],-2	.[illegible],-2	.[illegible],-2
59	.[illegible],-2	.[illegible],-2	.[illegible],-2	.[illegible],-2	.[illegible],-2
60	.[illegible],-2	.[illegible],-2	.[illegible],-2	.[illegible],-2	.[illegible],-2

Run No. 17; V component

N	Anemometer Position Number				
	1	2	3	4	5
00	.[illegible],-2	.[illegible],-2	.[illegible],-2	.[illegible],-2	.[illegible],-2
01	.[illegible],-2	.[illegible],-2	.[illegible],-2	.[illegible],-2	.[illegible],-2
02	.[illegible],-2	.[illegible],-2	.[illegible],-2	.[illegible],-2	.[illegible],-2
03	.[illegible],-2	.[illegible],-2	.[illegible],-2	.[illegible],-2	.[illegible],-2
04	.[illegible],-2	.[illegible],-2	.[illegible],-2	.[illegible],-2	.[illegible],-2
05	.[illegible],-2	.[illegible],-2	.[illegible],-2	.[illegible],-2	.[illegible],-2
06	.[illegible],-2	.[illegible],-2	.[illegible],-2	.[illegible],-2	.[illegible],-2
07	.[illegible],-2	.[illegible],-2	.[illegible],-2	.[illegible],-2	.[illegible],-2
08	.[illegible],-2	.[illegible],-2	.[illegible],-2	.[illegible],-2	.[illegible],-2
09	.[illegible],-2	.[illegible],-2	.[illegible],-2	.[illegible],-2	.[illegible],-2
10	.[illegible],-2	.[illegible],-2	.[illegible],-2	.[illegible],-2	.[illegible],-2
11	.[illegible],-2	.[illegible],-2	.[illegible],-2	.[illegible],-2	.[illegible],-2
12	.[illegible],-2	.[illegible],-2	.[illegible],-2	.[illegible],-2	.[illegible],-2
13	.[illegible],-2	.[illegible],-2	.[illegible],-2	.[illegible],-2	.[illegible],-2
14	.[illegible],-2	.[illegible],-2	.[illegible],-2	.[illegible],-2	.[illegible],-2
15	.[illegible],-2	.[illegible],-2	.[illegible],-2	.[illegible],-2	.[illegible],-2
16	.[illegible],-2	.[illegible],-2	.[illegible],-2	.[illegible],-2	.[illegible],-2
17	.[illegible],-2	.[illegible],-2	.[illegible],-2	.[illegible],-2	.[illegible],-2
18	.[illegible],-2	.[illegible],-2	.[illegible],-2	.[illegible],-2	.[illegible],-2
19	.[illegible],-2	.[illegible],-2	.[illegible],-2	.[illegible],-2	.[illegible],-2
20	.[illegible],-2	.[illegible],-2	.[illegible],-2	.[illegible],-2	.[illegible],-2
21	.[illegible],-2	.[illegible],-2	.[illegible],-2	.[illegible],-2	.[illegible],-2
22	.[illegible],-2	.[illegible],-2	.[illegible],-2	.[illegible],-2	.[illegible],-2
23	.[illegible],-2	.[illegible],-2	.[illegible],-2	.[illegible],-2	.[illegible],-2
24	.[illegible],-2	.[illegible],-2	.[illegible],-2	.[illegible],-2	.[illegible],-2
25	.[illegible],-2	.[illegible],-2	.[illegible],-2	.[illegible],-2	.[illegible],-2
26	.[illegible],-2	.[illegible],-2	.[illegible],-2	.[illegible],-2	.[illegible],-2
27	.[illegible],-2	.[illegible],-2	.[illegible],-2	.[illegible],-2	.[illegible],-2
28	.[illegible],-2	.[illegible],-2	.[illegible],-2	.[illegible],-2	.[illegible],-2
29	.[illegible],-2	.[illegible],-2	.[illegible],-2	.[illegible],-2	.[illegible],-2
30	.[illegible],-2	.[illegible],-2	.[illegible],-2	.[illegible],-2	.[illegible],-2
31	.[illegible],-2	.[illegible],-2	.[illegible],-2	.[illegible],-2	.[illegible],-2
32	.[illegible],-2	.[illegible],-2	.[illegible],-2	.[illegible],-2	.[illegible],-2
33	.[illegible],-2	.[illegible],-2	.[illegible],-2	.[illegible],-2	.[illegible],-2
34	.[illegible],-2	.[illegible],-2	.[illegible],-2	.[illegible],-2	.[illegible],-2
35	.[illegible],-2	.[illegible],-2	.[illegible],-2	.[illegible],-2	.[illegible],-2
36	.[illegible],-2	.[illegible],-2	.[illegible],-2	.[illegible],-2	.[illegible],-2
37	.[illegible],-2	.[illegible],-2	.[illegible],-2	.[illegible],-2	.[illegible],-2
38	.[illegible],-2	.[illegible],-2	.[illegible],-2	.[illegible],-2	.[illegible],-2
39	.[illegible],-2	.[illegible],-2	.[illegible],-2	.[illegible],-2	.[illegible],-2
40	.[illegible],-2	.[illegible],-2	.[illegible],-2	.[illegible],-2	.[illegible],-2
41	.[illegible],-2	.[illegible],-2	.[illegible],-2	.[illegible],-2	.[illegible],-2
42	.[illegible],-2	.[illegible],-2	.[illegible],-2	.[illegible],-2	.[illegible],-2
43	.[illegible],-2	.[illegible],-2	.[illegible],-2	.[illegible],-2	.[illegible],-2
44	.[illegible],-2	.[illegible],-2	.[illegible],-2	.[illegible],-2	.[illegible],-2
45	.[illegible],-2	.[illegible],-2	.[illegible],-2	.[illegible],-2	.[illegible],-2
46	.[illegible],-2	.[illegible],-2	.[illegible],-2	.[illegible],-2	.[illegible],-2
47	.[illegible],-2	.[illegible],-2	.[illegible],-2	.[illegible],-2	.[illegible],-2
48	.[illegible],-2	.[illegible],-2	.[illegible],-2	.[illegible],-2	.[illegible],-2
49	.[illegible],-2	.[illegible],-2	.[illegible],-2	.[illegible],-2	.[illegible],-2
50	.[illegible],-2	.[illegible],-2	.[illegible],-2	.[illegible],-2	.[illegible],-2
51	.[illegible],-2	.[illegible],-2	.[illegible],-2	.[illegible],-2	.[illegible],-2
52	.[illegible],-2	.[illegible],-2	.[illegible],-2	.[illegible],-2	.[illegible],-2
53	.[illegible],-2	.[illegible],-2	.[illegible],-2	.[illegible],-2	.[illegible],-2
54	.[illegible],-2	.[illegible],-2	.[illegible],-2	.[illegible],-2	.[illegible],-2
55	.[illegible],-2	.[illegible],-2	.[illegible],-2	.[illegible],-2	.[illegible],-2
56	.[illegible],-2	.[illegible],-2	.[illegible],-2	.[illegible],-2	.[illegible],-2
57	.[illegible],-2	.[illegible],-2	.[illegible],-2	.[illegible],-2	.[illegible],-2
58	.[illegible],-2	.[illegible],-2	.[illegible],-2	.[illegible],-2	.[illegible],-2
59	.[illegible],-2	.[illegible],-2	.[illegible],-2	.[illegible],-2	.[illegible],-2
60	.[illegible],-2	.[illegible],-2	.[illegible],-2	.[illegible],-2	.[illegible],-2

Run No. 94: u component

	Anemometer Position Number				
N	1	2	3	4	5
00	.104	.805,-1	.101	.103	.822,-1
01	.110	.908,-1	.929,-1	.110	.109
02	.100	.509,-1	.945,-1	.856,-1	.778,-1
03	.680,-1	.418,-1	.509,-1	.582,-1	.430,-1
04	.421,-1	.477,-1	.520,-1	.404,-1	.345,-1
05	.405,-1	.509,-1	.395,-1	.419,-1	.250,-1
06	.361,-1	.105,-1	.277,-1	.341,-1	.266,-1
07	.249,-1	.330,-1	.227,-1	.303,-1	.238,-1
08	.241,-1	.155,-1	.196,-1	.239,-1	.205,-1
09	.141,-1	.147,-1	.157,-1	.277,-1	.21[illegible],-1
10	.139,-1	.121,-1	.119,-1	.224,-1	.200,-1
11	.160,-1	.337,-2	.104,-1	.244,-1	.208,-1
12	.103,-1	.347,-2	.537,-2	.205,-1	.129,-1
13	.105,-1	.201,-2	.100,-2	.154,-1	.101,-1
14	.106,-2	.[illegible],-2	.101,-1	.103,-1	.104,-1
15	.130,-1	.779,-2	.772,-2	.106,-1	.111,-1
16	.119,-1	.644,-2	.772,-2	.107,-1	.[illegible],-2
17	.120,-1	.[illegible],-2	.[illegible],-2	.120,-1	.[illegible],-2
18	.121,-1	.777,-2	.[illegible],-2	.141,-1	.644,-2
19	.[illegible],-2	.[illegible],-2	.776,-2	.109,-1	.700,-2
20	.745,-2	.710,-2	.[illegible],-2	.617,-2	.[illegible],-2
21	.[illegible],-2	.[illegible],-2	.757,-2	.425,-2	.[illegible],-2
22	.756,-2	.[illegible],-2	.[illegible],-2	.[illegible],-2	.[illegible],-2
23	.707,-2	.757,-2	.455,-2	.576,-2	.719,-2
24	.[illegible],-2	.[illegible],-2	.[illegible],-2	.[illegible],-2	.[illegible],-2
25	.[illegible],-2	.551,-2	.[illegible],-2	.503,-2	.337,-2
26	.[illegible],-2	.[illegible],-2	.[illegible],-2	.410,-2	.[illegible],-2
27	.[illegible],-2	.[illegible],-2	.442,-2	.[illegible],-2	.[illegible],-2
28	.[illegible],-2	.[illegible],-2	.[illegible],-2	.[illegible],-2	.[illegible],-2
29	.[illegible],-2	.[illegible],-2	.[illegible],-2	.[illegible],-2	.[illegible],-2
30	.[illegible],-2	.[illegible],-2	.[illegible],-2	.[illegible],-2	.[illegible],-2
31	.[illegible],-2	.[illegible],-2	.[illegible],-2	.[illegible],-2	.[illegible],-2
32	.[illegible],-2	.[illegible],-2	.[illegible],-2	.[illegible],-2	.[illegible],-2
33	.[illegible],-2	.[illegible],-2	.[illegible],-2	.[illegible],-2	.[illegible],-2
34	.[illegible],-2	.[illegible],-2	.[illegible],-2	.[illegible],-2	.[illegible],-2
35	.[illegible],-2	.[illegible],-2	.[illegible],-2	.[illegible],-2	.[illegible],-2
36	.[illegible],-2	.[illegible],-2	.[illegible],-2	.[illegible],-2	.[illegible],-2
37	.[illegible],-2	.[illegible],-2	.[illegible],-2	.[illegible],-2	.[illegible],-2
38	.[illegible],-2	.[illegible],-2	.[illegible],-2	.[illegible],-2	.[illegible],-2
39	.[illegible],-2	.[illegible],-2	.[illegible],-2	.[illegible],-2	.[illegible],-2
40	.[illegible],-2	.[illegible],-2	.[illegible],-2	.[illegible],-2	.[illegible],-2
41	.[illegible],-2	.[illegible],-2	.[illegible],-2	.[illegible],-2	.[illegible],-2
42	.[illegible],-2	.[illegible],-2	.[illegible],-2	.[illegible],-2	.[illegible],-2
43	.[illegible],-2	.[illegible],-2	.[illegible],-2	.[illegible],-2	.[illegible],-2
44	.[illegible],-2	.[illegible],-2	.[illegible],-3	.[illegible],-2	.[illegible],-2
45	.[illegible],-2	.[illegible],-2	.[illegible],-2	.[illegible],-2	.[illegible],-2
46	.[illegible],-2	.[illegible],-2	.[illegible],-2	.[illegible],-2	.[illegible],-2
47	.[illegible],-2	.[illegible],-2	.[illegible],-2	.[illegible],-2	.[illegible],-2
48	.[illegible],-2	.[illegible],-2	.[illegible],-2	.[illegible],-2	.[illegible],-2
49	.[illegible],-2	.[illegible],-2	.[illegible],-2	.[illegible],-2	.[illegible],-2
50	.[illegible],-2	.[illegible],-2	.[illegible],-2	.[illegible],-2	.[illegible],-2
51	.[illegible],-2	.[illegible],-2	.[illegible],-2	.[illegible],-2	.[illegible],-2
52	.[illegible],-2	.[illegible],-2	.[illegible],-2	.[illegible],-2	.[illegible],-2
53	.[illegible],-2	.[illegible],-2	.[illegible],-2	.[illegible],-2	.[illegible],-2
54	.[illegible],-2	.[illegible],-2	.[illegible],-2	.[illegible],-3	.[illegible],-2
55	.[illegible],-2	.[illegible],-2	.[illegible],-2	.[illegible],-2	.[illegible],-2
56	.[illegible],-2	.[illegible],-2	.[illegible],-2	.[illegible],-2	.[illegible],-2
57	.[illegible],-2	.[illegible],-2	.[illegible],-2	.[illegible],-2	.[illegible],-2
58	.[illegible],-2	.[illegible],-2	.[illegible],-2	.[illegible],-2	.[illegible],-2
59	.[illegible],-2	.[illegible],-3	.[illegible],-2	.[illegible],-2	.[illegible],-2
60	.[illegible],-2	.[illegible],-3	.[illegible],-3	.[illegible],-3	.[illegible],-2

Run No. 30; v component

	Anemometer Position Number				
H	1	2	3	4	5
00	.627,-2	.302,-2	.906,-2	.764,-2	.905,-2
01	.694,-2	.102,-1	.102,-1	.762,-2	.975,-2
02	.934,-2	.101,-2	.105,-2	.[illegible],-2	.845,-2
03	.114,-1	.813,-2	.747,-2	.104,-1	.618,-2
04	.114,-1	.807,-2	.779,-2	.10[illegible],-1	.710,-2
05	.[illegible],-2	.712,-2	.[illegible],-2	.124,-1	.[illegible],-2
06	.756,-2	.[illegible],-2	.[illegible],-2	.[illegible],-2	.[illegible],-2
07	.709,-2	.736,-2	.450,-2	.[illegible],-2	.[illegible],-2
08	.764,-2	.729,-2	.[illegible],-2	.[illegible],-2	.[illegible],-2
09	.772,-2	.[illegible],-2	.[illegible],-2	.[illegible],-2	.[illegible],-2
10	.[illegible],-2	.469,-2	.570,-2	.487,-2	.[illegible],-2
11	.807,-2	.[illegible],-2	.[illegible],-2	.[illegible],-2	.[illegible],-2
12	.[illegible],-2	.[illegible],-2	.[illegible],-2	.[illegible],-2	.[illegible],-2
13	.[illegible],-2	.[illegible],-2	.[illegible],-2	.[illegible],-2	.[illegible],-2
14	.[illegible],-2	.[illegible],-2	.[illegible],-2	.[illegible],-2	.[illegible],-2
15	.[illegible],-2	.[illegible],-2	.[illegible],-2	.[illegible],-2	.[illegible],-2
16	.[illegible],-2	.[illegible],-2	.[illegible],-2	.[illegible],-2	.[illegible],-2
17	.[illegible],-2	.[illegible],-2	.[illegible],-2	.[illegible],-2	.[illegible],-2
18	.[illegible],-2	.[illegible],-2	.[illegible],-2	.[illegible],-2	.[illegible],-2
19	.[illegible],-2	.[illegible],-2	.[illegible],-2	.[illegible],-2	.[illegible],-2
20	.[illegible],-2	.[illegible],-2	.[illegible],-2	.[illegible],-2	.[illegible],-2
21	.[illegible],-2	.[illegible],-2	.[illegible],-2	.[illegible],-2	.[illegible],-2
22	.[illegible],-2	.[illegible],-2	.[illegible],-2	.[illegible],-2	.[illegible],-2
23	.[illegible],-2	.[illegible],-2	.[illegible],-2	.[illegible],-2	.[illegible],-2
24	.[illegible],-2	.[illegible],-2	.[illegible],-2	.[illegible],-2	.[illegible],-2
25	.[illegible],-2	.[illegible],-2	.[illegible],-2	.[illegible],-2	.[illegible],-2
26	.[illegible],-2	.[illegible],-2	.[illegible],-2	.[illegible],-2	.[illegible],-2
27	.[illegible],-2	.[illegible],-2	.[illegible],-2	.[illegible],-2	.[illegible],-2
28	.[illegible],-2	.[illegible],-2	.[illegible],-2	.[illegible],-2	.[illegible],-2
29	.[illegible],-2	.[illegible],-2	.[illegible],-2	.[illegible],-2	.[illegible],-2
30	.[illegible],-2	.[illegible],-2	.[illegible],-2	.[illegible],-2	.[illegible],-2
31	.[illegible],-2	.[illegible],-2	.[illegible],-2	.[illegible],-2	.[illegible],-2
32	.[illegible],-2	.[illegible],-2	.[illegible],-2	.[illegible],-2	.[illegible],-2
33	.[illegible],-2	.[illegible],-2	.[illegible],-2	.[illegible],-2	.[illegible],-2
34	.[illegible],-2	.[illegible],-2	.[illegible],-2	.[illegible],-2	.[illegible],-2
35	.[illegible],-2	.[illegible],-2	.[illegible],-2	.[illegible],-2	.[illegible],-2
36	.[illegible],-2	.[illegible],-2	.[illegible],-2	.[illegible],-2	.[illegible],-2
37	.[illegible],-2	.[illegible],-2	.[illegible],-2	.[illegible],-2	.[illegible],-2
38	.[illegible],-2	.[illegible],-2	.[illegible],-2	.[illegible],-2	.[illegible],-2
39	.[illegible],-2	.[illegible],-2	.[illegible],-2	.[illegible],-2	.[illegible],-2
40	.[illegible],-2	.[illegible],-2	.[illegible],-2	.[illegible],-2	.[illegible],-2
41	.[illegible],-2	.[illegible],-2	.[illegible],-2	.[illegible],-2	.[illegible],-2
42	.[illegible],-2	.[illegible],-2	.[illegible],-2	.[illegible],-2	.[illegible],-2
43	.[illegible],-2	.[illegible],-2	.[illegible],-2	.[illegible],-2	.[illegible],-2
44	.[illegible],-2	.[illegible],-2	.[illegible],-2	.[illegible],-2	.[illegible],-2
45	.[illegible],-2	.[illegible],-2	.[illegible],-2	.[illegible],-2	.[illegible],-2
46	.[illegible],-2	.[illegible],-2	.[illegible],-2	.[illegible],-2	.[illegible],-2
47	.[illegible],-2	.[illegible],-2	.[illegible],-2	.[illegible],-2	.[illegible],-2
48	.[illegible],-2	.[illegible],-2	.[illegible],-2	.[illegible],-2	.[illegible],-2
49	.[illegible],-2	.[illegible],-2	.[illegible],-2	.[illegible],-2	.[illegible],-2
50	.[illegible],-2	.[illegible],-2	.[illegible],-2	.[illegible],-2	.[illegible],-2
51	.[illegible],-2	.[illegible],-2	.[illegible],-2	.[illegible],-2	.[illegible],-2
52	.[illegible],-2	.[illegible],-2	.[illegible],-2	.[illegible],-2	.[illegible],-2
53	.[illegible],-2	.[illegible],-2	.[illegible],-2	.[illegible],-2	.[illegible],-2
54	.[illegible],-2	.[illegible],-2	.[illegible],-2	.[illegible],-2	.[illegible],-2
55	.[illegible],-2	.[illegible],-2	.[illegible],-2	.[illegible],-2	.[illegible],-2
56	.[illegible],-2	.[illegible],-2	.[illegible],-2	.[illegible],-2	.[illegible],-2
57	.[illegible],-2	.[illegible],-2	.[illegible],-2	.[illegible],-2	.[illegible],-2
58	.[illegible],-2	.[illegible],-2	.[illegible],-2	.[illegible],-2	.[illegible],-2
59	.[illegible],-2	.[illegible],-2	.[illegible],-2	.[illegible],-2	.[illegible],-2
60	.[illegible],-2	.[illegible],-2	.[illegible],-2	.[illegible],-2	.[illegible],-2

Run No. 38; [illegible] component

N	Anemometer Position Number 1	2	3	4	5
00	.452,-2	.166,-2	.246,-2	.363,-2	.657,-3
01	.554,-2	.255,-2	.293,-2	.407,-2	.307,-2
02	.552,-2	.247,-2	.344,-2	.395,-2	.295,-2
03	.505,-2	.250,-2	.335,-2	.389,-2	.145,-2
04	.524,-2	.226,-2	.334,-2	.387,-2	.139,-2
05	.424,-2	.242,-2	.318,-2	.330,-2	.175,-2
06	.355,-2	.165,-2	.231,-2	.344,-2	.200,-2
07	.341,-2	.118,-2	.226,-2	.307,-2	.221,-2
08	.247,-2	.129,-2	.254,-2	.304,-2	.246,-2
09	.205,-2	.160,-2	.227,-2	.294,-2	.243,-2
10	.271,-2	.137,-2	.248,-2	.305,-2	.253,-2
11	.377,-2	.155,-2	.254,-2	.443,-2	.131,-2
12	.300,-2	.120,-2	.170,-2	.457,-2	.154,-2
13	.275,-2	.113,-2	.177,-2	.367,-2	.163,-2
14	.247,-2	.137,-2	.250,-2	.329,-2	.177,-2
15	.301,-2	.137,-2	.214,-2	.340,-2	.147,-2
16	.309,-2	.130,-2	.237,-2	.353,-2	.121,-2
17	.353,-2	.134,-2	.247,-2	.340,-2	.109,-2
18	.260,-2	.135,-2	.305,-2	.319,-2	.121,-2
19	.258,-2	.145,-2	.275,-2	.275,-2	.152,-2
20	.280,-2	.171,-2	.273,-2	.329,-2	.120,-2
21	.305,-2	.146,-2	.274,-2	.330,-2	.101,-2
22	.345,-2	.154,-2	.254,-2	.350,-2	.117,-2
23	.351,-2	.201,-2	.240,-2	.263,-2	.126,-2
24	.332,-2	.102,-2	.241,-2	.237,-2	.160,-2
25	.320,-2	.109,-2	.211,-2	.228,-2	.116,-2
26	.294,-2	.082,-2	.137,-2	.215,-2	.144,-2
27	.257,-2	.127,-2	.223,-2	.212,-2	.155,-2
28	.150,-2	.107,-2	.205,-2	.207,-2	.150,-2
29	.225,-2	.146,-2	.201,-2	.205,-2	.112,-2
30	.320,-2	.147,-2	.197,-2	.200,-2	.111,-2
31	.357,-2	.135,-2	.177,-2	.200,-2	.107,-2
32	.313,-2	.100,-2	.201,-2	.324,-2	.011,-3
33	.284,-2	.137,-2	.210,-2	.356,-2	.121,-2
34	.216,-2	.120,-2	.218,-2	.355,-2	.157,-2
35	.218,-2	.130,-2	.180,-2	.204,-2	.109,-2
36	.327,-2	.114,-2	.166,-2	.295,-2	.145,-2
37	.301,-2	.105,-2	.201,-2	.328,-2	.155,-2
38	.309,-2	.121,-2	.157,-2	.444,-2	.174,-2
39	.348,-2	.120,-2	.124,-2	.351,-2	.131,-2
40	.214,-2	.157,-2	.157,-2	.201,-2	.133,-2
41	.217,-2	.157,-2	.164,-2	.210,-2	.135,-2
42	.167,-2	.122,-2	.147,-2	.214,-2	.116,-2
43	.271,-2	.154,-2	.146,-2	.241,-2	.127,-2
44	.368,-2	.154,-2	.161,-2	.256,-2	.126,-2
45	.207,-2	.111,-2	.120,-2	.204,-2	.111,-2
46	.130,-2	.146,-2	.175,-2	.100,-2	.136,-2
47	.164,-2	.103,-2	.220,-2	.207,-2	.116,-2
48	.145,-2	.157,-2	.141,-2	.221,-2	.152,-2
49	.170,-2	.100,-2	.151,-2	.233,-2	.141,-2
50	.214,-2	.150,-2	.138,-2	.214,-2	.131,-2
51	.242,-2	.146,-2	.175,-2	.210,-2	.111,-2
52	.246,-2	.134,-2	.150,-2	.223,-2	.112,-2
53	.203,-2	.111,-2	.130,-2	.177,-2	.132,-2
54	.316,-2	.120,-2	.138,-2	.150,-2	.100,-2
55	.267,-2	.143,-2	.120,-2	.214,-2	.100,-2
56	.202,-2	.152,-2	.143,-2	.250,-2	.147,-2
57	.141,-2	.141,-2	.122,-2	.255,-2	.134,-2
58	.275,-2	.158,-2	.132,-2	.202,-2	.160,-2
59	.341,-2	.117,-2	.103,-2	.246,-2	.119,-2
60	.430,-2	.046,-3	.147,-2	.108,-2	.033,-3

Run No. 341 u component

N	Anemometer Position Number 1	2	3	4	5
00	.200	.195	.174	.210	.210
01	.965,-1	.711,-1	.640,-1	.845,-1	.980,-1
02	.741,-2	.465,-2	.705,-2	.806,-2	.970,-2
03	.546,-2	.501,-2	.548,-2	.540,-2	.504,-2
04	.211,-2	.304,-2	.282,-2	.266,-2	.370,-2
05	.169,-2	.275,-2	.205,-2	.203,-2	.401,-2
06	.141,-2	.175,-2	.204,-2	.279,-2	.495,-2
07	.233,-2	.142,-2	.194,-2	.231,-2	.431,-2
08	.406,-2	.149,-2	.192,-2	.211,-2	.414,-2
09	.370,-2	.161,-2	.139,-2	.255,-2	.507,-2
10	.195,-2	.221,-2	.142,-2	.220,-2	.240,-2
11	.149,-2	.190,-2	.162,-2	.249,-2	.218,-2
12	.152,-2	.151,-2	.155,-2	.335,-2	.207,-2
13	.210,-2	.162,-2	.154,-2	.270,-2	.241,-2
14	.244,-2	.157,-2	.166,-2	.217,-2	.197,-2
15	.165,-2	.166,-2	.154,-2	.224,-2	.195,-2
16	.165,-2	.167,-2	.162,-2	.179,-2	.144,-2
17	.137,-2	.161,-2	.158,-2	.159,-2	.139,-2
18	.100,-2	.844,-3	.105,-2	.150,-2	.121,-2
19	.877,-3	.891,-3	.808,-3	.104,-2	.154,-2
20	.109,-2	.797,-3	.859,-3	.114,-2	.114,-2
21	.144,-2	.944,-3	.808,-3	.145,-2	.140,-2
22	.166,-2	.734,-3	.851,-3	.150,-2	.132,-2
23	.146,-2	.904,-3	.766,-3	.127,-2	.110,-2
24	.910,-3	.607,-3	.746,-3	.101,-2	.962,-3
25	.711,-3	.655,-3	.733,-3	.827,-3	.705,-3
26	.651,-3	.595,-3	.562,-3	.602,-3	.711,-3
27	.575,-3	.741,-3	.651,-3	.691,-3	.740,-3
28	.577,-3	.726,-3	.827,-3	.824,-3	.751,-3
29	.724,-3	.644,-3	.745,-3	.771,-3	.734,-3
30	.608,-3	.790,-3	.823,-3	.816,-3	.603,-3
31	.670,-3	.666,-3	.832,-3	.774,-3	.646,-3
32	.669,-3	.692,-3	.825,-3	.665,-3	.614,-3
33	.519,-3	.765,-3	.644,-3	.611,-3	.693,-3
34	.457,-3	.651,-3	.737,-3	.581,-3	.762,-3
35	.601,-3	.642,-3	.726,-3	.655,-3	.806,-3
36	.601,-3	.911,-3	.556,-3	.657,-3	.729,-3
37	.594,-3	.619,-3	.791,-3	.675,-3	.683,-3
38	.571,-3	.870,-3	.968,-3	.570,-3	.614,-3
39	.644,-3	.853,-3	.757,-3	.559,-3	.557,-3
40	.624,-3	.617,-3	.645,-3	.507,-3	.465,-3
41	.588,-3	.566,-3	.720,-3	.598,-3	.526,-3
42	.574,-3	.601,-3	.647,-3	.606,-3	.544,-3
43	.562,-3	.645,-3	.576,-3	.562,-3	.452,-3
44	.510,-3	.719,-3	.640,-3	.604,-3	.547,-3
45	.442,-3	.645,-3	.564,-3	.641,-3	.520,-3
46	.592,-3	.577,-3	.677,-3	.690,-3	.525,-3
47	.584,-3	.579,-3	.532,-3	.540,-3	.590,-3
48	.566,-3	.645,-3	.540,-3	.552,-3	.546,-3
49	.550,-3	.564,-3	.604,-3	.555,-3	.555,-3
50	.601,-3	.455,-3	.665,-3	.549,-3	.551,-3
51	.594,-3	.555,-3	.623,-3	.507,-3	.575,-3
52	.621,-3	.640,-3	.652,-3	.668,-3	.593,-3
53	.640,-3	.649,-3	.617,-3	.611,-3	.560,-3
54	.655,-3	.677,-3	.667,-3	.699,-3	.509,-3
55	.634,-3	.541,-3	.616,-3	.535,-3	.570,-3
56	.585,-3	.507,-3	.542,-3	.566,-3	.579,-3
57	.654,-3	.630,-3	.575,-3	.553,-3	.537,-3
58	.693,-3	.655,-3	.665,-3	.679,-3	.618,-3
59	.622,-3	.613,-3	.667,-3	.678,-3	.586,-3
60	.644,-3	.673,-3	.653,-3	.713,-3	.695,-3

Run No. 39; u component

	Anemometer Position Number				
N	1	2	3	4	5
00	.704,-1	.610,-1	.866,-1	.556,-1	.411,-1
01	.314,-1	.275,-1	.387,-1	.256,-1	.191,-1
02	.164,-2	.125,-2	.133,-2	.232,-2	.142,-2
03	.102,-2	.518,-3	.582,-3	.196,-2	.627,-3
04	.732,-3	.405,-3	.596,-3	.184,-2	.624,-3
05	.827,-3	.561,-3	.529,-3	.125,-2	.673,-3
06	.112,-2	.534,-3	.654,-3	.687,-3	.557,-3
07	.977,-3	.402,-3	.728,-3	.780,-3	.694,-3
08	.788,-3	.512,-3	.513,-3	.845,-3	.662,-3
09	.706,-3	.614,-3	.320,-3	.114,-2	.728,-3
10	.801,-3	.505,-3	.248,-3	.141,-2	.409,-3
11	.979,-3	.382,-3	.555,-3	.134,-2	.504,-3
12	.101,-2	.418,-3	.502,-3	.959,-3	.511,-3
13	.929,-3	.504,-3	.400,-3	.312,-3	.519,-3
14	.621,-3	.493,-3	.456,-3	.552,-3	.569,-3
15	.369,-3	.625,-3	.428,-3	.578,-3	.541,-3
16	.464,-3	.585,-3	.568,-3	.570,-3	.626,-3
17	.445,-3	.574,-3	.456,-3	.219,-3	.745,-3
18	.456,-3	.418,-3	.544,-3	.580,-3	.767,-3
19	.699,-3	.502,-3	.471,-3	.595,-3	.657,-3
20	.757,-3	.542,-3	.503,-3	.509,-3	.617,-3
21	.705,-3	.423,-3	.592,-3	.584,-3	.609,-3
22	.689,-3	.465,-3	.556,-3	.601,-3	.469,-3
23	.461,-3	.501,-3	.556,-3	.620,-3	.406,-3
24	.589,-3	.555,-3	.558,-3	.551,-3	.562,-3
25	.495,-3	.576,-3	.506,-3	.428,-3	.660,-3
26	.622,-3	.414,-3	.542,-3	.599,-3	.414,-3
27	.548,-3	.589,-3	.247,-3	.459,-3	.560,-3
28	.521,-3	.274,-3	.555,-3	.511,-3	.485,-3
29	.560,-3	.575,-3	.547,-3	.411,-3	.495,-3
30	.525,-3	.597,-3	.279,-3	.875,-3	.489,-3
31	.550,-3	.279,-3	.581,-3	.835,-3	.358,-3
32	.520,-3	.569,-3	.202,-3	.395,-3	.551,-3
33	.505,-3	.496,-3	.524,-3	.555,-3	.597,-3
34	.514,-3	.409,-3	.969,-3	.996,-3	.558,-3
35	.594,-3	.569,-3	.255,-3	.292,-3	.508,-3
36	.475,-3	.509,-3	.200,-3	.305,-3	.557,-3
37	.479,-3	.518,-3	.269,-3	.544,-3	.550,-3
38	.478,-3	.511,-3	.540,-3	.998,-3	.594,-3
39	.496,-3	.547,-3	.375,-3	.526,-3	.420,-3
40	.509,-3	.435,-3	.551,-3	.542,-3	.525,-3
41	.668,-3	.508,-3	.577,-3	.218,-3	.190,-3
42	.810,-3	.406,-3	.275,-3	.828,-3	.185,-3
43	.644,-3	.544,-3	.985,-3	.552,-3	.849,-3
44	.542,-3	.867,-3	.251,-3	.431,-3	.510,-3
45	.286,-3	.198,-3	.224,-3	.558,-3	.575,-3
46	.429,-3	.246,-3	.188,-3	.920,-3	.509,-3
47	.644,-3	.317,-3	.254,-3	.157,-3	.405,-3
48	.704,-3	.504,-3	.285,-3	.767,-4	.327,-3
49	.496,-3	.356,-3	.231,-3	.676,-4	.311,-3
50	.490,-3	.520,-3	.189,-3	.114,-3	.264,-3
51	.586,-3	.206,-3	.155,-3	.270,-3	.279,-3
52	.257,-3	.242,-3	.219,-3	.307,-3	.280,-3
53	.292,-3	.278,-3	.282,-3	.194,-3	.250,-3
54	.594,-3	.222,-3	.214,-3	.168,-3	.253,-3
55	.719,-3	.209,-3	.191,	.263,-3	.216,-3
56	.642,-3	.237,-3	.219,-3	.238,-3	.238,-3
57	.643,-3	.259,-3	.171,-3	.142,-3	.328,-3
58	.616,-3	.297,-3	.170,-3	.154,-3	.331,-3
59	.535,-3	.302,-3	.151,-3	.143,-3	.318,-3
60	.405,-3	.257,-3	.102,-3	.110,-3	.240,-3

Run No. 39; w component

	Anemometer Position Number				
N	1	2	3	4	5
00	.106,-2	.420,-3	.135,-3	.383,-3	.158,-3
01	.824,-3	.501,-3	.177,-3	.476,-3	.241,-3
02	.587,-3	.174,-3	.202,-3	.568,-3	.256,-3
03	.454,-3	.164,-3	.216,-3	.619,-3	.171,-3
04	.339,-3	.142,-3	.261,-3	.778,-3	.150,-3
05	.349,-3	.121,-3	.206,-3	.707,-3	.209,-3
06	.413,-3	.149,-3	.172,-3	.446,-3	.212,-3
07	.475,-3	.228,-3	.155,-3	.358,-3	.245,-3
08	.504,-3	.222,-3	.169,-3	.414,-3	.260,-3
09	.520,-3	.189,-3	.218,-3	.463,-3	.172,-3
10	.462,-3	.179,-3	.242,-3	.650,-3	.149,-3
11	.417,-3	.189,-3	.207,-3	.827,-3	.144,-3
12	.357,-3	.165,-3	.250,-3	.721,-3	.135,-3
13	.381,-3	.201,-3	.293,-3	.522,-3	.192,-3
14	.505,-3	.209,-3	.277,-3	.405,-3	.215,-3
15	.518,-3	.192,-3	.268,-3	.394,-3	.180,-3
16	.375,-3	.229,-3	.340,-3	.314,-3	.164,-3
17	.300,-3	.241,-3	.339,-3	.224,-3	.170,-3
18	.278,-3	.207,-3	.306,-3	.243,-3	.151,-3
19	.249,-3	.219,-3	.269,-3	.441,-3	.155,-3
20	.248,-3	.232,-3	.225,-3	.466,-3	.185,-3
21	.238,-3	.207,-3	.215,-3	.536,-3	.192,-3
22	.314,-3	.162,-3	.332,-3	.412,-3	.101,-3
23	.331,-3	.154,-3	.350,-3	.436,-3	.100,-3
24	.256,-3	.150,-3	.208,-3	.472,-3	.124,-3
25	.286,-3	.154,-3	.151,-3	.459,-3	.134,-3
26	.344,-3	.169,-3	.248,-3	.458,-3	.141,-3
27	.324,-3	.185,-3	.395,-3	.403,-3	.147,-3
28	.386,-3	.219,-3	.[illegible],-3	.400,-3	.165,-3
29	.506,-3	.207,-3	.[illegible],-3	.294,-3	.135,-3
30	.518,-3	.148,-3	.2[illegible],-3	.232,-3	.970,-4
31	.410,-3	.135,-3	.242,-3	.212,-3	.650,-4
32	.349,-3	.180,-3	.188,-3	.242,-3	.761,-4
33	.247,-3	.151,-3	.966,-4	.270,-3	.118,-3
34	.306,-3	.188,-3	.225,-3	.205,-3	.134,-3
35	.288,-3	.213,-3	.150,-3	.207,-3	.166,-3
36	.273,-3	.181,-3	.154,-3	.330,-3	.[illegible],-4
37	.252,-3	.160,-3	.[illegible],-3	.419,-3	.122,-3
38	.241,-3	.168,-3	.[illegible],-3	.339,-3	.160,-3
39	.270,-3	.166,-3	.177,-3	.264,-3	.121,-3
40	.353,-3	.241,-3	.182,-3	.249,-3	.113,-3
41	.406,-3	.232,-3	.204,-3	.296,-3	.139,-3
42	.274,-3	.269,-3	.256,-3	.343,-3	.166,-3
43	.217,-3	.307,-3	.229,-3	.262,-3	.171,-3
44	.225,-3	.235,-3	.251,-3	.220,-3	.135,-3
45	.195,-3	.154,-3	.256,-3	.210,-3	.157,-3
46	.177,-3	.142,-3	.186,-3	.252,-3	.275,-3
47	.240,-3	.154,-3	.161,-3	.337,-3	.192,-3
48	.313,-3	.240,-3	.141,-3	.304,-3	.133,-3
49	.422,-3	.207,-3	.142,-3	.302,-3	.101,-3
50	.340,-3	.110,-3	.171,-3	.359,-3	.162,-3
51	.209,-3	.750,-4	.958,-3	.322,-3	.125,-3
52	.235,-3	.989,-4	.263,-3	.236,-3	.884,-4
53	.411,-3	.144,-3	.185,-3	.205,-3	.896,-4
54	.306,-3	.124,-3	.125,-3	.229,-3	.134,-3
55	.380,-3	.730,-4	.141,-3	.325,-3	.149,-3
56	.275,-3	.792,-4	.200,-3	.366,-3	.124,-3
57	.215,-3	.867,-4	.155,-3	.361,-3	.148,-3
58	.285,-3	.130,-3	.909,-4	.331,-3	.168,-3
59	.344,-3	.202,-3	.967,-4	.201,-3	.133,-3
60	.321,-3	.207,-3	.999,-4	.121,-3	.905,-4

Run No. 41; u component

	Anemometer Position Number				
N	1	2	3	4	5
00	.239,-1	.431,-1	.243,-1	.311,-1	.285,-1
01	.245,-1	.335,-1	.269,-1	.240,-1	.338,-1
02	.255,-1	.195,-1	.252,-1	.230,-1	.349,-1
03	.264,-1	.158,-1	.205,-1	.265,-1	.311,-1
04	.259,-1	.122,-1	.203,-1	.255,-1	.257,-1
05	.192,-1	.850,-2	.162,-1	.227,-1	.163,-1
06	.169,-1	.876,-2	.155,-1	.163,-1	.135,-1
07	.118,-1	.883,-2	.193,-1	.128,-1	.140,-1
08	.111,-1	.885,-2	.987,-2	.106,-1	.135,-1
09	.139,-1	.862,-2	.693,-2	.803,-2	.100,-1
10	.108,-1	.700,-2	.826,-2	.950,-2	.973,-2
11	.101,-1	.515,-2	.771,-2	.105,-1	.130,-1
12	.858,-2	.509,-2	.759,-2	.917,-2	.148,-1
13	.550,-2	.542,-2	.848,-2	.579,-2	.133,-1
14	.560,-2	.625,-2	.794,-2	.426,-2	.106,-1
15	.706,-2	.518,-2	.690,-2	.545,-2	.905,-2
16	.621,-2	.577,-2	.559,-2	.602,-2	.718,-2
17	.420,-2	.496,-2	.430,-2	.436,-2	.690,-2
18	.449,-2	.419,-2	.370,-2	.406,-2	.671,-2
19	.550,-2	.375,-2	.568,-2	.517,-2	.680,-2
20	.599,-2	.421,-2	.287,-2	.559,-2	.679,-2
21	.702,-2	.395,-2	.250,-2	.523,-2	.734,-2
22	.584,-2	.420,-2	.278,-2	.617,-2	.810,-2
23	.533,-2	.400,-2	.269,-2	.545,-2	.708,-2
24	.559,-2	.355,-2	.288,-2	.502,-2	.613,-2
25	.394,-2	.284,-2	.318,-2	.359,-2	.452,-2
26	.280,-2	.276,-2	.321,-2	.388,-2	.395,-2
27	.286,-2	.274,-2	.347,-2	.318,-2	.371,-2
28	.411,-2	.273,-2	.420,-2	.241,-2	.397,-2
29	.359,-2	.245,-2	.291,-2	.229,-2	.352,-2
30	.260,-2	.254,-2	.192,-2	.244,-2	.573,-2
31	.241,-2	.227,-2	.176,-2	.515,-2	.505,-2
32	.295,-2	.192,-2	.206,-2	.290,-2	.464,-2
33	.329,-2	.177,-2	.190,-2	.173,-2	.442,-2
34	.309,-2	.154,-2	.171,-2	.170,-2	.316,-2
35	.231,-2	.179,-2	.170,-2	.217,-2	.246,-2
36	.271,-2	.104,-2	.197,-2	.231,-2	.230,-2
37	.357,-2	.130,-2	.242,-2	.104,-2	.266,-2
38	.260,-2	.130,-2	.239,-2	.188,-2	.318,-2
39	.185,-2	.152,-2	.210,-2	.167,-2	.322,-2
40	.154,-2	.159,-2	.195,-2	.101,-2	.367,-2
41	.167,-2	.112,-2	.170,-2	.102,-2	.409,-2
42	.211,-2	.858,-3	.159,-2	.138,-2	.352,-2
43	.178,-2	.105,-2	.143,-2	.162,-2	.268,-2
44	.174,-2	.134,-2	.152,-2	.170,-2	.100,-2
45	.151,-2	.117,-2	.108,-2	.140,-2	.275,-2
46	.100,-2	.111,-2	.201,-2	.173,-2	.440,-2
47	.111,-2	.120,-2	.172,-2	.168,-2	.385,-2
48	.152,-2	.106,-2	.158,-2	.117,-2	.293,-2
49	.184,-2	.814,-3	.120,-2	.101,-2	.274,-2
50	.164,-2	.788,-3	.121,-2	.136,-2	.277,-2
51	.131,-2	.118,-2	.161,-2	.119,-2	.302,-2
52	.128,-2	.138,-2	.150,-2	.905,-3	.342,-2
53	.100,-2	.110,-2	.105,-2	.951,-3	.310,-2
54	.124,-2	.981,-3	.105,-2	.101,-2	.283,-2
55	.135,-2	.113,-2	.102,-2	.116,-2	.200,-2
56	.121,-2	.122,-2	.110,-2	.104,-2	.246,-2
57	.104,-2	.109,-2	.123,-2	.768,-3	.266,-2
58	.991,-3	.119,-2	.129,-2	.802,-3	.300,-2
59	.105,-2	.117,-2	.928,-3	.687,-3	.276,-2
60	.936,-3	.912,-3	.650,-3	.496,-3	.191,-2

Run No. 41; v component

N	Anemometer Position Number 1	2	3	4	5
00	.624,-2	.440,-2	.476,-2	.659,-2	.557,-2
01	.548,-2	.368,-2	.345,-2	.459,-2	.407,-2
02	.420,-2	.251,-2	.198,-2	.344,-2	.275,-2
03	.371,-2	.263,-2	.186,-2	.353,-2	.305,-2
04	.379,-2	.284,-2	.229,-2	.266,-2	.389,-2
05	.350,-2	.202,-2	.304,-2	.308,-2	.478,-2
06	.374,-2	.208,-2	.273,-2	.357,-2	.460,-2
07	.479,-2	.220,-2	.234,-2	.410,-2	.304,-2
08	.472,-2	.211,-2	.250,-2	.375,-2	.360,-2
09	.342,-2	.141,-2	.277,-2	.375,-2	.329,-2
10	.372,-2	.214,-2	.300,-2	.353,-2	.271,-2
11	.405,-2	.223,-2	.300,-2	.285,-2	.320,-2
12	.371,-2	.276,-2	.270,-2	.319,-2	.210,-2
13	.295,-2	.241,-2	.242,-2	.350,-2	.201,-2
14	.288,-2	.210,-2	.180,-2	.305,-2	.145,-2
15	.305,-2	.276,-2	.174,-2	.254,-2	.110,-2
16	.337,-2	.371,-2	.209,-2	.198,-2	.165,-2
17	.321,-2	.341,-2	.230,-2	.226,-2	.212,-2
18	.264,-2	.251,-2	.241,-2	.231,-2	.214,-2
19	.277,-2	.223,-2	.253,-2	.224,-2	.275,-2
20	.344,-2	.257,-2	.195,-2	.301,-2	.266,-2
21	.327,-2	.229,-2	.176,-2	.243,-2	.311,-2
22	.316,-2	.181,-2	.178,-2	.192,-2	.314,-2
23	.359,-2	.217,-2	.161,-2	.147,-2	.240,-2
24	.346,-2	.233,-2	.221,-2	.257,-2	.296,-2
25	.310,-2	.157,-2	.244,-2	.232,-2	.217,-2
26	.293,-2	.144,-2	.240,-2	.208,-2	.205,-2
27	.357,-2	.210,-2	.210,-2	.232,-2	.251,-2
28	.246,-2	.228[illegible],-2	.212,-2	.215,-2	.301,-2
29	.325,-2	.198,-2	.257,-2	.209,-2	.247,-2
30	.312,-2	.162,-2	.251,-2	.234,-2	.176,-2
31	.270,-2	.149,-2	.251,-2	.208,-2	.194,-2
32	.260,-2	.172,-2	.193,-2	.192,-2	.223,-2
33	.294,-2	.176,-2	.177,-2	.201,-2	.179,-2
34	.247,-2	.169,-2	.165,-2	.144,-2	.141,-2
35	.222,-2	.167,-2	.150,-2	.144,-2	.201,-2
36	.256,-2	.159,-2	.172,-2	.221,-2	.234,-2
37	.257,-2	.141,-2	.195,-2	.250,-2	.238,-2
38	.255,-2	.144,-2	.176,-2	.257,-2	.234,-2
39	.244,-2	.139,-2	.177,-2	.191,-2	.241,-2
40	.328,-2	.193,-2	.146,-2	.131,-2	.227,-2
41	.291,-2	.156,-2	.138,-2	.146,-2	.145,-2
42	.194,-2	.178,-2	.181,-2	.140,-2	.194,-2
43	.193,-2	.174,-2	.257,-2	.155,-2	.205,-2
44	.247,-2	.197,-2	.309,-2	.157,-2	.206,-2
45	.250,-2	.105,-2	.257,-2	.145,-2	.237,-2
46	.246,-2	.105,-2	.184,-2	.136,-2	.174,-2
47	.216,-2	.149,-2	.142,-2	.117,-2	.155,-2
48	.221,-2	.204,-2	.108,-2	.687,-3	.209,-2
49	.202,-2	.193,-2	.154,-2	.127,-2	.185,-2
50	.232,-2	.122,-2	.150,-2	.172,-2	.114,-2
51	.221,-2	.108,-2	.142,-2	.916,-3	.918,-3
52	.171,-2	.151,-2	.140,-2	.257,-2	.114,-2
53	.151,-2	.135,-2	.142,-2	.251,-2	.194,-2
54	.167,-2	.968,-3	.161,-2	.234,-2	.168,-2
55	.192,-2	.109,-2	.124,-2	.172,-2	.131,-2
56	.161,-2	.179,-2	.104,-2	.144,-2	.139,-2
57	.124,-2	.205,-2	.127,-2	.182,-2	.158,-2
58	.145,-2	.167,-2	.157,-2	.161,-2	.177,-2
59	.156,-2	.152,-2	.100,-2	.140,-2	.186,-2
60	.134,-2	.140,-2	.764,-3	.136,-2	.175,-2

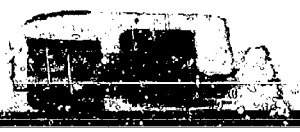

Run No. 41; v component

N	Anemometer Position Number 1	2	3	4	5
00	.116,-2	.110,-2	.109,-2	.952,-2	.110,-2
01	.181,-2	.148,-2	.152,-2	.201,-2	.124,-2
02	.220,-2	.167,-2	.201,-2	.157,-2	.163,-2
03	.165,-2	.185,-2	.175,-2	.221,-2	.144,-2
04	.166,-2	.179,-2	.154,-2	.242,-2	.109,-2
05	.166,-2	.156,-2	.129,-2	.835,-3	.115,-2
06	.145,-2	.108,-2	.169,-2	.102,-2	.116,-2
07	.138,-2	.826,-3	.146,-2	.167,-2	.151,-2
08	.179,-2	.115,-2	.128,-2	.179,-2	.105,-2
09	.215,-2	.154,-2	.169,-2	.160,-2	.155,-2
10	.191,-2	.119,-2	.243,-2	.200,-2	.104,-2
11	.137,-2	.970,-3	.190,-2	.216,-2	.119,-2
12	.139,-2	.896,-3	.163,-2	.145,-2	.128,-2
13	.155,-2	.819,-3	.156,-2	.108,-2	.114,-2
14	.155,-2	.907,-3	.195,-2	.113,-2	.909,-3
15	.181,-2	.776,-3	.145,-2	.157,-2	.844,-3
16	.127,-2	.581,-3	.285,-2	.179,-2	.995,-3
17	.178,-2	.101,-2	.255,-2	.141,-2	.111,-2
18	.177,-2	.144,-2	.185,-2	.118,-2	.109,-2
19	.140,-2	.142,-2	.151,-2	.128,-2	.918,-3
20	.109,-2	.155,-2	.124,-2	.144,-2	.962,-3
21	.159,-2	.100,-2	.165,-2	.145,-2	.142,-2
22	.260,-2	.826,-3	.140,-2	.161,-2	.167,-2
23	.966,-2	.101,-2	.180,-2	.172,-2	.934,-3
24	.916,-2	.900,-3	.154,-2	.150,-2	.137,-2
25	.177,-2	.970,-3	.157,-2	.154,-2	.139,-2
26	.144,-2	.889,-3	.156,-2	.205,-2	.141,-2
27	.135,-2	.876,-3	.155,-2	.191,-2	.105,-2
28	.145,-2	.968,-3	.151,-2	.177,-2	.666,-3
29	.129,-2	.101,-2	.160,-2	.104,-2	.560,-3
30	.115,-2	.107,-2	.145,-2	.195,-2	.805,-3
31	.110,-2	.107,-2	.819,-3	.122,-2	.108,-2
32	.159,-2	.984,-3	.865,-3	.101,-2	.104,-2
33	.168,-2	.100,-2	.150,-2	.168,-2	.109,-2
34	.157,-2	.129,-2	.167,-2	.146,-2	.786,-3
35	.148,-2	.108,-2	.167,-2	.135,-2	.514,-3
36	.154,-2	.101,-2	.117,-2	.116,-2	.788,-3
37	.180,-2	.719,-3	.968,-3	.108,-2	.107,-2
38	.169,-2	.709,-3	.134,-2	.181,-2	.111,-2
39	.181,-2	.897,-3	.157,-2	.140,-2	.905,-3
40	.904,-3	.885,-3	.117,-2	.144,-2	.970,-3
41	.118,-2	.807,-3	.160,-2	.119,-2	.119,-2
42	.168,-2	.741,-3	.150,-2	.107,-2	.117,-2
43	.120,-2	.756,-3	.118,-2	.185,-2	.944,-3
44	.116,-2	.704,-3	.168,-2	.150,-2	.785,-3
45	.160,-2	.718,-3	.169,-2	.156,-2	.718,-3
46	.125,-2	.759,-3	.168,-2	.158,-2	.907,-3
47	.111,-2	.957,-3	.185,-2	.169,-2	.885,-3
48	.149,-2	.113,-2	.120,-2	.141,-2	.870,-3
49	.209,-2	.968,-3	.185,-2	.157,-2	.114,-2
50	.181,-2	.117,-2	.116,-2	.150,-2	.998,-3
51	.121,-2	.158,-2	.142,-2	.129,-2	.907,-3
52	.109,-2	.114,-2	.143,-2	.122,-2	.975,-3
53	.102,-2	.900,-3	.105,-2	.150,-2	.109,-2
54	.106,-2	.881,-3	.887,-3	.155,-2	.805,-3
55	.114,-2	.107,-2	.891,-3	.168,-2	.807,-3
56	.122,-2	.114,-2	.105,-2	.158,-2	.770,-3
57	.140,-2	.886,-3	.124,-2	.155,-2	.701,-3
58	.177,-2	.797,-3	.110,-2	.168,-2	.898,-3
59	.195,-2	.791,-3	.835,-3	.145,-2	.102,-2
60	.157,-2	.702,-3	.787,-3	.124,-2	.889,-3

Run No. 42; u component

N	Anemometer Position Number 1	2	3	4	5
00	.138	.163	.122	.125	.200
01	.155	.159	.137	.139	.167
02	.156	.117	.127	.140	.166
03	.743,-1	.101	.840,-1	.134	.142
04	.489,-1	.756,-1	.981,-1	.115	.115
05	.534,-1	.587,-1	.587,-1	.979,-1	.812,-1
06	.496,-1	.475,-1	.617,-1	.709,-1	.552,-1
07	.379,-1	.376,-1	.418,-1	.529,-1	.369,-1
08	.287,-1	.215,-1	.455,-1	.409,-1	.387,-1
09	.508,-1	.180,-1	.594,-1	.372,-1	.278,-1
10	.314,-1	.929,-1	.259,-1	.344,-1	.198,-1
11	.292,-1	.211,-1	.219,-1	.326,-1	.210,-1
12	.252,-1	.174,-1	.191,-1	.289,-1	.218,-1
13	.160,-1	.181,-1	.185,-1	.228,-1	.212,-1
14	.143,-1	.146,-1	.205,-1	.160,-1	.177,-1
15	.106,-1	.110,-1	.195,-1	.197,-1	.250,-1
16	.155,-1	.121,-1	.163,-1	.171,-1	.234,-1
17	.138,-1	.105,-1	.112,-1	.191,-1	.168,-1
18	.104,-1	.101,-1	.107,-1	.125,-1	.150,-1
19	.955,-2	.100,-1	.106,-1	.180,-1	.138,-1
20	.118,-1	.668,-2	.118,-1	.168,-1	.119,-1
21	.136,-1	.898,-2	.852,-2	.140,-1	.104,-1
22	.101,-1	.954,-2	.675,-2	.135,-1	.918,-2
23	.909,-2	.865,-2	.856,-2	.132,-1	.935,-2
24	.102,-1	.843,-2	.900,-2	.112,-1	.110,-1
25	.945,-2	.888,-2	.775,-2	.810,-2	.135,-1
26	.755,-2	.585,-2	.102,-1	.851,-2	.104,-1
27	.562,-2	.921,-2	.684,-2	.106,-1	.767,-2
28	.688,-2	.675,-2	.908,-2	.871,-2	.899,-2
29	.923,-2	.686,-2	.598,-2	.816,-2	.772,-2
30	.876,-2	.994,-2	.636,-2	.870,-2	.643,-2
31	.607,-2	.567,-2	.759,-2	.804,-2	.734,-2
32	.560,-2	.504,-2	.665,-2	.856,-2	.752,-2
33	.561,-2	.493,-2	.458,-2	.867,-2	.700,-2
34	.667,-2	.431,-2	.552,-2	.551,-2	.694,-2
35	.610,-2	.494,-2	.425,-2	.540,-2	.601,-2
36	.688,-2	.571,-2	.569,-2	.570,-2	.781,-2
37	.605,-2	.557,-2	.709,-2	.471,-2	.557,-2
38	.558,-2	.415,-2	.602,-2	.499,-2	.551,-2
39	.550,-2	.356,-2	.506,-2	.479,-2	.536,-2
40	.561,-2	.379,-2	.549,-2	.460,-2	.446,-2
41	.616,-2	.406,-2	.522,-2	.532,-2	.433,-2
42	.589,-2	.387,-2	.540,-2	.455,-2	.550,-2
43	.516,-2	.349,-2	.505,-2	.535,-2	.577,-2
44	.428,-2	.305,-2	.429,-2	.485,-2	.557,-2
45	.432,-2	.269,-2	.347,-2	.634,-2	.418,-2
46	.450,-2	.256,-2	.365,-2	.477,-2	.341,-2
47	.370,-2	.309,-2	.406,-2	.489,-2	.375,-2
48	.495,-2	.309,-2	.430,-2	.441,-2	.408,-2
49	.597,-2	.244,-2	.489,-2	.427,-2	.459,-2
50	.484,-2	.297,-2	.367,-2	.423,-2	.567,-2
51	.391,-2	.400,-2	.360,-2	.340,-2	.492,-2
52	.490,-2	.473,-2	.405,-2	.386,-2	.399,-2
53	.339,-2	.401,-2	.373,-2	.388,-2	.368,-2
54	.281,-2	.297,-2	.304,-2	.367,-2	.480,-2
55	.315,-2	.279,-2	.384,-2	.345,-2	.399,-2
56	.307,-2	.333,-2	.385,-2	.890,-2	.361,-2
57	.254,-2	.344,-2	.386,-2	.500,-2	.476,-2
58	.277,-2	.213,-2	.307,-2	.387,-2	.381,-2
59	.304,-2	.213,-2	.315,-2	.291,-2	.307,-2
60	.255,-2	.225,-2	.863,-2	.257,-2	.287,-2

Run No. 42; v component

	Anemometer Position Number				
#	1	2	3	4	5
00	.562,-1	.449,-1	.387,-1	.406,-1	.429,-1
01	.424,-1	.359,-1	.339,-1	.352,-1	.359,-1
02	.289,-1	.295,-1	.347,-1	.295,-1	.255,-1
03	.252,-1	.268,-1	.319,-1	.262,-1	.178,-1
04	.202,-1	.180,-1	.169,-1	.205,-1	.150,-1
05	.194,-1	.127,-1	.960,-2	.154,-1	.137,-1
06	.216,-1	.116,-1	.982,-2	.156,-1	.120,-1
07	.212,-1	.784,-2	.138,-1	.170,-1	.110,-1
08	.154,-1	.585,-2	.169,-1	.150,-1	.123,-1
09	.121,-1	.626,-2	.149,-1	.158,-1	.102,-1
10	.119,-1	.765,-2	.101,-1	.134,-1	.646,-2
11	.116,-1	.795,-2	.755,-2	.156,-1	.611,-2
12	.976,-2	.888,-2	.676,-2	.143,-1	.765,-2
13	.895,-2	.822,-2	.659,-2	.111,-1	.589,-2
14	.980,-2	.513,-2	.574,-2	.846,-2	.558,-2
15	.106,-1	.528,-2	.650,-2	.945,-2	.681,-2
16	.105,-1	.767,-2	.650,-2	.109,-1	.758,-2
17	.110,-1	.751,-2	.670,-2	.959,-2	.664,-2
18	.940,-2	.731,-2	.886,-2	.795,-2	.655,-2
19	.855,-2	.944,-2	.101,-1	.785,-2	.689,-2
20	.606,-2	.552,-2	.944,-2	.894,-2	.649,-2
21	.738,-2	.752,-2	.109,-1	.727,-2	.513,-2
22	.760,-2	.789,-2	.964,-2	.796,-2	.521,-2
23	.701,-2	.734,-2	.844,-2	.817,-2	.547,-2
24	.683,-2	.739,-2	.745,-2	.751,-2	.605,-2
25	.710,-2	.517,-2	.729,-2	.671,-2	.549,-2
26	.567,-2	.448,-2	.797,-2	.512,-2	.531,-2
27	.594,-2	.447,-2	.695,-2	.457,-2	.507,-2
28	.639,-2	.552,-2	.721,-2	.579,-2	.456,-2
29	.641,-2	.607,-2	.709,-2	.542,-2	.505,-2
30	.620,-2	.518,-2	.587,-2	.443,-2	.550,-2
31	.646,-2	.550,-2	.655,-2	.520,-2	.601,-2
32	.807,-2	.451,-2	.519,-2	.720,-2	.500,-2
33	.968,-2	.477,-2	.609,-2	.634,-2	.551,-2
34	.985,-2	.446,-2	.560,-2	.703,-2	.407,-2
35	.709,-2	.546,-2	.601,-2	.748,-2	.629,-2
36	.649,-2	.634,-2	.482,-2	.675,-2	.649,-2
37	.496,-2	.677,-2	.422,-2	.565,-2	.632,-2
38	.458,-2	.639,-2	.460,-2	.470,-2	.470,-2
39	.494,-2	.510,-2	.380,-2	.490,-2	.409,-2
40	.468,-2	.452,-2	.326,-2	.449,-2	.431,-2
41	.558,-2	.409,-2	.458,-2	.566,-2	.437,-2
42	.632,-2	.444,-2	.532,-2	.564,-2	.564,-2
43	.693,-2	.470,-2	.585,-2	.620,-2	.601,-2
44	.807,-2	.510,-2	.547,-2	.441,-2	.509,-2
45	.675,-2	.547,-2	.503,-2	.577,-2	.408,-2
46	.729,-2	.492,-2	.531,-2	.442,-2	.379,-2
47	.757,-2	.460,-2	.398,-2	.331,-2	.462,-2
48	.688,-2	.498,-2	.355,-2	.387,-2	.451,-2
49	.616,-2	.379,-2	.335,-2	.411,-2	.435,-2
50	.708,-2	.560,-2	.401,-2	.392,-2	.409,-2
51	.768,-2	.437,-2	.445,-2	.408,-2	.412,-2
52	.743,-2	.574,-2	.346,-2	.439,-2	.378,-2
53	.648,-2	.605,-2	.379,-2	.362,-2	.435,-2
54	.465,-2	.461,-2	.457,-2	.415,-2	.606,-2
55	.565,-2	.379,-2	.581,-2	.382,-2	.553,-2
56	.568,-2	.366,-2	.608,-2	.454,-2	.471,-2
57	.649,-2	.367,-2	.492,-2	.508,-2	.400,-2
58	.798,-2	.364,-2	.454,-2	.454,-2	.392,-2
59	.710,-2	.320,-2	.434,-2	.356,-2	.375,-2
60	.597,-2	.899,-2	.369,-2	.337,-2	.293,-2

Run No. 42; w component

M	Anemometer Position Number				
	1	2	3	4	5
00	.580,-2	.363,-2	.360,-2	.444,-2	.250,-2
01	.709,-2	.465,-2	.469,-2	.465,-2	.303,-2
02	.721,-2	.479,-2	.485,-2	.564,-2	.360,-2
03	.594,-2	.390,-2	.516,-2	.607,-2	.380,-2
04	.537,-2	.315,-2	.509,-2	.608,-2	.309,-2
05	.509,-2	.480,-2	.594,-2	.444,-2	.306,-2
06	.398,-2	.363,-2	.529,-2	.436,-2	.385,-2
07	.470,-2	.319,-2	.558,-2	.361,-2	.368,-2
08	.590,-2	.398,-2	.600,-2	.530,-2	.445,-2
09	.614,-2	.360,-2	.471,-2	.541,-2	.305,-2
10	.562,-2	.393,-2	.562,-2	.422,-2	.306,-2
11	.427,-2	.419,-2	.519,-2	.424,-2	.298,-2
12	.334,-2	.329,-2	.478,-2	.385,-2	.366,-2
13	.298,-2	.421,-2	.594,-2	.435,-2	.444,-2
14	.310,-2	.469,-2	.541,-2	.424,-2	.379,-2
15	.420,-2	.460,-2	.416,-2	.368,-2	.357,-2
16	.472,-2	.472,-2	.438,-2	.376,-2	.444,-2
17	.454,-2	.424,-2	.396,-2	.377,-2	.396,-2
18	.382,-2	.354,-2	.352,-2	.308,-2	.351,-2
19	.341,-2	.314,-2	.337,-2	.345,-2	.264,-2
20	.309,-2	.429,-2	.426,-2	.392,-2	.363,-2
21	.333,-2	.391,-2	.401,-2	.409,-2	.337,-2
22	.381,-2	.370,-2	.417,-2	.349,-2	.340,-2
23	.414,-2	.329,-2	.387,-2	.345,-2	.348,-2
24	.373,-2	.346,-2	.434,-2	.295,-2	.306,-2
25	.366,-2	.461,-2	.397,-2	.384,-2	.310,-2
26	.336,-2	.333,-2	.410,-2	.409,-2	.351,-2
27	.302,-2	.373,-2	.353,-2	.413,-2	.344,-2
28	.277,-2	.340,-2	.426,-2	.414,-2	.341,-2
29	.254,-2	.314,-2	.417,-2	.385,-2	.261,-2
30	.279,-2	.256,-2	.224,-2	.388,-2	.231,-2
31	.247,-2	.325,-2	.353,-2	.333,-2	.205,-2
32	.296,-2	.345,-2	.338,-2	.334,-2	.174,-2
33	.370,-2	.348,-2	.406,-2	.357,-2	.244,-2
34	.343,-2	.307,-2	.371,-2	.336,-2	.251,-2
35	.441,-2	.376,-2	.340,-2	.317,-2	.257,-2
36	.416,-2	.334,-2	.368,-2	.296,-2	.216,-2
37	.359,-2	.145,-2	.308,-2	.329,-2	.209,-2
38	.424,-2	.290,-2	.321,-2	.360,-2	.156,-2
39	.287,-2	.329,-2	.421,-2	.295,-2	.155,-2
40	.261,-2	.145,-2	.444,-2	.345,-2	.188,-2
41	.305,-2	.299,-2	.431,-2	.353,-2	.195,-2
42	.414,-2	.372,-2	.336,-2	.349,-2	.210,-2
43	.286,-2	.430,-2	.423,-2	.295,-2	.265,-2
44	.250,-2	.310,-2	.434,-2	.334,-2	.270,-2
45	.246,-2	.243,-2	.380,-2	.370,-2	.240,-2
46	.402,-2	.344,-2	.348,-2	.340,-2	.268,-2
47	.511,-2	.302,-2	.437,-2	.311,-2	.231,-2
48	.402,-2	.262,-2	.435,-2	.434,-2	.209,-2
49	.430,-2	.234,-2	.341,-2	.365,-2	.194,-2
50	.348,-2	.350,-2	.355,-2	.350,-2	.245,-2
51	.334,-2	.434,-2	.389,-2	.286,-2	.262,-2
52	.390,-2	.340,-2	.279,-2	.335,-2	.230,-2
53	.405,-2	.201,-2	.371,-2	.399,-2	.205,-2
54	.336,-2	.240,-2	.477,-2	.314,-2	.269,-2
55	.367,-2	.327,-2	.457,-2	.267,-2	.273,-2
56	.400,-2	.293,-2	.350,-2	.308,-2	.235,-2
57	.346,-2	.295,-2	.293,-2	.400,-2	.226,-2
58	.288,-2	.302,-2	.346,-2	.456,-2	.199,-2
59	.298,-2	.202,-2	.331,-2	.335,-2	.183,-2
60	.278,-2	.133,-2	.269,-2	.211,-2	.159,-2



Run No. 43; u component

	Anemometer Position Number				
n	1	2	3	4	5
00	.424	.337	.352	.434	.398
01	.303	.284	.264	.304	.330
02	.215	.153	.140	.199	.204
03	.112	.812,-1	.710,-1	.833,-1	.114
04	.000,-1	.621,-1	.534,-1	.544,-1	.714,-1
05	.407,-1	.477,-1	.431,-1	.612,-1	.544,-1
06	.223,-1	.302,-1	.297,-1	.505,-1	.446,-1
07	.107,-1	.196,-1	.243,-1	.397,-1	.458,-1
08	.135,-1	.186,-1	.248,-1	.404,-1	.433,-1
09	.147,-1	.195,-1	.227,-1	.437,-1	.337,-1
10	.196,-1	.171,-1	.211,-1	.299,-1	.211,-1
11	.200,-1	.148,-1	.179,-1	.210,-1	.152,-1
12	.175,-1	.130,-1	.165,-1	.148,-1	.135,-1
13	.154,-1	.961,-2	.128,-1	.143,-1	.121,-1
14	.127,-1	.704,-2	.951,-2	.171,-1	.135,-1
15	.922,-2	.711,-2	.822,-2	.205,-1	.124,-1
16	.120,-1	.914,-2	.696,-2	.201,-1	.949,-2
17	.128,-1	.104,-1	.748,-2	.170,-1	.924,-2
18	.907,-2	.774,-2	.877,-2	.127,-1	.924,-2
19	.736,-2	.434,-2	.691,-2	.114,-1	.853,-2
20	.644,-2	.537,-2	.717,-2	.108,-1	.843,-2
21	.765,-2	.780,-2	.884,-2	.973,-2	.826,-2
22	.662,-2	.751,-2	.635,-2	.813,-2	.910,-2
23	.440,-2	.567,-2	.492,-2	.799,-2	.113,-1
24	.396,-2	.451,-2	.450,-2	.674,-2	.116,-1
25	.436,-2	.420,-2	.432,-2	.608,-2	.951,-2
26	.547,-2	.428,-2	.492,-2	.850,-2	.858,-2
27	.578,-2	.388,-2	.431,-2	.866,-2	.899,-2
28	.571,-2	.371,-2	.377,-2	.749,-2	.751,-2
29	.531,-2	.396,-2	.379,-2	.725,-2	.608,-2
30	.482,-2	.402,-2	.278,-2	.601,-2	.685,-2
31	.497,-2	.371,-2	.263,-2	.575,-2	.709,-2
32	.537,-2	.414,-2	.298,-2	.617,-2	.626,-2
33	.455,-2	.381,-2	.357,-2	.525,-2	.456,-2
34	.344,-2	.317,-2	.382,-2	.408,-2	.446,-2
35	.424,-2	.319,-2	.390,-2	.425,-2	.527,-2
36	.436,-2	.228,-2	.291,-2	.423,-2	.660,-2
37	.374,-2	.154,-2	.260,-2	.343,-2	.719,-2
38	.330,-2	.199,-2	.295,-2	.283,-2	.579,-2
39	.357,-2	.224,-2	.240,-2	.269,-2	.478,-2
40	.360,-2	.247,-2	.233,-2	.403,-2	.391,-2
41	.284,-2	.250,-2	.282,-2	.451,-2	.234,-2
42	.260,-2	.188,-2	.285,-2	.336,-2	.235,-2
43	.369,-2	.177,-2	.238,-2	.279,-2	.351,-2
44	.377,-2	.165,-2	.201,-2	.240,-2	.359,-2
45	.329,-2	.163,-2	.196,-2	.277,-2	.306,-2
46	.266,-2	.166,-2	.198,-2	.391,-2	.274,-2
47	.243,-2	.163,-2	.204,-2	.303,-2	.300,-2
48	.275,-2	.231,-2	.177,-2	.226,-2	.308,-2
49	.257,-2	.221,-2	.138,-2	.271,-2	.364,-2
50	.210,-2	.172,-2	.124,-2	.244,-2	.398,-2
51	.221,-2	.165,-2	.115,-2	.215,-2	.308,-2
52	.294,-2	.170,-2	.118,-2	.239,-2	.290,-2
53	.290,-2	.129,-2	.152,-2	.277,-2	.344,-2
54	.231,-2	.114,-2	.178,-2	.236,-2	.278,-2
55	.262,-2	.122,-2	.145,-2	.218,-2	.258,-2
56	.305,-2	.107,-2	.127,-2	.225,-2	.259,-2
57	.249,-2	.960,-3	.162,-2	.231,-2	.277,-2
58	.276,-2	.111,-2	.195,-2	.186,-2	.301,-2
59	.314,-2	.129,-2	.151,-2	.137,-2	.287,-2
60	.282,-2.	.102,-2	.968,-3	.110,-2	.236,-2

Run No. 45; v component

	Anemometer Position Number				
N	1	2	3	4	5
00	.608	.471	.532	.757	.733
01	.610	.314	.562	.511	.477
02	.165	.128	.159	.212	.186
03	.690,-1	.502,-1	.721,-1	.981,-1	.727,-1
04	.476,-1	.391,-1	.407,-1	.514,-1	.502,-1
05	.465,-1	.369,-1	.362,-1	.398,-1	.342,-1
06	.337,-1	.310,-1	.365,-1	.359,-1	.270,-1	
07	.213,-1	.202,-1	.253,-1	.248,-1	.207,-1
08	.204,-1	.159,-1	.147,-1	.156,-1	.160,-1
09	.219,-1	.157,-1	.112,-1	.145,-1	.104,-1
10	.131,-1	.816,-2	.965,-2	.125,-1	.102,-1
11	.959,-2	.765,-2	.991,-2	.150,-1	.132,-1
12	.101,-1	.883,-2	.101,-1	.158,-1	.140,-1
13	.898,-2	.898,-2	.795,-2	.120,-1	.137,-1
14	.676,-2	.799,-2	.750,-2	.106,-1	.839,-2
15	.542,-2	.6[illegible],-2	.727,-2	.819,-2	.824,-2
16	.554,-2	.458,-2	.575,-2	.692,-2	.100,-1
17	.653,-2	.417,-2	.504,-2	.358,-2	.944,-2
18	.577,-2	.448,-2	.586,-2	.589,-2	.823,-2
19	.491,-2	.557,-2	.564,-2	.545,-2	.655,-2
20	.614,-2	.504,-2	.546,-2	.616,-2	.570,-2
21	.507,-2	.472,-2	.591,-2	.679,-2	.559,-2
22	.534,-2	.[illegible],-2	.541,-2	.524,-2	.645,-2
23	.597,-2	.558,-2	.519,-2	.518,-2	.519,-2
24	.590,-2	.358,-2	.597,-2	.629,-2	.468,-2
25	.455,-2	.509,-2	.448,-2	.558,-2	.578,-2
26	.357,-2	.546,-2	.684,-2	.451,-2	.634,-2
27	.[illegible],-2	.505,-2	.[illegible],-2	.447,-2	.641,-2
28	.240,-2	.299,-2	.351,-2	.359,-2	.598,-2
29	.[illegible],-2	.245,-2	.213,-2	.279,-2	.321,-2
30	.348,-2	.278,-2	.246,-2	.266,-2	.526,-2
31	.312,-2	.301,-2	.309,-2	.463,-2	.455,-2
32	.380,-2	.337,-2	.370,-2	.348,-2	.401,-2
33	.302,-2	.[illegible],-2	.343,-2	.339,-2	.333,-2
34	.204,-2	.207,-2	.307,-2	.298,-2	.303,-2
35	.229,-2	.197,-2	.299, 2	.254,-2	.335,-2
36	.275,-2	.198,-2	.260,-2	.268,-2	.297,-2
37	.350,-2	.280,-2	.[illegible],-2	.255,-2	.296,-2
38	.346,-2	.311,-2	.289,-2	.378,-2	.[illegible],-2
39	.278,-2	.252,-2	.268,-2	.337,-2	.301,-2
40	.339,-2	.190,-2	.264,-2	.287,-2	.279,-2
41	.343,-2	.188,-2	.262,-2	.289,-2	.272,-2
42	.301,-2	.183,-2	.199,-2	.265,-2	.227,-2
43	.288,-2	.192,-2	.219,-2	.300,-2	.284,-2
44	.210,-2	.180,-2	.289,-2	.320,-2	.271,-2
45	.293,-2	.190,-2	.222,-2	.266,-2	.308,-2
46	.300,-2	.197,-2	.180,-2	.281,-2	.327,-2
47	.281,-2	.289,-2	.191,-2	.180,-2	.261,-2
48	.376,-2	.336,-2	.193,-2	.216,-2	.214,-2
49	.333,-2	.245,-2	.242,-2	.256,-2	.277,-2
50	.318,-2	.186,-2	.295,-2	.229,-2	.296,-2
51	.366,-2	.214,-2	.288,-2	.222,-2	.268,-2
52	.315,-2	.223,-2	.270,-2	.253,-2	.272,-2
53	.287,-2	.171,-2	.271,-2	.300,-2	.271,-2
54	.259,-2	.183,-2	.254,-2	.287,-2	.262,-2
55	.202,-2	.182,-2	.191,-2	.256,-2	.275,-2
56	.277,-2	.227,-2	.168,-2	.194,-2	.244,-2
57	.398,-2	.253,-2	.122,-2	.157,-2	.227,-2
58	.409,-2	.[illegible],-2	.165,-2	.198,-2	.315,-2
59	.312,-2	.296,-2	.247,-2	.211,-2	.305,-2
60	.223,-2	.270,-2	.243,-2	.194,-2	.222,-2

Run No. 43; w component

	Anemometer Position Number				
N	1	2	3	4	5
00	.515,-2	.605,-2	.604,-2	.551,-2	.401,-2
01	.678,-2	.509,-2	.624,-2	.475,-2	.445,-2
02	.633,-2	.505,-2	.580,-2	.378,-2	.519,-2
03	.530,-2	.440,-2	.507,-2	.299,-2	.601,-2
04	.602,-2	.426,-2	.560,-2	.380,-2	.592,-2
05	.526,-2	.449,-2	.684,-2	.610,-2	.424,-2
06	.440,-2	.470,-2	.597,-2	.768,-2	.334,-2
07	.417,-2	.352,-2	.499,-2	.613,-2	.300,-2
08	.397,-2	.284,-2	.448,-2	.412,-2	.266,-2
09	.356,-2	.350,-2	.455,-2	.328,-2	.359,-2
10	.360,-2	.342,-2	.416,-2	.270,-2	.371,-2
11	.344,-2	.300,-2	.400,-2	.293,-2	.279,-2
12	.360,-2	.237,-2	.411,-2	.307,-2	.229,-2
13	.427,-2	.220,-2	.305,-2	.325,-2	.247,-2
14	.368,-2	.172,-2	.197,-2	.284,-2	.244,-2
15	.280,-2	.225,-2	.164,-2	.342,-2	.253,-2
16	.297,-2	.207,-2	.250,-2	.455,-2	.198,-2
17	.318,-2	.310,-2	.288,-2	.420,-2	.146,-2
18	.350,-2	.248,-2	.254,-2	.341,-2	.228,-2
19	.315,-2	.243,-2	.305,-2	.315,-2	.237,-2
20	.279,-2	.217,-2	.329,-2	.362,-2	.255,-2
21	.256,-2	.212,-2	.301,-2	.257,-2	.208,-2
22	.212,-2	.156,-2	.283,-2	.213,-2	.194,-2
23	.206,-2	.204,-2	.191,-2	.276,-2	.220,-2
24	.205,-2	.279,-2	.221,-2	.300,-2	.180,-2
25	.250,-2	.248,-2	.240,-2	.225,-2	.152,-2
26	.267,-2	.213,-2	.269,-2	.265,-2	.175,-2
27	.220,-2	.253,-2	.259,-2	.305,-2	.194,-2
28	.216,-2	.247,-2	.184,-2	.310,-2	.184,-2
29	.275,-2	.153,-2	.216,-2	.242,-2	.163,-2
30	.224,-2	.192,-2	.208,-2	.203,-2	.186,-2
31	.152,-2	.172,-2	.182,-2	.271,-2	.228,-2
32	.150,-2	.187,-2	.179,-2	.344,-2	.212,-2
33	.210,-2	.143,-2	.168,-2	.305,-2	.211,-2
34	.248,-2	.150,-2	.214,-2	.217,-2	.189,-2
35	.315,-2	.155,-2	.240,-2	.227,-2	.176,-2
36	.288,-2	.107,-2	.235,-2	.215,-2	.230,-2
37	.222,-2	.196,-2	.255,-2	.200,-2	.207,-2
38	.222,-2	.219,-2	.250,-2	.290,-2	.190,-2
39	.273,-2	.188,-2	.256,-2	.201,-2	.151,-2
40	.270,-2	.192,-2	.242,-2	.210,-2	.187,-2
41	.244,-2	.144,-2	.254,-2	.205,-2	.198,-2
42	.208,-2	.197,-2	.222,-2	.207,-2	.189,-2
43	.165,-2	.216,-2	.224,-2	.270,-2	.242,-2
44	.152,-2	.272,-2	.259,-2	.227,-2	.190,-2
45	.180,-2	.200,-2	.206,-2	.209,-2	.185,-2
46	.210,-2	.209,-2	.215,-2	.197,-2	.225,-2
47	.185,-2	.219,-2	.190,-2	.216,-2	.205,-2
48	.188,-2	.215,-2	.208,-2	.231,-2	.182,-2
49	.197,-2	.187,-2	.224,-2	.185,-2	.156,-2
50	.273,-2	.146,-2	.240,-2	.191,-2	.168,-2
51	.322,-2	.135,-2	.221,-2	.223,-2	.181,-2
52	.360,-2	.164,-2	.221,-2	.224,-2	.190,-2
53	.365,-2	.155,-2	.204,-2	.171,-2	.214,-2
54	.337,-2	.190,-2	.198,-2	.199,-2	.200,-2
55	.305,-2	.218,-2	.245,-2	.257,-2	.179,-2
56	.265,-2	.197,-2	.272,-2	.301,-2	.172,-2
57	.309,-2	.185,-2	.253,-2	.335,-2	.122,-2
58	.359,-2	.191,-2	.239,-2	.306,-2	.258,-3
59	.286,-2	.187,-2	.171,-2	.215,-2	.995,-3
60	.217,-2	.169,-2	.120,-2	.154,-2	.994,-3

Run No. 44; u component

	Anemometer Position Number				
N	1	2	3	4	5
00	.416	.342	.691	.319	.709
01	.292	.239	.495	.219	.545
02	.140	.109	.214	.968,-1	.232
03	.116	.868,-1	.131	.104	.126
04	.944,-1	.885,-1	.109	.156	.104
05	.565,-1	.526,-1	.720,-1	.639,-1	.815,-1
06	.476,-1	.457,-1	.545,-1	.452,-1	.617,-1
07	.459,-1	.442,-1	.540,-1	.441,-1	.498,-1
08	.[illegible]	.[illegible]	.433,-1	.351,-1	.[illegible]
09	.226,-1	.180,-1	.[illegible]	.185,-1	.[illegible]
10	.191,-1	.175,-1	.238,-1	.149,-1	.315,-1
11	.167,-1	.165,-1	.232,-1	.152,-1	.[illegible]
12	.172,-1	.134,-1	.237,-1	.120,-1	.206,-1
13	.162,-1	.110,-1	.221,-1	.127,-1	.[illegible]
14	.121,-1	.101,-1	.193,-1	.134,-1	.[illegible]
15	.116,-1	.119,-1	.115,-1	.150,-1	.194,-1
16	.131,-1	.139,-1	.167,-1	.148,-1	.151,-1
17	.114,-1	.[illegible]	.[illegible]	.112,-1	.[illegible]
18	.104,-1	.[illegible]	.[illegible]	.[illegible]	.[illegible]
19	.950,-2	.810,-2	.172,-1	.[illegible]	.[illegible]
20	.667,-2	.[illegible]	.136,-1	.115,-1	.156,-1
21	.782,-2	.[illegible]	.[illegible]	.122,-1	.[illegible]
22	.[illegible]	.[illegible]	.[illegible]	.[illegible]	.[illegible]
23	.[illegible]	.[illegible]	.[illegible]	.[illegible]	.[illegible]
24	.[illegible]	.[illegible]	.[illegible]	.[illegible]	.[illegible]
25	.[illegible]	.[illegible]	.[illegible]	.[illegible]	.[illegible]
26	.[illegible]	.[illegible]	.[illegible]	.[illegible]	.[illegible]
27	.[illegible]	.[illegible]	.[illegible]	.[illegible]	.[illegible]
28	.[illegible]	.[illegible]	.[illegible]	.[illegible]	.[illegible]
29	.[illegible]	.[illegible]	.[illegible]	.[illegible]	.[illegible]
30	.665,-2	.[illegible]	.[illegible]	.[illegible]	.[illegible]
31	.[illegible]	.[illegible]	.[illegible]	.[illegible]	.[illegible]
32	.[illegible]	.[illegible]	.[illegible]	.[illegible]	.[illegible]
33	.[illegible]	.[illegible]	.[illegible]	.[illegible]	.[illegible]
34	.[illegible]	.[illegible]	.[illegible]	.[illegible]	.[illegible]
35	.[illegible]	.[illegible]	.[illegible]	.[illegible]	.[illegible]
36	.[illegible]	.[illegible]	.[illegible]	.[illegible]	.[illegible]
37	.[illegible]	.[illegible]	.[illegible]	.[illegible]	.[illegible]
38	.[illegible]	.[illegible]	.[illegible]	.[illegible]	.[illegible]
39	.[illegible]	.[illegible]	.[illegible]	.[illegible]	.[illegible]
40	.[illegible]	.[illegible]	.[illegible]	.[illegible]	.[illegible]
41	.[illegible]	.[illegible]	.[illegible]	.[illegible]	.[illegible]
42	.[illegible]	.[illegible]	.[illegible]	.[illegible]	.[illegible]
43	.[illegible]	.[illegible]	.[illegible]	.[illegible]	.[illegible]
44	.[illegible]	.[illegible]	.[illegible]	.[illegible]	.[illegible]
45	.[illegible]	.[illegible]	.[illegible]	.[illegible]	.[illegible]
46	.[illegible]	.[illegible]	.[illegible]	.[illegible]	.[illegible]
47	.[illegible]	.[illegible]	.[illegible]	.[illegible]	.[illegible]
48	.[illegible]	.[illegible]	.[illegible]	.[illegible]	.[illegible]
49	.[illegible]	.[illegible]	.[illegible]	.[illegible]	.[illegible]
50	.[illegible]	.[illegible]	.[illegible]	.[illegible]	.[illegible]
51	.[illegible]	.[illegible]	.[illegible]	.[illegible]	.[illegible]
52	.[illegible]	.[illegible]	.[illegible]	.[illegible]	.[illegible]
53	.[illegible]	.[illegible]	.[illegible]	.[illegible]	.[illegible]
54	.[illegible]	.[illegible]	.[illegible]	.[illegible]	.[illegible]
55	.[illegible]	.[illegible]	.[illegible]	.[illegible]	.[illegible]
56	.[illegible]	.[illegible]	.[illegible]	.[illegible]	.[illegible]
57	.[illegible]	.[illegible]	.[illegible]	.[illegible]	.[illegible]
58	.[illegible]	.[illegible]	.[illegible]	.[illegible]	.[illegible]
59	.[illegible]	.[illegible]	.[illegible]	.[illegible]	.[illegible]
60	.[illegible]	.[illegible]	.[illegible]	.[illegible]	.[illegible]

Run No. 44; v component

N	Anemometer Position Number 1	2	3	4	5
00	.120,+1	.907	.186,+1	.964	.870
01	.678	.515	.106,+1	.552	.602
02	.185	.140	.267	.150	.184
03	.103	.785,-1	.138	.685,-1	.696,-1
04	.728,-1	.555,-1	.905,-1	.417,-1	.474,-1
05	.499,-1	.373,-1	.559,-1	.326,-1	.325,-1
06	.370,-1	.241,-1	.344,-1	.226,-1	.243,-1
07	.300,-1	.161,-1	.251,-1	.231,-1	.176,-1
08	.212,-1	.118,-1	.228,-1	.215,-1	.212,-1
09	.180,-1	.123,-1	.219,-1	.174,-1	.185,-1
10	.140,-1	.989,-2	.179,-1	.100,-1	.140,-1
11	.169,-1	.124,-1	.169,-1	.660,-2	.147,-1
12	.152,-1	.107,-1	.141,-1	.113,-1	.104,-1
13	.119,-1	.743,-2	.912,-2	.137,-1	.695,-2
14	.117,-1	.780,-2	.912,-2	.773,-2	.623,-2
15	.104,-1	.662,-2	.113,-1	.487,-2	.108,-1
16	.916,-2	.654,-2	.102,-1	.621,-2	.150,-1
17	.787,-2	.696,-2	.114,-1	.610,-2	.148,-1
18	.667,-2	.716,-2	.159,-1	.459,-2	.114,-1
19	.745,-2	.693,-2	.169,-1	.459,-2	.611,-2
20	.909,-2	.632,-2	.173,-1	.535,-2	.429,-2
21	.815,-2	.611,-2	.111,-1	.547,-2	.740,-2
22	.639,-2	.562,-2	.868,-2	.463,-2	.756,-2
23	.678,-2	.465,-2	.896,-2	.370,-2	.522,-2
24	.600,-2	.447,-2	.102,-1	.292,-2	.477,-2
25	.424,-2	.398,-2	.999,-2	.317,-2	.627,-2
26	.454,-2	.360,-2	.689,-2	.343,-2	.758,-2
27	.576,-2	.379,-2	.489,-2	.357,-2	.635,-2
28	.612,-2	.447,-2	.579,-2	.444,-2	.459,-2
29	.566,-2	.487,-2	.620,-2	.479,-2	.498,-2
30	.532,-2	.367,-2	.496,-2	.324,-2	.529,-2
31	.374,-2	.207,-2	.447,-2	.242,-2	.437,-2
32	.288,-2	.226,-2	.632,-2	.251,-2	.454,-2
33	.373,-2	.293,-2	.770,-2	.335,-2	.463,-2
34	.532,-2	.461,-2	.723,-2	.305,-2	.366,-2
35	.510,-2	.479,-2	.872,-2	.319,-2	.394,-2
36	.384,-2	.357,-2	.878,-2	.302,-2	.349,-2
37	.347,-2	.376,-2	.700,-2	.265,-2	.309,-2
38	.472,-2	.437,-2	.871,-2	.285,-2	.375,-2
39	.520,-2	.465,-2	.107,-1	.309,-2	.411,-2
40	.411,-2	.457,-2	.699,-2	.267,-2	.373,-2
41	.421,-2	.405,-2	.424,-2	.240,-2	.396,-2
42	.426,-2	.350,-2	.390,-2	.225,-2	.423,-2
43	.491,-2	.316,-2	.505,-2	.199,-2	.466,-2
44	.505,-2	.301,-2	.977,-2	.170,-2	.508,-2
45	.489,-2	.413,-2	.832,-2	.161,-2	.501,-2
46	.406,-2	.412,-2	.716,-2	.213,-2	.439,-2
47	.314,-2	.359,-2	.722,-2	.259,-2	.382,-2
48	.373,-2	.397,-2	.670,-2	.204,-2	.293,-2
49	.493,-2	.402,-2	.474,-2	.219,-2	.355,-2
50	.450,-2	.415,-2	.554,-2	.200,-2	.444,-2
51	.427,-2	.334,-2	.734,-2	.274,-2	.414,-2
52	.564,-2	.330,-2	.622,-2	.273,-2	.336,-2
53	.478,-2	.315,-2	.706,-2	.241,-2	.418,-2
54	.283,-2	.356,-2	.568,-2	.234,-2	.438,-2
55	.352,-2	.359,-2	.416,-2	.193,-2	.408,-2
56	.450,-2	.305,-2	.460,-2	.183,-2	.600,-2
57	.448,-2	.280,-2	.451,-2	.224,-2	.647,-2
58	.375,-2	.320,-2	.420,-2	.262,-2	.432,-2
59	.273,-2	.256,-2	.391,-2	.243,-2	.326,-2
60	.206,-2	.170,-2	.311,-2	.196,-2	.273,-2

Run No. 44; w component

N	Anemometer Position Number 1	2	3	4	5
00	.[illegible],-2	.[illegible],-2	.468,-2	.[illegible],-2	.482,-2
01	.552,-2	.704,-2	.654,-2	.105,-1	.608,-2
02	.705,-2	.621,-2	.746,-2	.107,-1	.63[illegible],-2
03	.695,-2	.[illegible]10,-2	.611,-2	.850,-2	.440,-2
04	.515,-2	.412,-2	.[illegible]40,-2	.750,-2	.557,-2
05	.470,-2	.321,-2	.106,-1	.558,-2	.307,-2
06	.40[illegible],-2	.300,-2	.740,-2	.56[illegible],-2	.35[illegible],-2
07	.355,-2	.307,-2	.716,-2	.62[illegible],-2	.35[illegible],-2
08	.3[illegible],-2	.235,-2	.552,-2	.386,-2	.317,-2
09	.345,-2	.2[illegible]5,-2	.45[illegible],-2	.321,-2	.374,-2
10	.4[illegible],-2	.[illegible]46,-2	.426,-2	.422,-2	.32[illegible],-2
11	.5[illegible],-2	.30[illegible],-2	.348,-2	.432,-2	.321,-2
12	.4[illegible],-2	.271,-2	.3[illegible],-2	.3[illegible],-2	.475,-2
13	.3[illegible],-2	.197,-2	.[illegible]74,-2	.3[illegible],-2	.[illegible]21,-2
14	.302,-2	.[illegible]21,-2	.[illegible],-2	.473,-2	.[illegible]17,-2
15	.3[illegible],-2	.[illegible]91,-2	.4[illegible],-2	.44[illegible],-2	.3[illegible],-2
16	.4[illegible],-2	.[illegible]96,-2	.[illegible]17,-2	.410,-2	.329,-2
17	.[illegible]46,-2	.3[illegible],-2	.[illegible]07,-2	.337,-2	.[illegible]17,-2
18	.[illegible]00,-2	.[illegible]15,-2	.[illegible]04,-2	.3[illegible],-2	.317,-2
19	.[illegible]22,-2	.[illegible]31,-2	.430,-2	.383,-2	.321,-2
20	.[illegible]40,-2	.[illegible]12,-2	.[illegible]13,-2	.[illegible]74,-2	.[illegible]01,-2
21	.[illegible]67,-2	.[illegible]50,-2	.[illegible]51,-2	.[illegible]00,-2	.[illegible]15,-2
22	.457,-2	.3[illegible],-2	.[illegible]17,-2	.[illegible]01,-2	.[illegible]05,-2
23	.[illegible]73,-2	.[illegible]20,-2	.[illegible]08,-2	.[illegible]00,-2	.[illegible]10,-2
24	.[illegible]34,-2	.[illegible]21,-2	.[illegible]42,-2	.[illegible]46,-2	.[illegible]47,-2
25	.[illegible]44,-2	.[illegible]01,-2	.[illegible]14,-2	.[illegible]91,-2	.[illegible]55,-2
26	.[illegible]37,-2	.[illegible]47,-2	.[illegible]50,-2	.[illegible]11,-2	.[illegible]70,-2
27	.[illegible]55,-2	.[illegible]15,-2	.[illegible]91,-2	.[illegible]77,-2	.[illegible]44,-2
28	.[illegible]96,-2	.[illegible]41,-2	.[illegible]60,-2	.[illegible]47,-2	.[illegible]15,-2
29	.[illegible]57,-2	.[illegible]27,-2	.[illegible]71,-2	.[illegible]57,-2	.[illegible]11,-2
30	.[illegible]07,-2	.[illegible]71,-2	.[illegible]30,-2	.[illegible]10,-2	.[illegible]09,-2
31	.[illegible]06,-2	.[illegible]44,-2	.[illegible]91,-2	.[illegible]55,-2	.[illegible]21,-2
32	.[illegible]14,-2	.[illegible]15,-2	.[illegible]40,-2	.[illegible]25,-2	.[illegible]11,-2
33	.[illegible]13,-2	.[illegible]34,-2	.[illegible],-2	.[illegible]36,-2	.[illegible]14,-2
34	.[illegible]21,-2	.[illegible]14,-2	.[illegible],-2	.[illegible]54,-2	.[illegible],-2
35	.[illegible]44,-2	.[illegible]19,-2	.[illegible],-2	.[illegible]27,-2	.[illegible]46,-2
36	.[illegible]41,-2	.[illegible]17,-2	.[illegible],-2	.[illegible]47,-2	.[illegible],-2
37	.[illegible]21,-2	.[illegible]32,-2	.[illegible],-2	.[illegible],-2	.[illegible],-2
38	.[illegible]44,-2	.[illegible]20,-2	.[illegible],-2	.[illegible]43,-2	.[illegible],-2
39	.[illegible],-2	.[illegible],-2	.[illegible],-2	.[illegible],-2	.[illegible],-2
40	.[illegible],-2	.[illegible],-2	.[illegible],-2	.[illegible],-2	.[illegible],-2
41	.[illegible],-2	.[illegible],-2	.[illegible],-2	.[illegible],-2	.[illegible],-2
42	.[illegible],-2	.[illegible],-2	.[illegible],-2	.[illegible],-2	.[illegible],-2
43	.[illegible],-2	.[illegible],-2	.[illegible],-2	.[illegible],-2	.[illegible],-2
44	.[illegible],-2	.[illegible],-2	.[illegible],-2	.[illegible],-2	.[illegible],-2
45	.[illegible],-2	.[illegible],-2	.[illegible],-2	.[illegible],-2	.[illegible],-2
46	.[illegible],-2	.[illegible],-2	.[illegible],-2	.[illegible],-2	.[illegible],-2
47	.[illegible],-2	.[illegible],-2	.[illegible],-2	.[illegible],-2	.[illegible],-2
48	.[illegible],-2	.[illegible],-2	.[illegible],-2	.[illegible],-2	.[illegible],-2
49	.[illegible],-2	.[illegible],-2	.[illegible],-2	.[illegible],-2	.[illegible],-2
50	.[illegible],-2	.[illegible],-2	.[illegible],-2	.[illegible],-2	.[illegible],-2
51	.[illegible],-2	.[illegible],-2	.[illegible],-2	.[illegible],-2	.[illegible],-2
52	.[illegible],-2	.[illegible],-2	.[illegible],-2	.[illegible],-2	.[illegible],-2
53	.[illegible],-2	.[illegible],-2	.[illegible],-2	.[illegible],-2	.[illegible],-2
54	.[illegible],-2	.[illegible],-2	.[illegible],-2	.[illegible],-2	.[illegible],-2
55	.[illegible],-2	.[illegible],-2	.[illegible],-2	.[illegible],-2	.[illegible],-2
56	.[illegible],-2	.[illegible],-2	.[illegible],-2	.[illegible],-2	.[illegible],-2
57	.[illegible],-2	.[illegible],-2	.[illegible],-2	.[illegible],-2	.[illegible],-2
58	.[illegible],-2	.[illegible],-2	.[illegible],-2	.[illegible],-2	.[illegible],-2
59	.[illegible],-2	.[illegible],-2	.[illegible],-2	.[illegible],-2	.[illegible],-2
60	.[illegible],-2	.[illegible],-2	.[illegible],-2	.[illegible],-2	.[illegible],-2

Run No. 45; u component

N	Anemometer Position Number 1	2	3	4	5
00	.145	.146		.184	.276
01	.154	.125		.142	.241
02	.107	.698,-1		.829,-1	.145
03	.814,-1	.714,-1		.463,-1	.744,-1
04	.671,-1	.608,-1		.267,-1	.621,-1
05	.481,-1	.422,-1		.216,-1	.529,-1
06	.[illegible],-1	.[illegible],-1		.210,-1	.[illegible],-1
07	.246,-1	.250,-1		.189,-1	.658,-1
08	.259,-1	.220,-1		.197,-1	.455,-1
09	.225,-1	.208,-1		.168,-1	.372,-1
10	.167,-1	.154,-1		.157,-1	.326,-1
11	.225,-1	.141,-1		.100,-1	.258,-1
12	.187,-1	.127,-1		.781,-2	.177,-1
13	.150,-1	.124,-1		.771,-2	.184,-1
14	.190,-1	.[illegible],-2		.760,-2	.211,-1
15	.[illegible],-2	.[illegible],-2		.721,-2	.[illegible],-1
16	.[illegible],-2	.124,-1		.701,-2	.[illegible],-1
17	.[illegible],-1	.[illegible],-1		.[illegible],-2	.[illegible],-1
18	.[illegible],-2	.[illegible],-2		.[illegible],-2	.125,-1
19	.[illegible],-2	.[illegible],-2		.[illegible],-2	.[illegible],-1
20	.[illegible],-2	.[illegible],-2		.[illegible],-2	.[illegible],-1
21	.[illegible],-2	.[illegible],-1		.[illegible],-2	.[illegible],-1
22	.[illegible],-2	.[illegible],-2		.[illegible],-2	.[illegible],-1
23	.[illegible],-2	.[illegible],-2		.[illegible],-2	.[illegible],-1
24	.[illegible],-2	.[illegible],-2		.[illegible],-2	.[illegible],-2
25	.[illegible],-2	.[illegible],-2		.[illegible],-2	.[illegible],-2
26	.[illegible],-2	.[illegible],-2		.[illegible],-2	.[illegible],-2
27	.[illegible],-2	.[illegible],-2		.[illegible],-2	.[illegible],-2
28	.[illegible],-2	.[illegible],-2		.[illegible],-2	.[illegible],-2
29	.[illegible],-2	.[illegible],-2		.[illegible],-2	.[illegible],-2
30	.[illegible],-2	.[illegible],-2		.[illegible],-2	.[illegible],-2
31	.[illegible],-2	.[illegible],-2		.[illegible],-2	.[illegible],-2
32	.[illegible],-2	.[illegible],-2		.[illegible],-2	.[illegible],-1
33	.[illegible],-2	.[illegible],-2		.[illegible],-2	.101,-1
34	.[illegible],-2	.[illegible],-2		.[illegible],-2	.[illegible],-2
35	.[illegible],-2	.[illegible],-2		.[illegible],-2	.[illegible],-2
36	.[illegible],-2	.[illegible],-2		.[illegible],-2	.[illegible],-2
37	.[illegible],-2	.[illegible],-2		.[illegible],-2	.[illegible],-2
38	.[illegible],-2	.[illegible],-2		.[illegible],-2	.[illegible],-2
39	.[illegible],-2	.[illegible],-2		.[illegible],-2	.[illegible],-2
40	.[illegible],-2	.[illegible],-2		.[illegible],-2	.[illegible],-2
41	.[illegible],-2	.[illegible],-2		.[illegible],-2	.[illegible],-2
42	.[illegible],-2	.[illegible],-2		.[illegible],-2	.[illegible],-2
43	.[illegible],-2	.[illegible],-2		.[illegible],-2	.[illegible],-2
44	.[illegible],-2	.[illegible],-2		.[illegible],-2	.[illegible],-2
45	.[illegible],-2	.[illegible],-2		.[illegible],-2	.[illegible],-2
46	.[illegible],-2	.[illegible],-2		.[illegible],-2	.[illegible],-2
47	.[illegible],-2	.[illegible],-2		.[illegible],-2	.[illegible],-2
48	.[illegible],-2	.[illegible],-2		.[illegible],-2	.[illegible],-2
49	.[illegible],-2	.[illegible],-2		.[illegible],-2	.[illegible],-2
50	.[illegible],-2	.[illegible],-2		.[illegible],-2	.[illegible],-2
51	.[illegible],-2	.[illegible],-2		.[illegible],-2	.[illegible],-2
52	.[illegible],-2	.[illegible],-2		.[illegible],-2	.[illegible],-2
53	.[illegible],-2	.[illegible],-2		.[illegible],-2	.[illegible],-2
54	.[illegible],-2	.[illegible],-2		.[illegible],-2	.[illegible],-2
55	.[illegible],-2	.[illegible],-2		.[illegible],-2	.[illegible],-2
56	.[illegible],-2	.[illegible],-2		.[illegible],-2	.[illegible],-2
57	.[illegible],-2	.[illegible],-2		.[illegible],-2	.[illegible],-2
58	.[illegible],-2	.[illegible],-2		.[illegible],-2	.[illegible],-2
59	.[illegible],-2	.[illegible],-2		.[illegible],-2	.[illegible],-2
60	.[illegible],-2	.[illegible],-2		.[illegible],-2	.[illegible],-2

Run No. 45; v component

N	Anemometer Position Number 1	2	3	4	5
00	.259	.240		.194	.168
01	.158	.150		.132	.131
02	.540,-1	.530,-1		.488,-1	.606,-1
03	.308,-1	.280,-1		.214,-1	.283,-1
04	.165,-1	.166,-1		.201,-1	.223,-1
05	.854,-2	.108,-1		.209,-1	.200,-1
06	.860,-2	.938,-2		.179,-1	.188,-1
07	.121,-1	.859,-2		.117,-1	.195,-1
08	.104,-1	.751,-2		.938,-2	.149,-1
09	.817,-2	.754,-2		.767,-2	.112,-1
10	.941,-2	.799,-2		.548,-2	.100,-1
11	.101,-1	.873,-2		.599,-2	.855,-2
12	.618,-2	.639,-2		.527,-2	.817,-2
13	.626,-2	.614,-2		.475,-2	.794,-2
14	.747,-2	.697,-2		.549,-2	.709,-2
15	.644,-2	.614,-2		.708,-2	.966,-2
16	.577,-2	.630,-2		.640,-2	.922,-2
17	.594,-2	.682,-2		.334,-2	.710,-2
18	.592,-2	.602,-2		.354,-2	.675,-2
19	.688,-2	.510,-2		.466,-2	.799,-2
20	.631,-2	.483,-2		.432,-2	.767,-2
21	.501,-2	.429,-2		.385,-2	.633,-2
22	.423,-2	.334,-2		.344,-2	.683,-2
23	.405,-2	.235,-2		.436,-2	.659,-2
24	.356,-2	.313,-2		.418,-2	.583,-2
25	.357,-2	.347,-2		.427,-2	.604,-2
26	.448,-2	.401,-2		.425,-2	.503,-2
27	.475,-2	.353,-2		.322,-2	.443,-2
28	.494,-2	.341,-2		.292,-2	.358,-2
29	.405,-2	.357,-2		.313,-2	.404,-2
30	.261,-2	.332,-2		.280,-2	.466,-2
31	.218,-2	.299,-2		.238,-2	.556,-2
32	.226,-2	.255,-2		.197,-2	.509,-2
33	.288,-2	.300,-2		.181,-2	.353,-2
34	.305,-2	.385,-2		.210,-2	.427,-2
35	.258,-2	.369,-2		.245,-2	.534,-2
36	.288,-2	.326,-2		.258,-2	.472,-2
37	.291,-2	.428,-2		.361,-2	.454,-2
38	.351,-2	.496,-2		.390,-2	.392,-2
39	.350,-2	.521,-2		.332,-2	.305,-2
40	.364,-2	.428,-2		.301,-2	.388,-2
41	.324,-2	.327,-2		.238,-2	.326,-2
42	.412,-2	.345,-2		.208,-2	.366,-2
43	.389,-2	.347,-2		.218,-2	.417,-2
44	.289,-2	.401,-2		.198,-2	.348,-2
45	.426,-2	.439,-2		.197,-2	.326,-2
46	.423,-2	.301,-2		.205,-2	.356,-2
47	.339,-2	.287,-2		.259,-2	.440,-2
48	.338,-2	.398,-2		.259,-2	.433,-2
49	.355,-2	.370,-2		.238,-2	.331,-2
50	.339,-2	.297,-2		.259,-2	.239,-2
51	.258,-2	.344,-2		.236,-2	.251,-2
52	.246,-2	.327,-2		.208,-2	.247,-2
53	.305,-2	.284,-2		.175,-2	.162,-2
54	.273,-2	.370,-2		.193,-2	.160,-2
55	.266,-2	.364,-2		.216,-2	.243,-2
56	.251,-2	.283,-2		.300,-2	.316,-2
57	.222,-2	.305,-2		.296,-2	.356,-2
58	.217,-2	.317,-2		.217,-2	.367,-2
59	.245,-2	.264,-2		.205,-2	.285,-2
60	.274,-2	.211,-2		.133,-2	.224,-2

Run No. 45; w component

N	Anemometer Position Number 1	2	3	4	5
00	.428,-2	.347,-2		.311,-2	.197,-2
01	.414,-2	.368,-2		.400,-2	.247,-2
02	.320,-2	.365,-2		.402,-2	.282,-2
03	.368,-2	.411,-2		.377,-2	.257,-2
04	.478,-2	.351,-2		.454,-2	.260,-2
05	.398,-2	.250,-2		.452,-2	.285,-2
06	.273,-2	.208,-2		.360,-2	.283,-2
07	.228,-2	.228,-2		.334,-2	.274,-2
08	.281,-2	.241,-2		.416,-2	.269,-2
09	.351,-2	.211,-2		.371,-2	.285,-2
10	.345,-2	.161,-2		.276,-2	.282,-2
11	.397,-2	.179,-2		.255,-2	.312,-2
12	.352,-2	.219,-2		.293,-2	.314,-2
13	.305,-2	.271,-2		.361,-2	.288,-2
14	.421,-2	.322,-2		.353,-2	.278,-2
15	.369,-2	.298,-2		.275,-2	.236,-2
16	.336,-2	.298,-2		.238,-2	.272,-2
17	.381,-2	.272,-2		.262,-2	.314,-2
18	.268,-2	.250,-2		.259,-2	.254,-2
19	.165,-2	.268,-2		.254,-2	.208,-2
20	.208,-2	.255,-2		.299,-2	.184,-2
21	.325,-2	.274,-2		.379,-2	.231,-2
22	.362,-2	.287,-2		.340,-2	.322,-2
23	.352,-2	.293,-2		.278,-2	.313,-2
24	.274,-2	.331,-2		.269,-2	.186,-2
25	.216,-2	.304,-2		.246,-2	.166,-2
26	.236,-2	.241,-2		.272,-2	.163,-2
27	.301,-2	.207,-2		.285,-2	.161,-2
28	.308,-2	.158,-2		.242,-2	.162,-2
29	.244,-2	.201,-2		.223,-2	.190,-2
30	.252,-2	.266,-2		.293,-2	.198,-2
31	.291,-2	.216,-2		.326,-2	.186,-2
32	.272,-2	.209,-2		.251,-2	.218,-2
33	.221,-2	.226,-2		.219,-2	.200,-2
34	.186,-2	.204,-2		.241,-2	.224,-2
35	.220,-2	.216,-2		.236,-2	.286,-2
36	.288,-2	.252,-2		.273,-2	.209,-2
37	.272,-2	.274,-2		.298,-2	.150,-2
38	.245,-2	.269,-2		.242,-2	.164,-2
39	.270,-2	.201,-2		.204,-2	.193,-2
40	.256,-2	.175,-2		.175,-2	.237,-2
41	.215,-2	.180,-2		.174,-2	.239,-2
42	.251,-2	.206,-2		.159,-2	.210,-2
43	.311,-2	.163,-2		.193,-2	.258,-2
44	.251,-2	.111,-2		.260,-2	.268,-2
45	.194,-2	.151,-2		.194,-2	.206,-2
46	.191,-2	.168,-2		.179,-2	.159,-2
47	.214,-2	.206,-2		.193,-2	.146,-2
48	.242,-2	.217,-2		.130,-2	.170,-2
49	.230,-2	.210,-2		.132,-2	.248,-2
50	.209,-2	.244,-2		.159,-2	.255,-2
51	.169,-2	.253,-2		.159,-2	.208,-2
52	.165,-2	.236,-2		.182,-2	.172,-2
53	.212,-2	.278,-2		.205,-2	.165,-2
54	.243,-2	.261,-2		.176,-2	.150,-2
55	.233,-2	.219,-2		.154,-2	.161,-2
56	.197,-2	.325,-2		.153,-2	.187,-2
57	.209,-2	.260,-2		.171,-2	.232,-2
58	.242,-2	.229,-2		.241,-2	.190,-2
59	.206,-2	.243,-2		.233,-2	.137,-2
60	.161,-2	.201,-2		.176,-2	.128,-2

Run No. 46: u component

	Anemometer Position Number				
M	1	2	3	4	5
00	.194	.171	.136	.306	.377
01	.123	.149	.107	.223	.258
02	.951,-1	.104	.606,-1	.117	.128
03	.519,-1	.609,-1	.349,-1	.661,-1	.826,-1
04	.326,-1	.504,-1	.250,-1	.640,-1	.649,-1
05	.515,-1	.423,-1	.271,-1	.607,-1	.614,-1
06	.296,-1	.399,-1	.286,-1	.570,-1	.548,-1
07	.231,-1	.309,-1	.195,-1	.381,-1	.384,-1
08	.176,-1	.226,-1	.156,-1	.236,-1	.218,-1
09	.103,-1	.179,-1	.147,-1	.257,-1	.229,-1
10	.166,-1	.139,-1	.145,-1	.164,-1	.254,-1
11	.130,-1	.150,-1	.114,-1	.151,-1	.255,-1
12	.133,-1	.145,-1	.[illegible],-2	.134,-1	.239,-1
13	.158,-1	.115,-1	.[illegible],-2	.161,-1	.148,-1
14	.111,-1	.774,-2	.995,-2	.154,-1	.806,-1
15	.981,-2	.868,-2	.164,-1	.131,-1	.805,-1
16	.133,-1	.105,-1	.101,-1	.193,-1	.154,-1
17	.194,-1	.108,-1	.911,-2	.118,-1	.144,-1
18	.116,-1	.861,-2	.857,-2	.109,-1	.150,-1
19	.193,-1	.535,-2	.642,-2	.608,-2	.178,-1
20	.476,-2	.583,-2	.578,-2	.[illegible],-2	.184,-1
21	.701,-2	.690,-2	.701,-2	.701,-2	.155,-1
22	.670,-2	.537,-2	.[illegible],-2	.678,-2	.111,-1
23	.548,-2	.516,-2	.771,-2	.552,-2	.909,-2
24	.516,-2	.458,-2	.[illegible],-2	.547,-2	.869,-2
25	.643,-2	.564,-2	.699,-2	.656,-2	.681,-2
26	.[illegible],-2	.515,-2	.670,-2	.650,-2	.890,-2
27	.496,-2	.478,-2	.519,-2	.[illegible],-2	.851,-2
28	.557,-2	.536,-2	.561,-2	.546,-2	.856,-2
29	.641,-2	.515,-2	.816,-2	.601,-2	.775,-2
30	.501,-2	.500,-2	.[illegible],-2	.460,-2	.618,-2
31	.511,-2	.[illegible],-2	.516,-2	.[illegible],-2	.[illegible],-2
32	.[illegible],-2	.466,-2	.[illegible],-2	.661,-2	.711,-2
33	.[illegible],-2	.[illegible],-2	.[illegible],-2	.[illegible],-2	.[illegible],-2
34	.[illegible],-2	.[illegible],-2	.[illegible],-2	.[illegible],-2	.[illegible],-2
35	.[illegible],-2	.[illegible],-2	.[illegible],-2	.[illegible],-2	.[illegible],-2
36	.[illegible],-2	.[illegible],-2	.[illegible],-2	.[illegible],-2	.[illegible],-2
37	.[illegible],-2	.[illegible],-2	.[illegible],-2	.[illegible],-2	.[illegible],-2
38	.[illegible],-2	.[illegible],-2	.[illegible],-2	.[illegible],-2	.[illegible],-2
39	.[illegible],-2	.[illegible],-2	.[illegible],-2	.[illegible],-2	.[illegible],-2
40	.[illegible],-2	.[illegible],-2	.[illegible],-2	.[illegible],-2	.[illegible],-2
41	.[illegible],-2	.[illegible],-2	.[illegible],-2	.[illegible],-2	.[illegible],-2
42	.[illegible],-2	.[illegible],-2	.[illegible],-2	.[illegible],-2	.[illegible],-2
43	.[illegible],-2	.[illegible],-2	.[illegible],-2	.[illegible],-2	.[illegible],-2
44	.[illegible],-2	.[illegible],-2	.[illegible],-2	.[illegible],-2	.[illegible],-2
45	.[illegible],-2	.[illegible],-2	.[illegible],-2	.[illegible],-2	.[illegible],-2
46	.[illegible],-2	.[illegible],-2	.[illegible],-2	.[illegible],-2	.[illegible],-2
47	.[illegible],-2	.[illegible],-2	.[illegible],-2	.[illegible],-2	.[illegible],-2
48	.[illegible],-2	.[illegible],-2	.[illegible],-2	.[illegible],-2	.[illegible],-2
49	.[illegible],-2	.[illegible],-2	.[illegible],-2	.[illegible],-2	.[illegible],-2
50	.[illegible],-2	.[illegible],-2	.[illegible],-2	.[illegible],-2	.[illegible],-2
51	.[illegible],-2	.[illegible],-2	.[illegible],-2	.[illegible],-2	.[illegible],-2
52	.[illegible],-2	.[illegible],-2	.[illegible],-2	.[illegible],-2	.[illegible],-2
53	.[illegible],-2	.[illegible],-2	.[illegible],-2	.[illegible],-2	.[illegible],-2
54	.[illegible],-2	.[illegible],-2	.[illegible],-2	.[illegible],-2	.[illegible],-2
55	.[illegible],-2	.[illegible],-2	.[illegible],-2	.[illegible],-2	.[illegible],-2
56	.[illegible],-2	.[illegible],-2	.[illegible],-2	.[illegible],-2	.[illegible],-2
57	.[illegible],-2	.[illegible],-2	.[illegible],-2	.[illegible],-2	.[illegible],-2
58	.[illegible],-2	.[illegible],-2	.[illegible],-2	.[illegible],-2	.[illegible],-2
59	.[illegible],-2	.[illegible],-2	.[illegible],-2	.[illegible],-2	.[illegible],-2
60	.[illegible],-2	.[illegible],-2	.[illegible],-2	.[illegible],-2	.[illegible],-2

Run No. 46; v component

N	Anemometer Position Number 1	2	3	4	5
00	.153	.121	.147	.186	.167
01	.721,-1	.584,-1	.692,-1	.926,-1	.847,-1
02	.891,-2	.102,-1	.995,-2	.170,-1	.238,-1
03	.942,-2	.828,-2	.717,-2	.140,-1	.207,-1
04	.998,-2	.754,-2	.525,-2	.117,-1	.137,-1
05	.981,-2	.814,-2	.664,-2	.795,-2	.949,-2
06	.939,-2	.762,-2	.983,-2	.890,-2	.789,-2
07	.719,-2	.533,-2	.108,-1	.955,-2	.825,-2
08	.864,-2	.469,-2	.103,-1	.954,-2	.866,-2
09	.845,-2	.519,-2	.756,-2	.927,-2	.843,-2
10	.769,-2	.482,-2	.499,-2	.862,-2	.554,-2
11	.682,-2	.661,-2	.525,-2	.674,-2	.504,-2
12	.560,-2	.819,-2	.405,-2	.466,-2	.589,-2
13	.514,-2	.648,-2	.617,-2	.467,-2	.649,-2
14	.485,-2	.705,-2	.846,-2	.593,-2	.611,-2
15	.466,-2	.633,-2	.703,-2	.593,-2	.485,-2
16	.530,-2	.453,-2	.594,-2	.510,-2	.327,-2
17	.447,-2	.415,-2	.624,-2	.437,-2	.329,-2
18	.437,-2	.327,-2	.515,-2	.409,-2	.410,-2
19	.539,-2	.443,-2	.493,-2	.446,-2	.425,-2
20	.520,-2	.557,-2	.498,-2	.549,-2	.376,-2
21	.499,-2	.465,-2	.426,-2	.501,-2	.385,-2
22	.539,-2	.410,-2	.411,-2	.516,-2	.454,-2
23	.541,-2	.292,-2	.364,-2	.262,-2	.414,-2
24	.421,-2	.306,-2	.372,-2	.329,-2	.450,-2
25	.361,-2	.353,-2	.483,-2	.316,-2	.505,-2
26	.429,-2	.268,-2	.415,-2	.229,-2	.419,-2
27	.415,-2	.282,-2	.289,-2	.202,-2	.360,-2
28	.473,-2	.283,-2	.347,-2	.364,-2	.464,-2
29	.532,-2	.322,-2	.400,-2	.468,-2	.446,-2
30	.457,-2	.372,-2	.426,-2	.449,-2	.334,-2
31	.387,-2	.300,-2	.387,-2	.330,-2	.277,-2
32	.386,-2	.317,-2	.305,-2	.275,-2	.259,-2
33	.365,-2	.358,-2	.267,-2	.288,-2	.322,-2
34	.355,-2	.351,-2	.279,-2	.265,-2	.365,-2
35	.312,-2	.401,-2	.248,-2	.276,-2	.301,-2
36	.334,-2	.353,-2	.339,-2	.258,-2	.362,-2
37	.434,-2	.205,-2	.418,-2	.233,-2	.425,-2
38	.539,-2	.169,-2	.347,-2	.249,-2	.345,-2
39	.458,-2	.275,-2	.273,-2	.210,-2	.320,-2
40	.304,-2	.310,-2	.284,-2	.183,-2	.328,-2
41	.343,-2	.253,-2	.353,-2	.221,-2	.322,-2
42	.375,-2	.264,-2	.368,-2	.320,-2	.349,-2
43	.393,-2	.355,-2	.295,-2	.334,-2	.381,-2
44	.402,-2	.205,-2	.258,-2	.312,-2	.349,-2
45	.358,-2	.231,-2	.217,-2	.278,-2	.337,-2
46	.320,-2	.241,-2	.178,-2	.214,-2	.397,-2
47	.337,-2	.256,-2	.170,-2	.226,-2	.452,-2
48	.344,-2	.305,-2	.168,-2	.245,-2	.456,-2
49	.402,-2	.313,-2	.184,-2	.237,-2	.397,-2
50	.378,-2	.241,-2	.220,-2	.195,-2	.431,-2
51	.401,-2	.162,-2	.271,-2	.233,-2	.325,-2
52	.435,-2	.166,-2	.246,-2	.277,-2	.238,-2
53	.384,-2	.205,-2	.189,-2	.293,-2	.222,-2
54	.281,-2	.225,-2	.139,-2	.280,-2	.260,-2
55	.321,-2	.282,-2	.146,-2	.254,-2	.318,-2
56	.310,-2	.318,-2	.175,-2	.326,-2	.329,-2
57	.257,-2	.300,-2	.230,-2	.378,-2	.374,-2
58	.269,-2	.250,-2	.320,-2	.306,-2	.300,-2
59	.251,-2	.258,-2	.305,-2	.206,-2	.190,-2
60	.185,-2	.214,-2	.220,-2	.142,-2	.157,-2

Run No. 46 V component

N	Anemometer Position Number				
	1	2	3	4	5
00	.151,-2	.211,-2	.156,-2	.199,-2	.197,-2
01	.220,-2	.466,-2	.444,-2	.194,-2	.245,-2
02	.390,-2	.256,-2	.471,-2	.213,-2	.291,-2
03	.401,-2	.277,-2	.347,-2	.257,-2	.301,-2
04	.456,-2	.234,-2	.257,-2	.287,-2	.251,-2
05	.177,-2	.219,-2	.215,-2	.304,-2	.185,-2
06	.213,-2	.206,-2	.368,-2	.357,-2	.277,-2
07	.158,-2	.270,-2	.450,-2	.269,-2	.328,-2
08	.345,-2	.222,-2	.415,-2	.209,-2	.252,-2
09	.190,-2	.251,-2	.312,-2	.262,-2	.261,-2
10	.256,-2	.368,-2	.281,-2	.226,-2	.274,-2
11	.314,-2	.319,-2	.251,-2	.296,-2	.180,-2
12	.207,-2	.226,-2	.159,-2	.252,-2	.160,-2
13	.190,-2	.176,-2	.114,-2	.166,-2	.251,-2
14	.147,-2	.184,-2	.214,-2	.189,-2	.251,-2
15	.218,-2	.195,-2	.251,-2	.145,-2	.250,-2
16	.179,-2	.195,-2	.204,-2	.227,-2	.277,-2
17	.221,-2	.247,-2	.194,-2	.357,-2	.240,-2
18	.221,-2	.201,-2	.171,-2	.316,-2	.247,-2
19	.252,-2	.205,-2	.176,-2	.241,-2	.207,-2
20	.175,-2	.174,-2	.241,-2	.254,-2	.160,-2
21	.257,-2	.217,-2	.269,-2	.257,-2	.194,-2
22	.223,-2	.235,-2	.250,-2	.183,-2	.257,-2
23	.355,-2	.257,-2	.221,-2	.183,-2	.196,-2
24	.215,-2	.208,-2	.215,-2	.210,-2	.195,-2
25	.197,-2	.214,-2	.224,-2	.191,-2	.259,-2
26	.169,-2	.208,-2	.231,-2	.162,-2	.249,-2
27	.217,-2	.141,-2	.202,-2	.190,-2	.225,-2
28	.240,-2	.141,-2	.241,-2	.225,-2	.170,-2
29	.215,-2	.219,-2	.204,-2	.208,-2	.192,-2
30	.156,-2	.245,-2	.184,-2	.206,-2	.140,-2
31	.195,-2	.197,-2	.235,-2	.179,-2	.165,-2
32	.247,-2	.221,-2	.220,-2	.225,-2	.185,-2
33	.242,-2	.226,-2	.175,-2	.253,-2	.210,-2
34	.255,-2	.173,-2	.197,-2	.218,-2	.210,-2
35	.217,-2	.214,-2	.176,-2	.189,-2	.206,-2
36	.197,-2	.197,-2	.196,-2	.207,-2	.181,-2
37	.225,-2	.140,-2	.184,-2	.218,-2	.170,-2
38	.241,-2	.151,-2	.190,-2	.211,-2	.140,-2
39	.198,-2	.111,-2	.154,-2	.195,-2	.151,-2
40	.191,-2	.151,-2	.145,-2	.179,-2	.176,-2
41	.141,-2	.172,-2	.169,-2	.179,-2	.201,-2
42	.214,-2	.221,-2	.194,-2	.155,-2	.183,-2
43	.241,-2	.218,-2	.208,-2	.191,-2	.150,-2
44	.224,-2	.210,-2	.205,-2	.191,-2	.159,-2
45	.210,-2	.208,-2	.230,-2	.207,-2	.159,-2
46	.243,-2	.228,-2	.247,-2	.214,-2	.186,-2
47	.250,-2	.199,-2	.217,-2	.201,-2	.198,-2
48	.199,-2	.201,-2	.245,-2	.155,-2	.227,-2
49	.162,-2	.179,-2	.232,-2	.150,-2	.213,-2
50	.134,-2	.182,-2	.196,-2	.143,-2	.172,-2
51	.174,-2	.215,-2	.204,-2	.263,-2	.155,-2
52	.219,-2	.253,-2	.211,-2	.309,-2	.163,-2
53	.205,-2	.226,-2	.210,-2	.253,-2	.242,-2
54	.162,-2	.218,-2	.183,-2	.201,-2	.244,-2
55	.156,-2	.207,-2	.147,-2	.199,-2	.192,-2
56	.190,-2	.250,-2	.186,-2	.160,-2	.235,-2
57	.180,-2	.266,-2	.158,-2	.127,-2	.283,-2
58	.250,-2	.278,-2	.177,-2	.176,-2	.215,-2
59	.213,-2	.205,-2	.152,-2	.148,-2	.137,-2
60	.122,-2	.157,-2	.116,-2	.944,-3	.110,-2

Run No. 55: u component

N	Anemometer Position Number 1	2	3	4	5
00	.107,-1	.547,-2	.952,-2	.114,-1	.806,-1
01	.960,-2	.234,-2	.459,-2	.652,-2	.969,-2
02	.177,-2	.844,-3	.124,-2	.261,-2	.165,-2
03	.176,-2	.876,-3	.115,-2	.207,-2	.145,-2
04	.120,-2	.705,-3	.127,-2	.170,-2	.147,-2
05	.137,-2	.644,-3	.759,-3	.190,-2	.169,-2
06	.160,-2	.800,-3	.459,-3	.196,-2	.140,-2
07	.103,-2	.691,-3	.618,-3	.124,-2	.142,-2
08	.182,-2	.469,-3	.849,-3	.794,-3	.134,-2
09	.108,-2	.455,-3	.118,-2	.924,-3	.140,-2
10	.152,-2	.540,-3	.108,-2	.144,-2	.126,-2
11	.169,-2	.651,-3	.101,-2	.162,-2	.105,-2
12	.135,-2	.664,-3	.109,-2	.171,-2	.108,-2
13	.885,-3	.455,-3	.100,-2	.144,-2	.974,-3
14	.100,-2	.269,-3	.141,-2	.980,-3	.104,-2
15	.850,-3	.907,-3	.125,-2	.767,-3	.127,-2
16	.647,-3	.495,-3	.890,-3	.800,-3	.988,-3
17	.957,-3	.405,-3	.627,-3	.880,-3	.606,-3
18	.115,-2	.495,-3	.849,-3	.795,-3	.477,-3
19	.109,-2	.476,-3	.901,-3	.840,-3	.472,-3
20	.918,-3	.381,-3	.696,-3	.807,-3	.497,-3
21	.768,-3	.298,-3	.646,-3	.969,-3	.678,-3
22	.750,-3	.376,-3	.785,-3	.610,-3	.793,-3
23	.711,-3	.337,-3	.782,-3	.750,-3	.641,-3
24	.697,-3	.274,-3	.644,-3	.956,-3	.471,-3
25	.740,-3	.191,-3	.627,-3	.150,-2	.355,-3
26	.599,-3	.142,-3	.466,-3	.106,-2	.666,-3
27	.688,-3	.177,-3	.408,-3	.693,-3	.844,-3
28	.401,-3	.225,-3	.497,-3	.618,-3	.801,-3
29	.434,-3	.240,-3	.508,-3	.697,-3	.954,-3
30	.708,-3	.184,-3	.475,-3	.574,-3	.868,-3
31	.614,-3	.140,-3	.468,-3	.524,-3	.655,-3
32	.516,-3	.140,-3	.506,-3	.684,-3	.582,-3
33	.554,-3	.110,-3	.570,-3	.584,-3	.550,-3
34	.448,-3	.163,-3	.495,-3	.571,-3	.586,-3
35	.597,-3	.184,-3	.505,-3	.546,-3	.520,-3
36	.490,-3	.230,-3	.429,-3	.548,-3	.550,-3
37	.652,-3	.217,-3	.678,-3	.641,-3	.645,-3
38	.486,-3	.288,-3	.579,-3	.595,-3	.495,-3
39	.434,-3	.252,-3	.577,-3	.467,-3	.449,-3
40	.498,-3	.108,-3	.561,-3	.415,-3	.398,-3
41	.446,-3	.155,-3	.512,-3	.548,-3	.568,-3
42	.398,-3	.113,-3	.577,-3	.186,-	.562,-3
43	.579,-3	.101,-3	.574,-3	.389,-3	.518,-3
44	.455,-3	.106,-3	.532,-3	.975,-3	.552,-3
45	.551,-3	.144,-3	.857,-3	.897,-3	.609,-3
46	.508,-3	.155,-3	.804,-3	.646,-3	.696,-3
47	.547,-3	.105,-3	.846,-3	.542,-3	.611,-3
48	.505,-3	.172,-3	.847,-3	.671,-3	.575,-3
49	.495,-3	.144,-3	.812,-3	.677,-3	.545,-3
50	.476,-3	.127,-3	.877,-3	.642,-3	.611,-3
51	.523,-3	.111,-3	.817,-3	.619,-3	.656,-3
52	.606,-3	.918,-4	.825,-3	.599,-3	.570,-3
53	.461,-3	.105,-3	.854,-3	.603,-3	.569,-3
54	.523,-3	.118,-3	.813,-3	.596,-3	.633,-3
55	.847,-3	.109,-3	.802,-3	.608,-3	.631,-3
56	.575,-3	.129,-3	.867,-3	.891,-3	.627,-3
57	.575,-3	.140,-3	.834,-3	.851,-3	.539,-3
58	.590,-3	.122,-3	.820,-3	.856,-3	.585,-3
59	.523,-3	.113,-3	.145,-3	.274,-3	.540,-3
60	.242,-3	.913,-4	.112,-3	.228,-3	.259,-3

Run No. 53; v component

N	Anemometer Position Number 1	2	3	4	5
00	.484,-2	.244,-2	.457,-2	.624,-2	.296,-2
01	.264,-2	.128,-2	.233,-2	.293,-2	.155,-2
02	.675,-3	.378,-3	.548,-3	.408,-3	.374,-3
03	.528,-3	.371,-3	.455,-3	.346,-3	.266,-3
04	.423,-3	.223,-3	.312,-3	.225,-3	.233,-3
05	.335,-3	.143,-3	.309,-3	.231,-3	.227,-3
06	.302,-3	.141,-3	.325,-3	.319,-3	.299,-3
07	.295,-3	.140,-3	.278,-3	.299,-3	.229,-3
08	.381,-3	.125,-3	.321,-3	.266,-3	.190,-3
09	.402,-3	.132,-3	.296,-3	.279,-3	.259,-3
10	.311,-3	.832,-4	.192,-3	.221,-3	.220,-3
11	.377,-3	.725,-4	.281,-3	.167,-3	.244,-3
12	.387,-3	.120,-3	.333,-3	.242,-3	.320,-3
13	.287,-3	.162,-3	.328,-3	.280,-3	.267,-3
14	.333,-3	.172,-3	.245,-3	.322,-3	.174,-3
15	.414,-3	.222,-3	.196,-3	.276,-3	.226,-3
16	.352,-3	.214,-3	.233,-3	.202,-3	.312,-3
17	.310,-3	.176,-3	.239,-3	.216,-3	.435,-3
18	.304,-3	.178,-3	.253,-3	.415,-3	.418,-3
19	.320,-3	.184,-3	.328,-3	.402,-3	.254,-3
20	.430,-3	.174,-3	.285,-3	.282,-3	.227,-3
21	.539,-3	.169,-3	.240,-3	.389,-3	.278,-3
22	.606,-3	.126,-3	.252,-3	.395,-3	.404,-3
23	.457,-3	.990,-4	.252,-3	.311,-3	.453,-3
24	.409,-3	.161,-3	.220,-3	.326,-3	.385,-3
25	.424,-3	.178,-3	.183,-3	.332,-3	.439,-3
26	.278,-3	.117,-3	.195,-3	.301,-3	.425,-3
27	.231,-3	.129,-3	.209,-3	.239,-3	.251,-3
28	.236,-3	.116,-3	.220,-3	.164,-3	.269,-3
29	.210,-3	.902,-4	.259,-3	.177,-3	.345,-3
30	.206,-3	.101,-3	.268,-3	.205,-3	.311,-3
31	.218,-3	.103,-3	.228,-3	.256,-3	.336,-3
32	.256,-3	.918,-4	.216,-3	.267,-3	.275,-3
33	.202,-3	.663,-4	.215,-3	.276,-3	.250,-3
34	.236,-3	.594,-4	.247,-3	.205,-3	.279,-3
35	.285,-3	.644,-4	.249,-3	.149,-3	.247,-3
36	.297,-3	.817,-4	.201,-3	.123,-3	.285,-3
37	.229,-3	.622,-4	.170,-3	.204,-3	.274,-3
38	.201,-3	.562,-4	.178,-3	.228,-3	.228,-3
39	.234,-3	.457,-4	.158,-3	.205,-3	.242,-3
40	.245,-3	.619,-4	.163,-3	.199,-3	.265,-3
41	.280,-3	.723,-4	.185,-3	.177,-3	.227,-3
42	.253,-3	.115,-3	.214,-3	.148,-3	.247,-3
43	.216,-3	.138,-3	.229,-3	.169,-3	.235,-3
44	.235,-3	.148,-3	.214,-3	.172,-3	.229,-3
45	.283,-3	.152,-3	.214,-3	.169,-3	.218,-3
46	.220,-3	.117,-3	.231,-3	.183,-3	.167,-3
47	.199,-3	.104,-3	.195,-3	.180,-3	.158,-3
48	.173,-3	.761,-4	.159,-3	.161,-3	.194,-3
49	.260,-3	.923,-4	.162,-3	.142,-3	.252,-3
50	.342,-3	.114,-3	.208,-3	.156,-3	.233,-3
51	.391,-3	.118,-3	.227,-3	.135,-3	.206,-3
52	.364,-3	.118,-3	.166,-3	.115,-3	.163,-3
53	.253,-3	.951,-4	.156,-3	.141,-3	.156,-3
54	.187,-3	.702,-4	.164,-3	.111,-3	.183,-3
55	.209,-3	.757,-4	.172,-3	.113,-3	.180,-3
56	.185,-3	.828,-4	.189,-3	.155,-3	.204,-3
57	.178,-3	.883,-4	.166,-3	.112,-3	.209,-3
58	.183,-3	.124,-3	.134,-3	.944,-4	.203,-3
59	.148,-3	.135,-3	.108,-3	.821,-4	.244,-3
60	.123,-3	.114,-3	.867,-4	.667,-4	.235,-3

Run No. 53; w component

N	Anemometer Position Number 1	2	3	4	5
00	.837,-4	.282,-3	.562,-4	.238,-3	.173,-3
01	.112,-3	.220,-3	.680,-4	.194,-3	.177,-3
02	.177,-3	.147,-3	.744,-4	.164,-3	.157,-3
03	.178,-3	.984,-4	.634,-4	.112,-3	.139,-3
04	.140,-3	.926,-4	.754,-4	.102,-3	.192,-3
05	.177,-3	.793,-4	.683,-4	.102,-3	.224,-3
06	.139,-3	.684,-4	.471,-4	.815,-4	.156,-3
07	.205,-3	.781,-4	.143,-4	.636,-4	.108,-3
08	.137,-3	.126,-3	.535,-4	.838,-4	.114,-3
09	.149,-3	.129,-3	.561,-4	.131,-3	.146,-3
10	.188,-3	.840,-4	.521,-4	.140,-3	.124,-3
11	.169,-3	.819,-4	.817,-4	.121,-3	.126,-3
12	.147,-3	.131,-3	.857,-4	.105,-3	.178,-3
13	.153,-3	.140,-3	.625,-4	.990,-4	.185,-3
14	.168,-3	.160,-3	.104,-3	.907,-4	.161,-3
15	.171,-3	.163,-3	.136,-3	.884,-4	.117,-3
16	.169,-3	.103,-3	.100,-3	.991,-4	.938,-4
17	.133,-3	.107,-3	.849,-4	.115,-3	.125,-3
18	.125,-3	.114,-3	.114,-3	.196,-3	.140,-3
19	.154,-3	.862,-4	.127,-3	.184,-3	.121,-3
20	.168,-3	.648,-4	.107,-3	.114,-3	.144,-3
21	.146,-3	.866,-4	.151,-3	.987,-4	.129,-3
22	.161,-3	.868,-4	.128,-3	.969,-4	.991,-4
23	.220,-3	.830,-4	.118,-3	.815,-4	.969,-4
24	.187,-3	.800,-4	.110,-3	.807,-4	.113,-3
25	.153,-3	.849,-4	.628,-4	.133,-3	.951,-4
26	.160,-3	.966,-4	.561,-4	.186,-3	.119,-3
27	.179,-3	.110,-3	.543,-4	.162,-3	.173,-3
28	.162,-3	.115,-3	.616,-4	.132,-3	.157,-3
29	.136,-3	.102,-3	.690,-4	.118,-3	.139,-3
30	.135,-3	.616,-4	.817,-4	.716,-4	.138,-3
31	.181,-3	.621,-4	.788,-4	.607,-4	.198,-3
32	.193,-3	.892,-4	.612,-4	.100,-3	.116,-3
33	.182,-3	.796,-4	.577,-4	.147,-3	.979,-4
34	.184,-3	.944,-4	.624,-4	.156,-3	.116,-3
35	.227,-3	.122,-3	.874,-4	.114,-3	.131,-3
36	.201,-3	.115,-3	.891,-4	.102,-3	.147,-3
37	.127,-3	.851,-4	.678,-4	.125,-3	.162,-3
38	.105,-3	.106,-3	.665,-4	.123,-3	.202,-3
39	.122,-3	.126,-3	.721,-4	.106,-3	.163,-3
40	.164,-3	.107,-3	.676,-4	.131,-3	.124,-3
41	.152,-3	.115,-3	.593,-4	.162,-3	.148,-3
42	.150,-3	.119,-3	.688,-4	.116,-3	.164,-3
43	.182,-3	.951,-4	.666,-4	.699,-4	.160,-3
44	.193,-3	.831,-4	.583,-4	.961,-4	.165,-3
45	.161,-3	.113,-3	.688,-4	.124,-3	.181,-3
46	.120,-3	.890,-4	.755,-4	.979,-4	.170,-3
47	.165,-3	.671,-4	.600,-4	.834,-4	.122,-3
48	.216,-3	.932,-4	.430,-4	.663,-4	.920,-4
49	.228,-3	.112,-3	.376,-4	.637,-4	.980,-4
50	.218,-3	.128,-3	.462,-4	.638,-4	.109,-3
51	.184,-3	.120,-3	.493,-4	.937,-4	.127,-3
52	.215,-3	.872,-4	.590,-4	.101,-3	.119,-3
53	.161,-3	.104,-3	.822,-4	.793,-4	.127,-3
54	.952,-4	.115,-3	.698,-4	.660,-4	.152,-3
55	.121,-3	.912,-4	.572,-4	.554,-4	.154,-3
56	.146,-3	.955,-4	.556,-4	.497,-4	.150,-3
57	.105,-3	.118,-3	.495,-4	.577,-4	.111,-3
58	.116,-3	.967,-4	.437,-4	.756,-4	.121,-3
59	.102,-3	.811,-4	.328,-4	.702,-4	.131,-3
60	.843,-4	.883,-4	.280,-4	.585,-4	.112,-3

Run No. 54; u component

N	Anemometer Position Number 1	2	3	4	5
00	.548,-1	.366,-1	.456,-1	.355,-1	.324,-1
01	.460,-1	.303,-1	.439,-1	.656,-1	.293,-1
02	.365,-1	.266,-1	.328,-1	.505,-1	.285,-1
03	.257,-1	.229,-1	.207,-1	.324,-1	.305,-1
04	.165,-1	.186,-1	.169,-1	.287,-1	.212,-1
05	.154,-1	.147,-1	.135,-1	.257,-1	.124,-1
06	.198,-1	.125,-1	.113,-1	.207,-1	.104,-1
07	.180,-1	.935,-2	.107,-1	.138,-1	.937,-2
08	.172,-1	.793,-2	.111,-1	.107,-1	.747,-2
09	.209,-1	.824,-2	.108,-1	.875,-2	.669,-2
10	.164,-1	.661,-2	.804,-2	.865,-2	.695,-2
11	.992,-2	.498,-2	.562,-2	.114,-1	.762,-2
12	.586,-2	.476,-2	.587,-2	.128,-1	.831,-2
13	.505,-2	.488,-2	.684,-2	.114,-1	.666,-2
14	.640,-2	.413,-2	.623,-2	.810,-2	.634,-2
15	.614,-2	.406,-2	.563,-2	.674,-2	.518,-2
16	.667,-2	.364,-2	.649,-2	.765,-2	.395,-2
17	.748,-2	.340,-2	.587,-2	.655,-2	.429,-2
18	.536,-2	.323,-2	.348,-2	.463,-2	.426,-2
19	.567,-2	.314,-2	.296,-2	.504,-2	.462,-2
20	.608,-2	.375,-2	.343,-2	.663,-2	.513,-2
21	.500,-2	.481,-2	.285,-2	.569,-2	.429,-2
22	.497,-2	.516,-2	.208,-2	.508,-2	.384,-2
23	.511,-2	.408,-2	.229,-2	.556,-2	.342,-2
24	.471,-2	.349,-2	.227,-2	.482,-2	.310,-2
25	.356,-2	.331,-2	.214,-2	.344,-2	.240,-2
26	.270,-2	.311,-2	.163,-2	.356,-2	.179,-2
27	.321,-2	.279,-2	.171,-2	.327,-2	.188,-2
28	.336,-2	.235,-2	.227,-2	.205,-2	.147,-2
29	.309,-2	.195,-2	.257,-2	.205,-2	.151,-2
30	.385,-2	.204,-2	.263,-2	.352,-2	.153,-2
31	.359,-2	.250,-2	.298,-2	.325,-2	.127,-2
32	.296,-2	.215,-2	.359,-2	.954,-2	.129,-2
33	.329,-2	.148,-2	.328,-2	.279,-2	.189,-2
34	.344,-2	.144,-2	.238,-2	.276,-2	.189,-2
35	.282,-2	.212,-2	.188,-2	.250,-2	.197,-2
36	.273,-2	.259,-2	.181,-2	.279,-2	.241,-2
37	.326,-2	.267,-2	.190,-2	.260,-2	.169,-2
38	.280,-2	.251,-2	.174,-2	.243,-2	.132,-2
39	.212,-2	.243,-2	.144,-2	.255,-2	.145,-2
40	.221,-2	.178,-2	.129,-2	.263,-2	.162,-2
41	.247,-2	.152,-2	.171,-2	.193,-2	.150,-2
42	.247,-2	.197,-2	.152,-2	.199,-2	.119,-2
43	.204,-2	.276,-2	.103,-2	.222,-2	.121,-2
44	.175,-2	.312,-2	.103,-2	.191,-2	.141,-2
45	.162,-2	.252,-2	.938,-3	.143,-2	.136,-2
46	.158,-2	.254,-2	.978,-3	.157,-2	.980,-3
47	.142,-2	.203,-2	.104,-2	.185,-2	.958,-3
48	.137,-2	.168,-2	.108,-2	.150,-2	.976,-3
49	.135,-2	.193,-2	.106,-2	.138,-2	.103,-2
50	.131,-2	.185,-2	.107,-2	.165,-2	.124,-2
51	.141,-2	.175,-2	.894,-3	.160,-2	.991,-3
52	.172,-2	.198,-2	.840,-3	.208,-2	.100,-2
53	.198,-2	.248,-2	.105,-2	.206,-2	.138,-2
54	.187,-2	.228,-2	.116,-2	.178,-2	.179,-2
55	.214,-2	.218,-2	.135,-2	.183,-2	.161,-2
56	.222,-2	.222,-2	.126,-2	.175,-2	.125,-2
57	.180,-2	.191,-2	.130,-2	.147,-2	.128,-2
58	.218,-2	.211,-2	.134,-2	.137,-2	.108,-2
59	.180,-2	.209,-2	.111,-2	.118,-2	.738,-3
60	.128,-2	.179,-2	.892,-3	.993,-3	.617,-3

Run No. 541 v component

N	Accelerometer Position Number 1	2	3	4	5
00	.189,-1	.1[illegible],-2	.[illegible]47,-2	.107,-1	.617,-2
01	.[illegible]43,-2	.[illegible]12,-2	.[illegible]65[illegible],-2	.715,-2	.[illegible]38,-2
02	.[illegible]23,-2	.417,-2	.[illegible]11,-2	.516,-2	.240,-2
03	.499,-2	.419,-2	.620,-2	.705,-2	.317,-2
04	.521,-2	.[illegible]67,-2	.[illegible]09,-2	.710,-2	.[illegible]47,-2
05	.551,-2	.[illegible]99,-2	.[illegible]41,-2	.[illegible]65,-2	.[illegible]45,-2
06	.[illegible]89,-2	.[illegible]84,-2	.[illegible]78,-2	.[illegible]89,-2	.[illegible]57,-2
07	.522,-2	.[illegible]64,-2	.[illegible]66,-2	.[illegible]13,-2	.[illegible]47,-2
08	.454,-2	.[illegible]33,-2	.[illegible]70,-2	.[illegible]64,-2	.[illegible]75,-2
09	.[illegible]20,-2	.[illegible]48,-2	.[illegible]09,-2	.[illegible]91,-2	.[illegible]08,-2
10	.[illegible]90,-2	.[illegible]10,-2	.[illegible]20,-2	.[illegible]65,-2	.[illegible]26,-2
11	.[illegible]12,-2	.[illegible]47,-2	.[illegible]40,-2	.[illegible]27,-2	.[illegible]27,-2
12	.[illegible]06,-2	.[illegible]30,-2	.[illegible]07,-2	.[illegible]85,-2	.[illegible]03,-2
13	.[illegible]61,-2	.[illegible]72,-2	.[illegible]54,-2	.[illegible]13,-2	.[illegible]90,-2
14	.[illegible]20,-2	.[illegible]10,-2	.[illegible]04,-2	.[illegible]49,-2	.[illegible]94,-2
15	.[illegible]91,-2	.[illegible]06,-2	.[illegible]77,-2	.[illegible]99,-2	.[illegible]05,-2
16	.[illegible]46,-2	.[illegible]52,-2	.[illegible]30,-2	.[illegible]92,-2	.[illegible]30,-2
17	.[illegible]04,-2	.[illegible]05,-2	.[illegible]01,-2	.[illegible]91,-2	.[illegible]92,-2
18	.[illegible]52,-2	.[illegible]44,-2	.[illegible]91,-2	.[illegible]04,-2	.[illegible]47,-2
19	.[illegible]55,-2	.[illegible]97,-2	.[illegible]21,-2	.[illegible]91,-2	.[illegible]49,-2
20	.[illegible]95,-2	.[illegible]92,-2	.[illegible]91,-2	.[illegible]27,-2	.[illegible]56,-2
21	.[illegible]79,-2	.[illegible]90,-2	.[illegible]05,-2	.[illegible]27,-2	.[illegible]91,-2
22	.[illegible]08,-2	.[illegible]92,-2	.[illegible]14,-2	.[illegible]45,-2	.[illegible]75,-2
23	.[illegible]74,-2	.[illegible]71,-2	.[illegible]96,-2	.[illegible]92,-2	.[illegible]15,-2
24	.[illegible]66,-2	.[illegible]90,-2	.[illegible]92,-2	.[illegible]17,-2	.[illegible]75,-2
25	.[illegible]64,-2	.[illegible]71,-2	.[illegible]81,-2	.[illegible]44,-2	.[illegible]96,-2
26	.[illegible]20,-2	.[illegible]19,-2	.[illegible]01,-2	.[illegible]99,-2	.[illegible]91,-2
27	.[illegible]02,-2	.[illegible]70,-2	.[illegible]92,-2	.[illegible]54,-2	.[illegible]67,-2
28	.[illegible]40,-2	.[illegible]66,-2	.[illegible]54,-2	.[illegible]20,-2	.[illegible]40,-2
29	.[illegible]78,-2	.[illegible]01,-2	.[illegible]10,-2	.[illegible]67,-2	.[illegible]15,-2
30	.[illegible]99,-2	.[illegible]57,-2	.[illegible]19,-2	.[illegible]30,-2	.[illegible]75,-2
31	.[illegible]61,-2	.[illegible]40,-2	.[illegible]18,-2	.[illegible]76,-2	.[illegible]07,-2
32	.[illegible]95,-2	.[illegible]45,-2	.[illegible]20,-2	.[illegible]66,-2	.[illegible]65,-2
33	.[illegible]77,-2	.[illegible]74,-2	.[illegible]08,-2	.[illegible]61,-2	.[illegible]61,-2
34	.[illegible]05,-2	.[illegible]11,-2	.[illegible]71,-2	.[illegible]84,-2	.[illegible]50,-2
35	.[illegible]82,-2	.[illegible]41,-2	.[illegible]77,-2	.[illegible]51,-2	.[illegible]41,-2
36	.[illegible]39,-2	.[illegible]16,-2	.[illegible]27,-2	.[illegible]97,-2	.[illegible]61,-2
37	.[illegible]09,-2	.[illegible]61,-2	.[illegible]47,-2	.[illegible]90,-2	.[illegible]76,-2
38	.[illegible]44,-2	.[illegible]64,-2	.[illegible]14,-2	.[illegible]60,-2	.[illegible]55,-2
39	.[illegible]67,-2	.[illegible]28,-2	.[illegible]20,-2	.[illegible]63,-2	.[illegible]65,-2
40	.[illegible]58,-2	.[illegible]69,-2	.[illegible]17,-2	.[illegible]69,-2	.[illegible]05,-2
41	.[illegible]08,-2	.[illegible]28,-2	.[illegible]45,-2	.[illegible]44,-2	.[illegible]38,-2
42	.[illegible]23,-2	.[illegible]23,-2	.[illegible]17,-2	.[illegible]48,-2	.[illegible]75,-2
43	.[illegible]70,-2	.[illegible]19,-2	.[illegible]16,-2	.[illegible]08,-2	.[illegible]45,-2
44	.[illegible]01,-2	.[illegible]19,-2	.[illegible]15,-2	.[illegible]25,-2	.[illegible]92,-2
45	.271,-2	.[illegible]55,-2	.[illegible]19,-2	.[illegible]56,-2	.[illegible]56,-2
46	.[illegible]01,-2	.[illegible]18,-2	.[illegible]51,-2	.[illegible]56,-2	.[illegible]10,-2
47	.[illegible]56,-2	.[illegible]59,-3	.[illegible]50,-2	.[illegible]92,-2	.[illegible]84,-2
48	.[illegible]00,-2	.[illegible]17,-2	.[illegible]14,-2	.[illegible]15,-2	.121,-2
49	.221,-2	.[illegible]25,-2	.[illegible]20,-2	.[illegible]12,-2	.[illegible]55,-2
50	.[illegible]04,-2	.[illegible]58,-2	.[illegible]42,-2	.[illegible]12,-2	.[illegible]41,-2
51	.[illegible]68,-2	.[illegible]24,-2	.[illegible]41,-2	.[illegible]27,-2	.[illegible]63,-2
52	.[illegible]09,-2	.[illegible]30,-2	.[illegible]34,-2	.[illegible]14,-2	.[illegible]41,-2
53	.[illegible]95,-2	.[illegible]62,-2	.[illegible]15,-2	.[illegible]24,-2	.[illegible]44,-2
54	.[illegible]98,-2	.[illegible]20,-2	.[illegible]06,-3	.[illegible]45,-2	.[illegible]41,-2
55	.[illegible]06,-2	.[illegible]19,-2	.[illegible]97,-3	.[illegible]17,-2	.[illegible]09,-2
56	.[illegible]15,-2	.[illegible]09,-2	.[illegible]25,-2	.[illegible]22,-2	.967,-3
57	.[illegible]81,-2	.[illegible]54,-3	.[illegible]60,-2	.[illegible]20,-2	.[illegible]09,-2
58	.169,-2	.[illegible]72,-3	.[illegible]18,-2	.[illegible]70,-3	.[illegible]11,-2
59	.[illegible]49,-2	.[illegible]92,-3	.[illegible]10,-2	.[illegible]23,-2	.991,-3
60	.120,-2	.[illegible]84,-3	.[illegible]08,-2	.[illegible]55,-2	.[illegible]04,-3

Run No. 54; w component

	Anemometer Position Number				
N	1	2	3	4	5
00	.147,-2	.959,-3	.155,-2	.131,-2	.100,-2
01	.205,-2	.128,-2	.185,-2	.171,-2	.109,-2
02	.248,-2	.146,-2	.182,-2	.190,-2	.116,-2
03	.222,-2	.131,-2	.143,-2	.176,-2	.142,-2
04	.245,-2	.143,-2	.152,-2	.140,-2	.125,-2
05	.234,-2	.139,-2	.149,-2	.124,-2	.113,-2
06	.251,-2	.111,-2	.153,-2	.130,-2	.108,-2
07	.243,-2	.114,-2	.146,-2	.145,-2	.933,-3
08	.224,-2	.109,-2	.120,-2	.167,-2	.797,-3
09	.274,-2	.987,-3	.134,-2	.144,-2	.845,-3
10	.206,-2	.120,-2	.132,-2	.133,-2	.999,-3
11	.246,-2	.137,-2	.110,-2	.140,-2	.931,-3
12	.221,-2	.143,-2	.902,-3	.112,-2	.876,-3
13	.105,-2	.167,-2	.112,-2	.118,-2	.735,-3
14	.125,-2	.162,-2	.108,-2	.107,-2	.613,-3
15	.228,-2	.143,-2	.807,-3	.119,-2	.771,-3
16	.254,-2	.139,-2	.901,-3	.156,-2	.718,-3
17	.255,-2	.132,-2	.141,-2	.161,-2	.632,-3
18	.234,-2	.119,-2	.161,-2	.135,-2	.723,-3
19	.201,-2	.105,-2	.142,-2	.956,-3	.856,-3
20	.205,-2	.825,-3	.102,-2	.111,-2	.908,-3
21	.187,-2	.765,-3	.751,-3	.130,-2	.775,-3
22	.198,-2	.929,-3	.677,-3	.117,-2	.658,-3
23	.180,-2	.120,-2	.841,-3	.122,-2	.745,-3
24	.175,-2	.113,-2	.971,-3	.124,-2	.685,-3
25	.233,-2	.109,-2	.989,-3	.125,-2	.639,-3
26	.244,-2	.123,-2	.919,-3	.127,-2	.725,-3
27	.267,-2	.116,-2	.904,-3	.144,-2	.968,-3
28	.301,-2	.958,-3	.104,-2	.165,-2	.874,-3
29	.200,-2	.113,-2	.147,-2	.141,-2	.712,-3
30	.186,-2	.150,-2	.148,-2	.129,-2	.757,-3
31	.202,-2	.166,-2	.138,-2	.136,-2	.116,-2
32	.227,-2	.158,-2	.165,-2	.115,-2	.112,-2
33	.17[illegible],-2	.134,-2	.174,-2	.807,-3	.869,-3
34	.135,-2	.113,-2	.136,-2	.868,-3	.893,-3
35	.139,-2	.126,-2	.969,-3	.975,-3	.758,-3
36	.186,-2	.124,-2	.105,-2	.112,-2	.767,-3
37	.204,-2	.112,-2	.105,-2	.131,-2	.945,-3
38	.200,-2	.111,-2	.861,-3	.134,-2	.777,-3
39	.243,-2	.100,-2	.858,-3	.121,-2	.611,-3
40	.239,-2	.877,-3	.915,-3	.108,-2	.795,-3
41	.186,-2	.676,-3	.889,-3	.926,-3	.978,-3
42	.156,-2	.901,-3	.780,-3	.919,-3	.751,-3
43	.148,-2	.107,-2	.799,-3	.124,-2	.568,-3
44	.19[illegible],-2	.951,-3	.985,-3	.130,-2	.692,-3
45	.2[illegible]5,-2	.113,-2	.876,-3	.140,-2	.656,-3
46	.21[illegible],-2	.131,-2	.674,-3	.142,-2	.530,-3
47	.20[illegible],-2	.129,-2	.976,-3	.133,-2	.462,-3
48	.23[illegible],-2	.143,-2	.105,-2	.132,-2	.678,-3
49	.19[illegible],-2	.141,-2	.940,-3	.118,-2	.724,-3
50	.136,-2	.118,-2	.101,-2	.926,-3	.721,-3
51	.156,-2	.115,-2	.107,-2	.859,-3	.712,-3
52	.20[illegible],-2	.112,-2	.973,-3	.742,-3	.711,-3
53	.22[illegible],-2	.105,-2	.125,-2	.824,-3	.683,-3
54	.30[illegible],-2	.129,-2	.144,-2	.913,-3	.685,-3
55	.272,-2	.164,-2	.144,-2	.797,-3	.829,-3
56	.178,-2	.112,-2	.150,-2	.917,-3	.743,-3
57	.180,-2	.819,-3	.129,-2	.110,-2	.550,-3
58	.179,-2	.112,-2	.128,-2	.127,-2	.556,-3
59	.135,-2	.114,-2	.106,-2	.118,-2	.550,-3
60	.112,-2	.779,-3	.888,-3	.955,-3	.439,-3

Run No. 55; u component

N	Anemometer Position Number 1	2	3	4	5
00	.656,-1	.121	.244	.105	.186
01	.764,-1	.147	.168	.137	.190
02	.646,-1	.125	.884,-1	.190	.158
03	.433,-1	.817,-1	.642,-1	.147	.112
04	.344,-1	.506,-1	.442,-1	.102	.931,-1
05	.280,-1	.310,-1	.293,-1	.937,-1	.937,-1
06	.231,-1	.252,-1	.256,-1	.771,-1	.880,-1
07	.150,-1	.226,-1	.288,-1	.585,-1	.791,-1
08	.139,-1	.283,-1	.226,-1	.292,-1	.634,-1
09	.150,-1	.288,-1	.168,-1	.262,-1	.339,-1
10	.134,-1	.214,-1	.128,-1	.293,-1	.243,-1
11	.125,-1	.199,-1	.795,-2	.253,-1	.235,-1
12	.111,-1	.206,-1	.792,-2	.244,-1	.255,-1
13	.104,-1	.140,-1	.122,-1	.245,-1	.267,-1
14	.851,-2	.121,-1	.109,-1	.185,-1	.255,-1
15	.620,-2	.157,-1	.933,-2	.145,-1	.234,-1
16	.725,-2	.176,-1	.102,-1	.151,-1	.214,-1
17	.762,-2	.152,-1	.937,-2	.151,-1	.174,-1
18	.595,-2	.110,-1	.872,-2	.150,-1	.131,-1
19	.443,-2	.862,-2	.751,-2	.187,-1	.107,-1
20	.381,-2	.825,-2	.761,-2	.169,-1	.106,-1
21	.436,-2	.767,-2	.746,-2	.128,-1	.160,-1
22	.455,-2	.794,-2	.704,-2	.112,-1	.207,-1
23	.516,-2	.875,-2	.529,-2	.110,-1	.149,-1
24	.518,-2	.712,-2	.405,-2	.120,-1	.106,-1
25	.435,-2	.544,-2	.520,-2	.983,-2	.160,-1
26	.394,-2	.710,-2	.704,-2	.788,-2	.187,-1
27	.357,-2	.787,-2	.577,-2	.629,-2	.135,-1
28	.289,-2	.582,-2	.478,-2	.751,-2	.124,-1
29	.294,-2	.666,-2	.534,-2	.102,-1	.157,-1
30	.388,-2	.901,-2	.531,-2	.937,-2	.164,-1
31	.382,-2	.792,-2	.402,-2	.892,-2	.124,-1
32	.258,-2	.598,-2	.391,-2	.114,-1	.105,-1
33	.372,-2	.511,-2	.428,-2	.947,-2	.928,-2
34	.395,-2	.528,-2	.427,-2	.494,-2	.765,-2
35	.318,-2	.434,-2	.444,-2	.501,-2	.893,-2
36	.305,-2	.448,-2	.396,-2	.867,-2	.100,-1
37	.277,-2	.487,-2	.336,-2	.848,-2	.951,-2
38	.308,-2	.473,-2	.275,-2	.550,-2	.104,-1
39	.321,-2	.487,-2	.256,-2	.539,-2	.115,-1
40	.271,-2	.442,-2	.246,-2	.889,-2	.111,-1
41	.256,-2	.325,-2	.277,-2	.934,-2	.866,-2
42	.244,-2	.285,-2	.294,-2	.684,-2	.669,-2
43	.161,-2	.332,-2	.298,-2	.589,-2	.759,-2
44	.145,-2	.360,-2	.365,-2	.517,-2	.644,-2
45	.188,-2	.365,-2	.294,-2	.493,-2	.647,-2
46	.219,-2	.298,-2	.257,-2	.518,-2	.781,-2
47	.175,-2	.281,-2	.181,-2	.527,-2	.727,-2
48	.125,-2	.366,-2	.143,-2	.426,-2	.715,-2
49	127,-2	.370,-2	.171,-2	.472,-2	.610,-2
50	.187,-2	.351,-2	.150,-2	.523,-2	.507,-2
51	.172,-2	.348,-2	.132,-2	.397,-2	.608,-2
52	.168,-2	.352,-2	.157,-2	.448,-2	.721,-2
53	.202,-2	.322,-2	.166,-2	.482,-2	.711,-2
54	.226,-2	.228,-2	.199,-2	.435,-2	.785,-2
55	.246,-2	.249,-2	.248,-2	.442,-2	.925,-2
56	.236,-2	.262,-2	.273,-2	.409,-2	.799,-2
57	.184,-2	.296,-2	.273,-2	.377,-2	.675,-2
58	.163,-2	.413,-2	.223,-2	.486,-2	.544,-2
59	.166,-2	.301,-2	.168,-2	.594,-2	.394,-2
60	.142,-2	.304,-2	.153,-2	.500,-2	.320,-2

Run No. 5;; v component

N	Anemometer Position Number 1	2	3	4	5
00	.143,-1	.147,-1	.155,-1	.[illegible],-1	.46[illegible],-1
01	.132,-1	.146,-1	.127,-1	.27[illegible],-1	.457,-1
02	.120,-1	.152,-1	.120,-1	.235,-1	.441,-1
03	.127,-1	.159,-1	.126,-1	.264,-1	.264,-1
04	.121,-1	.141,-1	.116,-1	.164,-1	.281,-1
05	.86[illegible],-2	.126,-1	.108,-1	.116,-1	.537,-1
06	.912,-2	.120,-1	.999,-2	.156,-1	.195,-1
07	.813,-2	.890,-2	.669,-2	.154,-1	.344,-1
08	.579,-2	.810,-2	.544,-2	.104,-1	.204,-1
09	.536,-2	.105,-1	.616,-2	.966,-2	.304,-1
10	.537,-2	.870,-2	.547,-2	.105,-1	.279,-1
11	.500,-2	.658,-2	.487,-2	.960,-2	.205,-1
12	.543,-2	.689,-2	.492,-2	.883,-2	.152,-1
13	.711,-2	.699,-2	.502,-2	.852,-2	.153,-1
14	.811,-2	.708,-2	.569,-2	.832,-2	.130,-1
15	.594,-2	.513,-2	.429,-2	.758,-2	.154,-1
16	.495,-2	.347,-2	.278,-2	.735,-2	.177,-1
17	.664,-2	.538,-2	.430,-2	.722,-2	.189,-1
18	.724,-2	.713,-2	.581,-2	.567,-2	.209,-1
19	.615,-2	.596,-2	.488,-2	.481,-2	.171,-1
20	.558,-2	.560,-2	.421,-2	.581,-2	.181,-1
21	.545,-2	.510,-2	.337,-2	.607,-2	.172,-1
22	.394,-2	.364,-2	.262,-2	.553,-2	.155,-1
23	.385,-2	.469,-2	.388,-2	.384,-2	.161,-1
24	.491,-2	.531,-2	.468,-2	.498,-2	.152,-1
25	.466,-2	.403,-2	.364,-2	.647,-2	.132,-1
26	.398,-2	.289,-2	.240,-2	.739,-2	.990,-2
27	.408,-2	.330,-2	.283,-2	.685,-2	.718,-2
28	.335,-2	.353,-2	.291,-2	.498,-2	.878,-2
29	.293,-2	.399,-2	.305,-2	.400,-2	.105,-1
30	.369,-2	.535,-2	.[illegible],-2	.353,-2	.898,-2
31	.354,-2	.576,-2	.461,-2	.381,-2	.898,-2
32	.342,-2	.455,-2	.420,-2	.429,-2	.114,-1
33	.389,-2	.496,-2	.374,-2	.579,-2	.131,-1
34	.415,-2	.625,-2	.435,-2	.600,-2	.113,-1
35	.462,-2	.424,-2	.283,-2	.439,-2	.890,-2
36	.473,-2	.335,-2	.197,-2	.372,-2	.896,-2
37	.386,-2	.314,-2	.192,-2	.348,-2	.118,-1
38	.294,-2	.306,-2	.200,-2	.361,-2	.112,-1
39	.314,-2	.346,-2	.267,-2	.451,-2	.744,-2
40	.361,-2	.429,-2	.362,-2	.466,-2	.649,-2
41	.330,-2	.529,-2	.405,-2	.463,-2	.958,-2
42	.270,-2	.572,-2	.406,-2	.469,-2	.128,-1
43	.298,-2	.530,-2	.376,-2	.350,-2	.102,-1
44	.330,-2	.560,-2	.352,-2	.385,-2	.898,-2
45	.363,-2	.520,-2	.294,-2	.447,-2	.126,-1
46	.379,-2	.416,-2	.289,-2	.408,-2	.128,-1
47	.315,-2	.359,-2	.260,-2	.324,-2	.997,-2
48	.273,-2	.357,-2	.239,-2	.299,-2	.986,-2
49	.264,-2	.431,-2	.217,-2	.289,-2	.926,-2
50	.260,-2	.536,-2	.271,-2	.299,-2	.105,-1
51	.263,-2	.397,-2	.184,-2	.327,-2	.122,-1
52	.327,-2	.272,-2	.162,-2	.307,-2	.898,-2
53	.385,-2	.276,-2	.210,-2	.311,-2	.869,-2
54	.295,-2	.315,-2	.230,-2	.262,-2	.118,-1
55	.244,-2	.429,-2	.283,-2	.206,-2	.119,-1
56	.219,-2	.593,-2	.375,-2	.249,-2	.913,-2
57	.236,-2	.598,-2	.412,-2	.351,-2	.888,-2
58	.298,-2	.504,-2	.393,-2	.416,-2	.718,-2
59	.280,-2	.486,-2	.327,-2	.350,-2	.604,-2
60	.217,-2	.411,-2	.260,-2	.266,-2	.558,-2

Run No. 55; w component

	Anemometer Position Number				
N	1	2	3	4	5
00	.271,-2	.227,-2	.340,-2	.338,-2	.347,-2
01	.318,-2	.370,-2	.363,-2	.410,-2	.377,-2
02	.311,-2	.477,-2	.355,-2	.397,-2	.369,-2
03	.415,-2	.362,-2	.373,-2	.351,-2	.319,-2
04	.491,-2	.367,-2	.358,-2	.402,-2	.364,-2
05	.385,-2	.509,-2	.370,-2	.432,-2	.396,-2
06	.313,-2	.466,-2	.474,-2	.405,-2	.431,-2
07	.277,-2	.345,-2	.483,-2	.356,-2	.616,-2
08	.254,-2	.428,-2	.314,-2	.275,-2	.593,-2
09	.205,-2	.428,-2	.255,-2	.259,-2	.411,-2
10	.258,-2	.404,-2	.320,-2	.348,-2	.343,-2
11	.379,-2	.371,-2	.266,-2	.353,-2	.336,-2
12	.325,-2	.330,-2	.316,-2	.299,-2	.298,-2
13	.262,-2	.292,-2	.444,-2	.274,-2	.271,-2
14	.258,-2	.280,-2	.358,-2	.283,-2	.327,-2
15	.258,-2	.365,-2	.256,-2	.297,-2	.388,-2
16	.340,-2	.391,-2	.227,-2	.363,-2	.439,-2
17	.336,-2	.381,-2	.204,-2	.379,-2	.407,-2
18	.235,-2	.365,-2	.263,-2	.281,-2	.359,-2
19	.186,-2	.275,-2	.328,-2	.233,-2	.393,-2
20	.165,-2	.217,-2	.336,-2	.221,-2	.407,-2
21	.165,-2	.209,-2	.289,-2	.279,-2	.422,-2
22	.205,-2	.220,-2	.203,-2	.391,-2	.355,-2
23	.273,-2	.249,-2	.189,-2	.420,-2	.236,-2
24	.302,-2	.293,-2	.222,-2	.343,-2	.266,-2
25	.271,-2	.319,-2	.197,-2	.231,-2	.317,-2
26	.229,-2	.264,-2	.156,-2	.232,-2	.356,-2
27	.198,-2	.302,-2	.238,-2	.220,-2	.390,-2
28	.221,-2	.375,-2	.340,-2	.268,-2	.442,-2
29	.316,-2	.361,-2	.329,-2	.330,-2	.466,-2
30	.294,-2	.293,-2	.285,-2	.294,-2	.451,-2
31	.207,-2	.299,-2	.224,-2	.258,-2	.353,-2
32	.171,-2	.294,-2	.173,-2	.250,-2	.218,-2
33	.205,-2	.302,-2	.164,-2	.273,-2	.200,-2
34	.270,-2	.294,-2	.206,-2	.330,-2	.265,-2
35	.301,-2	.286,-2	.251,-2	.287,-2	.290,-2
36	.360,-2	.272,-2	.260,-2	.267,-2	.258,-2
37	.356,-2	.226,-2	.270,-2	.275,-2	.296,-2
38	.291,-2	.191,-2	.278,-2	.270,-2	.331,-2
39	.239,-2	.210,-2	.163,-2	.295,-2	.388,-2
40	.267,-2	.297,-2	.104,-2	.329,-2	.370,-2
41	.283,-2	.307,-2	.132,-2	.291,-2	.322,-2
42	.197,-2	.283,-2	.144,-2	.216,-2	.303,-2
43	.162,-2	.310,-2	.154,-2	.212,-2	.363,-2
44	.189,-2	.301,-2	.172,-2	.187,-2	.351,-2
45	.246,-2	.287,-2	.128,-2	.217,-2	.290,-2
46	.256,-2	.264,-2	.113,-2	.248,-2	.346,-2
47	.255,-2	.290,-2	.148,-2	.275,-2	.335,-2
48	.302,-2	.348,-2	.148,-2	.229,-2	.267,-2
49	.295,-2	.[illegible]4,-2	.161,-2	.184,-2	.274,-2
50	.240,-2	.342,-2	.183,-2	.129,-2	.264,-2
51	.193,-2	.202,-2	.211,-2	.110,-2	.287,-2
52	.153,-2	.226,-2	.251,-2	.177,-2	.286,-2
53	.162,-2	.325,-2	.254,-2	.231,-2	.261,-2
54	.200,-2	.352,-2	.203,-2	.216,-2	.223,-2
55	.285,-2	.405,-2	.201,-2	.229,-2	.355,-2
56	.325,-2	.432,-2	.222,-2	.279,-2	.406,-2
57	.342,-2	.376,-2	.226,-2	.347,-2	.319,-2
58	.356,-2	.347,-2	.246,-2	.314,-2	.259,-2
59	.246,-2	.281,-2	.255,-2	.246,-2	.213,-2
60	.179,-2	.202,-2	.224,-2	.175,-2	.166,-2

Run No. 56; u component

	Anemometer Position Number				
N	1	2	3	4	5
00	.457,-1	.401,-1	.119	.701,-1	.111
01	.540,-1	.457,-1	.109	.621,-1	.132
02	.516,-1	.454,-1	.108	.523,-1	.143
03	.405,-1	.371,-1	.842,-1	.492,-1	.109
04	.337,-1	.323,-1	.536,-1	.443,-1	.891,-1
05	.316,-1	.262,-1	.338,-1	.334,-1	.667,-1
06	.293,-1	.202,-1	.254,-1	.223,-1	.625,-1
07	.208,-1	.198,-1	.195,-1	.222,-1	.552,-1
08	.159,-1	.183,-1	.190,-1	.190,-1	.404,-1
09	.136,-1	.121,-1	.235,-1	.147,-1	.300,-1
10	.130,-1	.105,-1	.208,-1	.156,-1	.232,-1
11	.112,-1	.900,-2	.147,-1	.123,-1	.233,-1
12	.118,-1	.858,-2	.138,-1	.994,-2	.279,-1
13	.105,-1	.879,-2	.137,-1	.106,-1	.278,-1
14	.695,-2	.931,-2	.127,-1	.109,-1	.215,-1
15	.606,-2	.907,-2	.142,-1	.102,-1	.162,-1
16	.705,-2	.749,-2	.158,-1	.810,-2	.137,-1
17	.772,-2	.905,-2	.115,-1	.695,-2	.112,-1
18	.696,-2	.790,-2	.829,-2	.756,-2	.923,-2
19	.647,-2	.689,-2	.730,-2	.708,-2	.952,-2
20	.647,-2	.809,-2	.618,-2	.779,-2	.108,-1
21	.621,-2	.607,-2	.567,-2	.849,-2	.126,-1
22	.747,-2	.491,-2	.616,-2	.810,-2	.113,-1
23	.674,-2	.456,-2	.557,-2	.793,-2	.111,-1
24	.561,-2	.408,-2	.565,-2	.699,-2	.105,-1
25	.410,-2	.457,-2	.677,-2	.569,-2	.924,-2
26	.323,-2	.499,-2	.612,-2	.579,-2	.806,-2
27	.343,-2	.508,-2	.507,-2	.527,-2	.109,-1
28	.369,-2	.403,-2	.365,-2	.504,-2	.118,-1
29	.338,-2	.287,-2	.257,-2	.454,-2	.866,-2
30	.264,-2	.332,-2	.332,-2	.329,-2	.777,-2
31	.256,-2	.302,-2	.386,-2	.270,-2	.716,-2
32	.388,-2	.264,-2	.437,-2	.334,-2	.589,-2
33	.494,-2	.279,-2	.478,-2	.354,-2	.625,-2
34	.422,-2	.296,-2	.395,-2	.251,-2	.796,-2
35	.388,-2	.239,-2	.376,-2	.233,-2	.581,-2
36	.401,-2	.257,-2	.505,-2	.252,-2	.458,-2
37	.311,-2	.333,-2	.488,-2	.269,-2	.487,-2
38	.271,-2	.299,-2	.366,-2	.233,-2	.468,-2
39	.346,-2	.202,-2	.366,-2	.208,-2	.414,-2
40	.306,-2	.251,-2	.337,-2	.227,-2	.407,-2
41	.243,-2	.234,-2	.269,-2	.177,-2	.452,-2
42	.198,-2	.205,-2	.235,-2	.177,-2	.390,-2
43	.200,-2	.155,-2	.225,-2	.194,-2	.360,-2
44	.236,-2	.201,-2	.207,-2	.198,-2	.494,-2
45	.201,-2	.281,-2	.209,-2	.222,-2	.447,-2
46	.201,-2	.283,-2	.227,-2	.232,-2	.365,-2
47	.207,-2	.250,-2	.222,-2	.201,-2	.305,-2
48	.191,-2	.221,-2	.254,-2	.181,-2	.362,-2
49	.155,-2	.205,-2	.231,-2	.208,-2	.337,-2
50	.165,-2	.156,-2	.292,-2	.248,-2	.267,-2
51	.150,-2	.151,-2	.264,-2	.279,-2	.350,-2
52	.139,-2	.133,-2	.251,-2	.305,-2	.373,-2
53	.165,-2	.140,-2	.248,-2	.262,-2	.332,-2
54	.177,-2	.169,-2	.195,-2	.161,-2	.288,-2
55	.187,-2	.198,-2	.210,-2	.169,-2	.299,-2
56	.215,-2	.192,-2	.271,-2	.178,-2	.494,-2
57	.163,-2	.149,-2	.279,-2	.197,-2	.517,-2
58	.159,-2	.155,-2	.221,-2	.191,-2	.427,-2
59	.158,-2	.174,-2	.153,-2	.130,-2	.331,-2
60	.134,-2	.158,-2	.119,-2	.928,-3	.246,-2

Run No. 56; v component

N	Anemometer Position Number 1	2	3	4	5
00	.111	.688,-1	.132	.101	.107
01	.576,-1	.366,-1	.691,-1	.533,-1	.616,-1
02	.119,-1	.918,-2	.171,-1	.107,-1	.126,-1
03	.871,-2	.827,-2	.148,-1	.614,-2	.121,-1
04	.837,-2	.659,-2	.119,-1	.698,-2	.148,-1
05	.962,-2	.491,-2	.940,-2	.740,-2	.133,-1
06	.834,-2	.402,-2	.976,-2	.582,-2	.101,-1
07	.753,-2	.439,-2	.122,-1	.612,-2	.883,-2
08	.589,-2	.409,-2	.123,-1	.593,-2	.762,-2
09	.578,-2	.371,-2	.129,-1	.643,-2	.722,-2
10	.777,-2	.446,-2	.104,-1	.764,-2	.748,-2
11	.758,-2	.424,-2	.570,-2	.791,-2	.571,-2
12	.724,-2	.454,-2	.741,-2	.594,-2	.559,-2
13	.793,-2	.415,-2	.831,-2	.556,-2	.459,-2
14	.700,-2	.273,-2	.635,-2	.609,-2	.646,-2
15	.505,-2	.268,-2	.457,-2	.632,-2	.692,-2
16	.542,-2	.273,-2	.435,-2	.511,-2	.608,-2
17	.443,-2	.256,-2	.676,-2	.604,-2	.585,-2
18	.374,-2	.274,-2	.794,-2	.648,-2	.591,-2
19	.405,-2	.314,-2	.578,-2	.526,-2	.627,-2
20	.453,-2	.364,-2	.627,-2	.424,-2	.511,-2
21	.386,-2	.344,-2	.796,-2	.300,-2	.397,-2
22	.301,-2	.344,-2	.665,-2	.394,-2	.363,-2
23	.391,-2	.360,-2	.448,-2	.353,-2	.271,-2
24	.494,-2	.314,-2	.450,-2	.300,-2	.272,-2
25	.495,-2	.279,-2	.593,-2	.288,-2	.367,-2
26	.583,-2	.302,-2	.620,-2	.260,-2	.324,-2
27	.534,-2	.252,-2	.581,-2	.234,-2	.273,-2
28	.413,-2	.243,-2	.573,-2	.242,-2	.388,-2
29	.381,-2	.261,-2	.477,-2	.251,-2	.410,-2
30	.321,-2	.197,-2	.397,-2	.264,-2	.381,-2
31	.310,-2	.169,-2	.434,-2	.272,-2	.326,-2
32	.398,-2	.229,-2	.591,-2	.233,-2	.325,-2
33	.392,-2	.320,-2	.607,-2	.202,-2	.358,-2
34	.342,-2	.292,-2	.494,-2	.244,-2	.294,-2
35	.477,-2	.289,-2	.434,-2	.252,-2	.292,-2
36	.540,-2	.286,-2	.351,-2	.203,-2	.287,-2
37	.391,-2	.230,-2	.392,-2	.147,-2	.250,-2
38	.235,-2	.247,-2	.426,-2	.156,-2	.223,-2
39	.369,-2	.307,-2	.469,-2	.223,-2	.249,-2
40	.472,-2	.351,-2	.369,-2	.245,-2	.294,-2
41	.394,-2	.218,-2	.273,-2	.250,-2	.247,-2
42	.324,-2	.174,-2	.339,-2	.234,-2	.178,-2
43	.244,-2	.226,-2	.362,-2	.197,-2	.246,-2
44	.256,-2	.287,-2	.419,-2	.231,-2	.318,-2
45	.367,-2	.251,-2	.437,-2	.209,-2	.287,-2
46	.350,-2	.183,-2	.360,-2	.137,-2	.257,-2
47	.320,-2	.223,-2	.359,-2	.126,-2	.222,-2
48	.307,-2	.211,-2	.379,-2	.181,-2	.210,-2
49	.256,-2	.206,-2	.383,-2	.210,-2	.192,-2
50	.239,-2	.242,-2	.325,-2	.162,-2	.189,-2
51	.225,-2	.234,-2	.229,-2	.121,-2	.241,-2
52	.289,-2	.188,-2	.249,-2	.123,-2	.306,-2
53	.355,-2	.187,-2	.259,-2	.148,-2	.298,-2
54	.385,-2	.200,-2	.360,-2	.173,-2	.299,-2
55	.435,-2	.228,-2	.450,-2	.134,-2	.230,-2
56	.467,-2	.201,-2	.450,-2	.118,-2	.171,-2
57	.443,-2	.137,-2	.377,-2	.156,-2	.247,-2
58	.292,-2	.122,-2	.238,-2	.135,-2	.322,-2
59	.244,-2	.146,-2	.230,-2	.105,-2	.281,-2
60	.245,-2	.141,-2	.208,-2	.102,-2	.191,-2

Run No. 56; w component

N	Anemometer Position Number 1	2	3	4	5
00	.161,-2	.130,-2	.101,-2	.387,-2	.188,-2
01	.224,-2	.165,-2	.207,-2	.427,-2	.238,-2
02	.250,-2	.215,-2	.374,-2	.379,-2	.272,-2
03	.239,-2	.243,-2	.414,-2	.316,-2	.305,-2
04	.302,-2	.262,-2	.523,-2	.300,-2	.365,-2
05	.355,-2	.261,-2	.599,-2	.243,-2	.312,-2
06	.340,-2	.207,-2	.419,-2	.233,-2	.331,-2
07	.250,-2	.184,-2	.329,-2	.192,-2	.308,-2
08	.291,-2	.229,-2	.385,-2	.181,-2	.190,-2
09	.426,-2	.275,-2	.319,-2	.227,-2	.194,-2
10	.331,-2	.291,-2	.218,-2	.228,-2	.200,-2
11	.272,-2	.318,-2	.261,-2	.224,-2	.222,-2
12	.277,-2	.268,-2	.275,-2	.213,-2	.223,-2
13	.240,-2	.177,-2	.326,-2	.285,-2	.222,-2
14	.266,-2	.210,-2	.349,-2	.317,-2	.231,-2
15	.277,-2	.210,-2	.317,-2	.284,-2	.229,-2
16	.232,-2	.177,-2	.253,-2	.212,-2	.199,-2
17	.236,-2	.201,-2	.205,-2	.186,-2	.179,-2
18	.241,-2	.223,-2	.218,-2	.219,-2	.162,-2
19	.210,-2	.196,-2	.263,-2	.237,-2	.174,-2
20	.245,-2	.179,-2	.339,-2	.226,-2	.190,-2
21	.274,-2	.156,-2	.297,-2	.222,-2	.170,-2
22	.312,-2	.181,-2	.235,-2	.199,-2	.172,-2
23	.371,-2	.210,-2	.189,-2	.112,-2	.194,-2
24	.322,-2	.199,-2	.182,-2	.972,-3	.179,-2
25	.222,-2	.183,-2	.197,-2	.139,-2	.173,-2
26	.244,-2	.189,-2	.209,-2	.174,-2	.171,-2
27	.271,-2	.206,-2	.224,-2	.177,-2	.174,-2
28	.264,-2	.199,-2	.196,-2	.154,-2	.204,-2
29	.253,-2	.186,-2	.184,-2	.157,-2	.179,-2
30	.326,-2	.158,-2	.190,-2	.152,-2	.178,-2
31	.376,-2	.118,-2	.165,-2	.153,-2	.213,-2
32	.256,-2	.126,-2	.165,-2	.130,-2	.196,-2
33	.256,-2	.168,-2	.202,-2	.116,-2	.170,-2
34	.371,-2	.189,-2	.172,-2	.142,-2	.185,-2
35	.374,-2	.186,-2	.147,-2	.140,-2	.191,-2
36	.330,-2	.178,-2	.125,-2	.161,-2	.151,-2
37	.311,-2	.145,-2	.109,-2	.157,-2	.146,-2
38	.200,-2	.170,-2	.159,-2	.152,-2	.168,-2
39	.301,-2	.189,-2	.194,-2	.185,-2	.156,-2
40	.212,-2	.165,-2	.199,-2	.232,-2	.157,-2
41	.103,-2	.150,-2	.189,-2	.269,-2	.197,-2
42	.120,-2	.158,-2	.204,-2	.211,-2	.201,-2
43	.181,-2	.176,-2	.175,-2	.171,-2	.195,-2
44	.245,-2	.155,-2	.207,-2	.204,-2	.183,-2
45	.248,-2	.139,-2	.224,-2	.223,-2	.138,-2
46	.233,-2	.150,-2	.206,-2	.190,-2	.178,-2
47	.197,-2	.148,-2	.218,-2	.141,-2	.225,-2
48	.199,-2	.125,-2	.200,-2	.106,-2	.169,-2
49	.250,-2	.135,-2	.243,-2	.123,-2	.192,-2
50	.294,-2	.156,-2	.317,-2	.165,-2	.220,-2
51	.291,-2	.174,-2	.255,-2	.226,-2	.179,-2
52	.205,-2	.187,-2	.210,-2	.198,-2	.147,-2
53	.168,-2	.169,-2	.154,-2	.134,-2	.165,-2
54	.201,-2	.169,-2	.171,-2	.172,-2	.176,-2
55	.245,-2	.180,-2	.240,-2	.195,-2	.153,-2
56	.246,-2	.178,-2	.270,-2	.177,-2	.182,-2
57	.230,-2	.168,-2	.232,-2	.154,-2	.200,-2
58	.215,-2	.154,-2	.194,-2	.123,-2	.193,-2
59	.210,-2	.145,-2	.128,-2	.136,-2	.146,-2
60	.328,-2	.123,-2	.778,-3	.144,-2	.121,-2

Run No. 58; u component

N	Anemometer Position Number 1	2	3	4	5
00	.246,-2	.232,-2	.210,-2	.120,-2	.757,-2
01	.220,-2	.193,-2	.240,-2	.121,-2	.588,-2
02	.231,-2	.128,-2	.265,-2	.117,-2	.365,-2
03	.217,-2	.121,-2	.225,-2	.116,-2	.242,-2
04	.199,-2	.158,-2	.202,-2	.117,-2	.208,-2
05	.205,-2	.155,-2	.190,-2	.115,-2	.305,-2
06	.162,-2	.114,-2	.195,-2	.121,-2	.352,-2
07	.137,-2	.102,-2	.239,-2	.115,-2	.354,-2
08	.193,-2	.133,-2	.231,-2	.108,-2	.426,-2
09	.223,-2	.170,-2	.201,-2	.138,-2	.443,-2
10	.169,-2	.116,-2	.164,-2	.147,-2	.385,-2
11	.116,-2	.820,-3	.109,-2	.143,-2	.355,-2
12	.109,-2	.110,-2	.128,-2	.145,-2	.279,-2
13	.118,-2	.105,-2	.151,-2	.140,-2	.237,-2
14	.109,-2	.835,-3	.157,-2	.126,-2	.235,-2
15	.998,-3	.867,-3	.155,-2	.115,-2	.230,-2
16	.114,-2	.774,-3	.138,-2	.115,-2	.222,-2
17	.121,-2	.754,-3	.151,-2	.926,-3	.208,-2
18	.117,-2	.855,-3	.148,-2	.801,-3	.241,-2
19	.112,-2	.775,-3	.120,-2	.862,-3	.236,-2
20	.117,-2	.655,-3	.121,-2	.884,-3	.268,-2
21	.107,-2	.604,-3	.120,-2	.841,-3	.286,-2
22	.786,-3	.525,-3	.106,-2	.621,-3	.199,-2
23	.886,-3	.507,-3	.874,-3	.677,-3	.173,-2
24	.982,-3	.538,-3	.771,-3	.912,-3	.169,-2
25	.102,-2	.559,-3	.965,-3	.948,-3	.153,-2
26	.898,-3	.649,-3	.132,-2	.815,-3	.185,-2
27	.845,-3	.651,-3	.114,-2	.681,-3	.174,-2
28	.104,-2	.539,-3	.118,-2	.624,-3	.135,-2
29	.763,-3	.462,-3	.123,-2	.726,-3	.106,-2
30	.356,-3	.432,-3	.898,-3	.758,-3	.102,-2
31	.375,-3	.395,-3	.624,-3	.542,-3	.124,-2
32	.458,-3	.324,-3	.716,-3	.533,-3	.110,-2
33	.515,-3	.356,-3	.874,-3	.641,-3	.110,-2
34	.417,-3	.454,-3	.933,-3	.601,-3	.159,-2
35	.415,-3	.438,-3	.992,-3	.643,-3	.149,-2
36	.407,-3	.437,-3	.105,-2	.686,-3	.109,-2
37	.363,-3	.389,-3	.109,-2	.585,-3	.819,-3
38	.433,-3	.316,-3	.857,-3	.526,-3	.101,-2
39	.461,-3	.389,-3	.579,-3	.479,-3	.127,-2
40	.540,-3	.467,-3	.543,-3	.482,-3	.112,-2
41	.513,-3	.398,-3	.700,-3	.456,-3	.841,-3
42	.460,-3	.263,-3	.648,-3	.380,-3	.899,-3
43	.471,-3	.232,-3	.528,-3	.317,-3	.978,-3
44	.485,-3	.291,-3	.544,-3	.302,-3	.851,-3
45	.570,-3	.281,-3	.561,-3	.320,-3	.696,-3
46	.498,-3	.227,-3	.542,-3	.364,-3	.901,-3
47	.391,-3	.184,-3	.469,-3	.394,-3	.105,-2
48	.410,-3	.194,-3	.540,-3	.364,-3	.912,-3
49	.439,-3	.186,-3	.692,-3	.399,-3	.796,-3
50	.329,-3	.209,-3	.820,-3	.390,-3	.963,-3
51	.367,-3	.183,-3	.599,-3	.278,-3	.101,-2
52	.433,-3	.174,-3	.424,-3	.337,-3	.878,-3
53	.423,-3	.287,-3	.469,-3	.411,-3	.849,-3
54	.333,-3	.300,-3	.406,-3	.356,-3	.899,-3
55	.393,-3	.305,-3	.302,-3	.322,-3	.898,-3
56	.439,-3	.280,-3	.358,-3	.332,-3	.921,-3
57	.398,-3	.197,-3	.499,-3	.399,-3	.881,-3
58	.317,-3	.168,-3	.552,-3	.339,-3	.725,-3
59	.291,-3	.134,-3	.464,-3	.327,-3	.439,-3
60	.230,-3	.107,-3	.355,-3	.335,-3	.264,-3

Run No. 58; v component

N	Anemometer Position Number 1	2	3	4	5
00	.265,-2	.440,-2	.317,-2	.260,-2	.346,-2
01	.159,-2	.291,-2	.201,-2	.194,-2	.307,-2
02	.773,-3	.164,-2	.118,-2	.135,-2	.236,-2
03	.558,-3	.130,-2	.129,-2	.158,-2	.263,-2
04	.543,-3	.110,-2	.172,-2	.128,-2	.357,-2
05	.603,-3	.119,-2	.252,-2	.104,-2	.373,-2
06	.635,-3	.128,-2	.197,-2	.115,-2	.288,-2
07	.697,-3	.147,-2	.160,-2	.122,-2	.212,-2
08	.611,-3	.150,-2	.180,-2	.114,-2	.240,-2
09	.629,-3	.109,-2	.174,-2	.786,-3	.247,-2
10	.740,-3	.101,-2	.154,-2	.667,-3	.205,-2
11	.876,-3	.147,-2	.184,-2	.770,-3	.130,-2
12	.945,-3	.102,-2	.196,-2	.762,-3	.135,-2
13	.969,-3	.158,-2	.154,-2	.686,-3	.176,-2
14	.804,-3	.131,-2	.136,-2	.696,-3	.224,-2
15	.536,-3	.142,-2	.136,-2	.715,-3	.215,-2
16	.553,-3	.164,-2	.134,-2	.671,-3	.180,-2
17	.751,-3	.165,-2	.104,-2	.634,-3	.166,-2
18	.689,-3	.159,-2	.853,-3	.606,-3	.127,-2
19	.471,-3	.105,-2	.920,-3	.491,-3	.133,-2
20	.491,-3	.856,-3	.932,-3	.548,-3	.150,-2
21	.628,-3	.123,-2	.752,-3	.642,-3	.124,-2
22	.753,-3	.145,-2	.816,-3	.517,-3	.121,-2
23	.823,-3	.109,-2	.111,-2	.425,-3	.136,-2
24	.752,-3	.101,-2	.115,-2	.502,-3	.153,-2
25	.837,-3	.113,-2	.899,-3	.499,-3	.141,-2
26	.808,-3	.837,-3	.674,-3	.395,-3	.112,-2
27	.790,-3	.721,-3	.680,-3	.385,-3	.122,-2
28	.828,-3	.107,-2	.707,-3	.602,-3	.142,-2
29	.790,-3	.163,-2	.608,-3	.704,-3	.131,-2
30	.732,-3	.138,-2	.731,-3	.496,-3	.121,-2
31	.530,-3	.996,-3	.927,-3	.399,-3	.127,-2
32	.442,-3	.900,-3	.779,-3	.511,-3	.126,-2
33	.473,-3	.105,-2	.766,-3	.550,-3	.899,-3
34	.552,-3	.106,-2	.732,-3	.432,-3	.813,-3
35	.707,-3	.905,-3	.590,-3	.434,-3	.941,-3
36	.653,-3	.851,-3	.479,-3	.605,-3	.105,-2
37	.633,-3	.712,-3	.462,-3	.558,-3	.935,-3
38	.534,-3	.826,-3	.475,-3	.359,-3	.908,-3
39	.414,-3	.783,-3	.515,-3	.404,-3	.966,-3
40	.408,-3	.770,-3	.499,-3	.421,-3	.101,-2
41	.527,-3	.720,-3	.723,-3	.353,-3	.108,-2
42	.606,-3	.516,-3	.898,-3	.305,-3	.105,-2
43	.673,-3	.561,-3	.682,-3	.408,-3	.810,-3
44	.729,-3	.543,-3	.577,-3	.463,-3	.987,-3
45	.699,-3	.639,-3	.548,-3	.356,-3	.957,-3
46	.728,-3	.861,-3	.642,-3	.276,-3	.864,-3
47	.690,-3	.922,-3	.656,-3	.338,-3	.815,-3
48	.549,-3	.829,-3	.612,-3	.342,-3	.957,-3
49	.447,-3	.674,-3	.718,-3	.347,-3	.110,-2
50	.381,-3	.518,-3	.872,-3	.481,-3	.139,-2
51	.429,-3	.550,-3	.665,-3	.414,-3	.143,-2
52	.464,-3	.533,-3	.536,-3	.295,-3	.953,-3
53	.507,-3	.684,-3	.518,-3	.913,-3	.109,-2
54	.762,-3	.695,-3	.527,-3	.327,-3	.130,-2
55	.876,-3	.601,-3	.530,-3	.304,-3	.105,-2
56	.732,-3	.619,-3	.419,-3	.324,-3	.808,-3
57	.647,-3	.678,-3	.435,-3	.385,-3	.114,-2
58	.608,-3	.786,-3	.489,-3	.335,-3	.131,-2
59	.508,-3	.846,-3	.349,-3	.240,-3	.941,-3
60	.384,-3	.681,-3	.258,-3	.205,-3	.595,-3

Run No. 58; w component

N	Anemometer Position Number 1	2	3	4	5
00	.196,-3	.871,-4	.136,-3	.830,-4	.157,-3
01	.307,-3	.922,-4	.127,-3	.106,-3	.156,-3
02	.397,-3	.930,-4	.114,-3	.135,-3	.171,-3
03	.301,-3	.940,-4	.986,-4	.135,-3	.153,-3
04	.223,-3	.959,-4	.113,-3	.119,-3	.161,-3
05	.227,-3	.927,-4	.142,-3	.132,-3	.244,-3
06	.234,-3	.753,-4	.154,-3	.150,-3	.219,-3
07	.25.,-3	.772,-4	.126,-3	.139,-3	.169,-3
08	.305,-3	.746,-4	.146,-3	.139,-3	.185,-3
09	.240,-3	.944,-4	.195,-3	.116,-3	.145,-3
10	.236,-3	.988,-4	.168,-3	.104,-3	.144,-3
11	.283,-3	.956,-4	.101,-3	.115,-3	.191,-3
12	.316,-3	.982,-4	.972,-4	.814,-4	.204,-3
13	.353,-3	.720,-4	.135,-3	.100,-3	.201,-3
14	.319,-3	.700,-4	.126,-3	.154,-3	.196,-3
15	.285,-3	.128,-3	.129,-3	.157,-3	.195,-3
16	.271,-3	.160,-3	.143,-3	.109,-3	.162,-3
17	.270,-3	.144,-3	.139,-3	.955,-4	.148,-3
18	.265,-3	.147,-3	.115,-3	.109,-3	.172,-3
19	.205,-3	.141,-3	.102,-3	.118,-3	.190,-3
20	.240,-3	.121,-3	.128,-3	.137,-3	.210,-3
21	.346,-3	.106,-3	.154,-3	.120,-3	.190,-3
22	.355,-3	.934,-4	.129,-3	.960,-4	.141,-3
23	.316,-3	.105,-3	.142,-3	.897,-4	.130,-3
24	.331,-3	.113,-3	.150,-3	.138,-3	.146,-3
25	.321,-3	.106,-3	.141,-3	.153,-3	.151,-3
26	.277,-3	.996,-4	.133,-3	.107,-3	.133,-3
27	.260,-3	.101,-3	.134,-3	.110,-3	.123,-3
28	.341,-3	.913,-4	.113,-3	.138,-3	.134,-3
29	.386,-3	.849,-4	.130,-3	.128,-3	.122,-3
30	.322,-3	.779,-4	.128,-3	.945,-4	.138,-3
31	.239,-3	.845,-4	.105,-3	.956,-4	.139,-3
32	.258,-3	.938,-4	.114,-3	.106,-3	.142,-3
33	.240,-3	.910,-4	.103,-3	.133,-3	.138,-3
34	.249,-3	.110,-3	.801,-4	.116,-3	.143,-3
35	.300,-3	.122,-3	.898,-4	.989,-4	.164,-3
36	.322,-3	.900,-4	.112,-3	.124,-3	.162,-3
37	.355,-3	.965,-4	.958,-4	.148,-3	.151,-3
38	.325,-3	.715,-4	.838,-4	.142,-3	.153,-3
39	.314,-3	.902,-4	.683,-4	.140,-3	.174,-3
40	.408,-3	.116,-3	.730,-4	.114,-3	.184,-3
41	.418,-3	.121,-3	.828,-4	.990,-4	.147,-3
42	.313,-3	.120,-3	.101,-3	.755,-4	.127,-3
43	.292,-3	.109,-3	.120,-3	.702,-4	.172,-3
44	.264,-3	.840,-4	.104,-3	.852,-4	.181,-3
45	.243,-3	.834,-4	.102,-3	.826,-4	.143,-3
46	.215,-3	.998,-4	.111,-3	.912,-4	.106,-3
47	.244,-3	.101,-3	.965,-4	.914,-4	.109,-3
48	.279,-3	.675,-4	.795,-4	.803,-4	.153,-3
49	.321,-3	.510,-4	.904,-4	.645,-4	.201,-3
50	.331,-3	.692,-4	.985,-4	.675,-4	.199,-3
51	.288,-3	.104,-3	.109,-3	.741,-4	.192,-3
52	.264,-3	.128,-3	.131,-3	.732,-4	.153,-3
53	.275,-3	.105,-3	.159,-3	.810,-4	.135,-3
54	.315,-3	.845,-4	.139,-3	.104,-3	.126,-3
55	.296,-3	.102,-3	.926,-4	.109,-3	.117,-3
56	.293,-3	.125,-3	.735,-4	.109,-3	.125,-3
57	.313,-3	.107,-3	.727,-4	.105,-3	.122,-3
58	.309,-3	.100,-3	.876,-4	.918,-4	.133,-3
59	.304,-3	.871,-4	.916,-4	.901,-4	.146,-3
60	.276,-3	.633,-4	.802,-4	.823,-4	.145,-3

Run No. 59: u component

N	Anemometer Position Number 1	2	3	4	5
00	.115,-1	.132,-1	.906,-2	.123,-1	.467,-2
01	.107,-1	.983,-2	.866,-2	.109,-1	.447,-2
02	.920,-2	.554,-2	.734,-2	.931,-2	.400,-2
03	.902,-2	.518,-2	.474,-2	.788,-2	.304,-2
04	.795,-2	.586,-2	.358,-2	.614,-2	.291,-2
05	.748,-2	.549,-2	.368,-2	.638,-2	.285,-2
06	.769,-2	.464,-2	.333,-2	.671,-2	.387,-2
07	.711,-2	.470,-2	.276,-2	.650,-2	.405,-2
08	.604,-2	.538,-2	.345,-2	.653,-2	.311,-2
09	.593,-2	.647,-2	.388,-2	.634,-2	.326,-2
10	.576,-2	.453,-2	.362,-2	.578,-2	.295,-2
11	.483,-2	.310,-2	.383,-2	.470,-2	.222,-2
12	.374,-2	.325,-2	.338,-2	.374,-2	.250,-2
13	.367,-2	.339,-2	.407,-2	.266,-2	.338,-2
14	.452,-2	.363,-2	.457,-2	.233,-2	.296,-2
15	.396,-2	.301,-2	.334,-2	.264,-2	.277,-2
16	.290,-2	.273,-2	.260,-2	.283,-2	.254,-2
17	.270,-2	.248,-2	.263,-2	.257,-2	.184,-2
18	.273,-2	.233,-2	.277,-2	.277,-2	.148,-2
19	.241,-2	.132,-2	.315,-2	.292,-2	.141,-2
20	.251,-2	.168,-2	.282,-2	.262,-2	.143,-2
21	.200,-2	.177,-2	.198,-2	.212,-2	.160,-2
22	.177,-2	.175,-2	.182,-2	.175,-2	.153,-2
23	.192,-2	.170,-2	.166,-2	.235,-2	.155,-2
24	.212,-2	.145,-2	.159,-2	.325,-2	.129,-2
25	.230,-2	.121,-2	.163,-2	.326,-2	.126,-2
26	.214,-2	.121,-2	.155,-2	.215,-2	.111,-2
27	.138,-2	.129,-2	.141,-2	.160,-2	.715,-3
28	.104,-2	.153,-2	.137,-2	.153,-2	.968,-3
29	.126,-2	.153,-2	.132,-2	.116,-2	.122,-2
30	.145,-2	.112,-2	.119,-2	.114,-2	.925,-3
31	.978,-3	.809,-3	.109,-2	.114,-2	.676,-3
32	.908,-3	.705,-3	.134,-2	.100,-2	.767,-3
33	.122,-2	.849,-3	.161,-2	.768,-3	.845,-3
34	.107,-2	.722,-3	.147,-2	.983,-3	.912,-3
35	.119,-2	.608,-3	.123,-2	.118,-2	.936,-3
36	.127,-2	.704,-3	.133,-2	.109,-2	.872,-3
37	.104,-2	.769,-3	.111,-2	.100,-2	.105,-2
38	.121,-2	.769,-3	.918,-3	.114,-2	.125,-2
39	.146,-2	.739,-3	.830,-3	.122,-2	.115,-2
40	.990,-3	.717,-3	.784,-3	.105,-2	.863,-3
41	.732,-3	.672,-3	.934,-3	.804,-3	.691,-3
42	.104,-2	.745,-3	.114,-2	.753,-3	.725,-3
43	.107,-2	.820,-3	.102,-2	.833,-3	.874,-3
44	.783,-3	.724,-3	.792,-3	.826,-3	.784,-3
45	.722,-3	.504,-3	.790,-3	.783,-3	.925,-3
46	.611,-3	.565,-3	.986,-3	.799,-3	.863,-3
47	.538,-3	.461,-3	.119,-2	.796,-3	.586,-3
48	.627,-3	.511,-3	.106,-2	.924,-3	.559,-3
49	.679,-3	.440,-3	.805,-3	.846,-3	.548,-3
50	.502,-3	.491,-3	.102,-2	.800,-3	.504,-3
51	.445,-3	.529,-3	.133,-2	.788,-3	.465,-3
52	.578,-3	.657,-3	.117,-2	.614,-3	.650,-3
53	.616,-3	.627,-3	.704,-3	.493,-3	.867,-3
54	.707,-3	.493,-3	.597,-3	.644,-3	.913,-3
55	.842,-3	.548,-3	.701,-3	.735,-3	.663,-3
56	.856,-3	.401,-3	.751,-3	.749,-3	.551,-3
57	.896,-3	.367,-3	.705,-3	.596,-3	.565,-3
58	.727,-3	.525,-3	.613,-3	.540,-3	.471,-3
59	.574,-3	.499,-3	.497,-3	.652,-3	.423,-3
60	.506,-3	.344,-3	.442,-3	.588,-3	.377,-3

Run No. 59; v component

	Anemometer Position Number				
N	1	2	3	4	5
00	.714,-2	.672,-2	.100,-1	.313,-2	.185,-1
01	.543,-2	.808,-2	.779,-2	.260,-2	.162,-1
02	.274,-2	.833,-2	.543,-2	.167,-2	.117,-1
03	.248,-2	.600,-2	.539,-2	.130,-2	.116,-1
04	.316,-2	.438,-2	.601,-2	.112,-2	.118,-1
05	.294,-2	.370,-2	.580,-2	.979,-3	.114,-1
06	.353,-2	.264,-2	.534,-2	.116,-2	.109,-1
07	.356,-2	.276,-2	.467,-2	.151,-2	.768,-2
08	.255,-2	.335,-2	.376,-2	.142,-2	.631,-2
09	.261,-2	.265,-2	.333,-2	.141,-2	.815,-2
10	.325,-2	.187,-2	.335,-2	.124,-2	.827,-2
11	.271,-2	.178,-2	.247,-2	.122,-2	.466,-2
12	.261,-2	.260,-2	.237,-2	.138,-2	.320,-2
13	.368,-2	.282,-2	.296,-2	.138,-2	.385,-2
14	.364,-2	.204,-2	.371,-2	.113,-2	.315,-2
15	.260,-2	.160,-2	.350,-2	.114,-2	.248,-2
16	.218,-2	.150,-2	.263,-2	.131,-2	.276,-2
17	.190,-2	.187,-2	.213,-2	.145,-2	.215,-2
18	.250,-2	.184,-2	.148,-2	.132,-2	.235,-2
19	.244,-2	.137,-2	.111,-2	.112,-2	.305,-2
20	.189,-2	.142,-2	.130,-2	.117,-2	.341,-2
21	.151,-2	.153,-2	.205,-2	.115,-2	.365,-2
22	.137,-2	.128,-2	.260,-2	.909,-3	.301,-2
23	.149,-2	.133,-2	.230,-2	.983,-3	.210,-2
24	.166,-2	.158,-2	.173,-2	.982,-3	.179,-2
25	.186,-2	.129,-2	.129,-2	.100,-2	.206,-2
26	.218,-2	.765,-3	.129,-2	.118,-2	.206,-2
27	.201,-2	.623,-3	.149,-2	.119,-2	.177,-2
28	.152,-2	.956,-3	.138,-2	.947,-3	.201,-2
29	.170,-2	.132,-2	.156,-2	.652,-3	.243,-2
30	.142,-2	.151,-2	.182,-2	.906,-3	.194,-2
31	.896,-3	.162,-2	.191,-2	.907,-3	.183,-2
32	.856,-3	.128,-2	.161,-2	.755,-3	.178,-2
33	.127,-2	.855,-3	.120,-2	.872,-3	.159,-2
34	.157,-2	.688,-3	.971,-3	.817,-3	.156,-2
35	.117,-2	.589,-3	.115,-2	.767,-3	.116,-2
36	.111,-2	.593,-3	.169,-2	.976,-3	.982,-3
37	.108,-2	.722,-3	.150,-2	.893,-3	.106,-2
38	.968,-3	.110,-2	.107,-2	.740,-3	.117,-2
39	.875,-3	.115,-2	.113,-2	.705,-3	.136,-2
40	.865,-3	.811,-3	.115,-2	.735,-3	.143,-2
41	.889,-3	.844,-3	.101,-2	.811,-3	.133,-2
42	.987,-3	.865,-3	.100,-2	.811,-3	.112,-2
43	.135,-2	.730,-3	.109,-2	.743,-3	.108,-2
44	.116,-2	.444,-3	.857,-3	.648,-3	.129,-2
45	.943,-3	.411,-3	.779,-3	.545,-3	.117,-2
46	.109,-2	.594,-3	.878,-3	.491,-3	.111,-2
47	.104,-2	.816,-3	.115,-2	.625,-3	.108,-2
48	.151,-2	.829,-3	.124,-2	.582,-3	.109,-2
49	.175,-2	.781,-3	.110,-2	.545,-3	.989,-3
50	.107,-2	.721,-3	.107,-2	.598,-3	.104,-2
51	.711,-3	.639,-3	.114,-2	.679,-3	.111,-2
52	.662,-3	.599,-3	.102,-2	.751,-3	.110,-2
53	.575,-3	.553,-3	.908,-3	.829,-3	.970,-3
54	.592,-3	.583,-3	.790,-3	.806,-3	.919,-3
55	.824,-3	.669,-3	.116,-2	.701,-3	.112,-2
56	.813,-3	.627,-3	.137,-2	.583,-3	.121,-2
57	.758,-3	.712,-3	.115,-2	.793,-3	.109,-2
58	.829,-3	.105,-2	.109,-2	.104,-2	.107,-2
59	.827,-3	.881,-3	.912,-3	.895,-3	.758,-3
60	.628,-3	.542,-3	.664,-3	.708,-3	.531,-3

Run No. 59; v component

	Anemometer Position Number				
N	1	2	3	4	5
00	.609,-3	.190,-3	.265,-3	.319,-3	.265,-3
01	.734,-3	.210,-3	.292,-3	.371,-3	.361,-3
02	.951,-3	.226,-3	.322,-3	.385,-3	.373,-3
03	.125,-2	.243,-3	.304,-3	.328,-3	.277,-3	
04	.113,-2	.331,-3	.324,-3	.296,-3	.264,-3
05	.792,-3	.329,-3	.318,-3	.274,-3	.293,-3
06	.567,-3	.266,-3	.413,-3	.328,-3	.311,-3
07	.674,-3	.250,-3	.538,-3	.329,-3	.312,-3
08	.874,-3	.264,-3	.452,-3	.262,-3	.318,-3
09	.795,-3	.268,-3	.272,-3	.371,-3	.342,-3
10	.810,-3	.266,-3	.265,-3	.478,-3	.305,-3
11	.678,-3	.250,-3	.254,-3	.449,-3	.2[illegible],-3
12	.656,-3	.190,-3	.302,-3	.407,-3	.334,-3
13	.787,-3	.164,-3	.288,-3	.365,-3	.435,-3
14	.845,-3	.172,-3	.166,-3	.344,-3	.438,-3
15	.802,-3	.189,-3	.248,-3	.332,-3	.312,-3
16	.677,-3	.262,-3	.373,-3	.453,-3	.277,-3
17	.587,-3	.333,-3	.380,-3	.386,-3	.288,-3
18	.591,-3	.349,-3	.310,-3	.281,-3	.294,-3
19	.670,-3	.241,-3	.304,-3	.297,-3	.243,-3
20	.699,-3	.195,-3	.367,-3	.258,-3	.282,-3
21	.588,-3	.212,-3	.456,-3	.227,-3	.301,-3
22	.679,-3	.231,-3	.437,-3	.189,-3	.322,-3
23	.697,-3	.181,-3	.359,-3	.206,-3	.326,-3
24	.713,-3	.233,-3	.352,-3	.252,-3	.288,-3
25	.696,-3	.304,-3	.362,-3	.373,-3	.243,-3
26	.774,-3	.275,-3	.404,-3	.376,-3	.287,-3
27	.759,-3	.221,-3	.320,-3	.252,-3	.282,-3
28	.544,-3	.205,-3	.332,-3	.215,-3	.204,-3
29	.592,-3	.210,-3	.335,-3	.301,-3	.192,-3
30	.840,-3	.178,-3	.285,-3	.461,-3	.223,-3
31	.905,-3	.227,-3	.274,-3	.416,-3	.318,-3
32	.657,-3	.212,-3	.306,-3	.238,-3	.315,-3
33	.591,-3	.216,-3	.348,-3	.208,-3	.331,-3
34	.754,-3	.251,-3	.321,-3	.244,-3	.442,-3
35	.835,-3	.261,-3	.237,-3	.238,-3	.445,-3
36	.569,-3	.247,-3	.246,-3	.266,-3	.381,-3
37	.532,-3	.273,-3	.313,-3	.367,-3	.309,-3
38	.976,-3	.256,-3	.354,-3	.405,-3	.309,-3
39	.111,-2	.249,-3	.328,-3	.265,-3	.285,-3
40	.911,-3	.243,-3	.247,-3	.179,-3	.226,-3
41	.737,-3	.218,-3	.261,-3	.206,-3	.251,-3
42	.604,-3	.243,-3	.281,-3	.277,-3	.268,-3
43	.555,-3	.264,-3	.302,-3	.244,-3	.268,-3
44	.629,-3	.265,-3	.369,-3	.278,-3	.214,-3
45	.505,-3	.338,-3	.317,-3	.321,-3	.187,-3
46	.648,-3	.329,-3	.253,-3	.274,-3	.179,-3
47	.854,-3	.205,-3	.256,-3	.248,-3	.212,-3
48	.707,-3	.191,-3	.344,-3	.258,-3	.334,-3
49	.575,-3	.262,-3	.342,-3	.312,-3	.344,-3
50	.756,-3	.270,-3	.312,-3	.333,-3	.218,-3
51	.704,-3	.247,-3	.356,-3	.265,-3	.269,-3
52	.530,-3	.251,-3	.375,-3	.214,-3	.355,-3
53	.490,-3	.250,-3	.319,-3	.223,-3	.301,-3
54	.458,-3	.277,-3	.284,-3	.202,-3	.282,-3
55	.468,-3	.276,-3	.330,-3	.221,-3	.278,-3
56	.601,-3	.214,-3	.333,-3	.274,-3	.261,-3
57	.613,-3	.176,-3	.281,-3	.316,-3	.288,-3
58	.596,-3	.198,-3	.302,-3	.364,-3	.270,-3
59	.324,-3	.230,-3	.336,-3	.316,-3	.223,-3
60	.422,-3	.205,-3	.303,-3	.247,-3	.187,-3

Run No. 60; u component

N	Anemometer Position Number 1	2	3	4	5
00	.638,-1	.629,-1	.894,-1	.772,-1	.130
01	.602,-1	.559,-1	.759,-1	.686,-1	.125
02	.453,-1	.394,-1	.566,-1	.547,-1	.106
03	.454,-1	.372,-1	.577,-1	.429,-1	.869,-1
04	.393,-1	.319,-1	.474,-1	.420,-1	.547,-1
05	.265,-1	.216,-1	.320,-1	.446,-1	.384,-1
06	.189,-1	.142,-1	.262,-1	.302,-1	.351,-1
07	.141,-1	.106,-1	.195,-1	.189,-1	.299,-1
08	.174,-1	.128,-1	.180,-1	.186,-1	.299,-1
09	.143,-1	.132,-1	.194,-1	.216,-1	.315,-1
10	.933,-2	.111,-1	.194,-1	.193,-1	.291,-1
11	.943,-2	.923,-2	.192,-1	.153,-1	.221,-1
12	.952,-2	.800,-2	.163,-1	.126,-1	.184,-1
13	.930,-2	.694,-2	.117,-1	.886,-2	.178,-1
14	.960,-2	.660,-2	.109,-1	.815,-2	.158,-1
15	.865,-2	.623,-2	.109,-1	.965,-2	.130,-1
16	.754,-2	.550,-2	.121,-1	.910,-2	.140,-1
17	.914,-2	.536,-2	.138,-1	.656,-2	.141,-1
18	.857,-2	.589,-2	.108,-1	.493,-2	.106,-1
19	.610,-2	.499,-2	.834,-2	.433,-2	.737,-2
20	.601,-2	.486,-2	.733,-2	.541,-2	.882,-2
21	.605,-2	.381,-2	.705,-2	.549,-2	.104,-1
22	.520,-2	.450,-2	.730,-2	.539,-2	.124,-1
23	.551,-2	.616,-2	.721,-2	.530,-2	.161,-1
24	.654,-2	.661,-2	.663,-2	.548,-2	.121,-1
25	.515,-2	.434,-2	.544,-2	.445,-2	.784,-2
26	.449,-2	.468,-2	.440,-2	.394,-2	.614,-2
27	.454,-2	.551,-2	.396,-2	.357,-2	.503,-2
28	.447,-2	.387,-2	.362,-2	.287,-2	.601,-2
29	.426,-2	.375,-2	.407,-2	.345,-2	.538,-2
30	.285,-2	.324,-2	.473,-2	.372,-2	.370,-2
31	.199,-2	.245,-2	.417,-2	.372,-2	.515,-2
32	.225,-2	.225,-2	.432,-2	.333,-2	.642,-2
33	.294,-2	.230,-2	.365,-2	.325,-2	.459,-2
34	.357,-2	.238,-2	.304,-2	.236,-2	.440,-2
35	.38[illegible],-2	.311,-2	.278,-2	.218,-2	.475,-2
36	.259,-2	.336,-2	.329,-2	.321,-2	.340,-2
37	.182,-2	.259,-2	.418,-2	.300,-2	.365,-2
38	.145,-2	.191,-2	.516,-2	.227,-2	.500,-2
39	.187,-2	.156,-2	.399,-2	.261,-2	.461,-2
40	.247,-2	.153,-2	.312,-2	.320,-2	.346,-2
41	.293,-2	.129,-2	.319,-2	.280,-2	.327,-2
42	.272,-2	.124,-2	.299,-2	.285,-2	.342,-2
43	.266,-2	.128,-2	.333,-2	.300,-2	.305,-2
44	.249,-2	.219,-2	.377,-2	.269,-2	.277,-2
45	.239,-2	.296,-2	.263,-2	.262,-2	.371,-2
46	.215,-2	.228,-2	.237,-2	.259,-2	.405,-2
47	.165,-2	.187,-2	.251,-2	.234,-2	.306,-2
48	.189,-2	.187,-2	.308,-2	.191,-2	.356,-2
49	.181,-2	.150,-2	.240,-2	.230,-2	.401,-2
50	.207,-2	.160,-2	.208,-2	.247,-2	.414,-2
51	.225,-2	.181,-2	.243,-2	.226,-2	.331,-2
52	.179,-2	.166,-2	.188,-2	.215,-2	.224,-2
53	.208,-2	.204,-2	.197,-2	.247,-2	.210,-2
54	.216,-2	.225,-2	.207,-2	.240,-2	.275,-2
55	.160,-2	.226,-2	.186,-2	.263,-2	.306,-2
56	.173,-2	.191,-2	.164,-2	.255,-2	.326,-2
57	.164,-2	.153,-2	.174,-2	.216,-2	.331,-2
58	.140,-2	.147,-2	.209,-2	.203,-2	.267,-2
59	.132,-2	.148,-2	.195,-2	.213,-2	.212,-2
60	.111,-2	.141,-2	.160,-2	.198,-2	.161,-2

Run No. 60; v component

	Anemometer Position Number				
L	1	2	3	4	5
00	.865,-2	.103,-1	.186,-1	.132,-1	.360,-1
01	.821,-2	.959,-2	.151,-1	.130,-1	.262,-1
02	.746,-2	.714,-2	.107,-1	.115,-1	.204,-1
03	.565,-2	.502,-2	.766,-2	.101,-1	.221,-1
04	.464,-2	.429,-2	.493,-2	.956,-2	.172,-1
05	.464,-2	.385,-2	.679,-2	.108,-1	.127,-1
06	.352,-2	.449,-2	.779,-2	.118,-1	.114,-1
07	.381,-2	.545,-2	.528,-2	.999,-2	.980,-2
08	.475,-2	.407,-2	.417,-2	.106,-1	.919,-2
09	.445,-2	.343,-2	.502,-2	.998,-2	.890,-2
10	.350,-2	.339,-2	.534,-2	.601,-2	.529,-2
11	.385,-2	.388,-2	.422,-2	.726,-2	.810,-2
12	.307,-2	.330,-2	.323,-2	.106,-1	.767,-2
13	.252,-2	.206,-2	.381,-2	.935,-2	.647,-2
14	.325,-2	.298,-2	.493,-2	.836,-2	.593,-2
15	.434,-2	.481,-2	.438,-2	.727,-2	.693,-2
16	.375,-2	.476,-2	.395,-2	.662,-2	.765,-2
17	.317,-2	.316,-2	.551,-2	.812,-2	.675,-2
18	.337,-2	.299,-2	.564,-2	.793,-2	.566,-2
19	.333,-2	.269,-2	.391,-2	.679,-2	.684,-2
20	.299,-2	.333,-2	.426,-2	.602,-2	.703,-2
21	.284,-2	.393,-2	.496,-2	.664,-2	.656,-2
22	.237,-2	.270,-2	.499,-2	.665,-2	.668,-2
23	.197,-2	.205,-2	.495,-2	.642,-2	.618,-2
24	.219,-2	.228,-2	.516,-2	.726,-2	.485,-2
25	.264,-2	.234,-2	.559,-2	.723,-2	.429,-2
26	.234,-2	.252,-2	.739,-2	.509,-2	.514,-2
27	.255,-2	.281,-2	.714,-2	.492,-2	.464,-2
28	.230,-2	.262,-2	.499,-2	.543,-2	.447,-2
29	.202,-2	.253,-2	.431,-2	.452,-2	.570,-2
30	.240,-2	.224,-2	.446,-2	.476,-2	.669,-2
31	.265,-2	.202,-2	.465,-2	.592,-2	.645,-2
32	.266,-2	.283,-2	.396,-2	.568,-2	.599,-2
33	.243,-2	.321,-2	.346,-2	.398,-2	.571,-2
34	.235,-2	.258,-2	.297,-2	.249,-2	.568,-2
35	.214,-2	.220,-2	.356,-2	.362,-2	.617,-2
36	.245,-2	.234,-2	.516,-2	.393,-2	.521,-2
37	.273,-2	.209,-2	.431,-2	.382,-2	.433,-2
38	.234,-2	.285,-2	.358,-2	.436,-2	.457,-2
39	.202,-2	.247,-2	.354,-2	.426,-2	.419,-2
40	.197,-2	.238,-2	.346,-2	.495,-2	.437,-2
41	.188,-2	.207,-2	.345,-2	.560,-2	.393,-2
42	.197,-2	.178,-2	.417,-2	.398,-2	.364,-2
43	.230,-2	.227,-2	.519,-2	.303,-2	.315,-2
44	.211,-2	.256,-2	.509,-2	.468,-2	.258,-2
45	.177,-2	.212,-2	.603,-2	.540,-2	.320,-2
46	.209,-2	.262,-2	.522,-2	.495,-2	.306,-2
47	.246,-2	.341,-2	.365,-2	.510,-2	.335,-2
48	.240,-2	.316,-2	.405,-2	.561,-2	.493,-2
49	.242,-2	.246,-2	.383,-2	.448,-2	.642,-2
50	.217,-2	.200,-2	.335,-2	.322,-2	.488,-2
51	.170,-2	.230,-2	.404,-2	.349,-2	.512,-2
52	.234,-2	.256,-2	.405,-2	.351,-2	.608,-2
53	.296,-2	.246,-2	.428,-2	.435,-2	.570,-2
54	.267,-2	.236,-2	.540,-2	.414,-2	.571,-2
55	.189,-2	.201,-2	.488,-2	.348,-2	.726,-2
56	.141,-2	.196,-2	.433,-2	.313,-2	.696,-2
57	.133,-2	.214,-2	.484,-2	.329,-2	.553,-2
58	.158,-2	.214,-2	.466,-2	.321,-2	.648,-2
59	.189,-2	.201,-2	.402,-2	.245,-2	.473,-2
60	.180,-2	.171,-2	.371,-2	.186,-2	.318,-2

Run No. 60; w component

N	Anemometer Position Number 1	2	3	4	5
00	.121,-2	.173,-2	.142,-2	.346,-2	.151,-2
01	.180,-2	.193,-2	.190,-2	.350,-2	.199,-2
02	.243,-2	.173,-2	.270,-2	.298,-2	.228,-2
03	.269,-2	.149,-2	.248,-2	.297,-2	.191,-2
04	.294,-2	.143,-2	.191,-2	.282,-2	.164,-2
05	.297,-2	.142,-2	.233,-2	.265,-2	.229,-2
06	.218,-2	.154,-2	.215,-2	.247,-2	.238,-2
07	.181,-2	.155,-2	.179,-2	.237,-2	.215,-2
08	.275,-2	.183,-2	.194,-2	.238,-2	.227,-2
09	.293,-2	.171,-2	.208,-2	.215,-2	.218,-2
10	.236,-2	.144,-2	.266,-2	.273,-2	.162,-2
11	.221,-2	.158,-2	.275,-2	.321,-2	.189,-2
12	.224,-2	.173,-2	.228,-2	.264,-2	.266,-2
13	.253,-2	.164,-2	.172,-2	.238,-2	.319,-2
14	.263,-2	.162,-2	.186,-2	.247,-2	.257,-2
15	.240,-2	.192,-2	.223,-2	.220,-2	.228,-2
16	.227,-2	.187,-2	.185,-2	.203,-2	.239,-2
17	.241,-2	.187,-2	.160,-2	.215,-2	.214,-2
18	.253,-2	.225,-2	.175,-2	.224,-2	.173,-2
19	.220,-2	.156,-2	.171,-2	.185,-2	.144,-2
20	.205,-2	.130,-2	.178,-2	.203,-2	.175,-2
21	.265,-2	.146,-2	.178,-2	.233,-2	.199,-2
22	.263,-2	.173,-2	.131,-2	.195,-2	.224,-2
23	.228,-2	.157,-2	.125,-2	.185,-2	.225,-2
24	.214,-2	.149,-2	.151,-2	.196,-2	.234,-2
25	.198,-2	.176,-2	.131,-2	.196,-2	.265,-2
26	.176,-2	.166,-2	.134,-2	.170,-2	.208,-2
27	.207,-2	.169,-2	.149,-2	.150,-2	.126,-2
28	.224,-2	.168,-2	.182,-2	.138,-2	.161,-2
29	.168,-2	.157,-2	.186,-2	.116,-2	.276,-2
30	.138,-2	.116,-2	.145,-2	.131,-2	.291,-2
31	.145,-2	.852,-3	.170,-2	.155,-2	.215,-2
32	.177,-2	.911,-3	.186,-2	.167,-2	.155,-2
33	.222,-2	.130,-2	.176,-2	.155,-2	.148,-2
34	.250,-2	.120,-2	.127,-2	.149,-2	.184,-2
35	.207,-2	.121,-2	.116,-2	.159,-2	.169,-2
36	.119,-2	.146,-2	.162,-2	.175,-2	.141,-2
37	.134,-2	.155,-2	.160,-2	.190,-2	.194,-2
38	.205,-2	.154,-2	.101,-2	.242,-2	.224,-2
39	.261,-2	.109,-2	.134,-2	.273,-2	.173,-2
40	.240,-2	.101,-2	.136,-2	.249,-2	.139,-2
41	.180,-2	.142,-2	.120,-2	.184,-2	.129,-2
42	.188,-2	.132,-2	.158,-2	.137,-2	.127,-2
43	.216,-2	.115,-2	.189,-2	.132,-2	.122,-2
44	.199,-2	.129,-2	.187,-2	.172,-2	.137,-2
45	.202,-2	.170,-2	.180,-2	.209,-2	.141,-2
46	.201,-2	.175,-2	.178,-2	.175,-2	.168,-2
47	.169,-2	.141,-2	.163,-2	.244,-2	.174,-2
48	.168,-2	.145,-2	.156,-2	.290,-2	.169,-2
49	.151,-2	.165,-2	.184,-2	.242,-2	.142,-2
50	.127,-2	.164,-2	.214,-2	.184,-2	.186,-2
51	.145,-2	.166,-2	.207,-2	.222,-2	.220,-2
52	.176,-2	.139,-2	.215,-2	.259,-2	.225,-2
53	.242,-2	.120,-2	.274,-2	.226,-2	.236,-2
54	.244,-2	.171,-2	.217,-2	.208,-2	.148,-2
55	.176,-2	.197,-2	.160,-2	.176,-2	.135,-2
56	.149,-2	.172,-2	.160,-2	.146,-2	.197,-2
57	.161,-2	.157,-2	.201,-2	.145,-2	.219,-2
58	.193,-2	.134,-2	.202,-2	.114,-2	.174,-2
59	.217,-2	.845,-3	.149,-2	.926,-3	.156,-2
60	.206,-2	.526,-3	.116,-2	.895,-3	.168,-2

Run No. 61; u component

N	Anemometer Position Number 1	2	3	4	5
00	.155	.152			
01	.191	.184			
02	.187	.184			
03	.133	.132			
04	.102	.996,-1			
05	.718,-1	.713,-1			
06	.566,-1	.544,-1			
07	.375,-1	.397,-1			
08	.319,-1	.370,-1			
09	.323,-1	.309,-1			
10	.255,-1	.259,-1			
11	.170,-1	.229,-1			
12	.160,-1	.199,-1			
13	.186,-1	.198,-1			
14	.192,-1	.188,-1			
15	.147,-1	.161,-1			
16	.997,-2	.128,-1			
17	.120,-1	.126,-1			
18	.140,-1	.126,-1			
19	.130,-1	.134,-1			
20	.120,-1	.156,-1			
21	.116,-1	.120,-1			
22	.106,-1	.845,-2			
23	.107,-1	.109,-1			
24	.920,-2	.948,-2			
25	.806,-2	.614,-2			
26	.953,-2	.578,-2			
27	.984,-2	.617,-2			
28	.884,-2	.707,-2			
29	.661,-2	.609,-2			
30	.596,-2	.598,-2			
31	.692,-2	.646,-2			
32	.573,-2	.705,-2			
33	.471,-2	.850,-2			
34	.517,-2	.751,-2			
35	.471,-2	.535,-2			
36	.465,-2	.614,-2			
37	.633,-2	.567,-2			
38	.765,-2	.430,-2			
39	.569,-2	.384,-2			
40	.418,-2	.473,-2			
41	.324,-2	.338,-2			
42	.289,-2	.247,-2			
43	.325,-2	.380,-2			
44	.464,-2	.486,-2			
45	.458,-2	.512,-2			
46	.414,-2	.553,-2			
47	.414,-2	.598,-2			
48	.454,-2	.478,-2			
49	.463,-2	.423,-2			
50	.434,-2	.338,-2			
51	.378,-2	.378,-2			
52	.282,-2	.473,-2			
53	.216,-2	.408,-2			
54	.210,-2	.322,-2			
55	.212,-2	.417,-2			
56	.205,-2	.548,-2			
57	.282,-2	.589,-2			
58	.378,-2	.533,-2			
59	.295,-2	.323,-2			
60	.222,-2	.250,-2			

Run No. 61; v component

N	Anemometer Position Number 1	2	3	4	5
00	.722	.691			
01	.448	.442			
02	.153	.145			
03	.742,-1	.737,-1			
04	.537,-1	.609,-1			
05	.389,-1	.463,-1			
06	.229,-1	.274,-1			
07	.216,-1	.175,-1			
08	.264,-1	.190,-1			
09	.247,-1	.219,-1			
10	.166,-1	.186,-1			
11	.117,-1	.121,-1			
12	.132,-1	.113,-1			
13	.178,-1	.133,-1			
14	.144,-1	.157,-1			
15	.969,-2	.159,-1			
16	.867,-2	.151,-1			
17	.107,-1	.123,-1			
18	.114,-1	.904,-2			
19	.108,-1	.978,-2			
20	.125,-1	.120,-1			
21	.119,-1	.137,-1			
22	.954,-2	.119,-1			
23	.848,-2	.970,-2			
24	.862,-2	.890,-2			
25	.734,-2	.931,-2			
26	.789,-2	.112,-1			
27	.876,-2	.104,-1			
28	.885,-2	.692,-2			
29	.109,-1	.696,-2			
30	.104,-1	.106,-1			
31	.101,-1	.112,-1			
32	.993,-2	.934,-2			
33	.844,-2	.905,-2			
34	.842,-2	.118,-1			
35	.787,-2	.975,-2			
36	.844,-2	.847,-2			
37	.898,-2	.111,-1			
38	.905,-2	.122,-1			
39	.840,-2	.890,-2			
40	.670,-2	.758,-2			
41	.692,-2	.940,-2			
42	.747,-2	.979,-2			
43	.676,-2	.808,-2			
44	.687,-2	.693,-2			
45	.787,-2	.770,-2			
46	.657,-2	.670,-2			
47	.588,-2	.670,-2			
48	.540,-2	.594,-2			
49	.547,-2	.655,-2			
50	.615,-2	.838,-2			
51	.641,-2	.790,-2			
52	.485,-2	.608,-2			
53	.342,-2	.471,-2			
54	.379,-2	.475,-2			
55	.567,-2	.764,-2			
56	.622,-2	.843,-2			
57	.654,-2	.698,-2			
58	.614,-2	.685,-2			
59	.519,-2	.677,-2			
60	.465,-2	.591,-2			

Run No. 61; w component

N	Anemometer Position Number 1	2	3	4	5
00	.557,-2	.307,-2			
01	.607,-2	.384,-2			
02	.620,-2	.488,-2			
03	.748,-2	.470,-2			
04	.742,-2	.476,-2			
05	.662,-2	.588,-2			
06	.807,-2	.667,-2			
07	.865,-2	.634,-2			
08	.819,-2	.539,-2			
09	.551,-2	.486,-2			
10	.412,-2	.463,-2			
11	.408,-2	.510,-2			
12	.411,-2	.532,-2			
13	.553,-2	.471,-2			
14	.472,-2	.476,-2			
15	.341,-2	.527,-2			
16	.306,-2	.467,-2			
17	.436,-2	.405,-2			
18	.545,-2	.422,-2			
19	.459,-2	.457,-2			
20	.379,-2	.474,-2			
21	.457,-2	.493,-2			
22	.536,-2	.412,-2			
23	.495,-2	.361,-2			
24	.464,-2	.334,-2			
25	.556,-2	.311,-2			
26	.562,-2	.321,-2			
27	.477,-2	.367,-2			
28	.535,-2	.377,-2			
29	.508,-2	.305,-2			
30	.472,-2	.326,-2			
31	.596,-2	.326,-2			
32	.662,-2	.331,-2			
33	.498,-2	.382,-2			
34	.337,-2	.441,-2			
35	.311,-2	.448,-2			
36	.349,-2	.438,-2			
37	.424,-2	.346,-2			
38	.495,-2	.252,-2			
39	.466,-2	.279,-2			
40	.419,-2	.305,-2			
41	.412,-2	.316,-2			
42	.347,-2	.252,-2			
43	.266,-2	.218,-2			
44	.318,-2	.275,-2			
45	.362,-2	.233,-2			
46	.375,-2	.210,-2			
47	.276,-2	.343,-2			
48	.275,-2	.352,-2			
49	.299,-2	.272,-2			
50	.311,-2	.296,-2			
51	.312,-2	.373,-2			
52	.398,-2	.318,-2			
53	.436,-2	.329,-2			
54	.316,-2	.448,-2			
55	.301,-2	.407,-2			
56	.505,-2	.341,-2			
57	.561,-2	.347,-2			
58	.476,-2	.386,-2			
59	.386,-2	.340,-2			
60	.298,-2	.283,-2			

Item No. 121 is Component

Axis-vector Position Number

N	1	2	3	4	5
00	.[illegible]	.210	.[illegible]	.[illegible]	.[illegible]
01	.[illegible]	.[illegible]	.[illegible]	.[illegible]	.[illegible]
02	.[illegible]	.[illegible]	.[illegible]	.[illegible]	.116
03	.[illegible]	.[illegible]-1	.[illegible]	.[illegible]-1	.[illegible]-1
04	.[illegible]	.[illegible]-1	.[illegible]-1	.[illegible]-1	.[illegible]-1
05	.[illegible]-1	.[illegible]-1	.[illegible]-1	.[illegible]-1	.[illegible]-1
06	.[illegible]-1	.[illegible]-1	.[illegible]-1	.[illegible]-1	.[illegible]-1
07	.[illegible]-1	.[illegible]-1	.[illegible]-1	.[illegible]-1	.[illegible]-1
08	.[illegible]-1	.[illegible]-1	.[illegible]-1	.[illegible]-1	.[illegible]-1
09	.[illegible]-1	.[illegible]-1	.[illegible]-1	.[illegible]-1	.[illegible]-1
10	.[illegible]-1	.[illegible]-1	.[illegible]-1	.[illegible]-1	.[illegible]-1
11	.[illegible]-1	.[illegible]-1	.[illegible]-1	.[illegible]-1	.[illegible]-1
12	.[illegible]-1	.[illegible]-1	.[illegible]-1	.[illegible]-1	.[illegible]-1
13	.[illegible]-1	.[illegible]-1	.[illegible]-1	.[illegible]-1	.[illegible]-1
14	.[illegible]-1	.[illegible]-1	.[illegible]-1	.[illegible]-1	.[illegible]-1
15	.[illegible]-1	.[illegible]-1	.[illegible]-1	.[illegible]-1	.[illegible]-1
16	.[illegible]-1	.[illegible]-1	.[illegible]-1	.[illegible]-1	.[illegible]-1
17	.[illegible]-1	.[illegible]-1	.[illegible]-1	.[illegible]-1	.[illegible]-1
18	.[illegible]-1	.[illegible]-1	.[illegible]-1	.[illegible]-1	.[illegible]-1
19	.[illegible]-1	.[illegible]-1	.[illegible]-1	.[illegible]-1	.[illegible]-1
20	.[illegible]-1	.[illegible]-1	.[illegible]-1	.[illegible]-1	.[illegible]-1
21	.[illegible]-1	.[illegible]-1	.[illegible]-1	.[illegible]-1	.[illegible]-1
22	.[illegible]-1	.[illegible]-1	.[illegible]-1	.[illegible]-1	.[illegible]-1
23	.[illegible]-1	.[illegible]-1	.[illegible]-1	.[illegible]-1	.[illegible]-1
24	.[illegible]-1	.[illegible]-1	.[illegible]-1	.[illegible]-1	.[illegible]-1
25	.[illegible]-1	.[illegible]-1	.[illegible]-1	.[illegible]-1	.[illegible]-1
26	.[illegible]-1	.[illegible]-1	.[illegible]-1	.[illegible]-1	.[illegible]-1
27	.[illegible]-1	.[illegible]-1	.[illegible]-1	.[illegible]-1	.[illegible]-1
28	.[illegible]-1	.[illegible]-1	.[illegible]-1	.[illegible]-1	.[illegible]-1
29	.[illegible]-1	.[illegible]-1	.[illegible]-1	.[illegible]-1	.[illegible]-1
30	.[illegible]-1	.[illegible]-1	.[illegible]-1	.[illegible]-1	.[illegible]-1
31	.[illegible]-1	.[illegible]-1	.[illegible]-1	.[illegible]-1	.[illegible]-1
32	.[illegible]-1	.[illegible]-1	.[illegible]-1	.[illegible]-1	.[illegible]-1
33	.[illegible]-1	.[illegible]-1	.[illegible]-1	.[illegible]-1	.[illegible]-1
34	.[illegible]-1	.[illegible]-1	.[illegible]-1	.[illegible]-1	.[illegible]-1
35	.[illegible]-1	.[illegible]-1	.[illegible]-1	.[illegible]-1	.[illegible]-1
36	.[illegible]-1	.[illegible]-1	.[illegible]-1	.[illegible]-1	.[illegible]-1
37	.[illegible]-1	.[illegible]-1	.[illegible]-1	.[illegible]-1	.[illegible]-1
38	.[illegible]-1	.[illegible]-1	.[illegible]-1	.[illegible]-1	.[illegible]-1
39	.[illegible]-1	.[illegible]-1	.[illegible]-1	.[illegible]-1	.[illegible]-1
40	.[illegible]-1	.[illegible]-1	.[illegible]-1	.[illegible]-1	.[illegible]-1
41	.[illegible]-1	.[illegible]-1	.[illegible]-1	.[illegible]-1	.[illegible]-1
42	.[illegible]-1	.[illegible]-1	.[illegible]-1	.[illegible]-1	.[illegible]-1
43	.[illegible]-1	.[illegible]-1	.[illegible]-1	.[illegible]-1	.[illegible]-1
44	.[illegible]-1	.[illegible]-1	.[illegible]-1	.[illegible]-1	.[illegible]-1
45	.[illegible]-1	.[illegible]-1	.[illegible]-1	.[illegible]-1	.[illegible]-1
46	.[illegible]-1	.[illegible]-1	.[illegible]-1	.[illegible]-1	.[illegible]-1
47	.[illegible]-1	.[illegible]-1	.[illegible]-1	.[illegible]-1	.[illegible]-1
48	.[illegible]-1	.[illegible]-1	.[illegible]-1	.[illegible]-1	.[illegible]-1
49	.[illegible]-1	.[illegible]-1	.[illegible]-1	.[illegible]-1	.[illegible]-1
50	.[illegible]-1	.[illegible]-1	.[illegible]-1	.[illegible]-1	.[illegible]-1
51	.[illegible]-1	.[illegible]-1	.[illegible]-1	.[illegible]-1	.[illegible]-1
52	.[illegible]-1	.[illegible]-1	.[illegible]-1	.[illegible]-1	.[illegible]-1
53	.[illegible]-1	.[illegible]-1	.[illegible]-1	.[illegible]-1	.[illegible]-1
54	.[illegible]-1	.[illegible]-1	.[illegible]-1	.[illegible]-1	.[illegible]-1
55	.[illegible]-1	.[illegible]-1	.[illegible]-1	.[illegible]-1	.[illegible]-1
56	.[illegible]-1	.[illegible]-1	.[illegible]-1	.[illegible]-1	.[illegible]-1
57	.[illegible]-1	.[illegible]-1	.[illegible]-1	.[illegible]-1	.[illegible]-1
58	.[illegible]-1	.[illegible]-1	.[illegible]-1	.[illegible]-1	.[illegible]-1
59	.[illegible]-1	.[illegible]-1	.[illegible]-1	.[illegible]-1	.[illegible]-1
60	.[illegible]-1	.[illegible]-1	.[illegible]-1	.[illegible]-1	.[illegible]-1

Form [illegible] (2) V [illegible] Exponent

	Parameter Position Number				
N	1	2	3	4	5
[illegible]	[illegible]	[illegible]	[illegible]	[illegible]	[illegible]

Table [illegible]

Age-sex-specific [illegible]

Run No. (s): u component

Anemometer Position Number

N	1	2	3	4	5
00	.[illegible],-1	.[illegible],-1	.[illegible],-1		.[illegible],-1
01	.[illegible],-1	.[illegible],-1	.[illegible],-1		.[illegible],-1
02	.[illegible],-1	.[illegible],-1	.[illegible],-1		.[illegible],-1
03	.[illegible],-1	.[illegible],-1	.[illegible],-1		.[illegible],-1
04	.[illegible],-1	.[illegible],-1	.[illegible],-1		.[illegible],-1
05	.[illegible],-1	.[illegible],-1	.[illegible],-1		.[illegible],-1
06	.[illegible],-1	.[illegible],-1	.[illegible],-1		.[illegible],-1
07	.[illegible],-1	.[illegible],-1	.[illegible],-1		.[illegible],-1
08	.[illegible],-1	.[illegible],-1	.[illegible],-1		.[illegible],-1
09	.[illegible],-1	.[illegible],-1	.[illegible],-1		.[illegible],-1
10	.[illegible],-1	.[illegible],-1	.[illegible],-1		.[illegible],-1
11	.[illegible],-1	.[illegible],-1	.[illegible],-1		.[illegible],-1
12	.[illegible],-1	.[illegible],-1	.[illegible],-1		.[illegible],-1
13	.[illegible],-1	.[illegible],-1	.[illegible],-1		.[illegible],-1
14	.[illegible],-1	.[illegible],-1	.[illegible],-1		.[illegible],-1
15	.[illegible],-1	.[illegible],-1	.[illegible],-1		.[illegible],-1
16	.[illegible],-1	.[illegible],-1	.[illegible],-1		.[illegible],-1
17	.[illegible],-1	.[illegible],-1	.[illegible],-1		.[illegible],-1
18	.[illegible],-1	.[illegible],-1	.[illegible],-1		.[illegible],-1
19	.[illegible],-1	.[illegible],-1	.[illegible],-1		.[illegible],-1
20	.[illegible],-1	.[illegible],-1	.[illegible],-1		.[illegible],-1
21	.[illegible],-1	.[illegible],-1	.[illegible],-1		.[illegible],-1
22	.[illegible],-1	.[illegible],-1	.[illegible],-1		.[illegible],-1
23	.[illegible],-1	.[illegible],-1	.[illegible],-1		.[illegible],-1
24	.[illegible],-1	.[illegible],-1	.[illegible],-1		.[illegible],-1
25	.[illegible],-1	.[illegible],-1	.[illegible],-1		.[illegible],-1
26	.[illegible],-1	.[illegible],-1	.[illegible],-1		.[illegible],-1
27	.[illegible],-1	.[illegible],-1	.[illegible],-1		.[illegible],-1
28	.[illegible],-1	.[illegible],-1	.[illegible],-1		.[illegible],-1
29	.[illegible],-1	.[illegible],-1	.[illegible],-1		.[illegible],-1
30	.[illegible],-1	.[illegible],-1	.[illegible],-1		.[illegible],-1
31	.[illegible],-1	.[illegible],-1	.[illegible],-1		.[illegible],-1
32	.[illegible],-1	.[illegible],-1	.[illegible],-1		.[illegible],-1
33	.[illegible],-1	.[illegible],-1	.[illegible],-1		.[illegible],-1
34	.[illegible],-1	.[illegible],-1	.[illegible],-1		.[illegible],-1
35	.[illegible],-1	.[illegible],-1	.[illegible],-1		.[illegible],-1
36	.[illegible],-1	.[illegible],-1	.[illegible],-1		.[illegible],-1
37	.[illegible],-1	.[illegible],-1	.[illegible],-1		.[illegible],-1
38	.[illegible],-1	.[illegible],-1	.[illegible],-1		.[illegible],-1
39	.[illegible],-1	.[illegible],-1	.[illegible],-1		.[illegible],-1
40	.[illegible],-1	.[illegible],-1	.[illegible],-1		.[illegible],-1
41	.[illegible],-1	.[illegible],-1	.[illegible],-1		.[illegible],-1
42	.[illegible],-1	.[illegible],-1	.[illegible],-1		.[illegible],-1
43	.[illegible],-1	.[illegible],-1	.[illegible],-1		.[illegible],-1
44	.[illegible],-1	.[illegible],-1	.[illegible],-1		.[illegible],-1
45	.[illegible],-1	.[illegible],-1	.[illegible],-1		.[illegible],-1
46	.[illegible],-1	.[illegible],-1	.[illegible],-1		.[illegible],-1
47	.[illegible],-1	.[illegible],-1	.[illegible],-1		.[illegible],-1
48	.[illegible],-1	.[illegible],-1	.[illegible],-1		.[illegible],-1
49	.[illegible],-1	.[illegible],-1	.[illegible],-1		.[illegible],-1
50	.[illegible],-1	.[illegible],-1	.[illegible],-1		.[illegible],-1
51	.[illegible],-1	.[illegible],-1	.[illegible],-1		.[illegible],-1
52	.[illegible],-1	.[illegible],-1	.[illegible],-1		.[illegible],-1
53	.[illegible],-1	.[illegible],-1	.[illegible],-1		.[illegible],-1
54	.[illegible],-1	.[illegible],-1	.[illegible],-1		.[illegible],-1
55	.[illegible],-1	.[illegible],-1	.[illegible],-1		.[illegible],-1
56	.[illegible],-1	.[illegible],-1	.[illegible],-1		.[illegible],-1
57	.[illegible],-1	.[illegible],-1	.[illegible],-1		.[illegible],-1
58	.[illegible],-1	.[illegible],-1	.[illegible],-1		.[illegible],-1
59	.[illegible],-1	.[illegible],-1	.[illegible],-1		.[illegible],-1
60	.[illegible],-1	.[illegible],-1	.[illegible],-1		.[illegible],-1
61	.[illegible],-1	.[illegible],-1	.[illegible],-1		.[illegible],-1
62	.[illegible],-1	.[illegible],-1	.[illegible],-1		.[illegible],-1
63	.[illegible],-1	.[illegible],-1	.[illegible],-1		.[illegible],-1
64	.[illegible],-1	.[illegible],-1	.[illegible],-1		.[illegible],-1
65	.[illegible],-1	.[illegible],-1	.[illegible],-1		.[illegible],-1
66	.[illegible],-1	.[illegible],-1	.[illegible],-1		.[illegible],-1
67	.[illegible],-1	.[illegible],-1	.[illegible],-1		.[illegible],-1
68	.[illegible],-1	.[illegible],-1	.[illegible],-1		.[illegible],-1
69	.[illegible],-1	.[illegible],-1	.[illegible],-1		.[illegible],-1
70	.[illegible],-1	.[illegible],-1	.[illegible],-1		.[illegible],-1
71	.[illegible],-1	.[illegible],-1	.[illegible],-1		.[illegible],-1
72	.[illegible],-1	.[illegible],-1	.[illegible],-1		.[illegible],-1
73	.[illegible],-1	.[illegible],-1	.[illegible],-1		.[illegible],-1
74	.[illegible],-1	.[illegible],-1	.[illegible],-1		.[illegible],-1
75	.[illegible],-1	.[illegible],-1	.[illegible],-1		.[illegible],-1
76	.[illegible],-1	.[illegible],-1	.[illegible],-1		.[illegible],-1
77	.[illegible],-1	.[illegible],-1	.[illegible],-1		.[illegible],-1
78	.[illegible],-1	.[illegible],-1	.[illegible],-1		.[illegible],-1
79	.[illegible],-1	.[illegible],-1	.[illegible],-1		.[illegible],-1
80	.[illegible],-1	.[illegible],-1	.[illegible],-1		.[illegible],-1
81	.[illegible],-1	.[illegible],-1	.[illegible],-1		.[illegible],-1
82	.[illegible],-1	.[illegible],-1	.[illegible],-1		.[illegible],-1
83	.[illegible],-1	.[illegible],-1	.[illegible],-1		.[illegible],-1
84	.[illegible],-1	.[illegible],-1	.[illegible],-1		.[illegible],-1
85	.[illegible],-1	.[illegible],-1	.[illegible],-1		.[illegible],-1
86	.[illegible],-1	.[illegible],-1	.[illegible],-1		.[illegible],-1
87	.[illegible],-1	.[illegible],-1	.[illegible],-1		.[illegible],-1
88	.[illegible],-1	.[illegible],-1	.[illegible],-1		.[illegible],-1
89	.[illegible],-1	.[illegible],-1	.[illegible],-1		.[illegible],-1
90	.[illegible],-1	.[illegible],-1	.[illegible],-1		.[illegible],-1
91	.[illegible],-1	.[illegible],-1	.[illegible],-1		.[illegible],-1
92	.[illegible],-1	.[illegible],-1	.[illegible],-1		.[illegible],-1
93	.[illegible],-1	.[illegible],-1	.[illegible],-1		.[illegible],-1
94	.[illegible],-1	.[illegible],-1	.[illegible],-1		.[illegible],-1
95	.[illegible],-1	.[illegible],-1	.[illegible],-1		.[illegible],-1
96	.[illegible],-1	.[illegible],-1	.[illegible],-1		.[illegible],-1
97	.[illegible],-1	.[illegible],-1	.[illegible],-1		.[illegible],-1
98	.[illegible],-1	.[illegible],-1	.[illegible],-1		.[illegible],-1
99	.[illegible],-1	.[illegible],-1	.[illegible],-1		.[illegible],-1
100	.[illegible],-1	.[illegible],-1	.[illegible],-1		.[illegible],-1

Run No. 65: v component

N	Anemometer Position Number				
	1	2	3	4	5
00	.[illegible],-1	.[illegible],-1	.[illegible],-1		.[illegible],-1
01	.[illegible],-1	.[illegible],-1	.[illegible],-1		.[illegible],-1
02	.[illegible],-1	.[illegible],-1	.[illegible],-1		.[illegible],-1
03	.[illegible],-1	.[illegible],-1	.[illegible],-1		.[illegible],-1
04	.[illegible],-1	.[illegible],-1	.[illegible],-1		.[illegible],-1
05	.[illegible],-1	.[illegible],-1	.[illegible],-1		.[illegible],-1
06	.[illegible],-1	.[illegible],-1	.[illegible],-1		.[illegible],-1
07	.[illegible],-1	.[illegible],-1	.[illegible],-1		.[illegible],-1
08	.[illegible],-1	.[illegible],-1	.[illegible],-1		.[illegible],-1
09	.[illegible],-1	.[illegible],-1	.[illegible],-1		.[illegible],-1
10	.[illegible],-1	.[illegible],-1	.[illegible],-1		.[illegible],-1
11	.[illegible],-1	.[illegible],-1	.[illegible],-1		.[illegible],-1
12	.[illegible],-1	.[illegible],-1	.[illegible],-1		.[illegible],-1
13	.[illegible],-1	.[illegible],-1	.[illegible],-1		.[illegible],-1
14	.[illegible],-1	.[illegible],-1	.[illegible],-1		.[illegible],-1
15	.[illegible],-1	.[illegible],-1	.[illegible],-1		.[illegible],-1
16	.[illegible],-1	.[illegible],-1	.[illegible],-1		.[illegible],-1
17	.[illegible],-1	.[illegible],-1	.[illegible],-1		.[illegible],-1
18	.[illegible],-1	.[illegible],-1	.[illegible],-1		.[illegible],-1
19	.[illegible],-1	.[illegible],-1	.[illegible],-1		.[illegible],-1
20	.[illegible],-1	.[illegible],-1	.[illegible],-1		.[illegible],-1
21	.[illegible],-1	.[illegible],-1	.[illegible],-1		.[illegible],-1
22	.[illegible],-1	.[illegible],-1	.[illegible],-1		.[illegible],-1
23	.[illegible],-1	.[illegible],-1	.[illegible],-1		.[illegible],-1
24	.[illegible],-1	.[illegible],-1	.[illegible],-1		.[illegible],-1
25	.[illegible],-1	.[illegible],-1	.[illegible],-1		.[illegible],-1
26	.[illegible],-1	.[illegible],-1	.[illegible],-1		.[illegible],-1
27	.[illegible],-1	.[illegible],-1	.[illegible],-1		.[illegible],-1
28	.[illegible],-1	.[illegible],-1	.[illegible],-1		.[illegible],-1
29	.[illegible],-1	.[illegible],-1	.[illegible],-1		.[illegible],-1
30	.[illegible],-1	.[illegible],-1	.[illegible],-1		.[illegible],-1
31	.[illegible],-1	.[illegible],-1	.[illegible],-1		.[illegible],-1
32	.[illegible],-1	.[illegible],-1	.[illegible],-1		.[illegible],-1
33	.[illegible],-1	.[illegible],-1	.[illegible],-1		.[illegible],-1
34	.[illegible],-1	.[illegible],-1	.[illegible],-1		.[illegible],-1
35	.[illegible],-1	.[illegible],-1	.[illegible],-1		.[illegible],-1
36	.[illegible],-1	.[illegible],-1	.[illegible],-1		.[illegible],-1
37	.[illegible],-1	.[illegible],-1	.[illegible],-1		.[illegible],-1
38	.[illegible],-1	.[illegible],-1	.[illegible],-1		.[illegible],-1
39	.[illegible],-1	.[illegible],-1	.[illegible],-1		.[illegible],-1
40	.[illegible],-1	.[illegible],-1	.[illegible],-1		.[illegible],-1
41	.[illegible],-1	.[illegible],-1	.[illegible],-1		.[illegible],-1
42	.[illegible],-1	.[illegible],-1	.[illegible],-1		.[illegible],-1
43	.[illegible],-1	.[illegible],-1	.[illegible],-1		.[illegible],-1
44	.[illegible],-1	.[illegible],-1	.[illegible],-1		.[illegible],-1
45	.[illegible],-1	.[illegible],-1	.[illegible],-1		.[illegible],-1
46	.[illegible],-1	.[illegible],-1	.[illegible],-1		.[illegible],-1
47	.[illegible],-1	.[illegible],-1	.[illegible],-1		.[illegible],-1
48	.[illegible],-1	.[illegible],-1	.[illegible],-1		.[illegible],-1
49	.[illegible],-1	.[illegible],-1	.[illegible],-1		.[illegible],-1
50	.[illegible],-1	.[illegible],-1	.[illegible],-1		.[illegible],-1
51	.[illegible],-1	.[illegible],-1	.[illegible],-1		.[illegible],-1
52	.[illegible],-1	.[illegible],-1	.[illegible],-1		.[illegible],-1
53	.[illegible],-1	.[illegible],-1	.[illegible],-1		.[illegible],-1
54	.[illegible],-1	.[illegible],-1	.[illegible],-1		.[illegible],-1
55	.[illegible],-1	.[illegible],-1	.[illegible],-1		.[illegible],-1
56	.[illegible],-1	.[illegible],-1	.[illegible],-1		.[illegible],-1
57	.[illegible],-1	.[illegible],-1	.[illegible],-1		.[illegible],-1
58	.[illegible],-1	.[illegible],-1	.[illegible],-1		.[illegible],-1
59	.[illegible],-1	.[illegible],-1	.[illegible],-1		.[illegible],-1
60	.[illegible],-1	.[illegible],-1	.[illegible],-1		.[illegible],-1

Run No. 65; w component

N	Anemometer Position Number 1	2	3	4	5
00	.206,-2	.150,-2	.170,-2		.990,-3
01	.310,-2	.190,-2	.222,-2		.108,-2
02	.359,-2	.206,-2	.206,-2		.134,-2
03	.427,-2	.210,-2	.161,-2		.157,-2
04	.373,-2	.217,-2	.120,-2		.171,-2
05	.238,-2	.188,-2	.120,-2		.161,-2
06	.145,-2	.160,-2	.151,-2		.144,-2
07	.190,-2	.176,-2	.219,-2		.129,-2
08	.345,-2	.226,-2	.245,-2		.135,-2
09	.344,-2	.238,-2	.214,-2		.173,-2
10	.271,-2	.226,-2	.198,-2		.222,-2
11	.260,-2	.217,-2	.168,-2		.236,-2
12	.244,-2	.199,-2	.159,-2		.183,-2
13	.212,-2	.199,-2	.141,-2		.123,-2
14	.272,-2	.182,-2	.133,-2		.120,-2
15	.256,-2	.164,-2	.133,-2		.144,-2
16	.221,-2	.168,-2	.154,-2		.162,-2
17	.180,-2	.137,-2	.155,-2		.162,-2
18	.151,-2	.166,-2	.132,-2		.124,-2
19	.205,-2	.152,-2	.127,-2		.118,-2
20	.171,-2	.174,-2	.148,-2		.134,-2
21	.165,-2	.169,-2	.160,-2		.142,-2
22	.234,-2	.145,-2	.136,-2		.107,-2
23	.227,-2	.167,-2	.143,-2		.936,-3
24	.213,-2	.198,-2	.165,-2		.975,-3
25	.221,-2	.194,-2	.150,-2		.118,-2
26	.195,-2	.234,-2	.138,-2		.139,-2
27	.185,-2	.234,-2	.111,-2		.130,-2
28	.200,-2	.182,-2	.118,-2		.126,-2
29	.178,-2	.187,-2	.108,-2		.137,-2
30	.232,-2	.147,-2	.995,-3		.164,-2
31	.305,-2	.141,-2	.124,-2		.193,-2
32	.296,-2	.179,-2	.223,-2		.171,-2
33	.229,-2	.155,-2	.241,-2		.156,-2
34	.236,-2	.122,-2	.167,-2		.138,-2
35	.248,-2	.137,-2	.189,-2		.119,-2
36	.280,-2	.131,-2	.200,-2		.145,-2
37	.256,-2	.141,-2	.130,-2		.206,-2
38	.258,-2	.230,-2	.107,-2		.176,-2
39	.260,-2	.286,-2	.128,-2		.129,-2
40	.216,-2	.219,-2	.140,-2		.141,-2
41	.176,-2	.217,-2	.116,-2		.149,-2
42	.157,-2	.225,-2	.950,-3		.158,-2
43	.165,-2	.180,-2	.901,-3		.159,-2
44	.154,-2	.128,-2	.950,-3		.168,-2
45	.122,-2	.106,-2	.141,-2		.124,-2
46	.126,-2	.150,-2	.175,-2		.104,-2
47	.165,-2	.170,-2	.165,-2		.886,-3
48	.169,-2	.190,-2	.121,-2		.105,-2
49	.227,-2	.194,-2	.121,-2		.116,-2
50	.300,-2	.173,-2	.154,-2		.120,-2
51	.332,-2	.111,-2	.170,-2		.114,-2
52	.291,-2	.129,-2	.174,-2		.955,-3
53	.221,-2	.167,-2	.142,-2		.105,-2
54	.249,-2	.158,-2	.115,-2		.159,-2
55	.278,-2	.129,-2	.943,-3		.119,-2
56	.265,-2	.164,-2	.886,-3		.770,-3
57	.215,-2	.201,-2	.878,-3		.757,-3
58	.156,-2	.203,-2	.991,-3		.918,-3
59	.129,-2	.164,-2	.102,-2		.946,-3
60	.125,-2	.120,-2	.912,-3		.830,-3

Run No. 661 u component

	Anemometer Position Number				
N	1	2	3	4	5
00	.196,-1	.120,-1	.105,-1	.235,-1	.179,-1
01	.181,-1	.101,-1	.749,-2	.208,-1	.152,-1
02	.199,-1	.816,-2	.519,-2	.158,-1	.148,-1
03	.118,-1	.756,-2	.754,-2	.163,-1	.160,-1
04	.974,-2	.919,-2	.998,-2	.175,-1	.183,-1
05	.944,-2	.869,-2	.187,-2	.103,-1	.150,-1
06	.864,-2	.737,-2	.661,-2	.109,-1	.134,-1
07	.621,-2	.486,-2	.647,-2	.141,-1	.104,-1
08	.566,-2	.477,-2	.452,-2	.131,-1	.633,-2
09	.658,-2	.556,-2	.611,-2	.945,-2	.687,-2
10	.680,-2	.502,-2	.640,-2	.958,-2	.115,-1
11	.453,-2	.440,-2	.518,-2	.815,-2	.111,-1
12	.885,-2	.401,-2	.344,-2	.639,-2	.648,-2
13	.250,-2	.378,-2	.556,-2	.589,-2	.696,-2
14	.864,-2	.301,-2	.397,-2	.677,-2	.710,-2
15	.509,-2	.319,-2	.416,-2	.760,-2	.604,-2
16	.519,-2	.326,-2	.381,-2	.446,-2	.551,-2
17	.351,-2	.397,-2	.630,-2	.519,-2	.479,-2
18	.589,-2	.345,-2	.840,-2	.569,-2	.501,-2
19	.355,-2	.350,-2	.847,-2	.517,-2	.550,-2
20	.154,-2	.269,-2	.176,-2	.257,-2	.405,-2
21	.147,-2	.245,-2	.240,-2	.410,-2	.892,-2
22	.146,-2	.176,-2	.282,-2	.531,-2	.216,-2
23	.120,-2	.157,-2	.206,-2	.340,-2	.310,-2
24	.117,-2	.159,-2	.157,-2	.354,-2	.355,-2
25	.115,-2	.168,-2	.162,-2	.304,-2	.259,-2
26	.134,-2	.181,-2	.145,-2	.217,-2	.389,-2
27	.184,-2	.155,-2	.150,-2	.228,-2	.410,-2
28	.950,-3	.155,-2	.160,-2	.240,-2	.337,-2
29	.850,-3	.156,-2	.155,-2	.246,-2	.315,-2
30	.615,-3	.161,-2	.150,-2	.221,-2	.340,-2
31	.720,-3	.181,-2	.119,-2	.176,-2	.310,-2
32	.644,-3	.119,-2	.850,-3	.923,-3	.240,-2
33	.765,-3	.141,-2	.104,-2	.980,-3	.210,-2
34	.707,-3	.134,-2	.114,-2	.500,-3	.272,-2
35	.700,-3	.148,-2	.949,-3	.304,-3	.267,-2
36	.700,-3	.100,-2	.711,-3	.251,-3	.308,-2
37	.558,-3	.809,-3	.617,-3	.199,-3	.295,-2
38	.540,-3	.782,-3	.609,-3	.161,-3	.234,-2
39	.510,-3	.707,-3	.655,-3	.105,-2	.215,-2
40	.536,-3	.664,-3	.695,-3	.221,-3	.155,-2
41	.569,-3	.115,-2	.657,-3	.176,-3	.120,-2
42	.447,-3	.951,-3	.578,-3	.211,-3	.127,-2
43	.410,-3	.776,-3	.540,-3	.209,-3	.186,-2
44	.486,-3	.598,-3	.711,-3	.152,-2	.112,-2
45	.440,-3	.690,-3	.579,-3	.105,-2	.125,-2
46	.491,-3	.762,-3	.677,-3	.129,-2	.140,-2
47	.529,-3	.574,-3	.605,-3	.190,-2	.125,-2
48	.425,-3	.580,-3	.458,-3	.215,-2	.956,-3
49	.426,-3	.705,-3	.406,-3	.177,-2	.940,-3
50	.580,-3	.100,-2	.444,-3	.190,-2	.122,-2
51	.533,-3	.907,-3	.444,-3	.166,-2	.141,-2
52	.287,-3	.655,-3	.454,-3	.117,-2	.146,-2
53	.500,-3	.640,-3	.500,-3	.134,-2	.117,-2
54	.429,-3	.724,-3	.432,-3	.192,-2	.132,-2
55	.344,-3	.809,-3	.408,-3	.267,-2	.146,-2
56	.217,-3	.754,-3	.455,-3	.254,-2	.134,-2
57	.286,-3	.675,-3	.415,-3	.184,-2	.105,-2
58	.478,-3	.603,-3	.346,-3	.171,-2	.105,-2
59	.468,-3	.371,-3	.393,-3	.147,-2	.112,-2
60	.311,-3	.225,-3	.587,-3	.111,-2	.870,-3

Run No. 66; v component

	Anemometer Position Number				
N	1	2	3	4	5
00	.465,-1	.557,-1	.797,-1	.166	.512,-1
01	.223,-1	.288,-1	.468,-1	.950,-1	.400,-1
02	.247,-2	.604,-2	.130,-1	.337,-1	.317,-1
03	.309,-2	.547,-2	.150,-1	.237,-1	.210,-1
04	.330,-2	.575,-2	.120,-1	.205,-1	.190,-1
05	.312,-2	.610,-2	.114,-1	.220,-1	.250,-1
06	.368,-2	.694,-2	.112,-1	.214,-1	.247,-1
07	.466,-2	.750,-2	.100,-1	.215,-1	.278,-1
08	.515,-2	.625,-2	.102,-1	.206,-1	.255,-1
09	.600,-2	.777,-2	.115,-1	.147,-1	.194,-1
10	.523,-2	.196,-1	.165,-1	.117,-1	.200,-1
11	.475,-2	.107,-1	.161,-1	.119,-1	.241,-1
12	.426,-2	.659,-2	.129,-1	.121,-1	.196,-1
13	.640,-2	.453,-2	.130,-1	.201,-2	.110,-1
14	.600,-2	.603,-2	.113,-1	.540,-2	.160,-1
15	.525,-2	.461,-2	.876,-2	.655,-2	.209,-1
16	.550,-2	.446,-2	.109,-1	.791,-2	.176,-1
17	.516,-2	.540,-2	.111,-1	.718,-2	.154,-1
18	.471,-2	.652,-2	.103,-1	.666,-2	.142,-1
19	.446,-2	.599,-2	.775,-2	.659,-2	.191,-1
20	.545,-2	.344,-2	.867,-2	.520,-2	.145,-1
21	.475,-2	.294,-2	.807,-2	.595,-2	.104,-1
22	.400,-2	.375,-2	.507,-2	.646,-2	.907,-2
23	.353,-2	.401,-2	.527,-2	.761,-2	.115,-1
24	.369,-2	.467,-2	.452,-2	.601,-2	.099,-2
25	.389,-2	.402,-2	.541,-2	.550,-2	.791,-2
26	.490,-2	.546,-2	.345,-2	.295,-2	.755,-2
27	.365,-2	.354,-2	.618,-2	.521,-2	.751,-2
28	.351,-2	.453,-2	.501,-2	.649,-2	.250,-2
29	.367,-2	.504,-2	.474,-2	.511,-2	.791,-2
30	.391,-2	.440,-2	.399,-2	.475,-2	.231,-2
31	.350,-2	.391,-2	.399,-2	.446,-2	.408,-2
32	.390,-2	.382,-2	.402,-2	.444,-2	.305,-2
33	.318,-2	.393,-2	.518,-2	.534,-2	.492,-2
34	.387,-2	.399,-2	.315,-2	.391,-2	.407,-2
35	.270,-2	.491,-2	.275,-2	.351,-2	.525,-2
36	.210,-2	.327,-2	.265,-2	.515,-2	.460,-2
37	.262,-2	.364,-2	.210,-2	.340,-2	.384,-2
38	.299,-2	.275,-2	.254,-2	.333,-2	.492,-2
39	.315,-2	.190,-2	.269,-2	.252,-2	.477,-2
40	.251,-2	.260,-2	.247,-2	.216,-2	.315,-2
41	.218,-2	.165,-2	.216,-2	.242,-2	.224,-2
42	.240,-2	.375,-2	.210,-2	.307,-2	.287,-2
43	.332,-2	.406,-2	.215,-2	.215,-2	.302,-2
44	.305,-2	.437,-2	.210,-2	.204,-2	.339,-2
45	.255,-2	.372,-2	.307,-2	.231,-2	.360,-2
46	.230,-2	.251,-2	.306,-2	.241,-2	.374,-2
47	.324,-2	.231,-2	.214,-2	.200,-2	.304,-2
48	.248,-2	.250,-2	.195,-2	.234,-2	.341,-2
49	.257,-2	.261,-2	.244,-2	.300,-2	.249,-2
50	.277,-2	.210,-2	.267,-2	.253,-2	.256,-2
51	.233,-2	.167,-2	.204,-2	.167,-2	.339,-2
52	.275,-2	.218,-2	.149,-2	.227,-2	.319,-2
53	.264,-2	.270,-2	.218,-2	.315,-2	.316,-2
54	.256,-2	.269,-2	.234,-2	.270,-2	.344,-2
55	.200,-2	.268,-2	.167,-2	.217,-2	.339,-2
56	.212,-2	.202,-2	.157,-2	.248,-2	.267,-2
57	.244,-2	.325,-2	.239,-2	.239,-2	.265,-2
58	.290,-2	.278,-2	.212,-2	.215,-2	.302,-2
59	.250,-2	.253,-2	.148,-2	.190,-2	.351,-2
60	.198,-2	.145,-2	.118,-2	.170,-2	.325,-2

Run No. 66; w component

N	Anemometer Position Number 1	2	3	4	5
00	.132,-2	.506,-3	.652,-3	.109,-2	.541,-3
01	.137,-2	.625,-3	.752,-3	.129,-2	.581,-3
02	.181,-2	.727,-3	.729,-3	.128,-2	.704,-3
03	.170,-2	.726,-3	.792,-3	.877,-3	.786,-3
04	.110,-2	.837,-3	.100,-2	.697,-3	.793,-3
05	.131,-2	.647,-3	.107,-2	.745,-3	.698,-3
06	.145,-2	.689,-3	.793,-3	.740,-3	.567,-3
07	.154,-2	.588,-3	.666,-3	.755,-3	.519,-3
08	.154,-2	.663,-3	.548,-3	.760,-3	.752,-3
09	.118,-2	.510,-3	.511,-3	.612,-3	.871,-3
10	.145,-2	.420,-3	.519,-3	.527,-3	.874,-3
11	.159,-2	.483,-3	.700,-3	.594,-3	.771,-3
12	.127,-2	.643,-3	.703,-3	.445,-3	.655,-3
13	.119,-2	.664,-3	.603,-3	.536,-3	.646,-3
14	.104,-2	.596,-3	.431,-3	.483,-3	.750,-3
15	.950,-3	.514,-3	.481,-3	.504,-3	.669,-3
16	.119,-2	.506,-3	.570,-3	.551,-3	.708,-3
17	.134,-2	.548,-3	.592,-3	.609,-3	.576,-3
18	.114,-2	.565,-3	.534,-3	.594,-3	.523,-3
19	.110,-2	.576,-3	.547,-3	.405,-3	.632,-3
20	.140,-2	.542,-3	.543,-3	.435,-3	.671,-3
21	.137,-2	.454,-3	.607,-3	.471,-3	.655,-3
22	.993,-3	.455,-3	.630,-3	.450,-3	.658,-3
23	.978,-3	.482,-3	.536,-3	.541,-3	.648,-3
24	.120,-2	.496,-3	.574,-3	.746,-3	.606,-3
25	.129,-2	.647,-3	.760,-3	.613,-3	.561,-3
26	.124,-2	.755,-3	.817,-3	.646,-3	.617,-3
27	.105,-2	.668,-3	.714,-3	.451,-3	.572,-3
28	.809,-3	.519,-3	.722,-3	.556,-3	.641,-3
29	.874,-3	.490,-3	.634,-3	.527,-3	.629,-3
30	.831,-3	.608,-3	.560,-3	.457,-3	.459,-3
31	.666,-3	.553,-3	.657,-3	.494,-3	.507,-3
32	.757,-3	.591,-3	.635,-3	.571,-3	.605,-3
33	.892,-3	.674,-3	.666,-3	.507,-3	.476,-3
34	.106,-2	.649,-3	.727,-3	.699,-3	.417,-3
35	.100,-2	.795,-3	.609,-3	.466,-3	.467,-3
36	.754,-3	.618,-3	.547,-3	.492,-3	.464,-3
37	.917,-3	.465,-3	.505,-3	.446,-3	.718,-3
38	.110,-2	.497,-3	.570,-3	.405,-3	.465,-3
39	.971,-3	.542,-3	.560,-3	.503,-3	.653,-3
40	.807,-3	.769,-3	.511,-3	.346,-3	.549,-3
41	.890,-3	.805,-3	.515,-3	.376,-3	.680,-3
42	.934,-3	.678,-3	.492,-3	.508,-3	.412,-3
43	.100,-2	.651,-3	.692,-3	.575,-3	.591,-3
44	.666,-3	.615,-3	.909,-3	.505,-3	.404,-3
45	.847,-3	.477,-3	.705,-3	.508,-3	.447,-3
46	.115,-2	.479,-3	.672,-3	.425,-3	.463,-3
47	.120,-2	.635,-3	.774,-3	.503,-3	.470,-3
48	.118,-2	.719,-3	.459,-3	.709,-3	.546,-3
49	.150,-2	.854,-3	.527,-3	.629,-3	.556,-3
50	.141,-2	.751,-3	.785,-3	.502,-3	.656,-3
51	.135,-2	.519,-3	.661,-3	.461,-3	.696,-3
52	.147,-2	.568,-3	.407,-3	.360,-3	.585,-3
53	.159,-2	.601,-3	.411,-3	.481,-3	.314,-3
54	.116,-2	.519,-3	.519,-3	.471,-3	.488,-3
55	.120,-2	.593,-3	.579,-3	.460,-3	.480,-3
56	.119,-2	.613,-3	.755,-3	.562,-3	.362,-3
57	.110,-2	.586,-3	.814,-3	.525,-3	.470,-3
58	.116,-2	.515,-3	.604,-3	.508,-3	.611,-3
59	.792,-3	.411,-3	.512,-3	.547,-3	.482,-3
60	.549,-3	.293,-3	.205,-3	.327,-3	.343,-3

Run No. 67; u component

N	Anemometer Position Number 1	2	3	4	5
00	.[illegible],-1	.[illegible],-1	.147	.126	.627,-1
01	.119	.117	.105	.105	.605,-1
02	.144	.121	.[illegible],-1	.779,-1	.596,-1
03	.112	.[illegible],-1	.[illegible],-1	.[illegible],-1	.557,-1
04	.[illegible],-1	.[illegible],-1	.[illegible],-1	.[illegible],-1	.454,-1
05	.[illegible],-1	.[illegible],-1	.[illegible],-1	.460,-1	.[illegible],-1
06	.[illegible],-1	.[illegible],-1	.[illegible],-1	.[illegible],-1	.[illegible],-1
07	.[illegible],-1	.[illegible],-1	.[illegible],-1	.[illegible],-1	.[illegible],-1
08	.[illegible],-1	.[illegible],-1	.[illegible],-1	.[illegible],-1	.[illegible],-1
09	.[illegible],-1	.[illegible],-1	.[illegible],-1	.[illegible],-1	.[illegible],-1
10	.[illegible],-1	.[illegible],-1	.[illegible],-1	.[illegible],-1	.[illegible],-1
11	.[illegible],-1	.[illegible],-1	.[illegible],-1	.[illegible],-1	.[illegible],-1
12	.[illegible],-1	.[illegible],-1	.[illegible],-1	.[illegible],-1	.[illegible],-1
13	.[illegible],-1	.[illegible],-1	.[illegible],-1	.[illegible],-1	.[illegible],-1
14	.[illegible],-1	.[illegible],-1	.[illegible],-1	.[illegible],-1	.[illegible],-1
15	.[illegible],-1	.[illegible],-1	.[illegible],-1	.[illegible],-1	.[illegible],-1
16	.[illegible],-1	.[illegible],-1	.[illegible],-1	.[illegible],-1	.[illegible],-1
17	.[illegible],-1	.[illegible],-1	.[illegible],-1	.[illegible],-1	.[illegible],-1
18	.[illegible],-1	.[illegible],-1	.[illegible],-2	.[illegible],-1	.[illegible],-1
19	.[illegible],-1	.[illegible],-2	.[illegible],-2	.[illegible],-1	.[illegible],-1
20	.[illegible],-1	.[illegible],-2	.[illegible],-1	.[illegible],-1	.[illegible],-1
21	.[illegible],-1	.[illegible],-1	.[illegible],-2	.[illegible],-1	.[illegible],-1
22	.[illegible],-1	.[illegible],-1	.[illegible],-2	.[illegible],-1	.[illegible],-1
23	.[illegible],-1	.[illegible],-2	.[illegible],-2	.[illegible],-1	.[illegible],-1
24	.[illegible],-2	.[illegible],-2	.[illegible],-2	.[illegible],-1	.[illegible],-1
25	.[illegible],-2	.[illegible],-2	.[illegible],-2	.[illegible],-2	.[illegible],-2
26	.[illegible],-2	.[illegible],-2	.[illegible],-2	.[illegible],-2	.[illegible],-2
27	.[illegible],-1	.[illegible],-2	.[illegible],-2	.[illegible],-2	.[illegible],-2
28	.[illegible],-2	.[illegible],-2	.[illegible],-1	.[illegible],-2	.[illegible],-2
29	.[illegible],-2	.[illegible],-2	.[illegible],-2	.[illegible],-2	.[illegible],-2
30	.[illegible],-2	.[illegible],-2	.[illegible],-2	.[illegible],-2	.[illegible],-2
31	.[illegible],-2	.[illegible],-2	.[illegible],-2	.[illegible],-2	.[illegible],-2
32	.[illegible],-2	.[illegible],-2	.[illegible],-2	.[illegible],-2	.[illegible],-2
33	.[illegible],-2	.[illegible],-2	.[illegible],-2	.[illegible],-2	.[illegible],-2
34	.[illegible],-2	.[illegible],-2	.[illegible],-2	.[illegible],-2	.[illegible],-2
35	.[illegible],-2	.[illegible],-2	.[illegible],-2	.[illegible],-2	.[illegible],-2
36	.[illegible],-2	.[illegible],-2	.[illegible],-2	.[illegible],-2	.[illegible],-2
37	.[illegible],-2	.[illegible],-2	.[illegible],-2	.[illegible],-2	.[illegible],-2
38	.[illegible],-2	.[illegible],-2	.[illegible],-2	.[illegible],-2	.[illegible],-2
39	.[illegible],-2	.[illegible],-2	.[illegible],-2	.[illegible],-2	.[illegible],-2
40	.[illegible],-2	.[illegible],-2	.[illegible],-2	.[illegible],-2	.[illegible],-2
41	.[illegible],-2	.[illegible],-2	.[illegible],-2	.[illegible],-2	.[illegible],-2
42	.[illegible],-2	.[illegible],-2	.[illegible],-2	.[illegible],-2	.[illegible],-2
43	.[illegible],-2	.[illegible],-2	.[illegible],-2	.[illegible],-2	.[illegible],-2
44	.[illegible],-2	.[illegible],-2	.[illegible],-2	.[illegible],-2	.[illegible],-2
45	.[illegible],-2	.[illegible],-2	.[illegible],-2	.[illegible],-2	.[illegible],-2
46	.[illegible],-2	.[illegible],-2	.[illegible],-2	.[illegible],-2	.[illegible],-2
47	.[illegible],-2	.[illegible],-2	.[illegible],-2	.[illegible],-2	.[illegible],-2
48	.[illegible],-2	.[illegible],-2	.[illegible],-2	.[illegible],-2	.[illegible],-2
49	.[illegible],-2	.[illegible],-2	.[illegible],-2	.[illegible],-2	.[illegible],-2
50	.[illegible],-2	.[illegible],-2	.[illegible],-2	.[illegible],-2	.[illegible],-2
51	.[illegible],-2	.[illegible],-2	.[illegible],-2	.[illegible],-2	.[illegible],-2
52	.[illegible],-2	.[illegible],-2	.[illegible],-2	.[illegible],-2	.[illegible],-2
53	.[illegible],-2	.[illegible],-2	.[illegible],-2	.[illegible],-2	.[illegible],-2
54	.[illegible],-2	.[illegible],-2	.[illegible],-2	.[illegible],-2	.[illegible],-2
55	.[illegible],-2	.[illegible],-2	.[illegible],-2	.[illegible],-2	.[illegible],-2
56	.[illegible],-2	.[illegible],-2	.[illegible],-2	.[illegible],-2	.[illegible],-2
57	.[illegible],-2	.[illegible],-2	.[illegible],-2	.[illegible],-2	.[illegible],-2
58	.[illegible],-2	.[illegible],-2	.[illegible],-2	.[illegible],-2	.[illegible],-2
59	.[illegible],-2	.[illegible],-2	.[illegible],-2	.[illegible],-2	.[illegible],-2
60	.[illegible],-2	.[illegible],-2	.[illegible],-2	.[illegible],-2	.[illegible],-2

Run No. 67; v component

N	Parameter Position Number 1	2	3	4	5
00	.158	.850,-1	.[illegible]	.108	.[illegible]
01	.10[illegible]	.945,-1	.[illegible]	107	.[illegible]
02	.4[illegible],-1	.[illegible],-1	.144	.446,-1	.121
03	.[illegible],-1	.251,-1	.147	.[illegible],-1	.[illegible],-1
04	.[illegible],-1	.[illegible],-1	.147	.[illegible],-1	.[illegible],-1
05	.[illegible],-1	.[illegible],-1	.112	.[illegible],-1	.[illegible],-1
06	.242,-1	.[illegible],-1	.[illegible],-1	.[illegible],-1	.[illegible],-1
07	.[illegible],-1	.[illegible],-1	.[illegible],-1	.[illegible],-1	.[illegible],-1
08	.[illegible],-1	.[illegible],-1	.[illegible],-1	.[illegible],-1	.[illegible],-1
09	.[illegible],-1	.[illegible],-2	.[illegible],-1	.[illegible],-1	.[illegible],-1
10	.[illegible],-1	.[illegible],-2	.[illegible],-1	.[illegible],-1	.[illegible],-1
11	.[illegible],-1	.[illegible],-1	.[illegible],-1	.[illegible],-1	.[illegible],-1
12	.[illegible],-1	.[illegible],-1	.[illegible],-1	.[illegible],-1	.[illegible],-1
13	.[illegible],-1	.[illegible],-1	.[illegible],-1	.[illegible],-1	.[illegible],-1
14	.[illegible],-1	.[illegible],-1	.[illegible],-1	.[illegible],-1	.[illegible],-1
15	.[illegible],-1	.[illegible],-1	.[illegible],-1	.[illegible],-2	.[illegible],-1
16	.[illegible],-1	.[illegible],-1	.[illegible],-1	.[illegible],-2	.[illegible],-1
17	.[illegible],-1	.[illegible],-1	.[illegible],-2	.[illegible],-2	.[illegible],-1
18	.[illegible],-1	.[illegible],-2	.[illegible],-2	.[illegible],-2	.[illegible],-1
19	.[illegible],-1	.[illegible],-2	.[illegible],-2	.[illegible],-2	.[illegible],-1
20	.[illegible],-1	.[illegible],-2	.[illegible],-2	.[illegible],-2	.[illegible],-1
21	.[illegible],-1	.[illegible],-2	.[illegible],-2	.[illegible],-2	.[illegible],-1
22	.[illegible],-1	.[illegible],-2	.[illegible],-2	.[illegible],-2	.[illegible],-1
23	.[illegible],-1	.[illegible],-2	.[illegible],-2	.[illegible],-2	.[illegible],-1
24	.[illegible],-1	.[illegible],-2	.[illegible],-2	.[illegible],-2	.[illegible],-1
25	.[illegible],-1	.[illegible],-2	.[illegible],-2	.[illegible],-2	.[illegible],-1
26	.[illegible],-1	.[illegible],-2	.[illegible],-2	.[illegible],-2	.[illegible],-1
27	.[illegible],-1	.[illegible],-2	.[illegible],-2	.[illegible],-2	.[illegible],-1
28	.[illegible],-1	.[illegible],-2	.[illegible],-2	.[illegible],-2	.[illegible],-1
29	.[illegible],-1	.[illegible],-2	.[illegible],-2	.[illegible],-2	.[illegible],-1
30	.[illegible],-1	.[illegible],-2	.[illegible],-2	.[illegible],-2	.141,-1
31	.[illegible],-1	.[illegible],-2	.[illegible],-2	.[illegible],-2	.[illegible],-1
32	.[illegible],-1	.[illegible],-2	.[illegible],-2	.[illegible],-2	.[illegible],-1
33	.[illegible],-1	.[illegible],-2	.[illegible],-2	.[illegible],-2	.[illegible],-1
34	.[illegible],-1	.[illegible],-2	.[illegible],-2	.[illegible],-2	.[illegible],-1
35	.[illegible],-1	.[illegible],-2	.[illegible],-2	.[illegible],-2	.[illegible],-1
36	.[illegible],-1	.[illegible],-2	.[illegible],-2	.[illegible],-2	.[illegible],-1
37	.[illegible],-1	.[illegible],-2	.[illegible],-2	.[illegible],-2	.[illegible],-1
38	.[illegible],-1	.[illegible],-2	.[illegible],-2	.[illegible],-2	.[illegible],-1
39	.[illegible],-1	.[illegible],-2	.[illegible],-2	.[illegible],-2	.[illegible],-1
40	.[illegible],-1	.[illegible],-2	.[illegible],-2	.[illegible],-2	.[illegible],-1
41	.[illegible],-1	.[illegible],-2	.[illegible],-2	.[illegible],-2	.[illegible],-1
42	.[illegible],-1	.[illegible],-2	.[illegible],-2	.[illegible],-2	.[illegible],-1
43	.[illegible],-1	.[illegible],-2	.[illegible],-2	.[illegible],-2	.[illegible],-1
44	.[illegible],-1	.[illegible],-2	.[illegible],-2	.[illegible],-2	.[illegible],-1
45	.[illegible],-2	.[illegible],-2	.[illegible],-2	.[illegible],-2	.[illegible],-2
46	.[illegible],-2	.[illegible],-2	.[illegible],-2	.[illegible],-2	.[illegible],-2
47	.[illegible],-1	.[illegible],-2	.[illegible],-2	.[illegible],-2	.[illegible],-2
48	.[illegible],-2	.[illegible],-2	.[illegible],-2	.[illegible],-2	.[illegible],-1
49	.[illegible],-2	.[illegible],-2	.[illegible],-2	.[illegible],-2	.[illegible],-1
50	.111,-1	.[illegible],-2	.[illegible],-2	.[illegible],-2	.[illegible],-2
51	.110,-1	.[illegible],-2	.[illegible],-2	.[illegible],-2	.[illegible],-2
52	.[illegible],-1	.[illegible],-2	.[illegible],-2	.[illegible],-2	.[illegible],-2
53	.[illegible],-1	.[illegible],-2	.[illegible],-2	.[illegible],-2	.[illegible],-2
54	.[illegible],-1	.[illegible],-2	.[illegible],-2	.[illegible],-2	.[illegible],-2
55	.[illegible],-1	.[illegible],-2	.[illegible],-2	.[illegible],-2	.[illegible],-2
56	.[illegible],-2	.[illegible],-2	.[illegible],-2	.[illegible],-2	.[illegible],-1
57	.[illegible],-2	.[illegible],-2	.[illegible],-2	.[illegible],-2	.[illegible],-1
58	.[illegible],-2	.[illegible],-2	.[illegible],-2	.[illegible],-2	.[illegible],-2
59	.[illegible],-2	.[illegible],-2	.[illegible],-2	.[illegible],-2	.[illegible],-2
60	.475,-2	.[illegible],-2	.[illegible],-2	.[illegible],-2	.[illegible],-2

Data No. 71 W component

	Anemometer Position Number				
K	1	2	3	4	5
[illegible]	.[illegible],-2	.[illegible],-2	.[illegible],-2	.224,-2	.277,-2
01	.[illegible],-2	.227,-2	.240,-2	.220,-2	.241,-2
02	.[illegible],-2	.[illegible],-2	.277,-2	.218,-2	.209,-2
03	.[illegible],-2	.[illegible],-2	.[illegible],-2	.247,-2	.249,-2
04	.[illegible],-2	.[illegible],-2	.[illegible],-2	.[illegible],-2	.[illegible],-2
05	.[illegible],-2	.[illegible],-2	.[illegible],-2	.265,-2	.248,-2
06	.[illegible],-2	.[illegible],-2	.[illegible],-2	.178,-2	.[illegible],-2
07	.[illegible],-2	.[illegible],-2	.[illegible],-2	.[illegible],-2	.[illegible],-2
08	.[illegible],-2	.[illegible],-2	.[illegible],-2	.[illegible],-2	.[illegible],-2
09	.[illegible],-2	.[illegible],-2	.[illegible],-2	.[illegible],-2	.[illegible],-2
10	.[illegible],-2	.[illegible],-2	.[illegible],-2	.[illegible],-2	.[illegible],-2
11	.[illegible],-2	.[illegible],-2	.[illegible],-2	.[illegible],-2	.[illegible],-2
12	.[illegible],-2	.[illegible],-2	.[illegible],-2	.[illegible],-2	.[illegible],-2
13	.[illegible],-2	.[illegible],-2	.[illegible],-2	.[illegible],-2	.[illegible],-2
14	.[illegible],-2	.[illegible],-2	.[illegible],-2	.[illegible],-2	.[illegible],-2
15	.[illegible],-2	.[illegible],-2	.[illegible],-2	.[illegible],-2	.[illegible],-2
16	.[illegible],-2	.[illegible],-2	.[illegible],-2	.[illegible],-2	.[illegible],-2
17	.[illegible],-2	.[illegible],-2	.[illegible],-2	.[illegible],-2	.[illegible],-2
18	.[illegible],-2	.[illegible],-2	.[illegible],-2	.[illegible],-2	.[illegible],-2
19	.[illegible],-2	.[illegible],-2	.[illegible],-2	.[illegible],-2	.[illegible],-2
20	.[illegible],-2	.[illegible],-2	.[illegible],-2	.[illegible],-2	.[illegible],-2
21	.[illegible],-2	.[illegible],-2	.[illegible],-2	.[illegible],-2	.[illegible],-2
22	.[illegible],-2	.[illegible],-2	.[illegible],-2	.[illegible],-2	.[illegible],-2
23	.[illegible],-2	.[illegible],-2	.[illegible],-2	.[illegible],-2	.[illegible],-2
24	.[illegible],-2	.[illegible],-2	.[illegible],-2	.[illegible],-2	.[illegible],-2
25	.[illegible],-2	.[illegible],-2	.[illegible],-2	.[illegible],-2	.[illegible],-2
26	.[illegible],-2	.[illegible],-2	.[illegible],-2	.[illegible],-2	.[illegible],-2
27	.[illegible],-2	.[illegible],-2	.[illegible],-2	.[illegible],-2	.[illegible],-2
28	.[illegible],-2	.[illegible],-2	.[illegible],-2	.[illegible],-2	.[illegible],-2
29	.[illegible],-2	.[illegible],-2	.[illegible],-2	.[illegible],-2	.[illegible],-2
30	.[illegible],-2	.[illegible],-2	.[illegible],-2	.[illegible],-2	.[illegible],-2
31	.[illegible],-2	.[illegible],-2	.[illegible],-2	.[illegible],-2	.[illegible],-2
32	.[illegible],-2	.[illegible],-2	.[illegible],-2	.[illegible],-2	.[illegible],-2
33	.[illegible],-2	.[illegible],-2	.[illegible],-2	.[illegible],-2	.[illegible],-2
34	.[illegible],-2	.[illegible],-2	.[illegible],-2	.[illegible],-2	.[illegible],-2
35	.[illegible],-2	.[illegible],-2	.[illegible],-2	.[illegible],-2	.[illegible],-2
36	.[illegible],-2	.[illegible],-2	.[illegible],-2	.[illegible],-2	.[illegible],-2
37	.[illegible],-2	.[illegible],-2	.[illegible],-2	.[illegible],-2	.[illegible],-2
38	.[illegible],-2	.[illegible],-2	.[illegible],-2	.[illegible],-2	.[illegible],-2
39	.[illegible],-2	.[illegible],-2	.[illegible],-2	.[illegible],-2	.[illegible],-2
40	.[illegible],-2	.[illegible],-2	.[illegible],-2	.[illegible],-2	.[illegible],-2
41	.[illegible],-2	.[illegible],-2	.[illegible],-2	.[illegible],-2	.[illegible],-2
42	.[illegible],-2	.[illegible],-2	.[illegible],-2	.[illegible],-2	.[illegible],-2
43	.[illegible],-2	.[illegible],-2	.[illegible],-2	.[illegible],-2	.[illegible],-2
44	.[illegible],-2	.[illegible],-2	.[illegible],-2	.[illegible],-2	.[illegible],-2
45	.[illegible],-2	.[illegible],-2	.[illegible],-2	.[illegible],-2	.[illegible],-2
46	.[illegible],-2	.[illegible],-2	.[illegible],-2	.[illegible],-2	.[illegible],-2
47	.[illegible],-2	.[illegible],-2	.[illegible],-2	.[illegible],-2	.[illegible],-2
48	.[illegible],-2	.[illegible],-2	.[illegible],-2	.[illegible],-2	.[illegible],-2
49	.[illegible],-2	.[illegible],-2	.[illegible],-2	.[illegible],-2	.[illegible],-2
50	.[illegible],-2	.[illegible],-2	.[illegible],-2	.[illegible],-2	.[illegible],-2
51	.[illegible],-2	.[illegible],-2	.[illegible],-2	.[illegible],-2	.[illegible],-2
52	.[illegible],-2	.[illegible],-2	.[illegible],-2	.[illegible],-2	.[illegible],-2
53	.[illegible],-2	.[illegible],-2	.[illegible],-2	.[illegible],-2	.[illegible],-2
54	.[illegible],-2	.[illegible],-2	.[illegible],-2	.[illegible],-2	.[illegible],-2
55	.[illegible],-2	.[illegible],-2	.[illegible],-2	.[illegible],-2	.[illegible],-2
56	.[illegible],-2	.[illegible],-2	.[illegible],-2	.[illegible],-2	.[illegible],-2
57	.[illegible],-2	.[illegible],-2	.[illegible],-2	.[illegible],-2	.[illegible],-2
58	.[illegible],-2	.[illegible],-2	.[illegible],-2	.[illegible],-2	.[illegible],-2
59	.[illegible],-2	.[illegible],-2	.[illegible],-2	.[illegible],-2	.[illegible],-2
60	.[illegible],-2	.[illegible],-3	.[illegible],-2	.[illegible],-2	.[illegible],-3

Run No. 60; u component

N	Anemometer Position Number				
	1	2	3	4	5
00	.624,-1	.[illegible],-1	.107	.752,-1	.[illegible],-1
01	.[illegible],-1	.745,-1	.659,-1	.498,-1	.[illegible],-1
02	.149,-1	.[illegible],-1	.[illegible],-1	.171,-1	.171,-1
03	.[illegible],-2	.[illegible],-2	.[illegible],-1	.[illegible],-2	.[illegible],-1
04	.[illegible],-2	.[illegible],-2	.[illegible],-2	.[illegible],-2	.[illegible],-1
05	.[illegible],-2	.110,-1	.[illegible],-2	.[illegible],-2	.[illegible],-1
06	.[illegible],-2	.[illegible],-2	.[illegible],-2	.[illegible],-2	.[illegible],-2
07	.[illegible],-2	.[illegible],-2	.[illegible],-2	.[illegible],-2	.[illegible],-2
08	.[illegible],-2	.[illegible],-2	.[illegible],-2	.[illegible],-2	.[illegible],-2
09	.[illegible],-2	.[illegible],-2	.[illegible],-2	.[illegible],-2	.[illegible],-2
10	.[illegible],-2	.[illegible],-2	.[illegible],-2	.[illegible],-2	.[illegible],-2
11	.[illegible],-2	.[illegible],-2	.[illegible],-2	.[illegible],-2	.[illegible],-2
12	.[illegible],-2	.[illegible],-2	.[illegible],-2	.[illegible],-2	.[illegible],-2
13	.[illegible],-2	.[illegible],-2	.[illegible],-2	.[illegible],-2	.[illegible],-2
14	.[illegible],-2	.[illegible],-2	.[illegible],-2	.[illegible],-2	.[illegible],-2
15	.[illegible],-2	.[illegible],-2	.[illegible],-2	.[illegible],-2	.[illegible],-2
16	.[illegible],-2	.[illegible],-2	.[illegible],-2	.[illegible],-2	.[illegible],-2
17	.[illegible],-2	.[illegible],-2	.[illegible],-2	.[illegible],-2	.[illegible],-2
18	.[illegible],-2	.[illegible],-2	.[illegible],-2	.[illegible],-2	.[illegible],-2
19	.[illegible],-2	.[illegible],-2	.[illegible],-2	.[illegible],-2	.[illegible],-2
20	.[illegible],-2	.[illegible],-2	.[illegible],-2	.[illegible],-2	.[illegible],-2
21	.[illegible],-2	.[illegible],-2	.[illegible],-2	.[illegible],-2	.[illegible],-2
22	.[illegible],-2	.[illegible],-2	.[illegible],-2	.[illegible],-2	.[illegible],-2
23	.[illegible],-2	.[illegible],-2	.[illegible],-2	.[illegible],-2	.[illegible],-2
24	.[illegible],-2	.[illegible],-2	.[illegible],-2	.[illegible],-2	.[illegible],-2
25	.[illegible],-2	.[illegible],-2	.[illegible],-2	.[illegible],-2	.[illegible],-2
26	.[illegible],-2	.[illegible],-2	.[illegible],-2	.[illegible],-2	.[illegible],-2
27	.[illegible],-2	.[illegible],-2	.[illegible],-2	.[illegible],-2	.[illegible],-2
28	.[illegible],-2	.[illegible],-2	.[illegible],-2	.[illegible],-2	.[illegible],-2
29	.[illegible],-2	.[illegible],-2	.[illegible],-2	.[illegible],-2	.[illegible],-2
30	.[illegible],-1	.[illegible],-2	.[illegible],-2	.[illegible],-2	.[illegible],-2
31	.[illegible],-1	.[illegible],-1	.[illegible],-2	.[illegible],-1	.[illegible],-2
32	.[illegible],-1	.[illegible],-1	.[illegible],-2	.[illegible],-1	.[illegible],-2
33	.[illegible],-2	.[illegible],-1	.[illegible],-1	.[illegible],-1	.[illegible],-1
34	.[illegible],-1	.[illegible],-1	.[illegible],-1	.[illegible],-1	.[illegible],-1
35	.[illegible],-1	.[illegible],-1	.[illegible],-1	.[illegible],-2	.[illegible],-2
36	.[illegible],-1	.[illegible],-1	.[illegible],-1	.[illegible],-1	.[illegible],-1
37	.[illegible],-1	.[illegible],-1	.[illegible],-1	.[illegible],-1	.[illegible],-1
38	.[illegible],-1	.[illegible],-1	.[illegible],-1	.[illegible],-1	.[illegible],-1
39	.[illegible],-1	.[illegible],-1	.[illegible],-1	.[illegible],-1	.[illegible],-1
40	.[illegible],-1	.[illegible],-1	.[illegible],-1	.[illegible],-1	.[illegible],-1
41	.[illegible],-1	.[illegible],-1	.[illegible],-1	.[illegible],-1	.[illegible],-1
42	.[illegible],-1	.[illegible],-1	.[illegible],-1	.[illegible],-1	.[illegible],-1
43	.[illegible],-1	.[illegible],-1	.[illegible],-1	.[illegible],-1	.[illegible],-1
44	.[illegible],-1	.[illegible],-1	.[illegible],-1	.[illegible],-1	.[illegible],-1
45	.[illegible],-1	.[illegible],-1	.[illegible],-1	.[illegible],-1	.[illegible],-1
46	.[illegible],-1	.[illegible],-1	.[illegible],-1	.[illegible],-1	.[illegible],-1
47	.[illegible],-1	.[illegible],-1	.[illegible],-1	.[illegible],-1	.[illegible],-1
48	.[illegible],-1	.[illegible],-1	.[illegible],-1	.[illegible],-1	.[illegible],-1
49	.[illegible],-1	.[illegible],-1	.[illegible],-1	.[illegible],-1	.[illegible],-1
50	.[illegible],-1	.[illegible],-1	.[illegible],-1	.[illegible],-1	.[illegible],-1
51	.[illegible],-1	.[illegible],-1	.[illegible],-1	.[illegible],-1	.[illegible],-1
52	.[illegible],-1	.[illegible],-1	.[illegible],-1	.[illegible],-1	.[illegible],-1
53	.[illegible],-1	.[illegible],-1	.[illegible],-1	.[illegible],-1	.[illegible],-1
54	.[illegible],-1	.[illegible],-1	.[illegible],-1	.[illegible],-1	.[illegible],-1
55	.[illegible],-1	.[illegible],-1	.[illegible],-1	.[illegible],-1	.[illegible],-1
56	.[illegible],-1	.[illegible],-1	.[illegible],-1	.[illegible],-1	.[illegible],-1
57	.[illegible],-1	.[illegible],-1	.[illegible],-1	.[illegible],-1	.[illegible],-1
58	.[illegible],-1	.[illegible],-1	.[illegible],-1	.[illegible],-1	.[illegible],-1
59	.[illegible],-1	.[illegible],-1	.[illegible],-1	.[illegible],-1	.[illegible],-1
60	.[illegible],-1	.[illegible],-1	.[illegible],-1	.[illegible],-	.[illegible],-1

Run No. 68; v component

N	Anemometer Position Number 1	2	3	4	5
00	.040,-1	.674,-1	.175	.672,-1	.356,-1
01	.211,-1	.566,-1	.966,-1	.607,-1	.246,-1
02	.114,-1	.342,-1	.614,-1	.609,-1	.254,-1
03	.107,-1	.267,-1	.452,-1	.600,-1	.251,-1
04	.147,-1	.276,-1	.442,-1	.497,-1	.320,-1
05	.156,-1	.250,-1	.372,-1	.477,-1	.247,-1
06	.166,-1	.217,-1	.551,-1	.482,-1	.265,-1
07	.181,-1	.181,-1	.[illegible],-1	.499,-1	.225,-1
08	.171,-1	.147,-1	.509,-1	.572,-1	.206,-1
09	.191,-1	.156,-1	.252,-1	.501,-1	.301,-1
10	.185,-1	.110,-1	.918,-1	.277,-1	.196,-1
11	.205,-1	.[illegible],-2	.170,-1	.255,-1	.261,-1
12	.218,-1	.[illegible],-2	.117,-1	.105,-1	.158,-1
13	.185,-1	.[illegible],-2	.109,-1	.165,-1	.204,-1
14	.253,-1	.[illegible],-2	.[illegible],-2	.157,-1	.357,-1
15	.17[illegible],-1	.[illegible],-2	.[illegible],-2	.[illegible],-1	.219,-1
16	.115,-1	.[illegible],-2	.[illegible],-2	.119,-1	.179,-1
17	.151,-1	.[illegible],-2	.[illegible],-2	.[illegible],-2	.[illegible],-1
18	.191,-1	.[illegible],-2	.[illegible],-2	.[illegible],-2	.158,-1
19	.[illegible],-1	.[illegible],-2	.[illegible],-2	.[illegible],-2	.[illegible],-1
20	.125,-1	.211,-2	.454,-2	.[illegible],-2	.[illegible],-1
21	.111,-1	.[illegible],-2	.[illegible],-2	.[illegible],-2	.[illegible],-1
22	.112,-1	.241,-2	.[illegible],-2	.[illegible],-2	.[illegible],-1
23	.[illegible],-1	.[illegible],-2	.[illegible],-2	.[illegible],-2	.[illegible],-1
24	.[illegible],-1	.[illegible],-2	.[illegible],-2	.[illegible],-2	.[illegible],-1
25	.[illegible],-2	.[illegible],-2	.[illegible],-2	.[illegible],-2	.[illegible],-1
26	.[illegible],-2	.[illegible],-2	.[illegible],-2	.[illegible],-2	.[illegible],-2
27	.[illegible],-2	.[illegible],-2	.[illegible],-2	.[illegible],-2	.[illegible],-2
28	.[illegible],-2	.[illegible],-2	.[illegible],-2	.[illegible],-2	.[illegible],-2
29	.[illegible],-2	.[illegible],-2	.[illegible],-2	.[illegible],-2	.[illegible],-2
30	.[illegible],-2	.[illegible],-2	.[illegible],-2	.[illegible],-2	.[illegible],-2
31	.[illegible],-2	.[illegible],-2	.[illegible],-2	.[illegible],-2	.[illegible],-2
32	.[illegible],-2	.[illegible],-2	.[illegible],-2	.[illegible],-2	.[illegible],-2
33	.[illegible],-2	.[illegible],-2	.[illegible],-2	.[illegible],-2	.[illegible],-2
34	.[illegible],-2	.[illegible],-2	.[illegible],-2	.[illegible],-2	.[illegible],-2
35	.[illegible],-2	.[illegible],-2	.[illegible],-2	.[illegible],-2	.[illegible],-2
36	.[illegible],-2	.[illegible],-2	.[illegible],-2	.[illegible],-2	.[illegible],-2
37	.[illegible],-2	.[illegible],-2	.[illegible],-2	.[illegible],-2	.[illegible],-2
38	.[illegible],-2	.[illegible],-2	.[illegible],-2	.[illegible],-2	.[illegible],-2
39	.[illegible],-2	.[illegible],-2	.[illegible],-2	.[illegible],-2	.[illegible],-2
40	.[illegible],-2	.[illegible],-2	.[illegible],-2	.[illegible],-2	.[illegible],-2
41	.[illegible],-2	.[illegible],-2	.[illegible],-2	.[illegible],-2	.[illegible],-2
42	.[illegible],-2	.[illegible],-2	.[illegible],-2	.[illegible],-2	.[illegible],-2
43	.[illegible],-2	.[illegible],-2	.[illegible],-2	.[illegible],-2	.[illegible],-2
44	.[illegible],-2	.[illegible],-2	.[illegible],-2	.[illegible],-2	.[illegible],-2
45	.[illegible],-2	.[illegible],-2	.[illegible],-2	.[illegible],-2	.[illegible],-2
46	.[illegible],-2	.[illegible],-2	.[illegible],-2	.[illegible],-2	.[illegible],-2
47	.[illegible],-2	.[illegible],-2	.[illegible],-2	.[illegible],-2	.[illegible],-2
48	.[illegible],-2	.[illegible],-2	.[illegible],-2	.[illegible],-2	.[illegible],-2
49	.[illegible],-2	.[illegible],-2	.[illegible],-2	.[illegible],-2	.[illegible],-2
50	.[illegible],-2	.[illegible],-2	.[illegible],-2	.[illegible],-2	.[illegible],-2
51	.[illegible],-2	.[illegible],-2	.[illegible],-2	.[illegible],-2	.[illegible],-2
52	.[illegible],-2	.[illegible],-2	.[illegible],-2	.[illegible],-2	.[illegible],-2
53	.[illegible],-2	.[illegible],-2	.[illegible],-2	.[illegible],-2	.[illegible],-2
54	.[illegible],-2	.[illegible],-2	.[illegible],-2	.[illegible],-2	.[illegible],-2
55	.[illegible],-2	.[illegible],-2	.[illegible],-2	.[illegible],-2	.[illegible],-2
56	.[illegible],-2	.[illegible],-2	.[illegible],-2	.[illegible],-2	.[illegible],-2
57	.[illegible],-2	.[illegible],-2	.[illegible],-2	.[illegible],-2	.[illegible],-2
58	.[illegible],-2	.[illegible],-2	.[illegible],-2	.[illegible],-2	.[illegible],-2
59	.[illegible],-2	.[illegible],-2	.[illegible],-2	.[illegible],-2	.[illegible],-2
60	.[illegible],-2	.[illegible],-2	.[illegible],-2	.[illegible],-2	.[illegible],-2

Run No. 68; x component

	Anemometer Position Number				
K	1	2	3	4	5
00	.568,-3	.359,-3	.662,-3	.550,-3	.624,-3
01	.639,-3	.486,-3	.901,-3	.729,-3	.585,-3
02	.1056,-3	.498,-3	.945,-3	.810,-3	.517,-3
03	.893,-3	.412,-3	.778,-3	.660,-3	.761,-3
04	.758,-3	.346,-3	.655,-3	.737,-3	.821,-3
05	.868,-3	.640,-3	.1154,-3	.715,-3	.739,-3
06	.951,-3	.495,-3	.898,-3	.702,-3	.595,-3
07	.835,-3	.405,-3	.704,-3	.637,-3	.558,-3
08	.820,-3	.419,-3	.727,-3	.574,-3	.709,-3	
09	.822,-3	.350,-3	.626,-3	.646,-3	.101,-2
10	.756,-3	.524,-3	.950,-3	.602,-3	.620,-3
11	.852,-3	.410,-3	.673,-3	.775,-3	.650,-3
12	.106,-2	.479,-3	.859,-3	.540,-3	.592,-3
13	.843,-3	.427,-3	.648,-3	.625,-3	.614,-3
14	.794,-3	.541,-3	.910,-3	.570,-3	.571,-3
15	.715,-3	.644,-3	.1107,-3	.719,-3	.559,-3
16	.767,-3	.710,-3	.1252,-3	.807,-3	.507,-3
17	.705,-3	.651,-3	.1145,-3	.1827,-3	.700,-3
18	.611,-3	.524,-3	.945,-3	.679,-3	.85 ,-3
19	.640,-3	.541,-3	.979,-3	.65 ,-3	.7 ,-3
20	.711,-3	.09,-3	.1[illegible],-3	.620,-3	.769,-3
21	.641,-3	.530,-3	.958,-3	.537,-3	.514,-3
22	.719,-3	.589,-3	.1041,-3	.670,-3	.650,-3
23	.785,-3	.674,-3	.1217,-3	.760[illegible],-3	.699,-3
24	.620,-3	.515,-3	.930,-3	.577,-3	.606,-3
25	.719,-3	.595,-3	.1077,-3	.644,-3	.609,-3
26	.707,-3	.587,-3	.1064,-3	.597,-3	.580,-3
27	.707,-3	.585,-3	.1062,-3	.630,-3	.616,-3
28	.727,-3	.601,-3	.1086,-3	.674,-3	.647,-3
29	.756,-3	.626,-3	.1131,-3	.[illegible],-3	.674,-3
30	.[illegible],-3	.[illegible],-3	.[illegible],-3	.[illegible],-3	.[illegible],-3
31	.[illegible],-3	.[illegible],-3	.[illegible],-3	.[illegible],-3	.[illegible],-3
32	.[illegible],-3	.[illegible],-3	.[illegible],-3	.[illegible],-3	.[illegible],-3
33	.[illegible],-3	.[illegible],-3	.[illegible],-3	.[illegible],-3	.[illegible],-3
34	.[illegible],-3	.[illegible],-3	.[illegible],-3	.[illegible],-3	.[illegible],-3
35	.[illegible],-3	.[illegible],-3	.[illegible],-3	.[illegible],-3	.[illegible],-3
36	.[illegible],-3	.[illegible],-3	.[illegible],-3	.[illegible],-3	.[illegible],-3
37	.[illegible],-3	.[illegible],-3	.[illegible],-3	.[illegible],-3	.[illegible],-3
38	.[illegible],-3	.[illegible],-3	.[illegible],-3	.[illegible],-3	.[illegible],-3
39	.[illegible],-3	.[illegible],-3	.[illegible],-3	.[illegible],-3	.[illegible],-3
40	.[illegible],-3	.[illegible],-3	.[illegible],-3	.[illegible],-3	.[illegible],-3
41	.[illegible],-3	.[illegible],-3	.[illegible],-3	.[illegible],-3	.[illegible],-3
42	.[illegible],-3	.[illegible],-3	.[illegible],-3	.[illegible],-3	.[illegible],-3
43	.[illegible],-3	.[illegible],-3	.[illegible],-3	.[illegible],-3	.[illegible],-3
44	.[illegible],-3	.[illegible],-3	.[illegible],-3	.[illegible],-3	.[illegible],-3
45	.[illegible],-3	.[illegible],-3	.[illegible],-3	.[illegible],-3	.[illegible],-3
46	.[illegible],-3	.[illegible],-3	.[illegible],-3	.[illegible],-3	.[illegible],-3
47	.[illegible],-3	.[illegible],-3	.[illegible],-3	.[illegible],-3	.[illegible],-3
48	.[illegible],-3	.[illegible],-3	.[illegible],-3	.[illegible],-3	.[illegible],-3
49	.[illegible],-3	.[illegible],-3	.[illegible],-3	.[illegible],-3	.[illegible],-3
50	.[illegible],-3	.[illegible],-3	.[illegible],-3	.[illegible],-3	.[illegible],-3
51	.[illegible],-3	.[illegible],-3	.[illegible],-3	.[illegible],-3	.[illegible],-3
52	.[illegible],-3	.[illegible],-3	.[illegible],-3	.[illegible],-3	.[illegible],-3
53	.[illegible],-3	.[illegible],-3	.[illegible],-3	.[illegible],-3	.[illegible],-3
54	.[illegible],-3	.[illegible],-3	.[illegible],-3	.[illegible],-3	.[illegible],-3
55	.817,-3	.476,-3	.906,-3	.552,-3	.606,-3
56	.709,-3	.415,-3	.792,-3	.534,-3	.466,-3
57	.752,-3	.434,-3	.595,-3	.545,-3	.487,-3
58	.819,-3	.406,-3	.666,-3	.551,-3	.512,-3
59	.914,-3	.512,-3	.621,-3	.557,-3	.585,-3
60	.821,-3	.287,-3	.586,-3	.269,-3	.220,-3

TABLE 17.7

Cross-correlation coefficients, T_K^+, lagged downwind for N-S orientation of anemometer line; to the east for E-W orientation. The results are identified by eddy wind component; lag number, K; and separation distance of anemometer pairs. (Pages 422 to 483.) To convert K to a time lag, multiply by Δt = 1.067 seconds.

Run No. 6 : u component

Separation distance (m.)

Y	6	12	18	24	30	42	54	72	84	90
00	.679	.490	.448	.411	.371	.355	.245	.119	.151	.147
01	.506	.398	.370	.455	.345	.358	.252	.111	.142	.157
02	.402	.[illegible]	.316	.313	.[illegible]	.[illegible]	.261	.112	.146	.[illegible]
03	.401	.378	.406	.[illegible]	.461	.[illegible]	.[illegible]	.[illegible]	.[illegible]	.153
04	.[illegible]	.[illegible]	.[illegible]	.[illegible]	.[illegible]	.[illegible]	.[illegible]	.[illegible]	.[illegible]	.176
05	.[illegible]	.[illegible]	.[illegible]	.[illegible]	.[illegible]	.[illegible]	.[illegible]	.[illegible]	.[illegible]	.[illegible]
06	.[illegible]	.[illegible]	.[illegible]	.[illegible]	.[illegible]	.[illegible]	.[illegible]	.[illegible]	.[illegible]	.[illegible]
07	.[illegible]	.[illegible]	.[illegible]	.[illegible]	.[illegible]	.[illegible]	.[illegible]	.[illegible]	.[illegible]	.[illegible]
08	.[illegible]	.[illegible]	.[illegible]	.[illegible]	.[illegible]	.[illegible]	.[illegible]	.[illegible]	.[illegible]	.[illegible]
09	.[illegible]	.[illegible]	.[illegible]	.[illegible]	.[illegible]	.[illegible]	.[illegible]	.[illegible]	.[illegible]	.[illegible]
10	.[illegible]	.[illegible]	.[illegible]	.[illegible]	.[illegible]	.[illegible]	.[illegible]	.[illegible]	.[illegible]	.[illegible]
11	.[illegible]	.[illegible]	.[illegible]	.[illegible]	.[illegible]	.[illegible]	.[illegible]	.[illegible]	.[illegible]	.[illegible]
12	.[illegible]	.[illegible]	.[illegible]	.[illegible]	.[illegible]	.[illegible]	.[illegible]	.[illegible]	.[illegible]	.[illegible]
13	.[illegible]	.[illegible]	.[illegible]	.[illegible]	.[illegible]	.[illegible]	.[illegible]	.[illegible]	.[illegible]	.[illegible]
14	.[illegible]	.[illegible]	.[illegible]	.[illegible]	.[illegible]	.[illegible]	.[illegible]	.[illegible]	.[illegible]	.[illegible]
15	.[illegible]	.[illegible]	.[illegible]	.[illegible]	.[illegible]	.[illegible]	.[illegible]	.[illegible]	.[illegible]	.[illegible]
16	.[illegible]	.[illegible]	.[illegible]	.[illegible]	.[illegible]	.[illegible]	.[illegible]	.[illegible]	.[illegible]	.[illegible]
17	.[illegible]	.[illegible]	.[illegible]	.[illegible]	.[illegible]	.[illegible]	.[illegible]	.[illegible]	.[illegible]	.[illegible]
18	.[illegible]	.[illegible]	.[illegible]	.[illegible]	.[illegible]	.[illegible]	.[illegible]	.[illegible]	.[illegible]	.[illegible]
19	.[illegible]	.[illegible]	.[illegible]	.[illegible]	.[illegible]	.[illegible]	.[illegible]	.[illegible]	.[illegible]	.[illegible]
20	.[illegible]	.[illegible]	.[illegible]	.[illegible]	.[illegible]	.[illegible]	.[illegible]	.[illegible]	.[illegible]	.[illegible]
21	.[illegible]	.[illegible]	.[illegible]	.[illegible]	.[illegible]	.[illegible]	.[illegible]	.[illegible]	.[illegible]	.[illegible]
22	.[illegible]	.[illegible]	.[illegible]	.[illegible]	.[illegible]	.[illegible]	.[illegible]	.[illegible]	.[illegible]	.[illegible]
23	.[illegible]	.[illegible]	.[illegible]	.[illegible]	.[illegible]	.[illegible]	.[illegible]	.[illegible]	.[illegible]	.[illegible]
24	.[illegible]	.[illegible]	.[illegible]	.[illegible]	.[illegible]	.[illegible]	.[illegible]	.[illegible]	.[illegible]	.[illegible]
25	.[illegible]	.[illegible]	.[illegible]	.[illegible]	.[illegible]	.[illegible]	.[illegible]	.[illegible]	.[illegible]	.[illegible]
26	.[illegible]	.[illegible]	.[illegible]	.[illegible]	.[illegible]	.[illegible]	.[illegible]	.[illegible]	.[illegible]	.[illegible]
27	.[illegible]	.[illegible]	.[illegible]	.[illegible]	.[illegible]	.[illegible]	.[illegible]	.[illegible]	.[illegible]	.[illegible]
28	.[illegible]	.[illegible]	.[illegible]	.[illegible]	.[illegible]	.[illegible]	.[illegible]	.[illegible]	.[illegible]	.[illegible]
29	.[illegible]	.[illegible]	.[illegible]	.[illegible]	.[illegible]	.[illegible]	.[illegible]	.[illegible]	.[illegible]	.[illegible]
30	.[illegible]	.[illegible]	.[illegible]	.[illegible]	.[illegible]	.[illegible]	.[illegible]	.[illegible]	.[illegible]	.[illegible]
31	.[illegible]	.[illegible]	.[illegible]	.[illegible]	.[illegible]	.[illegible]	.[illegible]	.[illegible]	.[illegible]	.[illegible]
32	.[illegible]	.[illegible]	.[illegible]	.[illegible]	.[illegible]	.[illegible]	.[illegible]	.[illegible]	.[illegible]	.[illegible]
33	.[illegible]	.[illegible]	.[illegible]	.[illegible]	.[illegible]	.[illegible]	.[illegible]	.[illegible]	.[illegible]	.[illegible]
34	.[illegible]	.[illegible]	.[illegible]	.[illegible]	.[illegible]	.[illegible]	.[illegible]	.[illegible]	.[illegible]	.[illegible]
35	.[illegible]	.[illegible]	.[illegible]	.[illegible]	.[illegible]	.[illegible]	.[illegible]	.[illegible]	.[illegible]	.[illegible]
36	.[illegible]	.[illegible]	.[illegible]	.[illegible]	.[illegible]	.[illegible]	.[illegible]	.[illegible]	.[illegible]	.[illegible]
37	.[illegible]	.[illegible]	.[illegible]	.[illegible]	.[illegible]	.[illegible]	.[illegible]	.[illegible]	.[illegible]	.[illegible]
38	.[illegible]	.[illegible]	.[illegible]	.[illegible]	.[illegible]	.[illegible]	.[illegible]	.[illegible]	.[illegible]	.[illegible]
39	.[illegible]	.[illegible]	.[illegible]	.[illegible]	.[illegible]	.[illegible]	.[illegible]	.[illegible]	.[illegible]	.[illegible]
40	.[illegible]	.[illegible]	.[illegible]	.[illegible]	.[illegible]	.[illegible]	.[illegible]	.[illegible]	.[illegible]	.[illegible]
41	.[illegible]	.[illegible]	.[illegible]	.[illegible]	.[illegible]	.[illegible]	.[illegible]	.[illegible]	.[illegible]	.[illegible]
42	.[illegible]	.[illegible]	.[illegible]	.[illegible]	.[illegible]	.[illegible]	.[illegible]	.[illegible]	.[illegible]	.[illegible]
43	.[illegible]	.[illegible]	.[illegible]	.[illegible]	.[illegible]	.[illegible]	.[illegible]	.[illegible]	.[illegible]	.[illegible]
44	.[illegible]	.[illegible]	.[illegible]	.[illegible]	.[illegible]	.[illegible]	.[illegible]	.[illegible]	.[illegible]	.[illegible]
45	.[illegible]	.[illegible]	.[illegible]	.[illegible]	.[illegible]	.[illegible]	.[illegible]	.[illegible]	.[illegible]	.[illegible]
46	.[illegible]	.[illegible]	.[illegible]	.[illegible]	.[illegible]	.[illegible]	.[illegible]	.[illegible]	.[illegible]	.[illegible]
47	.[illegible]	.[illegible]	.[illegible]	.[illegible]	.[illegible]	.[illegible]	.[illegible]	.[illegible]	.[illegible]	.[illegible]
48	.[illegible]	.[illegible]	.[illegible]	.[illegible]	.[illegible]	.[illegible]	.[illegible]	.[illegible]	.[illegible]	.[illegible]
49	.[illegible]	.[illegible]	.[illegible]	.[illegible]	.[illegible]	.[illegible]	.[illegible]	.[illegible]	.[illegible]	.[illegible]
50	.[illegible]	.[illegible]	.[illegible]	.[illegible]	.[illegible]	.[illegible]	.[illegible]	.[illegible]	.[illegible]	.[illegible]
51	.[illegible]	.[illegible]	.[illegible]	.[illegible]	.[illegible]	.[illegible]	.[illegible]	.[illegible]	.[illegible]	.[illegible]
52	.[illegible]	.[illegible]	.[illegible]	.[illegible]	.[illegible]	.[illegible]	.[illegible]	.[illegible]	.[illegible]	.[illegible]
53	.[illegible]	.[illegible]	.[illegible]	.[illegible]	.[illegible]	.[illegible]	.[illegible]	.[illegible]	.[illegible]	.[illegible]
54	.[illegible]	.[illegible]	.[illegible]	.[illegible]	.[illegible]	.[illegible]	.[illegible]	.[illegible]	.[illegible]	.[illegible]
55	.[illegible]	.[illegible]	.[illegible]	.[illegible]	.[illegible]	.[illegible]	.[illegible]	.[illegible]	.[illegible]	.[illegible]
56	.[illegible]	.[illegible]	.[illegible]	.[illegible]	.[illegible]	.[illegible]	.[illegible]	.[illegible]	.[illegible]	.[illegible]
57	.[illegible]	.[illegible]	.[illegible]	.[illegible]	.[illegible]	.[illegible]	.[illegible]	.[illegible]	.[illegible]	.[illegible]
58	.[illegible]	.[illegible]	.[illegible]	.[illegible]	.[illegible]	.[illegible]	.[illegible]	.[illegible]	.[illegible]	.[illegible]
59	.[illegible]	.[illegible]	.[illegible]	.[illegible]	.[illegible]	.[illegible]	.[illegible]	.[illegible]	.[illegible]	.[illegible]
60	.[illegible]	.[illegible]	.[illegible]	.[illegible]	.[illegible]	.[illegible]	.[illegible]	.[illegible]	.[illegible]	.[illegible]
61	.[illegible]	.[illegible]	.[illegible]	.[illegible]	.[illegible]	.[illegible]	.[illegible]	.[illegible]	.[illegible]	.[illegible]
62	.[illegible]	.[illegible]	.[illegible]	.[illegible]	.[illegible]	.[illegible]	.[illegible]	.[illegible]	.[illegible]	.[illegible]
63	.[illegible]	.[illegible]	.[illegible]	.[illegible]	.[illegible]	.[illegible]	.[illegible]	.[illegible]	.[illegible]	.[illegible]
64	.[illegible]	.[illegible]	.[illegible]	.[illegible]	.[illegible]	.[illegible]	.[illegible]	.[illegible]	.[illegible]	.[illegible]
65	.[illegible]	.[illegible]	.[illegible]	.[illegible]	.[illegible]	.[illegible]	.[illegible]	.[illegible]	.[illegible]	.[illegible]
66	.[illegible]	.[illegible]	.[illegible]	.[illegible]	.[illegible]	.[illegible]	.[illegible]	.[illegible]	.[illegible]	.[illegible]
67	.[illegible]	.[illegible]	.[illegible]	.[illegible]	.[illegible]	.[illegible]	.[illegible]	.[illegible]	.[illegible]	.[illegible]
68	.[illegible]	.[illegible]	.[illegible]	.[illegible]	.[illegible]	.[illegible]	.[illegible]	.[illegible]	.[illegible]	.[illegible]
69	.[illegible]	.[illegible]	.[illegible]	.[illegible]	.[illegible]	.[illegible]	.[illegible]	.[illegible]	.[illegible]	.[illegible]
70	.[illegible]	.[illegible]	.[illegible]	.[illegible]	.[illegible]	.[illegible]	.[illegible]	.[illegible]	.[illegible]	.[illegible]
71	.[illegible]	.[illegible]	.[illegible]	.[illegible]	.[illegible]	.[illegible]	.[illegible]	.[illegible]	.[illegible]	.[illegible]
72	.[illegible]	.[illegible]	.[illegible]	.[illegible]	.[illegible]	.[illegible]	.[illegible]	.[illegible]	.[illegible]	.[illegible]
73	.[illegible]	.[illegible]	.[illegible]	.[illegible]	.[illegible]	.[illegible]	.[illegible]	.[illegible]	.[illegible]	.[illegible]
74	.[illegible]	.[illegible]	.[illegible]	.[illegible]	.[illegible]	.[illegible]	.[illegible]	.[illegible]	.[illegible]	.[illegible]
75	.[illegible]	.[illegible]	.[illegible]	.[illegible]	.[illegible]	.[illegible]	.[illegible]	.[illegible]	.[illegible]	.[illegible]
76	.[illegible]	.[illegible]	.[illegible]	.[illegible]	.[illegible]	.[illegible]	.[illegible]	.[illegible]	.[illegible]	.[illegible]
77	.[illegible]	.[illegible]	.[illegible]	.[illegible]	.[illegible]	.[illegible]	.[illegible]	.[illegible]	.[illegible]	.[illegible]
78	.[illegible]	.[illegible]	.[illegible]	.[illegible]	.[illegible]	.[illegible]	.[illegible]	.[illegible]	.[illegible]	.[illegible]
79	.[illegible]	.[illegible]	.[illegible]	.[illegible]	.[illegible]	.[illegible]	.[illegible]	.[illegible]	.[illegible]	.[illegible]
80	.[illegible]	.[illegible]	.[illegible]	.[illegible]	.[illegible]	.[illegible]	.[illegible]	.[illegible]	.[illegible]	.[illegible]
81	.[illegible]	.[illegible]	.[illegible]	.[illegible]	.[illegible]	.[illegible]	.[illegible]	.[illegible]	.[illegible]	.[illegible]
82	.[illegible]	.[illegible]	.[illegible]	.[illegible]	.[illegible]	.[illegible]	.[illegible]	.[illegible]	.[illegible]	.[illegible]
83	.[illegible]	.[illegible]	.[illegible]	.[illegible]	.[illegible]	.[illegible]	.[illegible]	.[illegible]	.[illegible]	.[illegible]
84	.[illegible]	.[illegible]	.[illegible]	.[illegible]	.[illegible]	.[illegible]	.[illegible]	.[illegible]	.[illegible]	.[illegible]
85	.[illegible]	.[illegible]	.[illegible]	.[illegible]	.[illegible]	.[illegible]	.[illegible]	.[illegible]	.[illegible]	.[illegible]
86	.[illegible]	.[illegible]	.[illegible]	.[illegible]	.[illegible]	.[illegible]	.[illegible]	.[illegible]	.[illegible]	.[illegible]
87	.[illegible]	.[illegible]	.[illegible]	.[illegible]	.[illegible]	.[illegible]	.[illegible]	.[illegible]	.[illegible]	.[illegible]
88	.[illegible]	.[illegible]	.[illegible]	.[illegible]	.[illegible]	.[illegible]	.[illegible]	.[illegible]	.[illegible]	.[illegible]
89	.[illegible]	.[illegible]	.[illegible]	.[illegible]	.[illegible]	.[illegible]	.[illegible]	.[illegible]	.[illegible]	.[illegible]
90	.[illegible]	.[illegible]	.[illegible]	.[illegible]	.[illegible]	.[illegible]	.[illegible]	.[illegible]	.[illegible]	.[illegible]
91	.[illegible]	.[illegible]	.[illegible]	.[illegible]	.[illegible]	.[illegible]	.[illegible]	.[illegible]	.[illegible]	.[illegible]
92	.[illegible]	.[illegible]	.[illegible]	.[illegible]	.[illegible]	.[illegible]	.[illegible]	.[illegible]	.[illegible]	.[illegible]
93	.[illegible]	.[illegible]	.[illegible]	.[illegible]	.[illegible]	.[illegible]	.[illegible]	.[illegible]	.[illegible]	.[illegible]
94	.[illegible]	.[illegible]	.[illegible]	.[illegible]	.[illegible]	.[illegible]	.[illegible]	.[illegible]	.[illegible]	.[illegible]
95	.[illegible]	.[illegible]	.[illegible]	.[illegible]	.[illegible]	.[illegible]	.[illegible]	.[illegible]	.[illegible]	.[illegible]
96	.[illegible]	.[illegible]	.[illegible]	.[illegible]	.[illegible]	.[illegible]	.[illegible]	.[illegible]	.[illegible]	.[illegible]
97	.[illegible]	.[illegible]	.[illegible]	.[illegible]	.[illegible]	.[illegible]	.[illegible]	.[illegible]	.[illegible]	.[illegible]
98	.[illegible]	.[illegible]	.[illegible]	.[illegible]	.[illegible]	.[illegible]	.[illegible]	.[illegible]	.[illegible]	.[illegible]
99	.[illegible]	.[illegible]	.[illegible]	.[illegible]	.[illegible]	.[illegible]	.[illegible]	.[illegible]	.[illegible]	.[illegible]

Run No. 6 ; v component

Separation Distance (m.)

K	6	12	18	24	36	42	48	72	84	90
00	.702	.547	.585	.645	.550	.569	.495	.487	.456	.458
01	.605	.578	.607	.758	.552	.581	.528	.504	.469	.479
02	.531	.617	.670	.637	.610	.620	.567	.515	.467	.485
03	.530	.662	.775	.655	.655	.665	.579	.525	.464	.489
04	.506	.708	.680	.578	.685	.697	.604	.551	.469	.491
05	.514	.651	.608	.562	.715	.665	.620	.571	.505	.492
06	.487	.581	.550	.555	.655	.618	.661	.598	.519	.534
07	.457	.536	.530	.539	.599	.575	.648	.632	.534	.540
08	.459	.561	.520	.508	.567	.552	.705	.647	.567	.561
09	.413	.605	.501	.490	.540	.540	.662	.649	.571	.559
10	.411	.487	.471	.447	.515	.505	.685	.655	.549	.700
11	.395	.479	.466	.446	.519	.498	.610	.606	.619	.648
12	.372	.547	.456	.456	.491	.480	.600	.598	.651	.619
13	.366	.531	.462	.420	.[illegible]	.456	.[illegible]	.[illegible]	.[illegible]	.[illegible]
14	.365	.490	.469	.410	.460	.455	.558	.556	.609	.591
15	.367	.491	.504	.400	.487	.411	.517	.520	.597	.577
16	.358	.465	.469	.395	.481	.403	.509	.477	.571	.564
17	.362	.501	.551	.396	.395	.374	.497	.472	.536	.551
18	.346	.503	.517	.375	.[illegible]	.366	.471	.458	.[illegible]	.518
19	.352	.554	.551	.378	.390	.370	.476	.467	.502	.496
20	.339	.491	.532	.470	.372	.359	.[illegible]	.[illegible]	.475	.494
21	.[illegible]	.540	.[illegible]	.[illegible]	.[illegible]	.[illegible]	.[illegible]	.[illegible]	.[illegible]	.450
22	.[illegible]	.578	.557	.471	.[illegible]	.[illegible]	.[illegible]	.[illegible]	.[illegible]	.451
23	.[illegible]	.[illegible]	.[illegible]	.[illegible]	.[illegible]	.[illegible]	.[illegible]	.[illegible]	.[illegible]	.[illegible]
24	.[illegible]	.[illegible]	.[illegible]	.[illegible]	.[illegible]	.[illegible]	.[illegible]	.[illegible]	.[illegible]	.[illegible]
25	.[illegible]	.[illegible]	.[illegible]	.[illegible]	.[illegible]	.[illegible]	.[illegible]	.[illegible]	.[illegible]	.[illegible]
26	.[illegible]	.[illegible]	.[illegible]	.[illegible]	.[illegible]	.[illegible]	.[illegible]	.[illegible]	.[illegible]	.[illegible]
27	.[illegible]	.[illegible]	.[illegible]	.[illegible]	.[illegible]	.[illegible]	.[illegible]	.[illegible]	.[illegible]	.[illegible]
28	.[illegible]	.[illegible]	.[illegible]	.[illegible]	.[illegible]	.[illegible]	.[illegible]	.[illegible]	.[illegible]	.[illegible]
29	.[illegible]	.[illegible]	.[illegible]	.[illegible]	.[illegible]	.[illegible]	.[illegible]	.[illegible]	.[illegible]	.[illegible]
30	.[illegible]	.[illegible]	.[illegible]	.[illegible]	.[illegible]	.[illegible]	.[illegible]	.[illegible]	.[illegible]	.[illegible]
31	.[illegible]	.[illegible]	.[illegible]	.[illegible]	.[illegible]	.[illegible]	.[illegible]	.[illegible]	.[illegible]	.[illegible]
32	.[illegible]	.[illegible]	.[illegible]	.[illegible]	.[illegible]	.[illegible]	.[illegible]	.[illegible]	.[illegible]	.[illegible]
33	.[illegible]	.[illegible]	.[illegible]	.[illegible]	.[illegible]	.[illegible]	.[illegible]	.[illegible]	.[illegible]	.[illegible]
34	.[illegible]	.[illegible]	.[illegible]	.[illegible]	.[illegible]	.[illegible]	.[illegible]	.[illegible]	.[illegible]	.[illegible]
35	.[illegible]	.[illegible]	.[illegible]	.[illegible]	.[illegible]	.[illegible]	.[illegible]	.[illegible]	.[illegible]	.[illegible]
36	.[illegible]	.[illegible]	.[illegible]	.[illegible]	.[illegible]	.[illegible]	.[illegible]	.[illegible]	.[illegible]	.[illegible]
37	.[illegible]	.[illegible]	.[illegible]	.[illegible]	.[illegible]	.[illegible]	.[illegible]	.[illegible]	.[illegible]	.[illegible]
38	.[illegible]	.[illegible]	.[illegible]	.[illegible]	.[illegible]	.[illegible]	.[illegible]	.[illegible]	.[illegible]	.[illegible]
39	.[illegible]	.[illegible]	.[illegible]	.[illegible]	.[illegible]	.[illegible]	.[illegible]	.[illegible]	.[illegible]	.[illegible]
40	.[illegible]	.[illegible]	.[illegible]	.[illegible]	.[illegible]	.[illegible]	.[illegible]	.[illegible]	.[illegible]	.[illegible]
41	.[illegible]	.[illegible]	.[illegible]	.[illegible]	.[illegible]	.[illegible]	.[illegible]	.[illegible]	.[illegible]	.[illegible]
42	.[illegible]	.[illegible]	.[illegible]	.[illegible]	.[illegible]	.[illegible]	.[illegible]	.[illegible]	.[illegible]	.[illegible]
43	.[illegible]	.[illegible]	.[illegible]	.[illegible]	.[illegible]	.[illegible]	.[illegible]	.[illegible]	.[illegible]	.[illegible]
44	.[illegible]	.[illegible]	.[illegible]	.[illegible]	.[illegible]	.[illegible]	.[illegible]	.[illegible]	.[illegible]	.[illegible]
45	.[illegible]	.[illegible]	.[illegible]	.[illegible]	.[illegible]	.[illegible]	.[illegible]	.[illegible]	.[illegible]	.[illegible]
46	.[illegible]	.[illegible]	.[illegible]	.[illegible]	.[illegible]	.[illegible]	.[illegible]	.[illegible]	.[illegible]	.[illegible]
47	.[illegible]	.[illegible]	.[illegible]	.[illegible]	.[illegible]	.[illegible]	.[illegible]	.[illegible]	.[illegible]	.[illegible]
48	.[illegible]	.[illegible]	.[illegible]	.[illegible]	.[illegible]	.[illegible]	.[illegible]	.[illegible]	.[illegible]	.[illegible]
49	.[illegible]	.[illegible]	.[illegible]	.[illegible]	.[illegible]	.[illegible]	.[illegible]	.[illegible]	.[illegible]	.[illegible]
50	.[illegible]	.[illegible]	.[illegible]	.[illegible]	.[illegible]	.[illegible]	.[illegible]	.[illegible]	.[illegible]	.[illegible]
51	.[illegible]	.[illegible]	.[illegible]	.[illegible]	.[illegible]	.[illegible]	.[illegible]	.[illegible]	.[illegible]	.[illegible]
52	.[illegible]	.[illegible]	.[illegible]	.[illegible]	.[illegible]	.[illegible]	.[illegible]	.[illegible]	.[illegible]	.[illegible]
53	.[illegible]	.[illegible]	.[illegible]	.[illegible]	.[illegible]	.[illegible]	.[illegible]	.[illegible]	.[illegible]	.[illegible]
54	.[illegible]	.[illegible]	.[illegible]	.[illegible]	.[illegible]	.[illegible]	.[illegible]	.[illegible]	.[illegible]	.[illegible]
55	.155,-1	.880,-1	.786,-1	.606,-1	.515,-1	.534,-1	.115	.[illegible]	.139	.117
56	.591,-1	.486,-1	.874,-1	.[illegible]	.[illegible]	.326,-1	.756,-1	.138	.122	.116
57	.640,-1	.825,-1	.958,-1	.971,-1	.847,-2	.506,-1	.747,-1	.122	.128	.124
58	.632,-1	.959,-1	.705,-1	.105	.581,-1	.340,-1	.815,-1	.120	.122	.107
59	.705,-1	.588,-1	.615,-1	.111	.560,-1	.427,-1	.659,-1	.107	.954,-1	.101
60	.569,-1	.484,-1	.755,-1	.113	.371,-1	.581,-1	.602,-1	.100	.924,-1	.922,-1

Run No. 7 (u component

Separation Distance (m.)

K	6	12	18	24	30	42	60	72	84	90
00	.[illegible]	.779	.772	.684	.640	.632	.577	.491	.465	.456
01	.831	.817	.789	.669	.667	.650	.591	.508	.460	.467
02	.822	.811	.792	.717	.680	.666	.615	.[illegible]	.[illegible]	.477
03	.800	.[illegible]	.800	.724	.697	.677	.644	.544	.505	.501
04	.775	.767	.742	.772	.[illegible]	.694	.661	.[illegible]	.[illegible]	.518
05	.755	.760	.778	.755	.704	.697	.675	.549	.551	.534
06	.721	.757	.757	.724	.698	.708	.686	.595	.573	.549
07	.704	.721	.757	.711	.695	.695	.698	.[illegible]	.545	.560
08	.691	.710	.715	.712	.691	.696	.[illegible]	.[illegible]	.611	.572
09	.675	.698	.695	.700	.685	.[illegible]	.691	.[illegible]	.618	.586
10	.654	.674	.688	.693	.674	.[illegible]	.676	.[illegible]	.618	.594
11	.741	.670	.675	.690	.676	.[illegible]	.654	.[illegible]	.618	.605
12	.749	.697	.695	.[illegible]	.[illegible]	.[illegible]	.[illegible]	.[illegible]	.619	.608
13	.[illegible]	.[illegible]	.[illegible]	.[illegible]	.[illegible]	.[illegible]	.[illegible]	.[illegible]	.616	.594
14	.[illegible]	.[illegible]	.[illegible]	.[illegible]	.[illegible]	.[illegible]	.[illegible]	.[illegible]	.[illegible]	.[illegible]
15	.[illegible]	.[illegible]	.[illegible]	.[illegible]	.[illegible]	.[illegible]	.[illegible]	.[illegible]	.[illegible]	.[illegible]
16	.[illegible]	.[illegible]	.[illegible]	.[illegible]	.[illegible]	.[illegible]	.[illegible]	.[illegible]	.[illegible]	.[illegible]
17	.[illegible]	.[illegible]	.[illegible]	.[illegible]	.[illegible]	.[illegible]	.[illegible]	.[illegible]	.[illegible]	.[illegible]
18	.[illegible]	.[illegible]	.[illegible]	.[illegible]	.[illegible]	.[illegible]	.[illegible]	.[illegible]	.[illegible]	.[illegible]
19	.[illegible]	.[illegible]	.[illegible]	.[illegible]	.[illegible]	.[illegible]	.[illegible]	.[illegible]	.[illegible]	.[illegible]
20	.[illegible]	.[illegible]	.[illegible]	.[illegible]	.[illegible]	.[illegible]	.[illegible]	.[illegible]	.[illegible]	.[illegible]
21	.[illegible]	.[illegible]	.[illegible]	.[illegible]	.[illegible]	.[illegible]	.[illegible]	.[illegible]	.[illegible]	.[illegible]
22	.[illegible]	.[illegible]	.[illegible]	.[illegible]	.[illegible]	.[illegible]	.[illegible]	.[illegible]	.[illegible]	.[illegible]
23	.[illegible]	.[illegible]	.[illegible]	.[illegible]	.[illegible]	.[illegible]	.[illegible]	.[illegible]	.[illegible]	.[illegible]
24	.[illegible]	.[illegible]	.[illegible]	.[illegible]	.[illegible]	.[illegible]	.[illegible]	.[illegible]	.[illegible]	.[illegible]
25	.[illegible]	.[illegible]	.[illegible]	.[illegible]	.[illegible]	.[illegible]	.[illegible]	.[illegible]	.[illegible]	.[illegible]
26	.[illegible]	.[illegible]	.[illegible]	.[illegible]	.[illegible]	.[illegible]	.[illegible]	.[illegible]	.[illegible]	.[illegible]
27	.[illegible]	.[illegible]	.[illegible]	.[illegible]	.[illegible]	.[illegible]	.[illegible]	.[illegible]	.[illegible]	.[illegible]
28	.[illegible]	.[illegible]	.[illegible]	.[illegible]	.[illegible]	.[illegible]	.[illegible]	.[illegible]	.[illegible]	.[illegible]
29	.[illegible]	.[illegible]	.[illegible]	.[illegible]	.[illegible]	.[illegible]	.[illegible]	.[illegible]	.[illegible]	.[illegible]
30	.[illegible]	.[illegible]	.[illegible]	.[illegible]	.[illegible]	.[illegible]	.[illegible]	.[illegible]	.[illegible]	.[illegible]
31	.[illegible]	.[illegible]	.[illegible]	.[illegible]	.[illegible]	.[illegible]	.[illegible]	.[illegible]	.[illegible]	.[illegible]
32	.[illegible]	.[illegible]	.[illegible]	.[illegible]	.[illegible]	.[illegible]	.[illegible]	.[illegible]	.[illegible]	.[illegible]
33	.[illegible]	.[illegible]	.[illegible]	.[illegible]	.[illegible]	.[illegible]	.[illegible]	.[illegible]	.[illegible]	.[illegible]
34	.[illegible]	.[illegible]	.[illegible]	.[illegible]	.[illegible]	.[illegible]	.[illegible]	.[illegible]	.[illegible]	.[illegible]
35	.[illegible]	.[illegible]	.[illegible]	.[illegible]	.[illegible]	.[illegible]	.[illegible]	.[illegible]	.[illegible]	.[illegible]
36	.[illegible]	.[illegible]	.[illegible]	.[illegible]	.[illegible]	.[illegible]	.[illegible]	.[illegible]	.[illegible]	.[illegible]
37	.[illegible]	.[illegible]	.[illegible]	.[illegible]	.[illegible]	.[illegible]	.[illegible]	.[illegible]	.[illegible]	.[illegible]
38	.[illegible]	.[illegible]	.[illegible]	.[illegible]	.[illegible]	.[illegible]	.[illegible]	.[illegible]	.[illegible]	.[illegible]
39	.[illegible]	.[illegible]	.[illegible]	.[illegible]	.[illegible]	.[illegible]	.[illegible]	.[illegible]	.[illegible]	.[illegible]
40	.[illegible]	.[illegible]	.[illegible]	.[illegible]	.[illegible]	.[illegible]	.[illegible]	.[illegible]	.[illegible]	.[illegible]
41	.[illegible]	.[illegible]	.[illegible]	.[illegible]	.[illegible]	.[illegible]	.[illegible]	.[illegible]	.[illegible]	.[illegible]
42	.[illegible]	.[illegible]	.[illegible]	.[illegible]	.[illegible]	.[illegible]	.[illegible]	.[illegible]	.[illegible]	.[illegible]
43	.[illegible]	.[illegible]	.[illegible]	.[illegible]	.[illegible]	.[illegible]	.[illegible]	.[illegible]	.[illegible]	.[illegible]
44	.[illegible]	.[illegible]	.[illegible]	.[illegible]	.[illegible]	.[illegible]	.[illegible]	.[illegible]	.[illegible]	.[illegible]
45	.[illegible]	.[illegible]	.[illegible]	.[illegible]	.[illegible]	.[illegible]	.[illegible]	.[illegible]	.[illegible]	.[illegible]
46	.[illegible]	.[illegible]	.[illegible]	.[illegible]	.[illegible]	.[illegible]	.[illegible]	.[illegible]	.[illegible]	.[illegible]
47	.[illegible]	.[illegible]	.[illegible]	.[illegible]	.[illegible]	.[illegible]	.[illegible]	.[illegible]	.[illegible]	.[illegible]
48	.[illegible]	.[illegible]	.[illegible]	.[illegible]	.[illegible]	.[illegible]	.[illegible]	.[illegible]	.[illegible]	.[illegible]
49	.[illegible]	.[illegible]	.[illegible]	.[illegible]	.[illegible]	.[illegible]	.[illegible]	.[illegible]	.[illegible]	.[illegible]
50	.[illegible]	.[illegible]	.[illegible]	.[illegible]	.[illegible]	.[illegible]	.[illegible]	.[illegible]	.[illegible]	.[illegible]
51	.[illegible]	.[illegible]	.[illegible]	.[illegible]	.[illegible]	.[illegible]	.[illegible]	.[illegible]	.[illegible]	.[illegible]
52	.[illegible]	.[illegible]	.[illegible]	.[illegible]	.[illegible]	.[illegible]	.[illegible]	.[illegible]	.[illegible]	.[illegible]
53	.[illegible]	.[illegible]	.[illegible]	.[illegible]	.[illegible]	.[illegible]	.[illegible]	.[illegible]	.[illegible]	.[illegible]
54	.[illegible]	.[illegible]	.[illegible]	.[illegible]	.[illegible]	.[illegible]	.[illegible]	.[illegible]	.[illegible]	.[illegible]
55	.[illegible]	.[illegible]	.[illegible]	.[illegible]	.[illegible]	.[illegible]	.[illegible]	.[illegible]	.[illegible]	.[illegible]
56	.[illegible]	.[illegible]	.[illegible]	.[illegible]	.[illegible]	.[illegible]	.[illegible]	.[illegible]	.[illegible]	.[illegible]
57	.[illegible]	.[illegible]	.[illegible]	.[illegible]	.[illegible]	.[illegible]	.[illegible]	.[illegible]	.[illegible]	.[illegible]
58	.[illegible]	.[illegible]	.[illegible]	.[illegible]	.[illegible]	.[illegible]	.[illegible]	.[illegible]	.[illegible]	.[illegible]
59	.[illegible]	.[illegible]	.[illegible]	.[illegible]	.[illegible]	.[illegible]	.[illegible]	.[illegible]	.[illegible]	.[illegible]
60	.[illegible]	.[illegible]	.[illegible]	.[illegible]	.[illegible]	.[illegible]	.[illegible]	.[illegible]	.[illegible]	.[illegible]

Run No. 7 ; v component

Separation distance (m.)

k	6	12	18	24	36	42	48	72	84	90
00	.908	.850	.810	.795	.744	.727	-.830,-2	.597	.350	.341
01	.919	.872	.835	.811	.760	.751	.156,-1	.546	.351	.350
02	.896	.893	.854	.827	.757	.732	.375,-1	.546	.561	.559
03	.862	.891	.862	.844	.765	.739	.289,-1	.605	.569	.563
04	.828	.875	.855	.860	.769	.749	-.166,-1	.617	.574	.566
05	.790	.836	.840	.862	.777	.743	.556,-1	.627	.598	.564
06	.791	.811	.820	.855	.791	.755	.900,-1	.639	.595	.576
07	.766	.788	.797	.838	.797	.779	.814,-1	.649	.608	.584
08	.755	.769	.778	.811	.800	.775	.114	.651	.601	.597
09	.759	.755	.759	.790	.799	.770	.100	.648	.650	.602
10	.755	.745	.760	.775	.786	.767	.521,-1	.677	.646	.607
11	.718	.735	.738	.766	.769	.760	.934,-1	.684	.646	.604
12	.709	.725	.735	.769	.746	.741	.145	.646	.647	.612
13	.699	.716	.709	.736	.735	.731	.151	.607	.647	.614
14	.695	.707	.705	.720	.715	.719	.859,-1	.719	.657	.614
15	.675	.698	.698	.708	.702	.704	.849,-1	.750	.657	.617
16	.662	.687	.690	.695	.714	.699	.661,-1	.746	.669	.627
17	.666	.677	.678	.705	.698	.698	.943,-1	.750	.681	.648
18	.681	.672	.666	.669	.668	.687	.110	.756	.693	.667
19	.655	.660	.655	.655	.687	.684	.855,-1	.718	.714	.685
20	.686	.656	.660	.662	.677	.678	.760,-1	.698	.716	.696
21	.669	.647	.665	.664	.666	.671	.851,-1	.677	.701	.706
22	.619	.646	.642	.650	.650	.659	.794,-1	.661	.648	.709
23	.616	.638	.639	.634	.644	.635	.108	.651	.670	.694
24	.599	.628	.632	.630	.645	.647	.948,-1	.648	.659	.675
25	.579	.617	.624	.626	.645	.643	.121	.638	.647	.660
26	.564	.619	.616	.614	.639	.639	.142	.661	.635	.698
27	.555	.597	.607	.615	.638	.636	.195	.612	.626	.656
28	.550	.591	.595	.609	.623	.629	.106	.597	.661	.647
29	.546	.582	.590	.595	.617	.626	.120	.595	.618	.626
30	.540	.575	.575	.586	.615	.616	.169	.574	.619	.617
31	.530	.567	.565	.578	.605	.606	.155	.571	.607	.616
32	.528	.561	.556	.571	.595	.600	.144	.564	.598	.606
33	.515	.547	.551	.565	.585	.589	.175	.561	.585	.597
34	.509	.535	.541	.555	.579	.578	.170	.547	.575	.576
35	.500	.561	.536	.556	.565	.560	.809	.470	.570	.572
36	.498	.519	.522	.550	.559	.550	.179	.561	.567	.560
37	.490	.508	.508	.541	.551	.542	.165	.562	.565	.560
38	.478	.502	.502	.531	.544	.537	.185	.557	.565	.560
39	.469	.491	.491	.518	.535	.530	.187	.550	.558	.560
40	.460	.479	.479	.506	.527	.526	.183	.548	.550	.556
41	.460	.468	.468	.497	.519	.516	.195	.546	.549	.545
42	.454	.455	.455	.492	.509	.508	.191	.535	.556	.557
43	.466	.459	.464	.494	.508	.496	.157	.550	.554	.557
44	.476	.452	.457	.441	.490	.476	.154	.552	.549	.519
45	.466	.468	.464	.491	.476	.479	.164	.515	.548	.513
46	.456	.469	.461	.470	.468	.472	.141	.511	.539	.509
47	.456	.468	.470	.505	.447	.469	.159	.506	.518	.497
48	.578	.467	.405	.576	.446	.435	.127	.497	.507	.496
49	.578	.418	.535	.575	.424	.419	.101	.490	.496	.494
50	.570	.406	.566	.570	.415	.404	.115	.497	.491	.475
51	.569	.400	.592	.568	.410	.395	.115	.445	.469	.469
52	.557	.400	.590	.565	.406	.391	.727,-1	.430	.454	.456
53	.559	.397	.586	.557	.400	.389	.102	.415	.442	.459
54	.586	.388	.575	.552	.398	.385	.107	.405	.425	.420
55	.511	.374	.568	.587	.380	.375	.937,-1	.566	.411	.415
56	.509	.361	.560	.558	.370	.364	.107	.378	.394	.404
57	.496	.357	.548	.555	.365	.359	.148	.363	.391	.399
58	.490	.385	.527	.529	.363	.357	.146	.352	.380	.390
59	.485	.315	.514	.526	.358	.355	.162	.359	.375	.389
60	.475	.302	.505	.516	.350	.357	.161	.332	.365	.377

Run No. T ; v component

K	Separation Distance (m.)									
	6	12	18	24	36	42	48	72	84	90
00	.110	.161,-1	.619,-1	-.457,-2	-.755,-2	.496,-2	.676	.303,-3	-.366,-1	-.486,-1
01	.109	.2 ,-1	.315,-1	-.340,-2	-.226,-1	-.346,-1	.681	.165,-1	-.209,-1	-.270,-1
02	.115	.254,-1	.460,-1	-.257,-2	-.519,-1	.305,-2	.672	-.216,-1	-.244,-1	-.216,-1
03	.665,-1	.440,-1	.120	.544,-1	-.731,-2	-.122,-1	.693	.230,-1	.355,-1	-.146,-1
04	.300,-1	-.672,-2	.227,-1	.766,-1	-.262,-1	-.205,-1	.672	.450,-1	.211,-1	-.102,-1
05	.295,-1	.736,-2	.514,-1	.280,-1	.544,-1	.115,-1	.717	.779,-1	.566,-1	.154,-1
06	.740,-2	.125,-1	.697,-1	.679,-1	.851,-1	-.500,-2	.691	.413,-1	.669,-1	-.156,-1
07	-.110,-1	-.966,-1	.551,-1	.651,-1	.153,-1	.347,-1	.668	.235,-1	.747,-1	.169,-1
08	-.559,-1	.597,-1	.785,-1	.557,-1	.640,-1	-.166,-2	.659	.196,-1	-.800,-5	.966,-2
09	.496,-1	.176,-1	.617,-1	.186,-1	.810,-1	.265,-1	.694	.529,-1	-.585,-2	.866,-1
10	-.100,-2	-.526,-2	-.212,-1	.152,-2	.646,-1	.574,-1	.684	.361,-1	.261,-1	-.156,-1
11	.550,-2	.512,-1	-.446,-1	.159,-1	.454,-1	.507,-1	.701	.669,-1	.806,-1	.117,-1
12	-.499,-1	.450,-1	-.590,-2	-.276,-1	.450,-2	.337,-1	.680	.457,-1	.720,-1	.672,-1
13	-.770,-1	-.112,-1	.690,-2	-.047,-2	.125,-1	.530,-1	.697	-.186,-2	.641,-1	-.109,-1
14	-.545,-1	-.501,-1	.955,-1	-.157,-2	.140,-1	.150,-1	.699	-.880,-1	.765,-1	.511,-1
15	.252,-1	-.591,-1	-.981,-2	-.225,-1	.241,-2	.457,-1	.697	.509,-1	.577,-1	.167,-1
16	-.177,-1	-.152,-1	.196,-1	-.596,-1	-.410,-2	-.277,-1	.707	-.416,-2	.491,-1	-.225,-1
17	-.151,-1	-.969,-1	.295,-1	-.174,-1	-.525,-1	.699,-2	.694	.121,-1	.162,-1	.242,-1
18	.671,-2	.750,-2	-.205,-2	-.517,-1	-.275,-2	-.592,-1	.688	.551,-1	.584,-1	.182,-1
19	.275,-1	-.234,-1	-.470,-2	-.277,-1	.275,-1	.195,-1	.707	-.155,-1	.145,-1	.337,-1
20	.696,-1	.551,-1	-.242,-1	-.109,-1	-.141,-2	.222,-1	.674	-.506,-2	-.158,-1	.310,-1
21	.150,-1	.271,-1	-.690,-2	-.310,-1	-.409,-2	-.457,-1	.650	-.101,-1	.696,-2	.626,-1
22	.188,-1	.715,-1	.569,-1	-.155,-1	.521,-1	.920,-2	.724	-.660,-2	.726,-2	.760,-2
23	.297,-1	.900,-2	.650,-1	-.185,-1	.985,-1	-.550,-2	.696	-.750,-2	-.740,-2	.222,-1
24	-.525,-2	.290,-1	.178,-1	-.495,-1	-.101,-1	-.511,-1	.669	.454,-1	-.770,-2	-.196,-1
25	-.150,-1	-.114,-1	.280,-1	.511,-2	-.219,-1	.501,-2	.666	-.165,-1	.605,-1	-.215,-1
26	.217,-2	-.110,-1	.967,-1	-.500,-2	-.626,-1	-.621,-1	.648	-.604,-1	.282,-1	.110,-1
27	-.536,-1	-.157,-1	.610,-1	-.541,-1	-.207,-1	-.275,-1	.646	-.185,-1	-.165,-1	-.228,-1
28	-.515,-1	-.295,-1	.725,-2	.575,-2	.400,-2	-.542,-1	.649	-.165,-1	-.241,-1	-.150,-1
29	-.507,-1	-.615,-1	-.582,-1	-.140,-2	-.524,-1	-.110,-2	.661	-.141,-1	.530,-2	-.746,-1
30	.981,-1	-.991,-1	.447,-1	.171,-1	.534,-1	.559,-1	.650	-.202,-1	.509,-1	-.477,-1
31	-.511,-1	-.152,-1	-.207,-1	-.101,-1	.527,-1	-.149,-1	.647	-.120,-1	.255,-1	-.237,-1
32	-.645,-1	-.645,-1	-.615,-1	.391,-2	.602,-1	-.160,-2	.652	.109,-1	-.192,-1	.166,-1
33	-.509,-1	-.219,-1	-.171,-1	-.270,-2	.182,-1	.256,-1	.654	-.177,-1	.185,-1	.432,-2
34	.760,-2	.587,-1	.458,-1	.470,-2	.564,-1	-.197,-1	.609	-.110,-1	-.720,-2	-.115,-1
35	-.956,-1	.291,-1	.109,-1	-.266,-1	.445,-1	.545,-1	.656	-.531,-1	-.120,-1	.164,-1
36	.964,-1	.910,-1	.494,-1	.571,-1	.661,-1	-.720,-2	.656	-.985,-1	.112,-1	.968,-1
37	.514,-1	.155,-1	.439,-1	-.578,-1	.487,-1	-.958,-1	.612	-.276,-1	.829,-1	-.685,-1
38	.545,-1	.1 1,-1	.827,-1	.771,-1	.418,-1	-.660,-5	.620	-.620,-1	-.250,-1	-.509,-1
39	-.980,-1	-.994,-1	.608,-1	.166,-1	-.101,-1	-.924,-1	.561	-.465,-1	-.744,-2	-.172,-1
40	.777,-2	-.997,-1	.158,-1	.467,-1	.498,-1	-.159,-1	.565	-.581,-1	.186,-1	.459,-1
41	-.758,-2	-.915,-1	-.446,-1	.205,-1	.275,-1	-.406,-1	.562	-.120,-1	.510,-2	-.597,-1
42	-.119,-1	.677,-2	.208,-1	.251,-2	-.115,-1	-.909,-2	.509	-.969,-1	-.370,-2	.760,-2
43	-.119,-1	-.114,-1	.210,-5	-.208,-1	.160,-5	-.859,-1	.548	.770,-2	-.374,-1	-.156,-1
44	-.129,-2	-.860,-2	-.740,-5	.159,-1	-.210,-1	-.959,-1	.501	.504,-1	.160,-2	-.480,-1
45	-.480,-2	-.956,-1	-.599,-1	.216,-1	-.469,-1	.564,-1	.505	-.400,-4	.199,-1	.509,-2
46	.100,-1	-.966,-2	-.180,-2	-.151,-1	-.578,-1	.176,-1	.576	.670,-2	.546,-1	-.120,-1
47	-.107,-1	.805,-2	-.595,-1	-.4 0,-2	-.592,-1	.541,-1	.570	-.159,-1	.598,-1	.643,-1
48	.509,-1	-.955,-2	-.275,-1	-.100,-1	-.150,-1	.524,-2	.576	-.447,-1	.118,-1	.510,-1
49	.642,-1	-.242,-1	-.418,-1	.160,-1	-.255,-1	-.152,-1	.561	-.252,-1	.928,-1	.479,-1
50	-.309,-1	-.866,-1	-.640,-1	.505,-2	-.400,-2	-.175,-1	.255	.152,-1	.326,-1	.360,-2
51	-.567,-1	-.479,-1	-.568,-1	.155,-1	.107,-2	.447,-2	.525	.292,-1	.209,-1	.250,-1
52	-.433,-1	-.810,-1	-.199,-1	-.196,-1	-.860,-2	.491,-2	.509	.509,-1	.771,-1	.159,-1
53	-.245,-1	-.522,-1	.186,-1	-.150,-1	-.780,-2	-.178,-1	.209	-.737,-2	.599,-1	.361,-1
54	-.350,-1	-.540,-2	.204,-1	-.155,-1	.172,-1	.159,-1	.505	-.504,-1	.594,-1	.158,-1
55	.595,-1	-.351,-1	-.290,-1	.574,-2	.180,-1	-.500,-2	.210	-.152,-1	.847,-1	-.440,-2
56	.650,-2	.850,-2	.280,-1	.198,-1	.172,-1	.584,-1	.199	.575,-1	.186,-1	-.629,-2
57	.188,-1	-.134,-1	.412,-1	.561,-1	-.196,-1	.710,-1	.179	.488,-2	.240,-1	-.338,-1
58	-.107,-1	-.499,-1	.850,-2	.340,-1	.128,-2	.275,-1	.171	.638,-2	.498,-1	-.904,-2
59	-.398,-1	-.615,-1	-.301,-2	-.224,-1	.932,-2	.457,-1	.199	-.244,-1	.212,-1	.291,-1
60	-.434,-1	-.317,-1	.125,-1	-.607,-1	.502,-1	.800,-2	.187	.210,-2	-.351,-2	-.959,-2

Run No. 8 ; u component

	Separation Distance (m.)									
N	6	12	18	24	36	42	48	72	84	90
00	.697	.647	.594	.625	.591	.560	.457	.476	.445	.421
01	.695	.635	.585	.602	.585	.552	.429	.473	.436	.426
02	.701	.611	.587	.585	.575	.550	.414	.469	.450	.411
03	.687	.611	.569	.571	.547	.543	.398	.455	.411	.417
04	.664	.602	.560	.562	.534	.539	.388	.450	.415	.419
05	.655	.587	.555	.550	.526	.523	.375	.450	.412	.409
06	.640	.568	.546	.540	.506	.509	.360	.451	.406	.408
07	.627	.556	.541	.525	.479	.496	.351	.407	.392	.405
08	.608	.527	.527	.509	.461	.484	.341	.388	.386	.405
09	.585	.496	.518	.491	.459	.467	.333	.370	.380	.397
10	.555	.479	.502	.477	.422	.446	.326	.346	.375	.389
11	.537	.465	.486	.465	.412	.434	.316	.339	.370	.395
12	.515	.450	.470	.446	.402	.415	.296	.333	.365	.385
13	.496	.438	.475	.457	.385	.405	.287	.321	.360	.376
14	.482	.425	.467	.446	.376	.400	.278	.311	.354	.365
15	.467	.429	.460	.401	.356	.377	.277	.297	.316	.350
16	.465	.413	.447	.388	.348	.400	.264	.291	.300	.337
17	.469	.396	.446	.375	.369	.396	.264	.291	.294	.336
18	.475	.389	.446	.365	.356	.394	.262	.278	.290	.361
19	.478	.384	.441	.369	.364	.394	.264	.278	.309	.321
20	.464	.372	.447	.394	.374	.397	.270	.290	.311	.317
21	.452	.363	.437	.389	.348	.377	.275	.285	.312	.311
22	.457	.368	.436	.381	.341	.367	.268	.283	.321	.319
23	.447	.350	.425	.369	.330	.369	.268	.275	.311	.304
24	.441	.356	.427	.368	.325	.362	.269	.268	.307	.317
25	.430	.359	.422	.389	.365	.381	.278	.255	.298	.317
26	.435	.351	.415	.385	.362	.370	.278	.264	.297	.308
27	.435	.366	.406	.383	.361	.365	.268	.264	.305	.333
28	.431	.383	.394	.396	.365	.356	.268	.268	.304	.342
29	.429	.389	.396	.381	.365	.348	.279	.264	.320	.347
30	.425	.387	.376	.414	.359	.343	.275	.257	.309	.346
31	.418	.388	.360	.382	.335	.331	.273	.252	.323	.334
32	.400	.390	.358	.377	.345	.326	.265	.258	.296	.335
33	.389	.380	.370	.384	.358	.314	.275	.247	.298	.370
34	.381	.375	.370	.398	.347	.301	.274	.245	.289	.367
35	.371	.385	.350	.378	.337	.329	.276	.250	.292	.334
36	.373	.376	.347	.372	.326	.329	.275	.245	.295	.350
37	.378	.378	.346	.369	.324	.324	.273	.245	.291	.364
38	.376	.370	.346	.369	.328	.322	.275	.241	.291	.368
39	.368	.381	.348	.369	.329	.317	.264	.236	.290	.361
40	.372	.374	.346	.355	.325	.319	.259	.245	.275	.343
41	.371	.376	.340	.366	.319	.321	.256	.241	.275	.353
42	.369	.375	.335	.360	.319	.315	.255	.238	.266	.359
43	.361	.359	.341	.359	.320	.307	.247	.235	.267	.354
44	.368	.364	.337	.355	.326	.316	.264	.230	.269	.345
45	.361	.361	.344	.360	.330	.320	.264	.230	.270	.341
46	.343	.375	.341	.373	.340	.328	.273	.251	.276	.334
47	.356	.371	.351	.380	.330	.328	.275	.257	.301	.319
48	.335	.364	.347	.379	.325	.323	.270	.250	.295	.309
49	.338	.367	.346	.380	.332	.321	.268	.254	.296	.312
50	.335	.375	.343	.380,-1	.326	.320	.280	.250	.275	.319
51	.338	.370	.339	.381	.331	.324	.276	.250	.274	.314
52	.334	.374	.336	.380,-1	.330	.329	.272	.255	.276	.301
53	.327	.366	.333	.382	.331	.325	.270	.255	.284	.283
54	.323	.366	.330	.382	.330	.326	.269	.245	.280	.278
55	.319	.358	.331	.380,-1	.329	.321	.260	.255	.285	.281
56	.309	.354	.328	.380,-1	.322	.324	.257	.257	.280	.283
57	.305	.353	.329	.380,-1	.320	.319	.256	.255	.272	.256
58	.302	.349	.324	.382	.322	.317	.304	.257	.261	.272
59	.288	.349	.304	.382	.323	.306	.305	.255	.271	.266
60	.274	.355	.283	.384	.327	.320	.312	.278	.268	.252

Run No. 8 ; v component

	Separation Distance (m.)									
K	6	12	18	24	36	48	60	72	84	96
00	.875	.855	.815	.779	.724	.744	.691	.640	.636	.647
01	.869	.828	.811	.792	.728	.753	.687	.636	.630	.640
02	.849	.821	.807	.795	.739	.755	.692	.674	.627	.644
03	.829	.810	.807	.791	.736	.752	.674	.658	.618	.643
04	.809	.800	.787	.746	.740	.752	.677	.624	.617	.641
05	.793	.793	.779	.[illegible]	.744	.750	.676	.625	.616	.639
06	.777	.782	.769	.[illegible]	.747	.750	.675	.630	.615	.631
07	.767	.767	.765	.745	.749	.752	.671	.624	.615	.625
08	.761	.755	.760	.747	.752	.755	.670	.611	.606	.617
09	.751	.745	.746	.740	.755	.754	.668	.605	.609	.603
10	.746	.736	.740	.740	.750	.756	.661	.600	.590	.615
11	.735	.725	.730	.741	.744	.754	.657	.605	.595	.617
12	.730	.712	.727	.735	.745	.750	.648	.604	.595	.616
13	.716	.710	.720	.729	.739	.751	.643	.601	.598	.602
14	.706	.708	.717	.727	.736	.750	.655	.615	.599	.619
15	.702	.690	.710	.730	.737	.742	.654	.610	.590[illegible]	.612
16	.698	.679	.706	.734	.735	.743	.648	.608	.589	.614
17	.692	.671	.697	.728	.730	.731	.646	.598	.587	.613
18	.691	.666	.690	.725	.729	.741	.639	.596	.579	.611
19	.678	.666	.679	.727	.720	.739	.638	.591	.578	.609
20	.669	.656	.667	.724	.715	.730	.638	.591	.586	.598
21	.660	.649	.662	.722	.707	.730	.638	.591	.579	.590
22	.650	.637	.654	.720	.701	.715	.632	.578	.580	.581
23	.650	.628	.645	.716	.698	.706	.629	.570	.575	.566
24	.634	.616	.640	.706	.697	.704	.624	.567	.582	.568
25	.705,-1	.610	.636	.695	.698	.703	.621	.567	.586	.551
26	.686	.601	.629	.689	.675	.696	.620	.566	.583	.550
27	.618	.596	.618	.677	.661	.669	.618	.564	.576	.558
28	.616	.591	.607	.666	.666	.660	.571	.555	.574	.564
29	.599	.571	.598	.658	.636	.660	.568	.554	.574	.541
30	.588	.567	.594	.659	.625	.656	.556	.566	.[illegible]	.550
31	.574	.564	.588	.651	.615	.655	.563	.551	.[illegible]	.585
32	.565	.556	.578	.641	.606	.645	.555	.548	.[illegible]	.580
33	.564	.560	.570	.607	.596	.636	.564	.555	.[illegible]	.557
34	.561	.560	.561	.624	.595	.634	.564	.560	.[illegible]	.556
35	.555	.557	.554	.620	.581	.625	.565	.557	.[illegible]	.553
36	.546	.551	.548	.578	.576	.620	.561	.551	.[illegible]	.549
37	.545	.548	.548	.570	.575	.616	.560	.547	.[illegible]	.549
38	.545	.546	.545	.569	.564	.607	.559	.545	.[illegible]	.551
39	.555	.541	.556	.552	.548	.560	.555	.548	.[illegible]	.547
40	.539	.540	.555	.555	.550	.546	.550	.547	.[illegible]	.545
41	.537	.535	.529	.549	.548	.549	.548	.544	.[illegible]	.545
42	.526	.545	.527	.541	.548	.545	.545	.545	.[illegible]	.545
43	.515	.525	.525	.540	.548	.545	.542	.540	.[illegible]	.545
44	.508	.529	.519	.546	.555	.548	.541	.[illegible]	.[illegible]	.[illegible]
45	.506	.500	.512	.546	.547	.[illegible]	.[illegible]	.[illegible]	.[illegible]	.[illegible]
46	.[illegible]	.[illegible]	.[illegible]	.[illegible]	.[illegible]	.[illegible]	.[illegible]	.[illegible]	.[illegible]	.[illegible]
47	.[illegible]	.[illegible]	.[illegible]	.[illegible]	.[illegible]	.[illegible]	.[illegible]	.[illegible]	.[illegible]	.[illegible]
48	.491	.[illegible]	.[illegible]	.[illegible]	.[illegible]	.[illegible]	.[illegible]	.[illegible]	.[illegible]	.[illegible]
49	.487	.[illegible]	.[illegible]	.[illegible]	.[illegible]	.[illegible]	.[illegible]	.[illegible]	.[illegible]	.[illegible]
50	.[illegible]	.[illegible]	.[illegible]	.[illegible]	.[illegible]	.[illegible]	.[illegible]	.[illegible]	.[illegible]	.[illegible]
51	.[illegible]	.[illegible]	.[illegible]	.[illegible]	.[illegible]	.[illegible]	.[illegible]	.[illegible]	.[illegible]	.[illegible]
52	.[illegible]	.[illegible]	.[illegible]	.[illegible]	.[illegible]	.[illegible]	.[illegible]	.[illegible]	.[illegible]	.[illegible]
53	.[illegible]	.[illegible]	.[illegible]	.[illegible]	.[illegible]	.[illegible]	.[illegible]	.[illegible]	.[illegible]	.[illegible]
54	.[illegible]	.[illegible]	.[illegible]	.[illegible]	.[illegible]	.[illegible]	.[illegible]	.[illegible]	.[illegible]	.[illegible]
55	.[illegible]	.[illegible]	.[illegible]	.[illegible]	.[illegible]	.[illegible]	.[illegible]	.[illegible]	.[illegible]	.[illegible]
56	.[illegible]	.[illegible]	.[illegible]	.[illegible]	.[illegible]	.[illegible]	.[illegible]	.[illegible]	.[illegible]	.[illegible]
57	.[illegible]	.[illegible]	.[illegible]	.[illegible]	.[illegible]	.[illegible]	.[illegible]	.[illegible]	.[illegible]	.[illegible]
58	.[illegible]	.[illegible]	.[illegible]	.[illegible]	.[illegible]	.[illegible]	.[illegible]	.[illegible]	.[illegible]	.[illegible]
59	.[illegible]	.[illegible]	.[illegible]	.[illegible]	.[illegible]	.[illegible]	.[illegible]	.[illegible]	.[illegible]	.[illegible]
60	.438	.409	.429	.455	.493	.512	.456	.395	.396	.417

Run No. 8 ; w component

Separation Distance (m.)

K	6	12	18	24	36	42	48	72	84	90
00	-.978,-1	-.455,-1	-.104,-1	.270,-1	-.254,-2	-.355,-1		-.365,-1	-.342,-1	.100,-1
01	.356,-1	.148,-1	-.237,-1	.294,-1	.151,-1	.127,-1		-.435,-1	-.334,-1	.540,-2
02	-.290,-1	.421,-1	-.332,-1	.311,-1	.297,-2	.565,-1		-.105,-1	.484,-2	.132,-1
03	-.142,-1	-.595,-2	.351,-1	.140,-1	.347,-1	.158,-1		.228,-1	-.350,-3	-.604,-1
04	-.162,-1	.271,-1	.321,-1	.144,-2	.151,-1	.401,-1		.370,-2	-.411,-1	-.200,-3
05	.691,-1	.177,-1	-.252,-2	.806,-1	.169,-1	.334,-2		-.226,-1	.162,-1	-.355,-1
06	-.175,-1	.312,-2	.140,-2	.571,-2	.164,-1	.715,-2		.218,-1	-.511,-1	-.164,-1
07	-.351,-1	.648,-1	-.540,-2	.157,-1	.895,-2	-.824,-1		.330,-1	-.504,-1	-.187,-1
08	-.710,-2	.260,-1	-.546,-1	.272,-1	.228,-1	-.725,-2		.511,-2	-.275,-1	-.295,-1
09	-.644,-1	.157,-1	.208,-1	.420,-1	-.400,-3	-.309,-2		-.740,-2	-.451,-1	-.700,-2
10	-.691,-1	.525,-1	.445,-1	.491,-1	-.340,-1	.131,-1		.820,-2	.151,-1	-.409,-1
11	-.[illegible]	.640,-1	.274,-1	.161,-1	-.[illegible]	-.121,-1		-.545,-2	.172,-1	.530,-2
12	-.377,-1	-.940,-1	.217,-1	.300,-1	-.395, 1	.[illegible]		-.[illegible]	-.[illegible]	.409,-1
13	.157,-1	.598,-1	.115,-2	.[illegible]	-.[illegible]	-.[illegible]		.[illegible]	-.144,-1	.[illegible]
14	-.[illegible]	-.[illegible]	.[illegible]	.[illegible]	-.[illegible]	-.[illegible]		-.[illegible]	.125,-1	.[illegible]
15	-.[illegible]	.[illegible]	.[illegible]	.[illegible]	.[illegible]	-.[illegible]		-.[illegible]	.[illegible]	-.[illegible]
16	.[illegible]	.[illegible]	-.[illegible]	.[illegible]	-.[illegible]	-.[illegible]		-.[illegible]	-.[illegible]	.[illegible]
17	.[illegible]	.[illegible]	.[illegible]	.[illegible]	-.[illegible]	-.[illegible]		.[illegible]	.[illegible]	-.[illegible]
18	.[illegible]	-.[illegible]	-.[illegible]	.[illegible]	-.[illegible]	-.[illegible]		-.[illegible]	.[illegible]	-.[illegible]
19	-.[illegible]	.[illegible]	.[illegible]	.[illegible]	-.[illegible]	.[illegible]		.[illegible]	.[illegible]	.[illegible]
20	.[illegible]	.[illegible]	-.[illegible]	[illegible]	-.[illegible]	-.[illegible]		-.[illegible]	-.[illegible]	-.[illegible]
21	.[illegible]	.[illegible]	.[illegible]	-.[illegible]	-.[illegible]	.[illegible]		-.[illegible]	.[illegible]	-.[illegible]
22	.[illegible]	-.[illegible]	-.[illegible]	-.[illegible]	-.[illegible]	-.[illegible]		.[illegible]	-.[illegible]	.[illegible]
23	.[illegible]	-.[illegible]	-.[illegible]	.[illegible]	-.[illegible]	-.[illegible]		.[illegible]	-.[illegible]	.[illegible]
24	-.[illegible]	.[illegible]	.[illegible]	.[illegible]	-.[illegible]	.[illegible]		.[illegible]	.[illegible]	-.[illegible]
25	-.[illegible]	.[illegible]	.[illegible]	.[illegible]	-.[illegible]	-.[illegible]		.[illegible]	.[illegible]	.[illegible]
26	-.[illegible]	.[illegible]	.[illegible]	-.[illegible]	-.[illegible]	.[illegible]		-.[illegible]	-.[illegible]	.[illegible]
27	-.[illegible]	.[illegible]	.[illegible]	.[illegible]	-.[illegible]	.[illegible]		-.[illegible]	.[illegible]	.[illegible]
28	.[illegible]	.[illegible]	-.[illegible]	-.[illegible]	-.[illegible]	-.[illegible]		-.[illegible]	.[illegible]	-.[illegible]
29	.[illegible]	-.[illegible]	-.[illegible]	-.[illegible]	.[illegible]	-.[illegible]		.[illegible]	.[illegible]	-.[illegible]
30	.[illegible]	.[illegible]	-.[illegible]	.[illegible]	-.[illegible]	.[illegible]		.[illegible]	-.[illegible]	-.[illegible]
31	.[illegible]	.[illegible]	.[illegible]	-.[illegible]	.[illegible]	.[illegible]		-.[illegible]	.[illegible]	.[illegible]
32	.[illegible]	.[illegible]	-.[illegible]	.[illegible]	.[illegible]	.[illegible]		-.[illegible]	.[illegible]	.[illegible]
33	-.[illegible]	-.[illegible]	.[illegible]	-.[illegible]	.[illegible]	.[illegible]		.[illegible]	.[illegible]	.[illegible]
34	.[illegible]	.[illegible]	.[illegible]	-.[illegible]	.[illegible]	-.[illegible]		.[illegible]	-.[illegible]	-.[illegible]
35	.[illegible]	.[illegible]	.[illegible]	.[illegible]	-.[illegible]	.[illegible]		-.[illegible]	-.[illegible]	.[illegible]
36	.[illegible]	.[illegible]	.[illegible]	-.[illegible]	.[illegible]	.[illegible]		.[illegible]	.[illegible]	-.[illegible]
37	-.[illegible]	.[illegible]	-.[illegible]	.[illegible]	.[illegible]	.[illegible]		.[illegible]	.[illegible]	.[illegible]
38	-.[illegible]	.[illegible]	-.[illegible]	.[illegible]	.[illegible]	.[illegible]		.[illegible]	.[illegible]	-.[illegible]
39	.[illegible]	.[illegible]	-.[illegible]	.[illegible]	.[illegible]	.[illegible]		.[illegible]	.[illegible]	.[illegible]
40	-.[illegible]	.[illegible]	-.[illegible]	-.[illegible]	-.[illegible]	.[illegible]		.[illegible]	-.[illegible]	.[illegible]
41	.[illegible]	.[illegible]	.[illegible]	-.[illegible]	.[illegible]	.[illegible]		.[illegible]	.[illegible]	.[illegible]
42	-.[illegible]	-.[illegible]	-.[illegible]	-.[illegible]	.[illegible]	.[illegible]		.[illegible]	.[illegible]	.[illegible]
43	-.[illegible]	.[illegible]	.[illegible]	-.[illegible]	.[illegible]	.[illegible]		.[illegible]	-.[illegible]	.[illegible]
44	.[illegible]	.[illegible]	.[illegible]	.[illegible]	.[illegible]	-.[illegible]		.[illegible]	.[illegible]	.[illegible]
45	.[illegible]	.[illegible]	-.[illegible]	.[illegible]	-.[illegible]	-.[illegible]		.[illegible]	-.[illegible]	-.[illegible]
46	-.[illegible]	.[illegible]	.[illegible]	.[illegible]	.[illegible]	-.[illegible]		.[illegible]	-.[illegible]	.[illegible]
47	.[illegible]	-.[illegible]	-.[illegible]	.[illegible]	.[illegible]	.[illegible]		.[illegible]	-.[illegible]	.[illegible]
48	.[illegible]	-.[illegible]	-.[illegible]	-.[illegible]	.[illegible]	.[illegible]		-.[illegible]	-.[illegible]	.[illegible]
49	.[illegible]	-.[illegible]	-.[illegible]	-.[illegible]	.[illegible]	.[illegible]		.[illegible]	.[illegible]	.[illegible]
50	.[illegible]	.[illegible]	-.[illegible]	-.[illegible]	-.[illegible]	.[illegible]		.[illegible]	-.[illegible]	.[illegible]
51	-.[illegible]	.[illegible]	.[illegible]	.[illegible]	.[illegible]	-.[illegible]		.[illegible]	-.[illegible]	.[illegible]
52	-.[illegible]	-.[illegible]	.[illegible]	-.[illegible]	-.[illegible]	-.[illegible]		.[illegible]	-.[illegible]	.[illegible]
53	-.[illegible]	-.[illegible]	.[illegible]	.[illegible]	.[illegible]	.[illegible]		.[illegible]	-.[illegible]	-.[illegible]
54	.[illegible]	-.[illegible]	-.[illegible]	-.[illegible]	.[illegible]	-.[illegible]		.[illegible]	.[illegible]	-.[illegible]
55	-.[illegible]	.[illegible]	-.[illegible]	-.[illegible]	-.[illegible]	-.[illegible]		-.[illegible]	-.[illegible]	-.[illegible]
56	-.[illegible]	-.[illegible]	.[illegible]	.[illegible]	.[illegible]	.[illegible]		.[illegible]	-.[illegible]	.[illegible]
57	-.[illegible]	.[illegible]	.[illegible]	-.[illegible]	.[illegible]	.[illegible]		.[illegible]	.[illegible]	.[illegible]
58	.[illegible]	-.[illegible]	-.[illegible]	-.[illegible]	.[illegible]	-.[illegible]		.[illegible]	-.[illegible]	-.[illegible]
59	-.[illegible]	.[illegible]	.[illegible]	.[illegible]	-.[illegible]	-.[illegible]		.[illegible]	-.[illegible]	.[illegible]
60	.471,-1	-.[illegible]	-.480,-2	-.515,-1	.709,-1	-.207,-1		.845,-1	.270,-2	.568,-1

Run No. 10 ; u component

	Separation Distance (m.)									
m.	6	12	18	24	36	42	48	72	78	90
00	.801	.800	.720	.795	.799	.699	.652	.592	.561	.507
01	.825	.811	.751	.805	.774	.114	.657	.598	.551	.517
02	.847	.833	.757	.815	.744	.127	.664	.618	.559	.535
03	.872	.850	.757	.812	.805	.744	.667	.656	.550	.539
04	.859	.815	.772	.801	.804	.748	.677	.645	.597	.542
05	.856	.791	.735	.789	.791	.774	.679	.592	.608	.561
06	.820	.767	.726	.777	.797	.792	.675	.640	.618	.580
07	.778	.767	.711	.754	.770	.145	.679	.647	.617	.542
08	.775	.734	.774	.755	.755	.770	.685	.648	.615	.605
09	.760	.715	.707	.751	.755	.755	.695	.645	.617	.615
10	.725	.678	.747	.706	.716	.770	.690	.640	.618	.615
11	.705	.657	.722	.678	.696	.753	.691	.646	.624	.619
12	.691	.657	.721	.670	.678	.734	.692	.640	.622	.646
13	.676	.657	.705	.665	.665	.716	.696	.652	.625	.637
14	.671	.656	.695	.644	.645	.705	.695	.656	.620	.657
15	.668	.650	.678	.631	.650	.697	.700	.726	.606	.654
16	.655	.597	.657	.597	.615	.696	.698	.699	.596	.650
17	.650	.595	.640	.595	.600	.695	.696	.711	.575	.652
18	.627	.596	.632	.582	.575	.670	.695	.676	.592	.650
19	.615	.586	.624	.591	.582	.665	.696	.690	.595	.647
20	.578	.591	.625	.590	.581	.651	.684	.591	.594	.601
21	.580	.594	.614	.626	.610	.655	.699	.595	.611	.577
22	.599	.594	.597	.610	.629	.695	.694	.696	.625	.557
23	.585	.610	.595	.624	.616	.674	.699	.704	.629	.556
24	.592	.607	.576	.621	.629	.691	.700	.697	.624	.560
25	.619	.605	.597	.644	.640	.680	.670	.696	.632	.606
26	.608	.601	.601	.635	.640	.687	.695	.696	.615	.635
27	.607	.601	.595	.625	.635	.696	.681	.670	.632	.625
28	.607	.605	.581	.612	.625	.627	.687	.675	.607	.629
29	.602	.604	.585	.615	.617	.607	.695	.695	.625	.607
30	.617	.627	.609	.571	.610	.670	.598	.655	.616	.644
31	.579	.615	.620	.550	.609	.619	.575	.625	.606	.655
32	.577	.597	.601	.551	.591	.650	.595	.615	.589	.649
33	.565	.581	.605	.612	.577	.660	.597	.595	.596	.662
34	.565	.585	.605	.590	.565	.614	.591	.595	.596	.649
35	.597	.608	.605	.600	.585	.645	.595	.577	.577	.610
36	.572	.595	.595	.586	.595	.635	.597	.567	.570	.601
37	.600	.595	.570	.602	.606	.626	.596	.595	.595	.607
38	.607	.585	.580	.601	.578	.601	.587	.591	.595	.601
39	.597	.585	.585	.600	.601	.599	.595	.587	.595	.600
40	.596	.600	.590	.590	.600	.595	.595	.595	.588	.595
41	.595	.595	.595	.589	.594	.595	.595	.590	.590	.595
42	.594	.595	.600	.575	.602	.600	.597	.590	.597	.595
43	.596	.596	.577	.601	.601	.601	.591	.594	.595	.576
44	.600	.599	.594	.590	.595	.594	.601	.591	.596	.601
45	.598	.577	.592	.599	.607	.655	.597	.602	.590	.598
46	.596	.600	.590	.592	.600	.595	.595	.595	.596	.597
47	.605	.596	.600	.596	.596	.597	.602	.605	.604	.596
48	.596	.596	.601	.577	.596	.595	.605	.602	.600	.601
49	.600	.596	.600	.590	.595	.594	.596	.600	.601	.595
50	.596	.600	.597	.601	.596	.601	.599	.597	.596	.598
51	.595	.596	.596	.596,-1	.592	.602	.600	.596	.594	.596
52	.599	.596	.595	.592,-1	.595	.597	.597	.598	.597	.598
53	.597	.597	.597	.579,-1	.602	.600	.597	.600	.595	.596
54	.597	.595	.595	.594,-1	.597,-1	.594	.595	.597	.595	.596
55	.596	.595	.596	.599,-1	.596,-1	.600	.597	.596	.595	.598
56	.596	.597,-1	.596	.597,-1	.596,-1	.596	.597	.596	.596	.596
57	.599	.597,-1	.597	.597,-1	.596,-1	.596	.596	.596	.596	.596
58	.599	.597,-1	.600	.597,-1	.596,-1	.596	.596	.596	.596	.596
59	.599	.597,-1	.596	.596,-1	.596,-1	.596	.596	.596	.596	.596
60	.599	.600,-1	.600	.597,-1	.596,-1	.596	.596	.596	.596	.596

Run No. 10 ; v component

	Separation Distance (m.)									
K	6	12	18	24	36	42	48	72	84	96
00	.842	.807	.748	.765	.691	.670	.666	.595	.592	.546
01	.875	.850	.762	.740	.710	.695	.677	.546	.545	.557
02	.857	.847	.735	.815	.741	.710	.682	.606	.538	.570
03	.828	.808	.805	.824	.761	.722	.693	.610	.619	.580
04	.789	.748	.791	.821	.751	.731	.705	.611	.621	.542
05	.755	.725	.775	.800	.756	.741	.706	.627	.626	.602
06	.717	.676	.732	.795	.751	.728	.705	.631	.626	.606
07	.691	.654	.690	.756	.742	.732	.709	.636	.631	.611
08	.664	.640	.660	.719	.732	.735	.715	.642	.631	.625
09	.657	.647	.658	.686	.710	.715	.705	.641	.630	.623
10	.650	.630	.626	.656	.695	.695	.697	.656	.635	.627
11	.638	.643	.604	.657	.670	.675	.686	.651	.641	.637
12	.605	.576	.586	.620	.650	.650	.661	.651	.641	.636
13	.595	.582	.569	.594	.627	.637	.649	.655	.645	.631
14	.575	.555	.551	.581	.607	.620	.636	.661	.642	.639
15	.555	.501	.535	.565	.591	.617	.625	.662	.649	.635
16	.536	.520	.531	.550	.576	.596	.612	.659	.650	.653
17	.521	.507	.516	.537	.555	.581	.597	.658	.655	.657
18	.510	.504	.503	.527	.544	.561	.580	.654	.654	.657
19	.498	.492	.491	.515	.533	.551	.565	.655	.657	.661
20	.487	.484	.482	.504	.523	.541	.557	.656	.659	.664
21	.480	.477	.473	.493	.476	.531	.547	.656	.659	.664
22	.474	.469	.466	.484	.492	.521	.540	.653	.659	.666
23	.471	.464	.460	.480	.485	.475	.476	.654	.657	.669
24	.471	.468	.461	.479	.490	.495	.475	.655	.657	.670
25	.477	.475	.471	.487	.490	.490	.490	.657	.660	.667
26	.480	.479	.476	.486	.485	.487	.475	.661	.665	.668
27	.483	.482	.480	.490	.486	.485	.480	.661	.664	.665
28	.487	.486	.484	.491	.486	.486	.481	.662	.667	.664
29	.491	.489	.487	.493	.488	.488	.481	.664	.668	.664
30	.494	.492	.490	.496	.491	.490	.487	.666	.668	.664
31	.497	.496	.494	.499	.494	.494	.494	.667	.671	.665
32	.500	.497	.496	.502	.497	.497	.497	.668	.671	.667
33	.502	.501	.500	.504	.501	.501	.501	.670	.673	.668
34	.504	.503	.502	.506	.503	.503	.503	.671	.674	.669
35	.505	.504	.504	.508	.504	.504	.504	.672	.675	.670
36	.506	.505	.505	.509	.505	.505	.505	.673	.676	.671
37	.507	.506	.506	.510	.506	.506	.506	.674	.677	.672
38	.508	.507	.507	.511	.507	.507	.507	.675	.678	.673
39	.509	.508	.508	.512	.508	.508	.508	.676	.679	.674
40	.510	.509	.509	.513	.509	.509	.509	.677	.680	.675
41	.511	.510	.510	.514	.510	.510	.510	.678	.681	.676
42	.512	.511	.511	.515	.511	.511	.511	.679	.682	.677
43	.513	.512	.512	.516	.512	.512	.512	.680	.683	.678
44	.514	.513	.513	.517	.513	.513	.513	.681	.684	.679
45	.515	.514	.514	.518	.514	.514	.514	.682	.685	.680
46	.516	.515	.515	.519	.515	.515	.515	.683	.686	.681
47	.517	.516	.516	.520	.516	.516	.516	.684	.687	.682
48	.518	.517	.517	.521	.517	.517	.517	.685	.688	.683
49	.519	.518	.518	.522	.518	.518	.518	.686	.689	.684
50	.520	.519	.519	.523	.519	.519	.519	.687	.690	.685
51	.521	.520	.520	.524	.520	.520	.520	.688	.691	.686
52	.522	.521	.521	.525	.521	.521	.521	.689	.692	.687
53	.523	.522	.522	.526	.522	.522	.522	.690	.693	.688
54	.524	.523	.523	.527	.523	.523	.523	.691	.694	.689
55	.525	.524	.524	.528	.524	.524	.524	.692	.695	.690
56	.526	.525	.525	.529	.525	.525	.525	.693	.696	.691
57	.527	.526	.526	.530	.526	.526	.526	.694	.697	.692
58	.528	.527	.527	.531	.527	.527	.527	.695	.698	.693
59	.529	.528	.528	.532	.528	.528	.528	.696	.699	.694
60	.530	.529	.529	.533	.529	.529	.529	.697	.700	.695
61	.531	.530	.530	.534	.530	.530	.530	.698	.701	.696
62	.532	.531	.531	.535	.531	.531	.531	.699	.702	.697
63	.533	.532	.532	.536	.532	.532	.532	.700	.703	.698
64	.534	.533	.533	.537	.533	.533	.533	.701	.704	.699
65	.535	.534	.534	.538	.534	.534	.534	.702	.705	.700
66	.536	.535	.535	.539	.535	.535	.535	.703	.706	.701
67	.537	.536	.536	.540	.536	.536	.536	.704	.707	.702
68	.538	.537	.537	.541	.537	.537	.537	.705	.708	.703
69	.539	.538	.538	.542	.538	.538	.538	.706	.709	.704
70	.540	.539	.539	.543	.539	.539	.539	.707	.710	.705
71	.541	.540	.540	.544	.540	.540	.540	.708	.711	.706
72	.542	.541	.541	.545	.541	.541	.541	.709	.712	.707
73	.543	.542	.542	.546	.542	.542	.542	.710	.713	.708
74	.544	.543	.543	.547	.543	.543	.543	.711	.714	.709
75	.545	.544	.544	.548	.544	.544	.544	.712	.715	.710
76	.546	.545	.545	.549	.545	.545	.545	.713	.716	.711
77	.547	.546	.546	.550	.546	.546	.546	.714	.717	.712
78	.548	.547	.547	.551	.547	.547	.547	.715	.718	.713
79	.549	.548	.548	.552	.548	.548	.548	.716	.719	.714
80	.550	.549	.549	.553	.549	.549	.549	.717	.720	.715
81	.551	.550	.550	.554	.550	.550	.550	.718	.721	.716
82	.552	.551	.551	.555	.551	.551	.551	.719	.722	.717
83	.553	.552	.552	.556	.552	.552	.552	.720	.723	.718
84	.554	.553	.553	.557	.553	.553	.553	.721	.724	.719
85	.555	.554	.554	.558	.554	.554	.554	.722	.725	.720
86	.556	.555	.555	.559	.555	.555	.555	.723	.726	.721
87	.557	.556	.556	.560	.556	.556	.556	.724	.727	.722
88	.558	.557	.557	.561	.557	.557	.557	.725	.728	.723
89	.559	.558	.558	.562	.558	.558	.558	.726	.729	.724
90	.560	.559	.559	.563	.559	.559	.559	.727	.730	.725
91	.561	.560	.560	.564	.560	.560	.560	.728	.731	.726
92	.562	.561	.561	.565	.561	.561	.561	.729	.732	.727
93	.563	.562	.562	.566	.562	.562	.562	.730	.733	.728
94	.564	.563	.563	.567	.563	.563	.563	.731	.734	.729
95	.565	.564	.564	.568	.564	.564	.564	.732	.735	.730
96	.566	.565	.565	.569	.565	.565	.565	.733	.736	.731
97	.567	.566	.566	.570	.566	.566	.566	.734	.737	.732
98	.568	.567	.567	.571	.567	.567	.567	.735	.738	.733
99	.569	.568	.568	.572	.568	.568	.568	.736	.739	.734
00	.570	.569	.569	.573	.569	.569	.569	.737	.740	.735

Run No. 13 : u component

Separation Distance (m.)

K.	6	12	18	24	36	48	60	72	84	90
00	.952	.918	.911	.906	.919	.987	.898	.865	.891	.895
01	.937	.919	.921	.907	.920	.925	.891	.866	.879	.897
02	.940	.916	.922	.907	.922	.928	.886	.852	.875	.895
03	.944	.911	.920	.905	.920	.924	.886	.851	.869	.890
04	.940	.912	.920	.905	.918	.921	.892	.854	.867	.891
05	.935	.911	.921	.903	.916	.921	.884	.855	.868	.890
06	.937	.91[illegible]	.921	.903	.919	.920	.892	.852	.861	.889
07	.939	.913	.921	.897	.920	.923	.895	.846	.854	.880
08	.940	.907	.920	.898	.920	.924	.878	.853	.848	.878
09	.939	.907	.921	.900	.916	.920	.876	.845	.850	.876
10	.941	.895	.918	.898	.916	.922	.876	.851	.855	.875
11	.940	.898	.919	.898	.899	.919	.874	.855	.855	.875
12	.940	.895	.920	.898	.899	.917	.870	.849	.851	.875
13	.939	.900	.920	.898	.897	.911	.874	.849	.850	.876
14	.940	.874	.917	.896	.898	.917	.871	.841	.848	.870
15	.941	.865	.918	.895	.898	.916	.872	.844	.849	.868
16	.937	.855	.901	.893	.897	.894	.874	.852	.851	.868
17	.935	.891	.915	.894	.896	.896	.856	.857	.846	.861
18	.940	.880	.897	.896	.891	.893	.858	.859	.851	.863
19	.937	.859	.896	.895	.891	.897	.857	.856	.847	.892
20	.934	.868	.870	.894	.895	.894	.855	.848	.853	.861
21	.940	.891	.879	.894	.895	.896	.858	.850	.848	.868
22	.943	.855	.871	.894	.895	.893	.856	.850	.845	.871
23	.945	.855	.862	.895	.894	.895	.851	.850	.851	.868
24	.945	.850	.870	.875	.894	.898	.859	.848	.853	.869
25	.939	.866	.905	.878	.877	.898	.855	.838	.855	.891
26	.937	.867	.894	.885	.879	.898	.856	.845	.850	.899
27	.939	.868	.897	.894	.877	.897	.858	.848	.850	.850
28	.850	.868	.898	.894	.879	.896	.850	.846	.851	.868
29	.947	.854	.896	.893	.878	.898	.868	.847	.858	.858
30	.946	.859	.893	.887	.870	.891	.855	.848	.848	.857
31	.944	.855	.894	.890	.865	.879	.850	.848	.850	.855
32	.941	.897	.891	.893	.887	.885	.851	.849	.850	.855
33	.943	.887	.895	.895	.887	.895	.854	.848	.846	.852
34	.941	.895	.895	.891	.894	.893	.864	.847	.849	.868
35	.947	.881	.891	.887	.894	.897	.860	.841	.815	.867
36	.954	.880	.891	.890	.891	.877	.858	.844	.841	.866
37	.946	.881	.897	.894	.887	.875	.855	.835	.850	.867
38	.950	.881	.894	.895	.888	.894	.855	.846	.846	.867
39	.947	.879	.895	.895	.891	.890	.858	.847	.851	.868
40	.946	.895	.895	.898	.894	.894	.858	.850	.851	.868
41	.948	.897	.896	.896	.895	.895	.858	.846	.841	.866
42	.945	.895	.895	.894	.897	.895	.858	.844	.847	.871
43	.952	.898	.898	.897	.898	.894	.858	.846	.851	.870
44	.950	.897	.894	.895	.898	.895	.858	.846	.845	.869
45	.947	.870	.896	.895	.894	.897	.858	.859	.858	.868
46	.805	.898	.895	.897	.892	.896	.857	.857	.860	.866
47	.897	.901	.895	.897	.890	.894	.859	.858	.858	.865
48	.891	.895	.896	.897	.891	.898	.877	.877	.858	.866
49	.890	.895	.895	.895	.898	.896	.870	.870	.890	.869
50	.887	.890	.895	.897	.897	.895	.871	.861	.870	.867
51	.889	.890	.896	.898	.898	.898	.871	.862	.879	.895
52	.896	.897	.896	.898	.890	.894	.870	.858	.858	.895
53	.898	.898	.898	.897	.890	.894	.860	.861	.858	.894
54	.896	.899	.898	.897	.898	.894	.870	.860	.860	.894
55	.898	.894	.897	.897	.898	.894	.870	.859	.860	.894
56	.894	.898	.896	.897	.898	.894	.870	.858	.860	.894
57	.895	.899	.898	.897	.898	.894	.870	.858	.860	.894
58	.894	.895	.897	.895	.894	.894	.870	.858	.860	.894
59	.891	.890	.898	.894	.894	.897	.870	.858	.860	.894
60	.891	.899	.898	.894	.894	.895	.855	.861	.849	.870

Run No. 13 ; v component

Separation Distance (s.)

K	6	12	18	24	36	42	48	72	84	90
00	.875	.876	.897	.915	.893	.924	.755	.745	.756	.756
01	.879	.869	.891	.909	.892	.919	.754	.746	.758	.761
02	.890	.890	.881	.910	.891	.920	.764	.745	.745	.746
03	.889	.890	.880	.905	.896	.914	.765	.750	.749	.751
04	.880	.878	.885	.904	.897	.915	.761	.745	.749	.752
05	.879	.877	.879	.896	.878	.907	.754	.750	.759	.752
06	.891	.894	.882	.890	.879	.906	.756	.757	.755	.754
07	.869	.865	.882	.890	.875	.901	.761	.749	.737	.715
08	.894	.894	.877	.898	.870	.901	.751	.750	.752	.715
09	.885	.882	.887	.886	.884	.895	.750	.740	.786	.719
10	.886	.896	.888	.898	.897	.898	.760	.755	.750	.789
11	.899	.897	.890	.901	.896	.890	.759	.758	.755	.780
12	.895	.892	.894	.875	.891	.876	.762	.759	.758	.719
13	.895	.899	.894	.871	.891	.902	.765	.758	.716	.718
14	.814	.891	.890	.870	.884	.910	.764	.752	.706	.718
15	.890	.892	.898	.895	.895	.906	.764	.755	.705	.712
16	.899	.890	.895	.900	.895	.897	.774	.756	.709	.697
17	.891	.887	.894	.894	.894	.884	.717	.716	.717	.704
18	.800	.885	.895	.896	.894	.895	.713	.706	.718	.700
19	.891	.886	.895	.897	.891	.890	.710	.714	.713	.694
20	.790	.896	.892	.896	.891	.891	.736	.715	.661	.686
21	.796	.892	.893	.895	.892	.887	.700	.710	.701	.690
22	.897	.897	.908	.895	.896	.890	.705	.708	.698	.689
23	.791	.797	.900	.896	.898	.896	.706	.689	.709	.690
24	.798	.800	.898	.897	.897	.898	.697	.709	.698	.679
25	.797	.797	.898	.896	.894	.895	.696	.699	.692	.680
26	.791	.791	.898	.895	.891	.898	.688	.695	.678	.676
27	.790	.797	.896	.898	.895	.891	.688	.687	.687	.675
28	.791	.796	.891	.897	.891	.898	.679	.695	.685	.682
29	.796	.790	.791	.898	.895	.898	.674	.698	.675	.667
30	.798	.777	.898	.892	.891	.896	.698	.675	.671	.698
31	.791	.776	.777	.896	.898	.897	.699	.698	.678	.696
32	.797	.797	.779	.891	.895	.891	.677	.699	.675	.697
33	.796	.795	.795	.774	.898	.896	.679	.696	.698	.690
34	.795	.796	.798	.892	.895	.899	.678	.695	.698	.690
35	.790	.791	.796	.791	.797	.797	.698	.695	.696	.690
36	.798	.791	.790	.791	.795	.791	.696	.696	.697	.697
37	.716	.795	.798	.796	.795	.796	.695	.690	.696	.691
38	.715	.790	.796	.795	.791	.795	.698	.697	.698	.693
39	.716	.796	.791	.796	.795	.797	.698	.696	.698	.690
40	.718	.797	.798	.795	.791	.796	.691	.691	.697	.694
41	.701	.795	.796	.797	.796	.795	.691	.698	.696	.697
42	.697	.791	.787	.797	.795	.795	.698	.697	.691	.698
43	.698	.795	.797	.796	.797	.795	.698	.690	.697	.699
44	.693	.790	.795	.796	.796	.795	.699	.698	.699	.693
45	.695	.709	.715	.718	.791	.797	.695	.698	.696	.695
46	.696	.706	.707	.706	.717	.791	.695	.699	.696	.698
47	.698	.709	.696	.708	.711	.715	.697	.697	.698	.698
48	.695	.706	.695	.699	.707	.710	.697	.698	.698	.991
49	.696	.700	.696	.698	.708	.706	.699	.699	.698	.990
50	.691	.690	.698	.698	.696	.698	.698	.696	.690	.995
51	.691	.695	.698	.697	.696	.696	.698	.698	.697	.990
52	.698	.693	.695	.698	.695	.695	.698	.698	.697	.995
53	.695	.690	.698	.699	.696	.699	.698	.998	.698	.998
54	.691	.695	.698	.696	.697	.698	.998	.996	.696	.577
55	.698	.696	.698	.699	.697	.697	.993	.998	.698	.990
56	.690	.696	.695	.695	.691	.691	.998	.998	.691	.566
57	.690	.696	.697	.699	.698	.695	.996	.998	.693	.998
58	.695	.696	.698	.696	.698	.693	.996	.998	.990	.961
59	.997	.697	.997	.696	.690	.697	.995	.996	.995	.997
60	.996	.996	.699	.698	.699	.693	.997	.995	.997	.993

Run No. 16 ; u component

	Separation Distance (m.)									
K	6	12	18	24	36	42	48	72	84	90
00	.748	.735	.696	.587	.516	.498	.496	.332	.318	.295
01	.819	.779	.718	.621	.545	.532	.506	.356	.325	.297
02	.819	.796	.740	.660	.568	.562	.519	.395	.351	.306
03	.778	.802	.767	.695	.593	.588	.537	.372	.346	.328
04	.767	.810	.754	.707	.621	.611	.564	.379	.364	.338
05	.686	.799	.755	.715	.642	.621	.583	.394	.377	.351
06	.641	.741	.734	.720	.673	.651	.606	.411	.390	.373
07	.592	.704	.706	.705	.684	.667	.626	.422	.400	.393
08	.551	.660	.667	.714	.677	.672	.642	.454	.424	.424
09	.503	.619	.618	.696	.675	.670	.646	.479	.447	.452
10	.470	.554	.594	.692	.675	.658	.647	.504	.459	.470
11	.445	.520	.591	.678	.646	.653	.640	.532	.472	.475
12	.401	.487	.517	.640	.651	.645	.631	.560	.494	.485
13	.365	.450	.485	.605	.651	.636	.615	.578	.508	.497
14	.357	.419	.460	.565	.632	.615	.601	.587	.510	.507
15	.331	.396	.411	.533	.594	.591	.577	.586	.534	.518
16	.321	.355	.391	.490	.567	.559	.576	.579	.542	.529
17	.276	.330	.354	.442	.531	.536	.565	.591	.542	.550
18	.269	.304	.329	.405	.497	.515	.547	.551	.546	.554
19	.256	.291	.295	.365	.463	.496	.531	.555	.564	.547
20	.245	.255	.271	.332	.432	.456	.516	.529	.545	.540
21	.241	.250	.277	.329	.402	.430	.491	.511	.536	.541
22	.246	.243	.255	.331	.375	.410	.478	.497	.526	.525
23	.259	.241	.245	.337	.362	.390	.455	.478	.512	.513
24	.255	.255	.246	.350	.350	.393	.444	.470	.503	.516
25	.261	.257	.246	.347	.336	.355	.427	.461	.488	.500
26	.267	.251	.251	.340	.308	.324	.417	.461	.467	.508
27	.271	.255	.255	.341	.291	.309	.418	.450	.457	.495
28	.277	.259	.260	.336	.285	.292	.399	.440	.446	.467
29	.276	.265	.261	.334	.274	.291	.370	.417	.432	.446
30	.267	.268	.274	.329	.272	.290	.361	.399	.418	.475
31	.258	.256	.275	.329	.258	.284	.343	.381	.405	.457
32	.250	.255	.275	.325	.260	.275	.327	.376	.392	.437
33	.241	.257	.257	.321	.260	.265	.315	.370	.389	.419
34	.237	.260	.252	.320	.256	.261	.309	.365	.377	.405
35	.210	.247	.250	.294	.257	.277	.295	.324	.359	.348
36	.208	.234	.217	.270	.241	.267	.285	.337	.337	.369
37	.194	.225	.220	.256	.249	.255	.276	.342	.331	.357
38	.190	.211	.195	.251	.245	.251	.265	.320	.333	.335
39	.196	.194	.194	.245	.247	.247	.250	.309	.334	.333
40	.181	.197	.181	.238	.230	.242	.248	.240	.318	.344
41	.166	.181	.184	.235	.236	.229	.236	.224	.305	.336
42	.151	.164	.168	.232	.232	.225	.224	.221	.295	.326
43	.145	.162	.158	.207	.232	.216	.214	.214	.275	.317
44	.129	.151	.140	.197	.225	.205	.210	.210	.268	.310
45	.114	.140	.139	.171	.207	.201	.217	.217	.257	.311
46	.099,-1	.129	.121	.171	.189	.197	.209	.205	.255	.291
47	.080,-1	.120	.115	.161	.175	.197	.200	.205	.251	.284
48	.078,-1	.115	.110	.156	.164	.178	.211	.215	.245	.256
49	.710,-1	.110	.104	.155	.158	.164	.210	.215	.241	.252
50	.629,-1	.896,-1	.845,-1	.150	.152	.153	.210	.205	.242	.231
51	.469,-1	.779,-1	.694,-1	.757	.146	.145	.200	.204	.232	.255
52	.575,-1	.655,-1	.550,-1	.152	.139	.140	.206	.205	.227	.242
53	.898,-1	.461,-1	.441,-1	.150	.132	.134	.204	.227	.231	.229
54	.627,-2	.357,-1	.314,-1	.117	.115	.115	.207	.209	.249	.242
55	-.590,-2	.100,-1	.038,-1	.098,-1	.102	.102	.201	.205	.255	.235
56	-.165,-1	.742,-2	.192,-1	.831,-1	.988,-1	.847,-1	.206	.201	.257	.233
57	-.247,-1	-.738,-2	-. 1,-2	.655,-1	.885,-1	.675,-1	.209	.201	.253	.228
58	-.300,-1	-.157,-1	-.102,-1	.537,-1	.673,-1	.615,-1	.215	.238	.244	.230
59	-.365,-1	-.255,-1	-.250,-1	.407,-1	.397,-1	.544,-1	.214	.202	.241	.232
60	-.350,-1	-.307,-1	-.331,-1	.446,-1	.142,-1	.318,-1	.201	.268	.240	.227

Run No. 16 ; v component

	Separation distance (m.)									
K	6	12	18	24	36	42	48	72	84	90
00	.837	.846	.853	.809	.755	.764	.694	.660	.625	.655
01	.823	.865	.824	.820	.761	.775	.700	.670	.631	.666
02	.801	.878	.819	.832	.756	.776	[illegible]	.677	.655	.660
03	.775	.889	.806	.840	.760	.782	.7[illegible]	.684	.653	.670
04	.752	.879	.797	.851	.791	.780	.718	.689	.648	.675
05	.755	.870	.799	.861	.748	.786	.721	.700	.660	.685
06	.780	.867	.771	.864	.809	.789	.731	.705	.654	.688
07	.705	.869	.744	.866	.814	.789	.737	.710	.658	.680
08	.698	.819	.727	.861	.820	.778	.739	.707	.671	.668
09	.686	.798	.716	.848	.819	.769	.742	.709	.660	.690
10	.679	.778	.698	.829	.817	.755	.740	.711	.671	.689
11	.678	.769	.678	.815	.809	.746	.744	.[illegible]	.675	.679
12	.665	.745	.677	.799	.800	.750	.751	.721	.678	.678
13	.650	.758	.666	.787	.787	.761	.755	.730	.677	.665
14	.642	.725	.661	.775	.774	.759	.755	.732	.674	.654
15	.630	.709	.655	.761	.765	.705	.760	.729	.671	.652
16	.609	.696	.645	.756	.757	.697	.761	.735	.668	.644
17	.618	.694	.644	.758	.744	.679	.[illegible]	.730	.677	.[illegible]
18	.607	.678	.655	.724	.737	.662	.[illegible]	.716	.675	.[illegible]
19	.598	.667	.[illegible]	.716	.735	.661	.[illegible]	.709	.667	.[illegible]
20	.581	.660	.685	.708	.729	.634	.[illegible]	.[illegible]	.662	.[illegible]
21	.581	.650	.[illegible]	.[illegible]	.[illegible]	.[illegible]	.[illegible]	.[illegible]	.[illegible]	.[illegible]
22	.581	.650	.647	.[illegible]	.[illegible]	.[illegible]	.[illegible]	.[illegible]	.[illegible]	.[illegible]
23	.581	.655	.647	.[illegible]	.[illegible]	.[illegible]	.[illegible]	.[illegible]	.[illegible]	.[illegible]
24	.575	.[illegible]	.[illegible]	.[illegible]	.[illegible]	.[illegible]	.[illegible]	.[illegible]	.[illegible]	.[illegible]
25	.567	.[illegible]	.[illegible]	.[illegible]	.[illegible]	.[illegible]	.[illegible]	.[illegible]	.[illegible]	.[illegible]
26	.569	.[illegible]	.[illegible]	.[illegible]	.[illegible]	.[illegible]	.[illegible]	.[illegible]	.[illegible]	.[illegible]
27	.557	.[illegible]	.[illegible]	.[illegible]	.[illegible]	.[illegible]	.[illegible]	.[illegible]	.[illegible]	.[illegible]
28	.555	.[illegible]	.[illegible]	.[illegible]	.[illegible]	.[illegible]	.[illegible]	.[illegible]	.[illegible]	.[illegible]
29	.546	.[illegible]	.[illegible]	.[illegible]	.[illegible]	.[illegible]	.[illegible]	.[illegible]	.[illegible]	.[illegible]
30	.548	.[illegible]	.[illegible]	.[illegible]	.[illegible]	.[illegible]	.[illegible]	.[illegible]	.[illegible]	.[illegible]
31	.[illegible]	.[illegible]	.[illegible]	.[illegible]	.[illegible]	.[illegible]	.[illegible]	.[illegible]	.[illegible]	.[illegible]
32	.519	.[illegible]	.[illegible]	.[illegible]	.[illegible]	.[illegible]	.[illegible]	.[illegible]	.[illegible]	.[illegible]
33	.510	.[illegible]	.[illegible]	.[illegible]	.[illegible]	.[illegible]	.[illegible]	.[illegible]	.[illegible]	.[illegible]
34	.497	.[illegible]	.[illegible]	.[illegible]	.[illegible]	.[illegible]	.[illegible]	.[illegible]	.[illegible]	.[illegible]
35	.[illegible]	.[illegible]	.[illegible]	.[illegible]	.[illegible]	.[illegible]	.[illegible]	.[illegible]	.[illegible]	.[illegible]
36	.[illegible]	.[illegible]	.[illegible]	.[illegible]	.[illegible]	.[illegible]	.[illegible]	.[illegible]	.[illegible]	.[illegible]
37	.[illegible]	.[illegible]	.[illegible]	.[illegible]	.[illegible]	.[illegible]	.[illegible]	.[illegible]	.[illegible]	.[illegible]
38	.[illegible]	.[illegible]	.[illegible]	.[illegible]	.[illegible]	.[illegible]	.[illegible]	.[illegible]	.[illegible]	.[illegible]
39	.[illegible]	.[illegible]	.[illegible]	.[illegible]	.[illegible]	.[illegible]	.[illegible]	.[illegible]	.[illegible]	.[illegible]
40	.[illegible]	.[illegible]	.[illegible]	.[illegible]	.[illegible]	.[illegible]	.[illegible]	.[illegible]	.[illegible]	.[illegible]
41	.[illegible]	.[illegible]	.[illegible]	.[illegible]	.[illegible]	.[illegible]	.[illegible]	.[illegible]	.[illegible]	.[illegible]
42	.[illegible]	.[illegible]	.[illegible]	.[illegible]	.[illegible]	.[illegible]	.[illegible]	.[illegible]	.[illegible]	.[illegible]
43	.[illegible]	.[illegible]	.[illegible]	.[illegible]	.[illegible]	.[illegible]	.[illegible]	.[illegible]	.[illegible]	.[illegible]
44	.[illegible]	.[illegible]	.[illegible]	.[illegible]	.[illegible]	.[illegible]	.[illegible]	.[illegible]	.[illegible]	.[illegible]
45	.[illegible]	.[illegible]	.[illegible]	.[illegible]	.[illegible]	.[illegible]	.[illegible]	.[illegible]	.[illegible]	.[illegible]
46	.[illegible]	.[illegible]	.[illegible]	.[illegible]	.[illegible]	.[illegible]	.[illegible]	.[illegible]	.[illegible]	.[illegible]
47	.[illegible]	.[illegible]	.[illegible]	.[illegible]	.[illegible]	.[illegible]	.[illegible]	.[illegible]	.[illegible]	.[illegible]
48	.[illegible]	.[illegible]	.[illegible]	.[illegible]	.[illegible]	.[illegible]	.[illegible]	.[illegible]	.[illegible]	.[illegible]
49	.[illegible]	.[illegible]	.[illegible]	.[illegible]	.[illegible]	.[illegible]	.[illegible]	.[illegible]	.[illegible]	.[illegible]
50	.[illegible]	.[illegible]	.[illegible]	.[illegible]	.[illegible]	.[illegible]	.[illegible]	.[illegible]	.[illegible]	.[illegible]
51	.[illegible]	.[illegible]	.[illegible]	.[illegible]	.[illegible]	.[illegible]	.[illegible]	.[illegible]	.[illegible]	.[illegible]
52	.[illegible]	.[illegible]	.[illegible]	.[illegible]	.[illegible]	.[illegible]	.[illegible]	.[illegible]	.[illegible]	.[illegible]
53	.[illegible]	.[illegible]	.[illegible]	.[illegible]	.[illegible]	.[illegible]	.[illegible]	.[illegible]	.[illegible]	.[illegible]
54	.[illegible]	.[illegible]	.[illegible]	.[illegible]	.[illegible]	.[illegible]	.[illegible]	.[illegible]	.[illegible]	.[illegible]
55	.[illegible]	.[illegible]	.[illegible]	.[illegible]	.[illegible]	.[illegible]	.[illegible]	.[illegible]	.[illegible]	.[illegible]
56	.[illegible]	.[illegible]	.[illegible]	.[illegible]	.[illegible]	.[illegible]	.[illegible]	.[illegible]	.[illegible]	.[illegible]
57	.[illegible]	.[illegible]	.[illegible]	.[illegible]	.[illegible]	.[illegible]	.[illegible]	.[illegible]	.[illegible]	.[illegible]
58	.[illegible]	.[illegible]	.[illegible]	.[illegible]	.[illegible]	.[illegible]	.[illegible]	.[illegible]	.[illegible]	.[illegible]
59	.[illegible]	.[illegible]	.[illegible]	.[illegible]	.[illegible]	.[illegible]	.[illegible]	.[illegible]	.[illegible]	.[illegible]
60	.348	.388	.561	.397	.458	.404	.425	.399	.458	.408

Run No. 17 ; u component

Separation Distance (m.)

K	6	12	18	24	36	48	60	72	84	90
00	.557	.413	.287	.268	.172	.110	.144	.683,-1	.472,-1	.567,-1
01	.687	.471	.327	.265	.200	.115	.147	.822,-1	.256,-1	.146,-1
02	.765	.570	.380	.281	.196	.134	.176	.108	.252,-1	.041,-2
03	.680	.670	.430	.308	.198	.175	.175	.361,-1	.576,-1	-.106,-1
04	.559	.655	.508	.350	.248	.184	.161	.905,-1	.195,-1	-.129,-2
05	.451	.542	.541	.361	.206	.173	.157	.818,-1	.817,-1	.124,-1
06	.378	.477	.524	.378	.216	.160	.178	.877,-1	.500,-1	.273,-1
07	.321	.389	.479	.379	.255	.195	.184	.115	.270,-1	.388,-1
08	.284	.318	.418	.379	.256	.196	.195	.155	.155,-1	.393,-1
09	.255	.261	.351	.370	.278	.212	.209	.151	.196,-1	.253,-1
10	.228	.214	.278	.341	.279	.215	.206	.175	.695,-1	.244,-1
11	.211	.198	.226	.295	.279	.240	.217	.148	.996,-1	.335,-1
12	.191	.171	.208	.275	.258	.238	.208	.205	.114	.240,-1
13	.159	.145	.196	.252	.246	.245	.197	.216	.127	.283,-1
14	.115	.133	.196	.245	.227	.230	.208	.216	.141	.108
15	.057,-1	.101	.160	.242	.208	.208	.206	.205	.152	.160
16	.714,-1	.666,-1	.121	.224	.208	.177	.204	.219	.179	.155
17	.214,-1	.735,-1	.854,-1	.196	.209	.162	.196	.215	.166	.161
18	.145,-1	.960,-1	.628,-1	.176	.212	.161	.167	.201	.155	.177
19	.107,-1	.757,-1	.575,-1	.168	.209	.155	.160	.201	.150	.166
20	.994,-1	.108	.407,-1	.117	.169	.151	.164	.186	.172	.159
21	.811,-1	.107	.294,-1	.122	.158	.150	.146	.166	.167	.155
22	.761,-1	.102	.870,-1	.155	.147	.161	.115	.144	.157	.174
23	.646,-1	.915,-1	.100	.150	.138	.141	.151	.140	.157	.167
24	.640,-1	.727,-1	.111	.124	.150	.148	.148	.145	.151	.192
25	.469,-1	.756,-1	.908,-1	.120	.127	.141	.161	.175	.167	.149
26	.415,-1	.728,-1	.860,-1	.114	.131	.139	.156	.161	.119	.187
27	.291,-1	.555,-1	.847,-1	.847,-1	.147	.138	.161	.104	.856,-1	.138
28	.857,-2	.555,-1	.778,-1	.520,-1	.150	.139	.177	.879,-1	.841,-1	.105
29	-.154,-2	.497,-1	.739,-1	.506,-1	.174	.150	.178	.948,-1	.915,-1	.11
30	-.326,-2	.434,-1	.744,-1	.1011,-1	.1[illegible],-1	.144	.168	.108	.107	.105
31	.818,-1	.4[illegible],-1	.7[illegible],-1	.[illegible],-2	.[illegible],-1	.116	.134	.119	.[illegible],-1	.[illegible],-1
32	.[illegible],-1	.[illegible],-1	.[illegible],-1	.[illegible],-1	.[illegible],-1	.[illegible],-1	.[illegible],-1	.[illegible],-1	.[illegible],-1	.[illegible],-1
33	.[illegible],-1	.[illegible],-1	.[illegible],-1	.[illegible],-1	.[illegible],-1	.[illegible],-1	.[illegible],-1	.[illegible],-1	.[illegible],-1	.[illegible],-1
34	.[illegible],-1	.[illegible],-1	.[illegible],-1	.[illegible],-1	.[illegible],-1	.[illegible],-1	.[illegible],-1	.[illegible],-1	.[illegible],-1	.[illegible],-1
35	.[illegible],-1	.[illegible],-1	.[illegible],-1	.[illegible],-1	.[illegible],-1	.[illegible],-1	.[illegible],-1	.[illegible],-1	.[illegible],-1	.[illegible],-1
36	-.[illegible],-1	.[illegible],-1	.[illegible],-1	.[illegible],-1	.[illegible],-1	.[illegible],-1	.[illegible],-1	.[illegible],-1	.[illegible],-1	.[illegible],-1
37	-.[illegible],-2	.[illegible],-1	.[illegible],-1	.[illegible],-1	.[illegible],-1	.[illegible],-1	.[illegible],-1	.[illegible],-1	.[illegible],-1	.[illegible],-1
38	-.[illegible],-2	.[illegible],-1	.[illegible],-1	.[illegible],-1	.[illegible],-1	.[illegible],-1	.[illegible],-1	.[illegible],-1	.[illegible],-1	.[illegible],-1
39	-.[illegible],-1	.[illegible],-1	.[illegible],-1	.[illegible],-1	.[illegible],-1	.[illegible],-1	.[illegible],-1	.[illegible],-1	.[illegible],-1	.[illegible],-1
40	-.[illegible],-1	.[illegible],-1	.[illegible],-1	.[illegible],-1	.[illegible],-1	.[illegible],-1	.[illegible],-1	.[illegible],-1	.[illegible],-1	.[illegible],-1
41	-.[illegible],-1	.[illegible],-1	.[illegible],-1	.[illegible],-1	.[illegible],-1	.[illegible],-1	.[illegible],-1	.[illegible],-1	.[illegible],-1	.[illegible],-1
42	.[illegible],-2	.[illegible],-1	.[illegible],-2	.[illegible],-1	.[illegible],-1	.[illegible],-1	.[illegible],-1	.[illegible],-1	.[illegible],-1	.[illegible],-1
43	.[illegible],-1	.[illegible],-1	-.[illegible],-2	.[illegible],-2	.[illegible],-1	.[illegible],-1	.[illegible],-1	.[illegible],-1	.[illegible],-1	.[illegible],-1
44	.[illegible],-1	.[illegible],-1	-.[illegible],-2	.[illegible],-2	.[illegible],-1	.[illegible],-1	.[illegible],-1	.[illegible],-1	.[illegible],-1	.[illegible],-1
45	.[illegible],-1	.[illegible],-1	.[illegible],-1	.[illegible],-1	.[illegible],-1	.[illegible],-1	.[illegible],-1	.[illegible],-1	.[illegible],-1	.[illegible],-1
46	-.[illegible],-2	.[illegible],-1	.[illegible],-1	.[illegible],-1	.[illegible],-1	.[illegible],-1	.[illegible],-1	.[illegible],-1	.[illegible],-1	.[illegible],-1
47	-.[illegible],-1	.[illegible],-1	.[illegible],-1	.[illegible],-1	.[illegible],-1	.[illegible],-1	.[illegible],-1	.[illegible],-1	.[illegible],-1	.[illegible],-1
48	-.[illegible],-1	.[illegible],-2	.[illegible],-1	.[illegible],-1	.[illegible],-1	.[illegible],-1	.[illegible],-1	.[illegible],-1	.[illegible],-1	.[illegible],-1
49	-.[illegible],-1	-.[illegible],-2	-.[illegible],-1	.[illegible],-1	.[illegible],-1	.[illegible],-1	.[illegible],-1	.[illegible],-1	.[illegible],-1	.[illegible],-1
50	-.[illegible],-1	-.[illegible],-2	.[illegible],-1	.[illegible],-1	.[illegible],-1	.[illegible],-1	-.[illegible],-1	.[illegible],-1	.[illegible],-1	.[illegible],-1
51	-.[illegible],-1	.[illegible],-1	.[illegible],-1	.[illegible]	.[illegible],-1	.[illegible],-1	-.[illegible],-1	.[illegible],-1	.[illegible],-1	.[illegible],-1
52	-.[illegible],-1	-.[illegible],-1	-.[illegible],-2	.[illegible]	.[illegible],-1	.[illegible],-1	-.[illegible],-1	.[illegible],-1	.[illegible]	.[illegible],-1
53	-.[illegible],-1	-.[illegible],-1	-.[illegible],-2	.[illegible]	.[illegible],-1	.[illegible],-1	-.[illegible],-1	.[illegible],-1	.[illegible],-1	.[illegible],-1
54	-.[illegible],-1	-.[illegible],-1	-.[illegible],-1	.[illegible]	.[illegible]	.[illegible],-1	.[illegible],-1	.[illegible],-1	.[illegible],-1	.[illegible],-1
55	-.751,-1	-.190,-1	-.355,-1	.145	.136	.118	.[illegible],-1	.550,-1	.807,-1	.171
56	-.723,-1	-.877,-1	-.546,-1	.145	.142	.117	-.711,-4	.401,-1	.852,-1	.91[illegible],-1
57	-.511,-1	-.444,-1	-.[illegible],-1	.120	.147	.114	-.351,-1	.895,-2	.720,-1	.776,-1
58	-.218,-2	-.661,-1	-.[illegible],-1	.854,-1	.150	.118	-.463,-1	-.216,-1	.480,-1	.844,-1
59	.853,-1	-.555,-1	-.696,-1	.666,-1	.116	.129	-.540,-1	-.465,-1	.947,-1	.910,-1
60	.349,-1	-.405,-1	-.658,-1	.503,-1	.807,-1	.158	-.617,-1	-.375,-1	-.517,-2	.714,-1

Run no. 17 ; v component

Separation Distance (m.)

K	6	12	18	24	30	42	60	72	84	90
00	.155	.471,-1	.144	.895,-1	.627,-1	.759,-1	.105	.101	.102	.241
01	.194	.990,-1	.157	.724,-1	.976,-1	.105	.104	.967,-1	.145	.227
02	.193	.742,-1	.125	.840,-1	.115	.982,-1	.607,-1	.668,-1	.139	.104
03	.165	.120	.116	.845,-1	.853,-1	.845,-1	.809,-1	.741,-1	.118	.112
04	.156	.180	.157	.967,-1	.980,-1	.771,-1	.519,-1	.960,-1	.963,-1	.158
05	.411	.269	.126	.725,-1	.645,-1	.[illegible]	.568,-1	638,-1	.987,-1	.170
06	.319	.555	.[illegible],-1	.196	.957,-1	.101	.515,-1	.196	.[illegible],-1	.161
07	.100	.355	.140	.104	.102	.156	.521,-1	.643,-1	.680,-1	.122
08	.116	.270	.155	.950,-1	.[illegible],-1	.118	.121,-1	.[illegible],-1	.804,-1	.151
09	.180	.177	.[illegible]	.[illegible],-1	.129	.116	.[illegible],-1	.[illegible],-1	.940,-1	.118
10	.109	.[illegible],-1	.238	.156	.109	.115	.[illegible],-1	.418,-1	.981,-2	.518,-1
11	.104	.857,-1	.251	.209	.166	.141	.[illegible],-2	.[illegible],-1	.757,-1	.715,-1
12	.[illegible],-1	.817,-1	.255	.177	.975,-1	.164	.579,-1	.850,-1	.818,-1	.[illegible],-1
13	.[illegible],-1	.124	.136	.186	.[illegible],-1	.119	.[illegible],-1	.[illegible],-1	.559,-1	.[illegible],-1
14	.104	.[illegible],-1	.150	.151	.[illegible],-1	.156	.[illegible],-1	.[illegible],-1	.[illegible],-2	.[illegible],-1
15	.[illegible],-1	.[illegible],-1	.119	.160	.127,-1	.125	.[illegible],-1	.[illegible],-1	.[illegible],-1	.[illegible],-1
16	.[illegible],-1	.[illegible],-1	.101	.179	.[illegible],-1	.110	.[illegible],-1	.[illegible],-1	.[illegible],-1	.[illegible],-1
17	.[illegible],-1	.[illegible],-1	.[illegible],-1	.151	.[illegible],-1	.[illegible],-1	.[illegible],-1	.[illegible],-1	.[illegible],-1	.[illegible],-1
18	.[illegible],-1	.[illegible],-1	.[illegible],-1	.127	.[illegible],-1	.[illegible],-1	.[illegible],-1	.[illegible],-1	.[illegible],-1	.[illegible],-1
19	.[illegible],-1	.[illegible],-1	.101	.101	.104	.[illegible],-1	.[illegible],-1	.[illegible],-1	.[illegible],-1	.[illegible],-1
20	.[illegible],-1	.[illegible],-1	.[illegible]	.110	.[illegible],-1	.[illegible],-1	.[illegible],-1	.[illegible],-1	.[illegible],-1	.[illegible],-1
21	.111	.[illegible],-1	.104	.[illegible],-1	.[illegible],-1	.[illegible],-1	.[illegible],-1	.[illegible],-1	.[illegible],-1	.[illegible],-1
22	.110	.157	.[illegible],-1	.[illegible],-1	.109	.[illegible],-1	.[illegible],-1	.[illegible],-1	.[illegible],-1	.[illegible],-1
23	.108	.105	.[illegible],-1	.[illegible],-1	.[illegible],-1	.[illegible],-1	.[illegible],-1	.[illegible],-1	.[illegible],-1	.[illegible],-1
24	.109	.[illegible],-1	.[illegible],-1	.[illegible],-1	.[illegible],-1	.[illegible],-1	.[illegible],-1	.[illegible],-1	.[illegible],-1	.[illegible],-1
25	.[illegible],-1	.107	.[illegible],-1	.[illegible],-1	.[illegible],-1	.[illegible],-1	.[illegible],-1	.[illegible],-1	.[illegible],-1	.[illegible],-1
26	.[illegible],-1	.[illegible],-1	.[illegible],-1	.150	.[illegible],-1	.[illegible],-1	.[illegible],-1	.[illegible],-1	.[illegible],-1	.[illegible],-1
27	.[illegible],-1	.[illegible],-1	.121	.158	.[illegible],-1	.[illegible],-1	.[illegible],-1	.[illegible],-1	.[illegible],-1	.[illegible],-1
28	.[illegible],-1	.116	.104	.109	.[illegible],-1	.[illegible],-1	.[illegible],-1	.[illegible],-1	.[illegible],-1	.[illegible],-1
29	.[illegible],-1	.[illegible],-1	.150	.[illegible],-1	.103	.[illegible],-1	.[illegible],-1	.[illegible],-1	.[illegible],-1	.[illegible],-1
30	.[illegible],-1	.[illegible],-1	.156	.[illegible],-1	.[illegible],-1	.[illegible],-1	.[illegible],-2	.[illegible],-1	.[illegible],-1	.[illegible],-1
31	.[illegible],-1	.[illegible],-1	.118	.[illegible],-1	.[illegible],-1	.[illegible],-1	.[illegible],-1	.[illegible],-1	.[illegible],-1	.[illegible],-1
32	.[illegible],-1	.[illegible],-1	.[illegible],-1	.[illegible],-1	.[illegible],-1	.[illegible],-1	.[illegible],-2	.[illegible],-1	.[illegible],-1	.[illegible],-1
33	.[illegible],-1	.[illegible],-1	.[illegible],-1	.[illegible],-1	.104	.[illegible],-1	.[illegible],-1	.[illegible],-1	.[illegible],-1	.[illegible],-1
34	.[illegible],-1	.966,-1	.[illegible],-1	.[illegible],-1	.[illegible],-1	.[illegible],-1	.[illegible],-1	.[illegible],-1	.[illegible],-1	.[illegible]
35	.[illegible],-1	.[illegible],-1	.[illegible],-1	.[illegible],-1	.[illegible],-1	.[illegible],-1	.[illegible],-1	.[illegible],-1	.[illegible],-1	.[illegible],-1
36	.[illegible],-1	.[illegible],-1	.[illegible],-1	.[illegible],-1	.[illegible],-1	.[illegible],-1	.[illegible],-1	.[illegible],-1	.[illegible],-1	.[illegible],-1
37	.[illegible],-1	.[illegible],-1	.[illegible],-1	.[illegible],-1	.[illegible],-1	.[illegible],-1	.[illegible],-1	.[illegible],-1	.[illegible],-1	.[illegible],-1
38	.[illegible],-1	.[illegible],-1	.[illegible],-1	.[illegible],-1	.[illegible],-1	.[illegible],-1	.[illegible],-1	.[illegible],-1	.[illegible],-1	.[illegible],-1
39	.[illegible],-1	.[illegible],-1	.[illegible],-1	.[illegible],-1	.[illegible],-1	.[illegible],-1	.[illegible],-1	.[illegible],-1	.[illegible],-1	.[illegible],-1
40	.[illegible],-1	.[illegible],-1	.[illegible],-1	.[illegible],-1	.[illegible],-1	.[illegible],-1	.[illegible],-1	.[illegible],-1	.[illegible],-1	.[illegible],-1
41	.[illegible],-1	.[illegible],-1	.[illegible],-1	.[illegible],-1	.[illegible],-1	.[illegible],-1	.[illegible],-1	.[illegible],-1	.[illegible],-1	.[illegible],-1
42	.[illegible],-1	.[illegible],-1	.[illegible],-1	.[illegible],-1	.[illegible],-1	.[illegible],-1	.[illegible],-1	.[illegible],-1	.[illegible],-1	.[illegible],-1
43	.[illegible],-1	.[illegible],-1	.[illegible],-1	.[illegible],-1	.[illegible],-1	.[illegible],-1	.[illegible],-1	.[illegible],-1	.[illegible],-1	.[illegible],-1
44	.[illegible],-1	.[illegible],-1	.[illegible],-1	.[illegible],-1	.[illegible],-1	.[illegible],-1	.[illegible],-1	.[illegible],-1	.[illegible],-1	.[illegible],-1
45	.[illegible],-1	.[illegible],-1	.[illegible],-1	.[illegible],-1	.[illegible],-1	.[illegible],-1	.[illegible],-1	.[illegible],-1	.[illegible],-1	.[illegible],-1
46	.[illegible],-1	.[illegible],-1	.[illegible],-1	.[illegible],-1	.[illegible],-1	.[illegible],-1	.[illegible],-1	.[illegible],-1	.[illegible],-1	.[illegible],-1
47	.[illegible],-1	.[illegible],-1	.[illegible],-1	.[illegible],-1	.[illegible],-1	.[illegible],-1	.[illegible],-1	.[illegible],-1	.[illegible],-1	.[illegible],-1
48	.[illegible],-1	.[illegible],-1	.[illegible],-1	.[illegible],-1	.[illegible],-1	.[illegible],-1	.[illegible],-1	.[illegible],-1	.[illegible],-1	.[illegible],-1
49	.[illegible],-1	.[illegible],-1	.[illegible],-1	.[illegible],-1	.[illegible],-1	.[illegible],-1	.[illegible],-1	.[illegible],-1	.[illegible],-1	.[illegible],-1
50	.[illegible],-1	.[illegible],-1	.[illegible],-1	.[illegible],-1	.[illegible],-1	.[illegible],-1	.[illegible],-1	.[illegible],-1	.[illegible],-1	.[illegible],-1
51	.[illegible],-1	.[illegible],-1	.[illegible],-1	.[illegible],-1	.[illegible],-1	.[illegible],-1	.[illegible],-1	.[illegible],-1	.[illegible],-1	.[illegible],-1
52	.[illegible],-1	.[illegible],-1	.[illegible],-1	.[illegible],-1	.[illegible],-1	.[illegible],-1	.[illegible],-1	.[illegible],-1	.[illegible],-1	.[illegible],-1
53	.[illegible],-1	.[illegible],-1	.[illegible],-1	.[illegible],-1	.[illegible],-1	.[illegible],-1	.[illegible],-1	.[illegible],-1	.[illegible],-1	.[illegible],-1
54	.[illegible],-1	.[illegible],-1	.[illegible],-1	.[illegible],-1	.[illegible],-1	.[illegible],-1	.[illegible],-1	.[illegible],-1	.[illegible],-1	.[illegible],-1
55	.[illegible],-1	.[illegible],-1	.[illegible],-1	.[illegible],-1	.[illegible],-1	.[illegible],-1	.[illegible],-1	.[illegible],-1	.[illegible],-1	.[illegible],-1
56	.[illegible],-1	.[illegible],-1	.[illegible],-1	.[illegible],-1	.[illegible],-1	.[illegible],-1	.[illegible],-1	.[illegible],-1	.[illegible],-1	.[illegible],-1
57	.[illegible],-1	.[illegible],-1	.[illegible],-1	.[illegible],-1	.[illegible],-1	.[illegible],-1	.[illegible],-1	.[illegible],-1	.[illegible],-1	.[illegible],-1
58	.[illegible],-1	.[illegible],-1	.[illegible],-1	.[illegible],-1	.[illegible],-1	.[illegible],-1	.[illegible],-1	.[illegible],-1	.[illegible],-1	.[illegible],-1
59	.[illegible],-1	.[illegible],-1	.[illegible],-1	.[illegible],-1	.[illegible],-1	.[illegible],-1	.[illegible],-1	.[illegible],-1	.[illegible],-1	.[illegible],-1
60	.[illegible],-1	.[illegible],-1	.[illegible],-1	.[illegible],-1	.[illegible],-1	.[illegible],-1	.[illegible],-1	.[illegible],-1	.[illegible],-1	.[illegible],-1

Run No. 17 ; w component

(separation distance (m.)

K	6	12	18	24	30	42	48	72	84	90
00	.958,-1	-.200,-2	.20 ,-1	-.446,-1	-.507,-1	-.470,-1	.191,-1	-.309,-1	.722,-2	.367,-2
01	.595	-.975,-2	.194,-1	-.450,-2	-.955,-1	-.241,-1	-.119,-1	-.745,-1	.115,-2	.190,-1
02	.1063,-1	.2?6,-1	.140,-1	-.170,-1	.246,-1	-.196,-1	-.598,-1	-.134,-1	-.210,-1	.140,-1
03	.1?4,-1	.108	.209,-1	.714,-2	.168,-1	.752,-1	.207,-1	.216,-1	-.189 ,-1	.252,-1
04	.577,-1	.165	.201,-1	-.740,-2	-.?98,-1	.468,-1	-.117,-1	.?45,-1	-.?73,-1	-.117,-1
05	.125,-1	.?95,-1	.199	-.?82,-1	.?92,-2	-.108,-2	.?72,-1	-.?55,-1	.?09 -1	-.?56,-1
06	.125,-1	-.?40,-?	-.?95,-1	.107,-?	.178,-2	.225,-1	-.166,-1	-.?72,-1	-.?09,-1	-.?13,-1
07	.126,-1	.?47,-1	.?25,-1	-.?95,-1	.117,-1	-.?75,-2	-.?07,-2	-.?07,-1	.?15,-1	-.?53,-1
08	-.125,-1	.?40,-1	.?25,-1	.?45,-1	.?56,-1	-.151,-1	.?4?,-1	-.?18,-1	.?99,-1	-.?89,-1
09	-.127,-1	.?05,-1	.?54,-?	-.?0?,-1	-.?41,-1	-.?77,-?	.?08,-2	-.?44,-2	-.?75,-1	-.?06,-1
10	-.?75,-2	-.?05,-2	.?01,-1	-.?17,-?	-.?15,-1	-.?55,-1	-.?46,-1	.?4?,-?	-.?1?,-1	-.?39,-1
11	.?01,-1	-.??0,-1	.?14,-1	-.?57,-1	-.?17,-?	-.?21,-1	-.?14,-1	.?55,-1	.?62,-1	-.?48,-1
12	-.?1?,-1	.?17,-1	-.?1?,-1	-.?4?,-1	.?57,-1	.?2?,-?	-.?4?,-1	-.?1?,-1	.?5?,-1	-.?46,-?
13	-.?1?,-1	.?41,-?	.?25,-?	.?11,-1	-.?77,-1	.?44,-1	-.?75,-?	.?15,-?	-.?5?,-?	-.?11,-1
14	.?21,-?	.?1?,-1	.?75,-1	-.?21,-?	-.?5?,-1	-.?75,-1	.?4?,-1	.?45,-?	.?75,-?	.?12,-?
15	-.?5?,-1	.?71,-?	-.?11,-1	-.?17,-1	-.?47,-1	-.?5?,-1	-.?21,-?	.?2?,-1	.?41,-?	-.?12,-?
16	.?15,-?	.?12, ?	.?14,-1	-.?12,-1	.?14?,-1	-.?17,-1	-.?2?,-1	-.?4?,-1	.?42,-1	-.?69,-?
17	-.?2?,-1	-.?47,-1	.?07,-1	-.?47,-1	.?52,-?	.?2?, 1	.?71,-?	.?75,-1	-.?41,-?	.?71,-1
18	-.?12, 1	-.?47, 1	-.?0?, 1	.?4?,-1	.?5?,-1	-.?1?,-1	.?4?,-1	.?47,-?	.?2?,-1	.?41,-1
19	.?5?,-?	-.?45, 1	-.?1?,-1	-.?7?,-?	-.?2?,-?	.?15,-1	.?45,-1	-.?4?,-1	-.?11,-1	-.?2?,-1
20	-.?7?,-1	.?5?,-1	-.?55,-1	-.?5?,-1	-.?5?,-1	.?5?,-?	-.?5?,-?	.?2?,-?	.?75,-?	-.?72,-1
21	-.?1?,-1	.?45,-1	.?1?, 1	.?5?,-1	-.?45,-1	.?4?,-?	.?01,-1	-.?47,-1	-.?15,-1	-.?4?,-1
22	-.?41,-1	-.?7?, 1	-.?2?,-1	.?2?,-1	.?2?,-1	-.?1?,-?	.?81,-1	.?47,-1	-.?4?,-1	-.?5?,-1
23	-.?4?,-1	.?07, 1	-.?4?,-?	-.?4?,-1	-.?4?,-1	-.?75,-1	.?4?,-1	.?5?,-1	-.?51,-1	-.?4?,-?
24	-.?45,-1	.?2?,-1	-.?4?,-1	.?2?,-1	-.?4?,-1	.?2?, 1	-.?2?,-1	.?45?,-1	-.?1?,-1	-.?4?,-1
25	-.?7?,-1	-.?5?, 1	-.?15,-1	-.?4?,-1	-.?4?,-1	.?5?,-?	-.?5?,-?	.?1?,-?	.?75,-5	-.?72,-1
26	-.?1?,-1	.?45,-1	.?4?, 1	.?5?,-1	-.?45,-1	.?4?,-?	.?01,-1	-.?47,-1	-.?15,-1	-.?4?,-1
27	-.?41,-1	-.?7?, 1	-.?2?,-1	.?2?,-1	.?2?,-1	-.?1?,-?	.?81,-1	.?47,-1	-.?4?,-1	-.?5?,-1
28	.?71,-1	.?7?,-1	.?47,-1	-.?2?,-?	-.?4?,-1	.?4?,-1	-.?11,-1	.?47,-1	.?77,-1	.?41,-1
29	.?11,-1	-.?10,-1	.?41,-1	.?47,-1	-.?51,-1	.?41?,-?	-.?55,-?	-.?4?,-1	.?1?,-1	-.?45,-?
30	-.?5?, 1	.?4?,-?	-.?1?, 1	-.?5?,-1	.?17,-1	-.?17,-1	.?4?,-1	-.?4?,-1	-.?5?,-1	.?66,-1
31	-.?1?,-1	.?14,-1	.?5?,-?	-.?4?,-1	-.?4?,-1	.?5?,-1	-.?4?,-?	-.?2?,-?	.?4?,-1	-.?47,-?
32	-.?15, 1	-.?77,-1	.?7?,-1	-.?6?,-1	-.?5?,-?	.?1?,-1	.?5?,-?	.?2?, 1	-.?4?,-1	.?4?,-1
33	.?5?, 1	-.?1?,-?	-.?4?,-1	.?1?,-1	.?5?,-1	.?4?,-1	-.?2?,-?	.?2?,-1	.?1?,-1	-.?2?,-1
34	-.?1?, 1	.?0?,-1	-.?4?,-1	.?7?,-1	-.?4?,-1	.?2?,-1	.?0?,-?	.?4?,-1	.?5?,-1	.?21,-1
35	.?5?,-?	.?5?,-?	.?5?,-1	.?2?,-?	.?4?,-1	.?4?,-1	.?1?,-1	-.?1?,-1	.?4?,-1	-.?5?,-1
36	.?1?,-?	.?4?,-1	.?1?,-1	-.?5?,-1	.?5?,-1	-.?5?,-1	.?4?,-1	.?1?,-1	.?1?,-1	-.?1?,-1
37	.?1?,-1	.?1?,-1	.?1?,-1	.?1?,-1	.?1?,-1	.?1?,-1	.?1?,-1	.?1?,-1	.?1?,-1	.?1?,-1
38	.?1?,-1	.?1?,-1	.?1?,-1	.?1?,-1	.?1?,-1	.?1?,-1	.?1?,-1	.?1?,-1	.?1?,-1	.?1?,-1
39	.?1?,-1	.?1?,-1	.?1?,-1	.?1?,-1	.?1?,-1	.?1?,-1	.?1?,-1	.?1?,-1	.?1?,-1	.?1?,-1
40	.?1?,-1	.?1?,-1	.?1?,-1	.?1?,-1	.?1?,-1	.?1?,-1	.?1?,-1	.?1?,-1	.?1?,-1	.?1?,-1
41	.?1?,-1	.?1?,-1	.?1?,-1	.?1?,-1	.?1?,-1	.?1?,-1	.?1?,-1	.?1?,-1	.?1?,-1	.?1?,-1
42	.?1?,-1	.?1?,-1	.?1?,-1	.?1?,-1	.?1?,-1	.?1?,-1	.?1?,-1	.?1?,-1	.?1?,-1	.?1?,-1
43	.?1?,-1	.?1?,-1	.?1?,-1	.?1?,-1	.?1?,-1	.?1?,-1	.?1?,-1	.?1?,-1	.?1?,-1	.?1?,-1
44	.?1?,-1	.?1?,-1	.?1?,-1	.?1?,-1	.?1?,-1	.?1?,-1	.?1?,-1	.?1?,-1	.?1?,-1	.?1?,-1
45	.?1?,-1	.?1?,-1	.?1?,-1	.?1?,-1	.?1?,-1	.?1?,-1	.?1?,-1	.?1?,-1	.?1?,-1	.?1?,-1
46	.?1?,-1	.?1?,-1	.?1?,-1	.?1?,-1	.?1?,-1	.?1?,-1	.?1?,-1	.?1?,-1	.?1?,-1	.?1?,-1
47	.?1?,-1	.?1?,-1	.?1?,-1	.?1?,-1	.?1?,-1	.?1?,-1	.?1?,-1	.?1?,-1	.?1?,-1	.?1?,-1
48	.?1?,-1	.?1?,-1	.?1?,-1	.?1?,-1	.?1?,-1	.?1?,-1	.?1?,-1	.?1?,-1	.?1?,-1	.?1?,-1
49	.?1?,-1	.?1?,-1	.?1?,-1	.?1?,-1	.?1?,-1	.?1?,-1	.?1?,-1	.?1?,-1	.?1?,-1	.?1?,-1
50	.?1?,-1	.?1?,-1	.?1?,-1	.?1?,-1	.?1?,-1	.?1?,-1	.?1?,-1	.?1?,-1	.?1?,-1	.?1?,-1
51	.?1?,-1	.?1?,-1	.?1?,-1	.?1?,-1	.?1?,-1	.?1?,-1	.?1?,-1	.?1?,-1	.?1?,-1	.?1?,-1
52	.?1?,-1	.?1?,-1	.?1?,-1	.?1?,-1	.?1?,-1	.?1?,-1	.?1?,-1	.?1?,-1	.?1?,-1	.?1?,-1
53	.?1?,-1	.?1?,-1	.?1?,-1	.?1?,-1	.?1?,-1	.?1?,-1	.?1?,-1	.?1?,-1	.?1?,-1	.?1?,-1
54	.?1?,-1	.?1?,-1	.?1?,-1	.?1?,-1	.?1?,-1	.?1?,-1	.?1?,-1	.?1?,-1	.?1?,-1	.?1?,-1
55	.?1?,-1	.?1?,-1	.?1?,-1	.?1?,-1	.?1?,-1	.?1?,-1	.?1?,-1	.?1?,-1	.?1?,-1	.?1?,-1
56	.?1?,-1	.?1?,-1	.?1?,-1	.?1?,-1	.?1?,-1	.?1?,-1	.?1?,-1	.?1?,-1	.?1?,-1	.?1?,-1
57	.?1?,-1	.?1?,-1	.?1?,-1	.?1?,-1	.?1?,-1	.?1?,-1	.?1?,-1	.?1?,-1	.?1?,-1	.?1?,-1
58	.?1?,-1	.?1?,-1	.?1?,-1	.?1?,-1	.?1?,-1	.?1?,-1	.?1?,-1	.?1?,-1	.?1?,-1	.?1?,-1
59	.?1?,-1	.?1?,-1	.?1?,-1	.?1?,-1	.?1?,-1	.?1?,-1	.?1?,-1	.?1?,-1	.?1?,-1	.?1?,-1
60	.407,-1	-.207,-1	-.?7?,-1	.?52,-1	-.?71,-1	-.?45,-2	.?71,-1	-.?85,-1	.197,-1	.?72,-1

Run No. 21 ; u - component

	Separation Distance (m.)									
K	6	18	18	24	36	42	48	72	84	90
00	.806	.709	.650	.528	.485	.469	.455	.350	.363	.370
01	.841	.800	.766	.545	.531	.493	.457	.352	.376	.382
02	.791	.775	.710	.576	.5.1	.515	.477	.358	.364	.372
03	.678	.67	.651	.635	.557	.517	.501	.360	.361	.365
04	.695	.60	.616	.642	.574	.551	.500	.359	.370	.375
05	.596	.567	.571	.654	.605	.540	.502	.411	.399	.371
06	.551	.550	.550	.645	.609	.559	.510	.446	.405	.379
07	.525	.516	.528	.548	.615	.560	.497	.444	.402	.401
01	.489	.487	.477	.500	.600	.565	.485	.449	.432	.411
02	.444	.476	.455	.527	.565	.550	.455	.455	.409	.414
10	.460	.447	.424	.505	.525	.530	.427	.457	.432	.410
11	.458	.427	.445	.491	.509	.537	.469	.452	.430	.408
12	.455	.415	.432	.503	.504	.501	.439	.459	.427	.404
13	.457	.415	.406	.475	.490	.470	.441	.439	.417	.410
14	.452	.410	.424	.451	.458	.457	.421	.442	.418	.398
15	.461	.396	.419	.425	.451	.459	.415	.401	.407	.382
16	.440	.379	.420	.421	.401	.429	.415	.395	.400	.382
17	.470	.390	.411	.407	.411	.407	.416	.396	.392	.365
18	.452	.362	.397	.399	.397	.401	.395	.380	.380	.358
19	.441	.356	.391	.390	.398	.395	.395	.385	.387	.389
20	.426	.390	.368	.381	.379	.365	.360	.378	.385	.378
21	.387	.351	.366	.351	.345	.386	.350	.365	.365	.361
22	.401	.350	.370	.326	.350	.375	.394	.362	.375	.371
23	.419	.337	.381	.338	.367	.377	.392	.351	.367	.387
24	.376	.316	.375	.326	.361	.391	.391	.394	.395	.374
25	.367	.305	.356	.355	.356	.376	.392	.360	.350	.394
26	.371	.326	.361	.301	.347	.396	.357	.364	.357	.393
27	.371	.290	.327	.348	.370	.345	.396	.356	.347	.393
28	.340	.279	.336	.341	.340	.350	.376	.321	.362	.392
29	.347	.267	.318	.315	.335	.365	.394	.371	.324	.361
30	.365	.276	.310	.340	.325	.347	.395	.377	.360	.390
31	.355	.267	.310	.344	.315	.356	.377	.378	.346	.393
32	.337	.[illegible]	.319	.335	.306	.355	.376	.370	.341	.391
33	.356	.[illegible]	.315	.351	.309	.325	.395	.367	.370	.381
34	.345	.305	.301	.349	.305	.327	.396	.381	.349	.397
35	.364	.357	.378	.365	.345	.357	.392	.365	.387	.396
36	.357	.331	.318	.342	.347	.365	.391	.352	.366	.386
37	.341	.341	.308	.332	.330	.395	.382	.361	.391	.390
38	.361	.335	.340	.362	.377	.395	.359	.350	.377	.389
39	.346	.356	.348	.375	.371	.394	.397	.357	.378	.389
40	.351	.357	.377	.364	.385	.396	.392	.365	.378	.394
41	.361	.350	.341	.346	.371	.396	.391	.377	.380	.391
42	.301	.347	.349	.360	.381	.394	.391	.355	.384	.394
43	.377	.355	.368	.374	.394	.397	.393	.358	.385	.387
44	.376	.365	.381	.397	.367	.398	.396	.391	.396	.394
45	.375	.365	.376	.346	.398	.371	.391	.385	.396	.389
46	.355	.317	.379	.343	.350	.387	.365	.398	.381	.381
47	.340	.306	.350	.359	.398	.396	.389	.386	.398	.370
48	.365	.390	.365	.367	.383	.398	.385	.379	.385	.376
49	.354	.309	.344	.355	.385	.394	.368	.395	.399	.385
50	.341	.355	.342	.339	.389	.390	.388	.396	.379	.385
51	.357	.344	.351	.355	.350	.385	.398	.397	.398	.380
52	.309	.325	.391	.320	.399	.389	.398	.389	.399	.394
53	.348	.306	.340	.327	.353	.385	.398	.384	.389	.397
54	.304	.304	.329	.324	.331	.375	.398	.398	.391	.385
55	.322	.378	.329	.305	.348	.374	.395	.396	.389	.396
56	.319	.306	.320	.309	.342	.371	.396	.389	.395	.393
57	.325	.307	.317	.383	.329	.385	.371	.397	.365	.398
58	.328	.314	.323	.350	.324	.354	.398	.327	.381	.387
59	.329	.307	.330	.384	.316	.349	.370	.344	.396	.304
60	.332	.310	.336	.305	.310	.345	.367	.355	.302	.324

Run No. 81 ; v component

	Separation distance (s.)									
K	6	12	18	24	36	48	48	72	84	90
00	.455	.398	.325	.321	.241	.198	.298	.243	.191	.250
01	.710	.560	.408	.394	.267	.197	.310	.250	.222	.223
02	.488	.556	.510	.447	.325	.269	.352	.270	.250	.227
03	.365	.444	.505	.319	.372	.316	.333	.307	.226	.234
04	.307	.350	.454	.508	.406	.393	.314	.304	.309	.259
05	.270	.264	.371	.372	.441	.407	.354	.305	.272	.279
06	.220	.247	.504	.315	.387	.397	.360	.323	.276	.262
07	.227	.231	.278	.276	.315	.393	.376	.335	.269	.241
08	.195	.218	.251	.[illegible]	.295	.[illegible]25	.408	.333	.283	.257
09	.180	.165	.213	.207	.257	.310	.343	.287	.267	.290
10	.207	.168	.175	.190	.246	.236	.331	.276	.315	.250
11	.175	.210	.[illegible]35	.168	.189	.[illegible]86	.312	.326	.248	.[illegible]82
12	.160	.188	.197	.189	.190	.201	.317	.316	.269	.271
13	.131	.208	.205	.184	.197	.165	.306	.306	.[illegible]82	.254
14	.970,-1	.178	.160	.178	.218	.154	.270	.248	.254	.268
15	.155	.140	.126	.204	.160	.218	.250	.[illegible]24	.300	.267
16	.[illegible]26	.152	.120	.169	.191	.187	.[illegible]55	.248	.275	.258
17	.178	.150	.145	.150	.187	.166	.234	.212	.268	.[illegible]42
18	.149	.155	.164	.141	.175	.140	.240	.209	.235	.241
19	.181	.[illegible]61	.150	.165	.154	.146	.218	.185	.240	.[illegible]44
20	.156	.174	.136	.[illegible]68	.[illegible]39	.[illegible]81	.[illegible]66	.[illegible]40	.[illegible]07	.[illegible]07
21	.140	.169	.145	.165	.161	.187	.219	.[illegible]85	.[illegible]82	.185
22	.135	.147	.154	.140	.166	.160	.238	.171	.203	.199
23	.121	.120	.153	.177	.153	.191	.206	.179	.[illegible]08	.197
24	.158	.141	.123	.175	.161	.144	.211	.209	.178	.168
25	.137	.151	.125	.168	.185	.151	.210	.[illegible]28	.188	.186
26	.168	.125	.137	.[illegible]96	.178	.137	.[illegible]36	.196	.177	.178
27	.144	.156	.120	.156	.137	.155	.150	.176	.196	.[illegible]98
28	.111	.144	.150	.171	.150	.146	.187	.155	.[illegible]01	.165
29	.[illegible]00,-1	.781	.156	.168	.159	.156	.200	.160	.185	.164
30	.106	.158	.156	.161	.137	.118	.[illegible]89	.145	.140	.160
31	.[illegible]61,-1	.146	.111	.[illegible]14	.[illegible]88	.[illegible]15	.176	.150	.147	.150
32	.[illegible]99,-1	.156	.145	.156	.140	.191	.179	.145	.[illegible]08	.159
33	.[illegible]90,-1	.154	.[illegible]89	.125	.154	.157	.189	.150	.917,-1	.110
34	.111	.141	.110	.145	.159	.178	.[illegible]78	.155	.151	.811,-1
35	.101	.110	.[illegible]93,-1	.151	.141	.140	.179	.118	.101	.119
36	.[illegible]68	.[illegible]78	.150	.[illegible]84	.[illegible]86	.[illegible]28	.[illegible]00	.166	.[illegible]68	.[illegible]05,-1
37	.119	.145	.[illegible]74	.[illegible]80	.[illegible]84	.[illegible]19	.[illegible]08	.[illegible]34	.[illegible]66	.[illegible]80
38	.161	.154	.[illegible]18	.[illegible]98,-1	.[illegible]49	.[illegible]19	.[illegible]05	.[illegible]09	.170	.111
39	.[illegible]10	.[illegible]91	.[illegible]85	.111	.[illegible]16	.[illegible]09	.[illegible]08	.160	.[illegible]40	.[illegible]67
40	.[illegible]17,-1	.[illegible]17	.[illegible]05	.[illegible]00,-1	.[illegible]14	.111	.[illegible]14	.[illegible]50	.[illegible]98	.[illegible]59
41	.[illegible]81,-1	.[illegible]50	.[illegible]07	.661,-1	.930,-1	.000,-1	.[illegible]08	.[illegible]89	.[illegible]66	.[illegible]60
42	.[illegible]08	.[illegible]55	.[illegible]04	.[illegible]14	.[illegible]07	.595,-1	.[illegible]99	.[illegible]58	.[illegible]05	.[illegible]58
43	.[illegible]18	.[illegible]55	.[illegible]40	.[illegible]67	.[illegible]06	.061,-1	.[illegible]87	.[illegible]94	.[illegible]01	.[illegible]98
44	.[illegible]49	.[illegible]94	.[illegible]52	.[illegible]85	.[illegible]01	.[illegible]06	.[illegible]04	.[illegible]75	.[illegible]86	.[illegible]98
45	.[illegible]45	.[illegible]78	.[illegible]55	.[illegible]49	.[illegible]48	.[illegible]10	.[illegible]71	.[illegible]79	.[illegible]67	.[illegible]68
46	.[illegible]40	.[illegible]54	.[illegible]74	.[illegible]55	.[illegible]56	.[illegible]35	.[illegible]12	.[illegible]83	.[illegible]58	.[illegible]59
47	.[illegible]52	.[illegible]81	.[illegible]56	.[illegible]03	.[illegible]47	.[illegible]67	.[illegible]75	.[illegible]05	.[illegible]60	.[illegible]61
48	.[illegible]08	.[illegible]70	.[illegible]71	.[illegible]11	.[illegible]96	.[illegible]50	.[illegible]91	.[illegible]95	.[illegible]75	.[illegible]59
49	.[illegible]36	.[illegible]65	.[illegible]45	.[illegible]59	.[illegible]49	.[illegible]68	.[illegible]05	.[illegible]69	.[illegible]85	.[illegible]58
50	.[illegible]85	.[illegible]68	.[illegible]40	.[illegible]54	.[illegible]69	.[illegible]55	.[illegible]20[illegible]	.[illegible]64	.[illegible]54	.[illegible]65
51	.[illegible]86	.[illegible]58	.[illegible]64	.[illegible]55	.[illegible]54	.[illegible]67	.[illegible]76	.[illegible]73	.[illegible]65	.[illegible]65
52	.[illegible]88	.[illegible]55	.[illegible]57	.[illegible]64	.[illegible]88	.[illegible]85	.[illegible]64	.[illegible]63	.[illegible]97	.[illegible]76
53	.[illegible]11	.[illegible]52	.[illegible]56	.[illegible]79	.[illegible]54	.[illegible]50	.[illegible]05	.[illegible]06	.[illegible]06	.[illegible]93
54	.[illegible]48	.[illegible]45	.[illegible]45	.[illegible]93	.[illegible]56	.[illegible]51	.[illegible]84	.[illegible]67	.[illegible]05	.[illegible]96
55	.[illegible]50	.[illegible]08	.[illegible]38	.[illegible]72	.[illegible]55	.[illegible]53	.[illegible]05	.[illegible]60	.[illegible]09	.[illegible]01
56	.[illegible]65	.[illegible]66	.[illegible]65	.[illegible]88	.[illegible]83	.[illegible]55	.[illegible]23	.[illegible]71	.[illegible]60	.[illegible]88
57	.[illegible]75	.[illegible]62	.[illegible]8[illegible]	.[illegible]50	.[illegible]35	.[illegible]75	.[illegible]40	.[illegible]99	.[illegible]44	.[illegible]56
58	.[illegible]55	.[illegible]41	.[illegible]68	.[illegible]55	.[illegible]98	.[illegible]34	.[illegible]19	.[illegible]94	.[illegible]93	.[illegible]45
59	.[illegible]39	.[illegible]90	.[illegible]62	.[illegible]31	.[illegible]71	.[illegible]14	.[illegible]27	.[illegible]00	.[illegible]05	.[illegible]02
60	.[illegible]77	.[illegible]88	.[illegible]69	.[illegible]37	.[illegible]58	.[illegible]65	.[illegible]99	.[illegible]12	.[illegible]05	.[illegible]05

Run No. 21 ; v component

Separation distance (m.)

K	6	12	18	24	36	42	48	72	84	90
00	.490,-1	.655,-5	.507,-1	.415,-1	-.137,-1	.277,-1	-.330,-1	.350,-1	.111,-2	-.360,-1
01	.198	.949,-1	.768,-1	.520,-1	.106,-1	.194,-1	.272,-1	-.338,-1	-.410,-2	-.675,-1
02	.868,-1	.649,-1	.647,-1	-.797,-2	-.357,-1	-.618,-1	.271,-1	-.917,-2	.495,-1	.905,-1
03	.333,-1	.644,-1	.518,-1	.964,-2	-.726,-2	-.944,-2	.281,-2	-.150,-1	.187,-2	-.330,-1
04	-.568,-1	.348,-2	.469,-1	.735,-2	-.141,-1	.241,-1	.109,-1	.118,-1	.596,-1	-.818,-1
05	.848,-1	.186,-1	.842,-1	-.879,-1	-.911,-1	.431,-1	.543,-1	.027,-1	.810,-1	-.208,-1
06	-.479,-1	-.909,-1	-.189,-1	.561,-2	-.235,-1	.254,-1	-.307,-1	.119,-1	.815,-2	-.526,-1
07	-.307,-2	.715,-1	-.189,-1	.415,-1	-.422,-2	-.307,-1	-.662,-1	.505,-1	-.454,-2	.924,-1
08	.185,-1	-.879,-2	-.838,-1	.251,-2	.500,-1	.121,-1	-.477,-1	-.561,-1	.974,-1	.752,-1
09	-.244,-1	.981,-1	-.514,-1	.432,-2	.000,-1	.785,-2	-.345,-1	-.871,-1	.982,-1	.708,-1
10	.179,-1	.695,-1	-.151,-1	.764,-1	.108,-2	.757,-1	-.822,-2	.151,-1	.805,-2	.905,-2
11	.119,-1	-.131,-1	-.155,-1	.195,-2	.597,-1	.659,-1	.741,-2	-.119,-1	-.928,-1	.741,-3
12	-.441,-1	-.401,-1	.109	.514,-1	-.955,-1	.611,-1	-.727,-2	-.857,-2	.452,-3	-.597,-1
13	.140,-2	.481,-1	-.129,-1	.129,-1	-.514,-1	.547,-2	-.819,-1	-.460,-2	-.599,-2	-.648,-1
14	-.350,-2	.379,-1	.857,-1	.[illegible]	-.565,-1	.101,-1	-.908,-2	-.150,-1	-.119,-1	.108,-1
15	.489,-1	.109,-2	-.431,-2	.630,-2	-.955,-1	-.605,-1	.401,-2	-.117,-1	-.955,-1	-.846,-1
16	-.808,-1	.688,-1	-.944,-2	.[illegible]	-.973,-1	-.599,-1	-.154,-1	.556,-1	-.914,-1	.500,-1
17	.766,-2	.118,-1	.611,-1	.545,-1	-.197,-1	-.161,-1	-.189,-1	-.785,-1	-.155,-1	-.144,-1
18	.479,-1	.196,-1	.274,-1	.154,-1	-.[illegible],-1	.518,-3	.651,-1	-.920,-1	-.958,-1	-.168,-1
19	.518,-1	.761,-1	.[illegible]	.[illegible]	.596,-1	.596,-1	-.867,-3	-.575,-1	-.795,-2	-.185,-1
20	.596,-2	-.856,-1	.[illegible]	-.[illegible],-1	-.164,-1	.[illegible]	-.710,-1	-.899,-1	.596,-1	-.[illegible],-1
21	-.878,-1	-.116,-1	.[illegible]	.[illegible]	-.[illegible],-1	-.[illegible],-1	-.[illegible],-1	-.[illegible],-2	-.[illegible],-1	-.170,-2
22	-.864,-1	-.1[illegible],-1	-.[illegible],-1	-.191,-1	.[illegible]	.[illegible],-1	-.[illegible],-2	-.[illegible],-1	.[illegible],-1	-.[illegible],-1
23	.107,-1	.[illegible],-1	.155,-1	-.[illegible],-1	.[illegible],-1	-.[illegible],-1	.[illegible],-1	-.[illegible],-1	-.[illegible],-1	-.[illegible],-2
24	-.[illegible],-2	-.[illegible],-1	.[illegible]	.[illegible]	.[illegible],-1	.[illegible],-1	.[illegible],-2	.[illegible],-1	.[illegible],-1	.[illegible],-1
25	-.[illegible],-1	-.[illegible],-2	.[illegible],-1	.[illegible],-1	-.[illegible],-1	-.[illegible],-2	-.[illegible],-2	.[illegible],-1	.[illegible],-1	.[illegible],-2
26	-.[illegible],-1	-.[illegible],-1	-.[illegible],-2	-.[illegible],-2	.[illegible],-2	.[illegible],-1	-.[illegible],-1	.[illegible],-1	-.[illegible],-1	-.[illegible],-1
27	.[illegible],-1	.[illegible],-1	-.[illegible],-1	.[illegible],-1	-.[illegible],-1	.[illegible],-2	.[illegible],-2	.[illegible],-1	-.[illegible],-1	.[illegible],-1
28	.[illegible],-2	.[illegible],-1	.[illegible],-2	.[illegible],-2	.[illegible],-2	.[illegible],-1	.[illegible],-1	.[illegible],-1	.[illegible],-1	.[illegible],-1
29	-.[illegible],-1	-.[illegible],-1	.[illegible],-2	.[illegible],-2	.[illegible],-2	.[illegible],-1	.[illegible],-2	.[illegible],-1	.[illegible],-1	.[illegible],-1
30	-.[illegible],-1	.[illegible],-2	-.[illegible],-1	-.[illegible],-1	.[illegible],-1	-.[illegible],-1	-.[illegible],-1	.[illegible],-1	-.[illegible],-1	.[illegible],-1
31	-.[illegible],-1	.[illegible],-1	-.[illegible],-1	-.[illegible],-1	-.[illegible],-1	-.[illegible],-1	-.[illegible],-1	.[illegible],-1	.[illegible],-1	-.[illegible],-2
32	-.[illegible],-1	-.[illegible],-2	.[illegible],-1	-.[illegible],-1	-.[illegible],-1	-.[illegible],-1	.[illegible],-1	-.[illegible],-1	-.[illegible],-1	-.[illegible],-1
33	.[illegible],-1	-.[illegible],-2	.[illegible],-1	-.[illegible],-2	.[illegible],-2	-.[illegible],-1	.[illegible],-1	-.[illegible],-2	-.[illegible],-2	.[illegible],-2
34	-.[illegible],-1	-.[illegible],-1	-.[illegible],-1	.[illegible],-1	.[illegible],-2	-.[illegible],-1	.[illegible],-1	-.[illegible],-1	.[illegible],-1	-.[illegible],-1
35	-.[illegible],-1	-.[illegible],-2	.[illegible],-2	.[illegible],-1	-.[illegible],-2	-.[illegible],-1	-.[illegible],-1	.[illegible],-1	-.[illegible],-1	-.[illegible],-1
36	-.[illegible],-1	-.[illegible],-1	.[illegible],-1	-.[illegible],-1	-.[illegible],-1	.[illegible],-1	-.[illegible],-1	.[illegible],-1	-.[illegible],-1	-.[illegible],-1
37	.[illegible],-1	.[illegible],-2	.[illegible],-2	.[illegible],-1	.[illegible],-1	.[illegible],-2	.[illegible],-1	-.[illegible],-2	-.[illegible],-1	-.[illegible],-1
38	.[illegible],-1	-.[illegible],-1	.[illegible],-1	.[illegible],-1	-.[illegible],-1	.[illegible],-1	.[illegible],-1	.[illegible],-2	-.[illegible],-2	.[illegible],-2
39	-.[illegible],-1	-.[illegible],-1	.[illegible],-1	.[illegible],-1	-.[illegible],-1	-.[illegible],-1	-.[illegible],-1	-.[illegible],-1	.[illegible],-1	.[illegible],-1
40	.[illegible],-1	-.[illegible],-2	-.[illegible],-2	.[illegible],-1	.[illegible],-2	-.[illegible],-1	.[illegible],-1	-.[illegible],-1	.[illegible],-2	.[illegible],-2
41	.[illegible],-1	.[illegible],-1	.[illegible],-1	.[illegible],-1	-.[illegible],-1	-.[illegible],-1	.[illegible],-1	-.[illegible],-1	-.[illegible],-1	-.[illegible],-1
42	.[illegible],-1	-.[illegible],-1	.[illegible],-1	.[illegible],-2	.[illegible],-1	-.[illegible],-1	.[illegible],-1	.[illegible],-1	-.[illegible],-2	-.[illegible],-2
43	.[illegible],-1	.[illegible],-2	-.[illegible],-2	.[illegible],-1	-.[illegible],-2	-.[illegible],-1	.[illegible],-1	-.[illegible],-1	.[illegible],-1	-.[illegible],-2
44	-.[illegible],-1	-.[illegible],-1	-.[illegible],-1	-.[illegible],-1	-.[illegible],-1	.[illegible],-1	-.[illegible],-1	-.[illegible],-1	-.[illegible],-1	-.[illegible],-1
45	.[illegible],-2	.[illegible],-1	-.[illegible],-1	.[illegible],-1	.[illegible],-1	-.[illegible],-1	.[illegible],-1	-.[illegible],-1	.[illegible],-1	.[illegible],-1
46	.[illegible],-1	.[illegible],-1	-.[illegible],-1	.[illegible],-1	-.[illegible],-1	.[illegible],-1	-.[illegible],-1	.[illegible],-1	-.[illegible],-1	.[illegible],-2
47	.[illegible],-1	.[illegible],-1	-.[illegible],-2	.[illegible],-2	.[illegible],-1	-.[illegible],-1	.[illegible],-1	.[illegible],-2	.[illegible],-1	.[illegible],-1
48	-.[illegible],-2	-.[illegible],-1	.[illegible],-1	.[illegible],-1	.[illegible],-2	.[illegible],-1	-.[illegible],-1	.[illegible],-1	-.[illegible],-1	.[illegible],-1
49	.[illegible],-2	-.[illegible],-1	.[illegible],-1	.[illegible],-1	-.[illegible],-1	-.[illegible],-1	-.[illegible],-1	-.[illegible],-2	.[illegible],-1	.[illegible],-1
50	-.[illegible],-1	.[illegible],-1	-.[illegible],-1	.[illegible],-1	-.[illegible],-2	.[illegible],-2	-.[illegible],-1	-.[illegible],-1	-.[illegible],-1	.[illegible],-2
51	-.[illegible],-1	.[illegible],-1	-.[illegible],-1	.[illegible],-1	-.[illegible],-2	-.[illegible],-1	.[illegible],-2	.[illegible],-1	-.[illegible],-1	.[illegible],-1
52	.[illegible],-1	.[illegible],-1	-.[illegible],-1	-.[illegible],-1	-.[illegible],-1	-.[illegible],-1	-.[illegible],-1	.[illegible],-1	.[illegible],-1	-.[illegible],-2
53	.[illegible],-1	.[illegible],-2	-.[illegible],-1	-.[illegible],-2	-.[illegible],-2	-.[illegible],-2	.[illegible],-2	.[illegible],-2	.[illegible],-1	.[illegible],-1
54	-.[illegible],-1	-.[illegible],-1	.[illegible],-1	.[illegible],-1	.[illegible],-1	-.[illegible],-1	.[illegible],-1	-.[illegible],-1	.[illegible],-1	.[illegible],-1
55	.[illegible],-1	.[illegible],-1	-.[illegible],-1	.[illegible],-1	.[illegible],-2	.[illegible],-1	-.[illegible],-1	.[illegible],-1	.[illegible],-1	.[illegible],-1
56	-.[illegible],-2	-.[illegible],-1	.[illegible],-1	.[illegible],-1	.[illegible],-3	-.[illegible],-1	.[illegible],-1	-.[illegible],-1	.[illegible],-1	.[illegible],-1
57	-.[illegible],-2	-.[illegible],-1	.[illegible],-1	-.[illegible],-1	-.[illegible],-1	.[illegible],-1	.[illegible],-1	.[illegible],-1	.[illegible],-1	.[illegible],-2
58	.[illegible],-2	.[illegible],-1	.[illegible],-3	-.[illegible],-1	-.[illegible],-1	-.[illegible],-1	-.[illegible],-1	-.[illegible],-1	-.[illegible],-2	.[illegible],-2
59	.[illegible],-1	-.[illegible],-1	.[illegible],-1	-.[illegible],-1	.[illegible],-2	-.[illegible],-1	-.[illegible],-2	-.[illegible],-1	-.[illegible],-1	-.[illegible],-1
60	-.[illegible],-1	.[illegible],-1	.[illegible],-1	.[illegible],-2	-.[illegible],-2	.[illegible],-1	.[illegible],-2	-.[illegible],-1	.[illegible],-2	.[illegible],-2

Run No. 83 ; u component

Separation Distance (m.)

k	6	12	18	24	30	42	48	72	84	96
00	.417	.960	.922	.868,-1	.115	.124	.105	-.955,-2	.557,-1	.376,-1
01	.405	.974	.931	.910,-1	.115	.119	.111	.117,-1	.921,-1	.912,-2
02	.381	.969	.919	.804,-1	.941,-1	.114	.102	.876,-2	.507,-1	-.126,-1
03	.379	.965	.933	.812,-1	.750,-1	.118	.117	-.419,-2	.809,-1	-.167,-1
04	.371	.957	.930	.781,-2	.745,-1	.125	.126	-.541,-1	.909,-1	-.305,-1
05	.363	.941	.920	-.107,-2	.720,-1	.119	.144	-.156,-1	.757,-1	-.365,-1
06	.358	.951	.918	-.268,-2	.644,-1	.110	.158	-.276,-1	.560,-1	-.348,-1	
07	.365	.957	.901	-.455,-2	.555,-1	.104	.168	-.340,-1	.408,-1	-.344,-1
08	.348	.961	.115	.875,-2	.291,-1	.896,-1	.155	-.100,-1	.846,-1	-.988,-3
09	.330	.956	.151	.851,-2	.290,-1	.919,-1	.151	.741,-2	.550,-1	.185,-1
10	.318	.937	.117	.954,-2	.414,-1	.877,-1	.122	.161,-1	.846,-1	-.817,-2
11	.375	.191	.107	.961,-1	.520,-1	.870,-1	.135	.508,-1	.908,-1	-.666,-2
12	.358	.177	.105	.941,-1	.611,-1	.937,-1	.147	.441,-1	.557,-1	.551,-2
13	.391	.160	.101	.644,-1	.704,-1	.107	.132	.575,-1	.519,-1	.141,-1
14	.387	.140	.935,-1	.979,-1	.781,-1	.118	.109	.655,-1	.570,-1	.447,-1
15	.312	.150	.787,-1	.193	.857,-1	.106	.786,-1	.809,-1	.835,-1	.516,-1
16	.310	.111	.479,-1	.154	.861,-1	.963,-1	.540,-1	.809,-1	.642,-2	.546,-1
17	.143	.197	.498,-1	.196	.894,-1	.857,-1	.960,-2	.787,-1	.181,-1	-.807,-2
18	.196	.115	.569,-1	.115	.907,-1	.101	.963,-1	.894,-1	.176,-1	-.455,-1
19	.115	.100	.584,-1	.858,-1	.852,-1	.124	.641,-1	.105	.154,-1	-.508,-1
20	.110	.105	.476,-1	.878,-1	.968,-1	.107	.667,-1	.955,-1	-.161,-1	-.636,-1
21	.110	.104	.904,-1	.727,-1	.111	.197	.697,-1	.101	-.176,-1	-.606,-1
22	.196	.961,-1	.668,-1	.876,-1	.117	.945,-1	.961,-1	.106	-.115,-2	-.400,-1
23	.153	.969,-1	.644,-1	.841,-1	.112	.104	.645,-1	.101	.515,-2	-.241,-1
24	.175	.951,-1	.571,-1	.648,-1	.000,-1	.196	.645,-1	.967,-1	.160,-1	-.411,-1
25	.171	.767,-1	.557,-1	.751,-1	.909,-1	.110	.518,-1	.100	.835,-1	-.684,-1
26	.171	.675,-1	.680,-1	.769,-1	.101	.104	.781,-1	.967,-1	.648,-1	-.661,-1
27	.168	.707,-1	.644,-1	.735,-1	.964	.110	.755,-1	.818,-1	.640,-2	-.964,-1
28	.185	.969,-1	.694,-1	.967,-1	.155	.178	.650,-1	.945,-1	.156,-1	-.419,-1
29	.169	.969,-1	.587,-1	.804,-1	.145	.114	.951,-1	.678,-1	.871,-1	-.405,-1
30	.149	.868,-1	.946,-1	.764,-1	.182	.109	.815,-1	.658,-1	.807,-1	-.501,-1
31	.156	.748,-2	.927,-1	.866,-1	.108	.180	.707,-1	.660,-1	.117,-2	-.212,-1
32	.110	.160,-1	.864,-1	.856,-1	.844,-1	.105	.664,-1	.644,-1	.526,-2	-.185,-1
33	.867,-1	.544,-1	.105	.716,-1	.955,-1	.111	.655,-1	.698,-1	.111,-1	-.912,-2
34	.860,-1	.649,-1	.101	.692,-1	.870	.115	.618,-1	.754,-1	.596,-2	-.164,-1
35	.795,-1	.593,-1	.108	.508,-1	.107	.118	.166,-1	.779,-1	.648,-1	-.899,-1
36	.751,-1	.578,-1	.085,-1	.166,-1	.797,-1	.970,-1	.875,-2	.670,-1	.578,-1	-.694,-1
37	.790,-1	.146,-1	.577,-1	.799,-2	.685,-1	.815,-1	.159,-2	.104	.159,-1	-.405,-1
38	.760,-1	.865,-2	.567,-1	-.757,-2	.666,-1	.847,-1	-.541,-1	.999,-1	.640,-2	-.455,-1
39	.650,-1	.518,-2	-.616,-2	.555,-2	.648,-1	.636,-1	-.515,-1	.116	.110,-1	-.406,-1
40	.518,-1	-.144,-1	-.865,-1	-.148,-1	.581,-1	.530,-1	-.518,-1	.159	.856,-1	-.593,-1
41	.660,-1	-.845,-1	-.897,-1	-.549,-1	.818,-1	.699,-1	-.587,-1	.196	.880,-1	-.505,-1
42	.819,-1	-.500,-1	-.185,-1	-.365,-1	.157,-1	.185,-1	-.801,-1	.185	.557,-1	-.518,-1
43	.776,-1	-.801,-1	-.181,-1	-.566,-1	.886,-2	.672,-2	.106,-2	.189	.727,-1	-.118,-1
44	.702,-1	-.701,-1	-.540,-1	-.854,-1	-.815,-1	-.156,-1	-.840,-1	.180	.615,-1	.891,-2
45	.565,-1	-.641,-1	-.584,-1	-.198,-1	-.150,-1	-.970,-2	-.458,-1	.106	.408,-1	.668,-1
46	.591,-1	-.554,-1	-.145,-1	.156,-1	-.155,-1	-.876,-1	-.707,-1	.109	.832,-1	.858,-1
47	.507,-1	-.611,-1	-.657,-1	.876,-2	-.802,-1	-.864,-1	-.438,-1	.997,-1	.515,-1	.568,-1
48	.515,-1	-.671,-1	-.605,-1	.177,-1	-.784,-2	-.148,-1	-.107	.915,-1	.564,-1	.585,-1
49	.451,-2	-.610,-2	-.609,-1	.594,-1	-.687,-2	-.184,-1	-.854,-1	.881,-1	.854,-1	.155,-1
50	-.105,-2	-.447,-1	-.451,-1	.729,-1	-.155,-1	-.990,-2	-.550,-1	.858,-1	.111,-1	-.319,-1
51	.595,-3	-.568,-1	-.855,-1	.670,-1	-.708,-2	-.845,-1	-.512,-1	.978,-1	-.799,-2	-.378,-1
52	.119,-1	-.141,-2	-.188,-1	.745,-1	-.771,-2	-.517,-1	-.246,-1	.969,-1	-.849,-1	-.585,-1
53	.819,-2	.177,-3	-.507,-1	.850,-1	.154,-1	-.554,-1	-.169,-1	.116	-.617,-1	-.825,-1
54	-.124,-1	-.884,-1	-.545,-1	.865,-1	.559,-2	-.894,-1	-.187,-1	.112	-.419,-1	-.158,-1
55	-.775,-2	-.550,-1	-.580,-1	.787,-1	-.895,-1	-.416,-1	-.102,-1	.885,-1	-.158,-1	-.164,-1
56	-.384,-1	-.518,-1	-.518,-1	.615,-1	-.861,-1	-.998,-1	-.896,-1	.860,-1	-.735,-2	-.871,-1
57	-.845,-1	-.870,-1	-.509,-1	.678,-1	-.487,-1	-.536,-1	-.130,-1	.755,-1	.154,-2	-.845,-1
58	-.174,-2	-.807,-1	-.619,-1	.485,-1	-.586,-1	-.680,-1	-.846,-1	.709,-1	.878,-2	-.586,-1
59	-.474,-3	-.174,-1	-.571,-1	.547,-1	-.582,-1	-.585,-1	-.979,-2	.904,-1	.567,-2	-.618,-1
60	.401,-1	-.375,-1	-.331,-1	.897,-1	-.628,-1	-.591,-1	-.157,-1	.972,-1	-.856,-2	-.595,-1

Run No. 83 ; v component

Separation Distance (x_)

K	6	10	18	24	36	42	48	72	84	90
00	.405	.242	.183	.177	.896,-1	.101	.665,-1	-.424,-1	.117,-1	.440,-1
01	.264	.177	.176	.144	.805,-1	.130	.519,-1	-.523,-1	.203,-1	.515,-1
02	.259	.142	.147	.107	.126	.112	.378,-1	.257,-1	.568,-1	.655,-1
03	.233	.149	.133	.130	.905,-1	.146	.391,-1	-.207,-2	.732,-1	.612,-1
04	.170	.114	.116	.159	.115	.147	.345,-1	.170,-1	.875,-1	.147,-1
05	.134	.109	.131	.148	.955,-1	.157	.680,-1	.564,-1	.101,-1	.520,-1
06	.149	.140	.182	.163	.118	.910,-1	.712,-1	.719,-1	.476,-1	.772,-1
07	.187	.960,-1	.114	.170	. 93	.775,-1	.554,-1	.104	.525,-1	.599,-1
08	.959,-1	.678,-1	.114	.150	.775,-1	.670,-1	.600,-1	.641,-1	.641,-1	.791,-1	
09	.105	.810,-1	.108	.173	.775,-1	.851,-1	.561,-1	.180,-1	.595,-1	.832,-1	
10	.694,-1	.801,-1	.775,-1	.181	.995,-1	.997,-1	.855,-2	.685,-1	.559,-1	.905,-1	
11	.569,-1	.688,-1	.506,-1	.119	.108	.107	-.165,-2	.356,-1	.250,-1	.840,-1	
12	.460,-1	.557,-1	.310,-1	.108	.996,-1	.718,-1	.550,-1	.187,-1	.956,-1	.899,-1	
13	.646,-1	.590,-1	.453,-1	.119	.607,-1	.634,-1	.177,-1	-.429,-2	.960,-2	.180,-1	
14	.502,-1	.754,-1	.401,-1	.167	.804,-1	.686,-1	.402,-1	.611,-1	.928,-1	-.107,-1	
15	.650,-2	.479,-1	-.477,-2	.159	.701,-1	.108,-1	.364,-1	.155,-1	.190,-1	.196,-1	
16	-.108,-2	.698,-1	.164,-1	.916,-1	.774,-1	.677,-1	.480,-1	.648,-1	.594,-1	.515,-1	
17	.140,-1	.683,-1	-.206,-1	.108	.988,-1	.818,-1	.118,-1	.511,-1	.353,-1	.799,-1	
18	-.345,-1	.930,-1	.995,-1	.115	.876,-1	.794,-1	-.555,-2	-.605,-2	.185,-1	.470,-1	
19	.955,-5	.345,-1	.555,-1	.144,-1	.904,-1	.699,-1	-.817,-1	.145,-1	.580,-1	.468,-1	
20	.[illegible]	.[illegible]	.[illegible]	.[illegible]	.646,-1	.685,-1	-.818,-1	.140,-1	.592,-1	.489,-1	
21	-.579,-1	.784,-1	.176,-1	.109	.671,-1	.540,-1	.857,-2	.[illegible]	.[illegible]	.[illegible]	
22	-.799,-1	.389,-1	-.145,-2	.179	.401,-1	.886,-2	-.101,-1	.540,-1	.976,-2	.477,-1	
23	-.899,-1	-.856,-2	-.003	.157	.801,-2	.950,-1	-.551,-1	.116,-1	.910,-1	-.569,-3	
24	-.895,-1	.861,-1	.894,-1	.155	.987,-1	.995,-1	-.857,-2	.519,-1	.161,-1	.941,-2	
25	-.[illegible]	-.880,-3	-.804,-1	.751,-1	.807,-1	.579,-1	-.817,-1	.[illegible]	.712,-2	.[illegible]	
26	-.[illegible]	.[illegible]	.518,-1	.104	.[illegible]	.510,-1	.154,-1	.[illegible]	.194,-1	.417,-1	
27	-.575,-3	.[illegible]	-.199,-1	.965,-1	.[illegible]	.589,-1	.[illegible]	.[illegible]	.576,-1	.[illegible]	
28	.177,-2	.[illegible]	-.154,-1	.[illegible]	.981,-1	.611,-1	.127,-1	-.645,-3	.569,-1	.[illegible]	
29	-.158,-1	.[illegible]	.[illegible]	.661,-1	.117	.[illegible]	.[illegible]	.[illegible]	.[illegible]	.[illegible]	
30	.754,-2	.797,-1	.557,-1	.115	.[illegible]	.[illegible]	.[illegible]	.[illegible]	.[illegible]	.[illegible]	
31	-.[illegible]	.[illegible]	.[illegible]	.107	.[illegible]	.[illegible]	.[illegible]	.[illegible]	.[illegible]	.[illegible]	
32	-.[illegible]	.[illegible]	-.[illegible]	.[illegible]	.[illegible]	.[illegible]	.[illegible]	.[illegible]	.[illegible]	.[illegible]	
33	.[illegible]	.[illegible]	-.[illegible]	.[illegible]	.[illegible]	.[illegible]	.[illegible]	.[illegible]	.[illegible]	.[illegible]	
34	.[illegible]	.[illegible]	.[illegible]	.[illegible]	.[illegible]	.[illegible]	.[illegible]	.[illegible]	.[illegible]	.[illegible]	
35	.[illegible]	.[illegible]	.[illegible]	.[illegible]	.[illegible]	.[illegible]	.[illegible]	.[illegible]	.[illegible]	.[illegible]	
36	.[illegible]	.[illegible]	.[illegible]	.[illegible]	.[illegible]	.[illegible]	.[illegible]	.[illegible]	.[illegible]	.[illegible]	
37	.[illegible]	.[illegible]	.[illegible]	.[illegible]	.[illegible]	.[illegible]	.[illegible]	.[illegible]	.[illegible]	.[illegible]	
38	.[illegible]	.[illegible]	.[illegible]	.[illegible]	.[illegible]	.[illegible]	.[illegible]	.[illegible]	.[illegible]	.[illegible]	
39	.[illegible]	.[illegible]	.[illegible]	.[illegible]	.[illegible]	.[illegible]	.[illegible]	.[illegible]	.[illegible]	.[illegible]	
40	.[illegible]	.[illegible]	.[illegible]	.[illegible]	.[illegible]	.[illegible]	.[illegible]	.[illegible]	.[illegible]	.[illegible]	
41	.[illegible]	.[illegible]	.[illegible]	.[illegible]	.[illegible]	.[illegible]	.[illegible]	.[illegible]	.[illegible]	.[illegible]	
42	.[illegible]	.[illegible]	.[illegible]	.[illegible]	.[illegible]	.[illegible]	.[illegible]	.[illegible]	.[illegible]	.[illegible]	
43	.[illegible]	.[illegible]	.[illegible]	.[illegible]	.[illegible]	.[illegible]	.[illegible]	.[illegible]	.[illegible]	.[illegible]	
44	.[illegible]	.[illegible]	.[illegible]	.[illegible]	.[illegible]	.[illegible]	.[illegible]	.[illegible]	.[illegible]	.[illegible]	
45	.[illegible]	.[illegible]	.[illegible]	.[illegible]	.[illegible]	.[illegible]	.[illegible]	.[illegible]	.[illegible]	.[illegible]	
46	.[illegible]	.[illegible]	.[illegible]	.[illegible]	.[illegible]	.[illegible]	.[illegible]	.[illegible]	.[illegible]	.[illegible]	
47	.[illegible]	.[illegible]	.[illegible]	.[illegible]	.[illegible]	.[illegible]	.[illegible]	.[illegible]	.[illegible]	.[illegible]	
48	.[illegible]	.[illegible]	.[illegible]	.[illegible]	.[illegible]	.[illegible]	.[illegible]	.[illegible]	.[illegible]	.[illegible]	
49	.[illegible]	.[illegible]	.[illegible]	.[illegible]	.[illegible]	.[illegible]	.[illegible]	.[illegible]	.[illegible]	.[illegible]	
50	.[illegible]	.[illegible]	.[illegible]	.[illegible]	.[illegible]	.[illegible]	.[illegible]	.[illegible]	.[illegible]	.[illegible]	
51	.[illegible]	.[illegible]	.[illegible]	.[illegible]	.[illegible]	.[illegible]	.[illegible]	.[illegible]	.[illegible]	.[illegible]	
52	.[illegible]	.[illegible]	.[illegible]	.[illegible]	.[illegible]	.[illegible]	.[illegible]	.[illegible]	.[illegible]	.[illegible]	
53	.[illegible]	.[illegible]	.[illegible]	.[illegible]	.[illegible]	.[illegible]	.[illegible]	.[illegible]	.[illegible]	.[illegible]	
54	.[illegible]	.[illegible]	.[illegible]	.[illegible]	.[illegible]	.[illegible]	.[illegible]	.[illegible]	.[illegible]	.[illegible]	
55	.[illegible]	.[illegible]	.[illegible]	.[illegible]	.[illegible]	.[illegible]	.[illegible]	.[illegible]	.[illegible]	.[illegible]	
56	.[illegible]	.[illegible]	.[illegible]	.[illegible]	.[illegible]	.[illegible]	.[illegible]	.[illegible]	.[illegible]	.[illegible]	
57	.[illegible]	.[illegible]	.[illegible]	.[illegible]	.[illegible]	.[illegible]	.[illegible]	.[illegible]	.[illegible]	.[illegible]	
58	.[illegible]	.[illegible]	.[illegible]	.[illegible]	.[illegible]	.[illegible]	.[illegible]	.[illegible]	.[illegible]	.[illegible]	
59	.[illegible]	.[illegible]	.[illegible]	.[illegible]	.[illegible]	.[illegible]	.[illegible]	.[illegible]	.[illegible]	.[illegible]	
60	.546,-1	.728,-1	.117	.321,-1	.640,-1	.119	.457,-1	-.407,-2	.568,-3	.926,-1	

Run no. 24 ; u component

Separation Distance (m.)

K	6	12	18	24	30	42	48	72	96	90
00	.387	.303	.[illegible]	.177	.196,-1	.446,-1	.941,-1	.206,-0	-.[illegible],-1	-.917,-1
01	.352	.172	.[illegible]	.110	.619,-1	.218,-1	.312,-1	-.436,-1	-.780,-1	-.619,-1
02	.314	.170	.[illegible]	.107	.433,-1	.161,-1	.383,-1	-.221,-1	-.711,-1	-.595,-1
03	.279	.201	.175	.112	.326,-1	.119,-1	.446,-1	-.147,-1	-.695,-1	-.580,-1
04	.865	.255	.[illegible],-1	.108	.432,-1	.187,-1	.519,-1	-.109,-1	-.739,-1	-.597,-1
05	.255	.251	.[illegible],-1	.106	.578,-1	.250,-1	.[illegible],-1	-.[illegible],-0	-.518,-1	-.646,-1
06	.212	.[illegible]	.[illegible],-1	.113	.555,-1	.516,-1	.[illegible],-0	-.115,-1	-.[illegible],-1	-.[illegible],-1
07	.[illegible]	.[illegible]	.[illegible],-1	.155	.[illegible],-1	.[illegible],-1	-.[illegible],-1	-.[illegible],-1	-.[illegible],-1	-.[illegible],-1
08	.[illegible]	.[illegible]	.[illegible],-1	.[illegible]	.[illegible],-1	.[illegible],-1	-.[illegible],-1	-.[illegible],-0	-.[illegible],-1	-.[illegible],-1
09	.[illegible]	.[illegible]	.[illegible],-1	.[illegible]	.[illegible],-1	.[illegible],-1	-.[illegible],-1	-.[illegible],-0	-.[illegible],-1	-.[illegible]
10	.[illegible]	.[illegible]	.[illegible],-1	.[illegible]	.[illegible],-1	-.[illegible],-1	-.[illegible],-1	-.[illegible],-1	-.[illegible],-0	-.[illegible],-1
11	.[illegible]	.[illegible]	.[illegible],-1	.[illegible]	.[illegible],-1	.[illegible],-1	-.[illegible],-1	.[illegible],-0	.[illegible],-1	-.[illegible],-1
12	.[illegible],-1	.[illegible]	.[illegible],-1	.[illegible]	.[illegible],-1	-.[illegible],-1	-.[illegible],-1	.[illegible],-0	.[illegible],-1	-.[illegible],-1
13	.[illegible]	.[illegible]	.[illegible],-1	.[illegible]	.[illegible],-1	-.[illegible],-1	-.[illegible],-1	.[illegible],-0	.[illegible],-1	-.[illegible],-1
14	.[illegible]	.[illegible]	.[illegible],-1	.[illegible]	.[illegible],-1	-.[illegible],-1	-.[illegible],-1	.[illegible],-0	.[illegible],-1	-.[illegible],-1
15	.[illegible],-1	.[illegible]	.[illegible],-1	.[illegible]	.[illegible],-1	-.[illegible],-1	-.[illegible],-1	.[illegible],-0	.[illegible],-1	-.[illegible],-1
16	.[illegible],-1	.[illegible]	.[illegible],-1	.[illegible]	.[illegible],-1	-.[illegible],-1	-.[illegible],-1	.[illegible],-0	.[illegible],-1	-.[illegible],-1
17	.[illegible],-0	.[illegible]	.[illegible],-1	.[illegible]	.[illegible],-1	-.[illegible],-1	-.[illegible],-1	.[illegible],-0	.[illegible],-1	-.[illegible],-1
18	-.[illegible],-1	.[illegible]	.[illegible],-1	.[illegible]	.[illegible],-1	-.[illegible],-1	-.[illegible],-1	-.[illegible],-1	-.[illegible],-1	-.[illegible],-1
19	-.[illegible],-1	.[illegible]	.[illegible],-1	.[illegible]	.[illegible],-1	-.[illegible],-1	-.[illegible],-1	-.[illegible],-1	-.[illegible],-0	-.[illegible],-1
20	-.[illegible],-1	.[illegible],-1	.[illegible],-1	.[illegible]	.[illegible],-1	-.[illegible],-1	-.[illegible],-1	-.[illegible],-1	-.[illegible],-1	-.[illegible],-1
21	-.[illegible],-1	.[illegible],-1	.[illegible],-1	.[illegible]	.[illegible],-1	-.[illegible],-1	-.[illegible],-1	-.[illegible],-1	-.[illegible],-1	-.[illegible],-1
22	-.[illegible],-1	.[illegible],-1	.[illegible],-1	.[illegible]	.[illegible],-1	-.[illegible],-1	-.[illegible],-1	-.[illegible],-1	-.[illegible],-1	-.[illegible],-1
23	-.[illegible],-1	.[illegible],-1	.[illegible],-1	.[illegible]	.[illegible],-1	-.[illegible],-1	-.[illegible],-1	-.[illegible],-1	-.[illegible],-1	-.[illegible],-1
24	-.[illegible],-1	.[illegible],-1	.[illegible],-1	.[illegible]	.[illegible],-1	-.[illegible],-1	-.[illegible],-1	-.[illegible],-1	-.[illegible],-1	-.[illegible],-1
25	-.[illegible]	.[illegible],-1	.[illegible],-1	.[illegible]	.[illegible],-1	-.[illegible],-1	-.[illegible],-1	-.[illegible],-1	-.[illegible],-1	-.[illegible],-1
26	-.[illegible]	.[illegible],-1	.[illegible],-1	.[illegible]	.[illegible],-1	-.[illegible],-1	-.[illegible],-1	-.[illegible],-1	-.[illegible],-1	-.[illegible],-1
27	-.[illegible]	.[illegible],-1	.[illegible],-1	.[illegible]	.[illegible],-1	-.[illegible],-1	-.[illegible],-1	-.[illegible],-1	-.[illegible],-1	-.[illegible],-1
28	-.[illegible]	.[illegible],-1	.[illegible],-1	.[illegible]	.[illegible],-1	-.[illegible],-1	-.[illegible],-1	-.[illegible],-1	-.[illegible],-1	-.[illegible],-1
29	-.[illegible]	.[illegible],-1	.[illegible],-1	.[illegible]	.[illegible],-1	-.[illegible],-1	-.[illegible],-1	-.[illegible],-1	-.[illegible],-1	-.[illegible],-1
30	-.[illegible]	.[illegible],-1	.[illegible],-1	.[illegible]	.[illegible],-1	-.[illegible],-1	-.[illegible],-1	-.[illegible],-1	-.[illegible],-1	-.[illegible],-1
31	-.[illegible]	.[illegible],-1	.[illegible],-1	.[illegible]	.[illegible],-1	-.[illegible],-1	-.[illegible],-1	-.[illegible],-1	-.[illegible],-1	-.[illegible],-1
32	-.[illegible]	.[illegible],-1	.[illegible],-1	.[illegible]	.[illegible],-1	-.[illegible],-1	-.[illegible],-1	-.[illegible],-1	-.[illegible],-1	-.[illegible],-1
33	-.[illegible]	.[illegible],-1	.[illegible],-1	.[illegible]	.[illegible],-1	-.[illegible],-1	-.[illegible],-1	-.[illegible],-1	-.[illegible],-1	-.[illegible],-1
34	-.[illegible]	.[illegible],-1	.[illegible],-1	.[illegible]	.[illegible],-1	-.[illegible],-1	-.[illegible],-1	-.[illegible],-1	-.[illegible],-1	-.[illegible],-1
35	-.[illegible]	.[illegible],-1	.[illegible],-1	.[illegible]	.[illegible],-1	-.[illegible],-1	-.[illegible],-1	-.[illegible],-1	-.[illegible],-1	-.[illegible],-1
36	-.[illegible]	.[illegible],-1	.[illegible],-1	.[illegible]	.[illegible],-1	-.[illegible],-1	-.[illegible],-1	-.[illegible],-1	-.[illegible],-1	-.[illegible],-1
37	-.[illegible]	.[illegible],-1	.[illegible],-1	.[illegible]	.[illegible],-1	-.[illegible],-1	-.[illegible],-1	-.[illegible],-1	-.[illegible],-1	-.[illegible],-1
38	-.[illegible]	.[illegible],-1	.[illegible],-1	.[illegible]	.[illegible],-1	-.[illegible],-1	-.[illegible],-1	-.[illegible],-1	-.[illegible],-1	-.[illegible],-1
39	-.[illegible]	.[illegible],-1	.[illegible],-1	.[illegible]	.[illegible],-1	-.[illegible],-1	-.[illegible],-1	-.[illegible],-1	-.[illegible],-1	-.[illegible],-1
40	-.[illegible]	.[illegible],-1	.[illegible],-1	.[illegible]	.[illegible],-1	-.[illegible],-1	-.[illegible],-1	-.[illegible],-1	-.[illegible],-1	-.[illegible],-1
41	-.[illegible]	.[illegible],-1	.[illegible],-1	.[illegible]	.[illegible],-1	-.[illegible],-1	-.[illegible],-1	-.[illegible],-1	-.[illegible],-1	-.[illegible],-1
42	-.[illegible]	.[illegible],-1	.[illegible],-1	.[illegible]	.[illegible],-1	-.[illegible],-1	-.[illegible],-1	-.[illegible],-1	-.[illegible],-1	-.[illegible],-1
43	-.[illegible]	.[illegible],-1	.[illegible],-1	.[illegible]	.[illegible],-1	-.[illegible],-1	-.[illegible],-1	-.[illegible],-1	-.[illegible],-1	-.[illegible],-1
44	-.[illegible]	.[illegible],-1	.[illegible],-1	.[illegible]	.[illegible],-1	-.[illegible],-1	-.[illegible],-1	-.[illegible],-1	-.[illegible],-1	-.[illegible],-1
45	-.[illegible]	.[illegible],-1	.[illegible],-1	.[illegible]	.[illegible],-1	-.[illegible],-1	-.[illegible],-1	-.[illegible],-1	-.[illegible],-1	-.[illegible],-1
46	-.[illegible]	.[illegible],-1	.[illegible],-1	.[illegible]	.[illegible],-1	-.[illegible],-1	-.[illegible],-1	-.[illegible],-1	-.[illegible],-1	-.[illegible],-1
47	-.[illegible]	.[illegible],-1	.[illegible],-1	.[illegible]	.[illegible],-1	-.[illegible],-1	-.[illegible],-1	-.[illegible],-1	-.[illegible],-1	-.[illegible],-1
48	-.[illegible]	.[illegible],-1	.[illegible]	.[illegible],-1	.[illegible],-1	-.[illegible],-1	-.[illegible],-1	-.[illegible],-1	-.[illegible],-1	-.[illegible],-1
49	-.[illegible]	.[illegible],-1	.[illegible],-1	.[illegible],-1	.[illegible],-1	-.[illegible],-1	-.[illegible],-1	-.[illegible],-1	-.[illegible],-1	-.[illegible],-1
50	-.[illegible]	.[illegible],-1	.[illegible],-1	.[illegible],-1	.[illegible],-1	-.[illegible],-1	-.[illegible],-1	-.[illegible],-1	-.[illegible],-1	-.[illegible],-1
51	-.[illegible]	.[illegible],-1	.[illegible],-1	.[illegible],-1	.[illegible],-1	-.[illegible],-1	-.[illegible],-1	-.[illegible],-1	-.[illegible],-1	-.[illegible],-1
52	-.[illegible]	.[illegible],-1	.[illegible],-1	.[illegible],-1	.[illegible],-1	-.[illegible],-1	-.[illegible],-1	-.[illegible],-1	-.[illegible],-1	-.[illegible],-1
53	-.[illegible]	.[illegible],-1	.[illegible],-1	.[illegible],-1	.[illegible],-1	-.[illegible],-1	-.[illegible],-1	-.[illegible],-1	-.[illegible],-1	-.[illegible],-1
54	-.[illegible]	.[illegible],-1	.[illegible],-1	.[illegible],-1	.[illegible],-1	-.[illegible],-1	-.[illegible],-1	-.[illegible],-1	-.[illegible],-1	-.[illegible],-1
55	-.[illegible]	.[illegible],-1	.[illegible],-1	.[illegible],-1	.[illegible],-1	-.[illegible],-1	-.[illegible],-1	-.[illegible],-1	-.[illegible],-1	-.[illegible],-1
56	-.[illegible]	.[illegible],-1	.[illegible],-1	.[illegible],-1	.[illegible],-1	-.[illegible],-1	-.[illegible],-1	-.[illegible],-1	-.[illegible],-1	-.[illegible],-1
57	-.[illegible]	.[illegible],-1	.[illegible],-1	.[illegible],-1	.[illegible],-1	-.[illegible],-1	-.[illegible],-1	-.[illegible],-1	-.[illegible],-1	-.[illegible],-1
58	-.[illegible]	.[illegible],-1	.[illegible],-1	.[illegible],-1	.[illegible],-1	-.[illegible],-1	-.[illegible],-1	-.[illegible],-1	-.[illegible],-1	-.[illegible],-1
59	-.[illegible]	.[illegible],-1	.[illegible],-1	.[illegible],-1	.[illegible],-1	-.[illegible],-1	-.[illegible],-1	-.[illegible],-1	-.[illegible],-1	-.[illegible],-1
60	-.[illegible],-1	-.154	.[illegible],-2	-.[illegible],-1	.[illegible],-2	-.[illegible],-2	-.[illegible],-1	.[illegible],-1	.[illegible],-1	.[illegible],-1

Run No. 24 : V component

Separation Distance (m.)

K	6	12	18	24	36	48	60	72	84	90
00	.415	.269	.176	.141	.751,-1	.464,-1	.775,-2	.441,-1	.675,-1	.597,-1
01	.440	.281	.259	.117	.747,-1	.466,-1	.150,-1	.515,-1	.490,-1	.594,-1
02	.347	.316	.200	.941,-1	.910,-1	.492,-1	.156,-1	.618,-1	.546,-1	.566,-1
03	.256	.201	.227	.760,-1	.611,-1	.564,-1	.307,-1	.370,-1	.456,-1	.167,-1
04	.221	.204	.246	.135	.621,-1	.159,-1	.250,-2	.414,-1	.241,-1	.568,-1
05	.155	.105	.122	.154	.210,-1	.113,-1	.264,-1	.305,-1	.704,-1	.272,-2
06	.121	.151	.120	.129	.550,-1	.150,-2	.791,-1	.577,-1	.185,-1	.510,-1
07	.146	.147	.178	.111	.622,-1	.158,-1	.267,-1	.274,-1	.255,-1	.555,-1
08	.109	.191	.136	.146	.571,-1	.441,-1	.796,-1	.456,-1	.917,-1	-.146,-2
09	.840,-1	.150	.111	.107	.506,-1	.459,-1	.601,-1	.854,-1	.970,-1	-.101,-2
10	.756,-1	.140	.115	.836,-1	.561,-1	.536,-1	.455,-1	.411,-1	.125,-1	.176,-2
11	.611,-1	.119	.921,-1	.525,-1	.450,-1	.535,-1	.921,-1	.611,-1	.115,-1	-.142,-1
12	.412,-1	.126	.761,-1	.451,-1	.757,-1	.276,-1	- .510,-2	.179,-1	.469,-1	-.161,-2
13	.315	.110	.121	.[illegible]	.[illegible]	.[illegible]	.212,-1	.[illegible]	.[illegible]	.199,-1
14	.[illegible]	.[illegible]	.114	.[illegible]	.111	.[illegible]	.[illegible]	.[illegible]	.[illegible]	.[illegible]
15	.[illegible]	.[illegible]	.111	.[illegible]	.[illegible]	.[illegible]	.[illegible]	.[illegible]	.[illegible]	.[illegible]
16	.[illegible]	.[illegible]	.[illegible]	.[illegible]	.[illegible]	.[illegible]	.[illegible]	.[illegible]	.[illegible]	.[illegible]
17	.[illegible]	.[illegible]	.[illegible]	.[illegible]	.[illegible]	.[illegible]	.[illegible]	.[illegible]	.[illegible]	.[illegible]
18	.[illegible]	.[illegible]	.[illegible]	.[illegible]	.[illegible]	.[illegible]	.[illegible]	.[illegible]	.[illegible]	.[illegible]
19	.[illegible]	.[illegible]	.[illegible]	.[illegible]	.[illegible]	.[illegible]	.[illegible]	.[illegible]	.[illegible]	.[illegible]
20	.[illegible]	.[illegible]	.[illegible]	.[illegible]	.[illegible]	.[illegible]	.[illegible]	.[illegible]	.[illegible]	.[illegible]
21	.[illegible]	.[illegible]	.[illegible]	.[illegible]	.[illegible]	.[illegible]	.[illegible]	.[illegible]	.[illegible]	.[illegible]
22	.[illegible]	.[illegible]	.[illegible]	.[illegible]	.[illegible]	.[illegible]	.[illegible]	.[illegible]	.[illegible]	.[illegible]
23	.[illegible]	.[illegible]	.[illegible]	.[illegible]	.[illegible]	.[illegible]	.[illegible]	.[illegible]	.[illegible]	.[illegible]
24	.[illegible]	.[illegible]	.[illegible]	.[illegible]	.[illegible]	.[illegible]	.[illegible]	.[illegible]	.[illegible]	.[illegible]
25	.[illegible]	.[illegible]	.[illegible]	.[illegible]	.[illegible]	.[illegible]	.[illegible]	.[illegible]	.[illegible]	.[illegible]
26	.[illegible]	.[illegible]	.[illegible]	.[illegible]	.[illegible]	.[illegible]	.[illegible]	.[illegible]	.[illegible]	.[illegible]
27	.[illegible]	.[illegible]	.[illegible]	.[illegible]	.[illegible]	.[illegible]	.[illegible]	.[illegible]	.[illegible]	.[illegible]
28	.[illegible]	.[illegible]	.[illegible]	.[illegible]	.[illegible]	.[illegible]	.[illegible]	.[illegible]	.[illegible]	.[illegible]
29	.[illegible]	.[illegible]	.[illegible]	.[illegible]	.[illegible]	.[illegible]	.[illegible]	.[illegible]	.[illegible]	.[illegible]
30	.[illegible]	.[illegible]	.[illegible]	.[illegible]	.[illegible]	.[illegible]	.[illegible]	.[illegible]	.[illegible]	.[illegible]
31	.[illegible]	.[illegible]	.[illegible]	.[illegible]	.[illegible]	.[illegible]	.[illegible]	.[illegible]	.[illegible]	.[illegible]
32	.[illegible]	.[illegible]	.[illegible]	.[illegible]	.[illegible]	.[illegible]	.[illegible]	.[illegible]	.[illegible]	.[illegible]
33	.[illegible]	.[illegible]	.[illegible]	.[illegible]	.[illegible]	.[illegible]	.[illegible]	.[illegible]	.[illegible]	.[illegible]
34	.[illegible]	.[illegible]	.[illegible]	.[illegible]	.[illegible]	.[illegible]	.[illegible]	.[illegible]	.[illegible]	.[illegible]
35	.[illegible]	.[illegible]	.[illegible]	.[illegible]	.[illegible]	.[illegible]	.[illegible]	.[illegible]	.[illegible]	.[illegible]
36	.[illegible]	.[illegible]	.[illegible]	.[illegible]	.[illegible]	.[illegible]	.[illegible]	.[illegible]	.[illegible]	.[illegible]
37	.[illegible]	.[illegible]	.[illegible]	.[illegible]	.[illegible]	.[illegible]	.[illegible]	.[illegible]	.[illegible]	.[illegible]
38	.[illegible]	.[illegible]	.[illegible]	.[illegible]	.[illegible]	.[illegible]	.[illegible]	.[illegible]	.[illegible]	.[illegible]
39	.[illegible]	.[illegible]	.[illegible]	.[illegible]	.[illegible]	.[illegible]	.[illegible]	.[illegible]	.[illegible]	.[illegible]
40	.[illegible]	.[illegible]	.[illegible]	.[illegible]	.[illegible]	.[illegible]	.[illegible]	.[illegible]	.[illegible]	.[illegible]
41	.[illegible]	.[illegible]	.[illegible]	.[illegible]	.[illegible]	.[illegible]	.[illegible]	.[illegible]	.[illegible]	.[illegible]
42	.[illegible]	.[illegible]	.[illegible]	.[illegible]	.[illegible]	.[illegible]	.[illegible]	.[illegible]	.[illegible]	.[illegible]
43	.[illegible]	.[illegible]	.[illegible]	.[illegible]	.[illegible]	.[illegible]	.[illegible]	.[illegible]	.[illegible]	.[illegible]
44	.[illegible]	.[illegible]	.[illegible]	.[illegible]	.[illegible]	.[illegible]	.[illegible]	.[illegible]	.[illegible]	.[illegible]
45	-.[illegible]	.[illegible]	.[illegible]	.[illegible]	.[illegible]	.[illegible]	.[illegible]	.[illegible]	-.[illegible]	.[illegible]
46	-.[illegible]	-.[illegible]	-.[illegible]	.[illegible]	-.[illegible]	.[illegible]	.[illegible]	-.[illegible]	-.[illegible]	-.[illegible]
47	.[illegible]	.[illegible]	-.[illegible]	-.[illegible]	.[illegible]	.[illegible]	.[illegible]	.[illegible]	.[illegible]	.[illegible]
48	-.[illegible]	-.[illegible]	.[illegible]	-.[illegible]	.[illegible]	.[illegible]	.[illegible]	.[illegible]	-.[illegible]	-.[illegible]
49	-.[illegible]	-.[illegible]	-.[illegible]	-.[illegible]	.[illegible]	.[illegible]	.[illegible]	.[illegible]	-.[illegible]	-.[illegible]
50	-.[illegible]	-.[illegible]	-.[illegible]	.[illegible]	-.[illegible]	.[illegible]	.[illegible]	-.[illegible]	-.[illegible]	-.[illegible]
51	-.[illegible]	-.[illegible]	-.[illegible]	.[illegible]	.[illegible]	.[illegible]	.[illegible]	.[illegible]	.[illegible]	.[illegible]
52	-.[illegible]	-.[illegible]	.[illegible]	.[illegible]	.[illegible]	.[illegible]	.[illegible]	.[illegible]	.[illegible]	.[illegible]
53	-.[illegible]	.[illegible]	-.[illegible]	-.[illegible]	-.[illegible]	.[illegible]	.[illegible]	.[illegible]	.[illegible]	.[illegible]
54	-.[illegible]	-.[illegible]	-.[illegible]	-.[illegible]	-.[illegible]	-.[illegible]	.[illegible]	.[illegible]	-.[illegible]	-.[illegible]
55	-.715,-1	.135,-1	-.465,-2	-.[illegible]	-.[illegible]	-.[illegible]	.[illegible]	.[illegible]	-.[illegible]	-.[illegible]
56	-.[illegible]	-.[illegible]	.[illegible]	-.[illegible]	-.[illegible]	-.[illegible]	.[illegible]	.[illegible]	.[illegible]	-.[illegible]
57	-.[illegible]	-.[illegible]	.[illegible]	-.[illegible]	-.[illegible]	-.[illegible]	.[illegible]	.[illegible]	-.[illegible]	-.[illegible]
58	-.[illegible]	-.[illegible]	.[illegible]	.[illegible]	-.[illegible]	.[illegible]	.[illegible]	.[illegible]	.[illegible]	.[illegible]
59	-.[illegible]	-.[illegible]	.[illegible]	-.[illegible]	-.[illegible]	-.[illegible]	.[illegible]	.[illegible]	.[illegible]	.[illegible]
60	.394,-1	-.113	-.[illegible]	-.[illegible]	-.[illegible]	-.[illegible]	.[illegible]	.[illegible]	.[illegible]	.[illegible]

Run No. 27 ; u component

Separation Distance (m_s)

y_s	0	12	24	36	48	60	72	84	0
00	.555	.410	.[illegible]						
01	.[illegible]	.[illegible]	.[illegible]						
02	.[illegible]	.[illegible]	.[illegible]						
03	.550	.[illegible]	.[illegible]						
04	.[illegible]	.[illegible]	.[illegible]						
05	.[illegible]	.[illegible]	.[illegible]						
06	.[illegible]	.[illegible]	.[illegible]						

Run No. 27 ; v component

Separation Distance (m.)

R	6	12	18	24	30	42	54	72	96	120
00	.661	.630	.559							
01	.720	.621	.525							
02	.705	.600	.505							
03	.667	.551	.459							
04	.604	.547	.471							
05	.554	.504	.446							
06	.520	.465	.428							
07	.475	.447	.407							
08	.455	.436	.392							
09	.427	.399	.370							
10	.400	.371	.375							
11	.391	.398	.377							
12	.392	.376	.341							
13	.369	.359	.331							
14	.361	.340	.315							
15	.337	.324	.309							
16	.324	.307	.298							
17	.317	.297	.318							
18	.342	.313	.327							
19	.315	.317	.327							
80	.307	.308	.299							
81	.343	.303	.279							
82	.292	.290	.277							
83	.281	.274	.271							
84	.305	.291	.295							
85	.306	.276	.254							
86	.268	.269	.247							
87	.256	.256	.240							
88	.277	.242	.241							
89	.264	.239	.233							
90	.261	.240	.234							
91	.252	.231	.235							
92	.268	.246	.237							
93	.261	.237	.262							
94	.311	.274	.249							
95	.314	.274	.261							
96	.315	.270	.260							
97	.264,-1	.256	.262							
98	.268,-1	.271	.257							
99	.258,-1	.254	.274							
00	.242,-1	.267	.262							
01	.264,-1	.261	.256							
02	.272,-1	.230	.249							
03	.251,-1	.230	.242							
04	.247,-1	.246	.274							
05	.208	.250	.270							
06	.201	.227	.275							
07	.251,-1	.255	.266							
08	.258,-1	.215	.270							
09	.243,-1	.214	.291							
10	.247,-1	.201	.274							
11	.240,-1	.197	.278							
12	.245,-1	.187	.259							
13	.237,-1	.177	.241							
14	.237,-1	.167	.232							
15	.232,-1	.156	.221							
16	.230,-1	.138	.208							
17	.225,-1	.964,-1	.217,-1							
18	.250,-1	.909,-1	.208,-1							
19	.247,-1	.774,-1	.178,-1							
60	.215,-1	.640,-1	.245,-1							

Run No. 32 ; u component

Separation Distance (m)

K	6	12	18	24	30	42	48	72	84	90
00	.858	.851	.849	.847	.850	.850	.852	.846	.850	.850
01	.789	.786	.787	.846	.841	.846	.845	.844	.852	.847
02	.716	.714	.714	.810	.851	.852	.845	.842	.813	.846
03	.718	.722	.750	.856	.856	.852	.785	.840	.814	.659
04	.837	.842	.845	.847	.850	.847	.796	.845	.826	.857
05	.870	.861	.846	.849	.840	.846	.851	.852	.851	.855
06	.860	.853	.853	.841	.852	.845	.851	.857	.847	.857
07	.855	.852	.856	.855	.855	.846	.846	.841	.855	.860
08	.846	.851	.848	.857	.855	.849	.847	.845	.853	.852
09	.856	.846	.846	.851	.855	.854	.805	.845	.857	.855
10	.829	.850	.846	.856	.859	.854	.846	.846	.856	.858
11	.845	.851	.848	.855	.855	.855	.846	.844	.856	.852
12	.852	.854	.857	.854	.854	.857	.812	.857	.851	.850
13	.846	.846	.846	.845	.854	.855	.846	.851	.847	.853
14	.849	.846	.846	.851	.851	.854	.846	.846	.851	.850
15	.850	.846	.846	.849	.847	.850	.848	.845	.851	.848
16	.859	.850	.846	.846	.848	.851	.851	.846	.846	.850
17	.846	.849	.848	.846	.853	.857	.851	.847	.851	.853
18	.858	.855	.846	.845	.846	.846	.846	.846	.851	.850
19	.849	.857	.851	.846	.846	.849	.838	.845	.848	.848
20	.850	.851	.855	.847	.846	.846	.851	.846	.847	.847
21	.851	.846	.855	.847	.849	.846	.848	.847	.848	.848
22	.848	.846	.855	.846	.850	.846	.847	.846	.846	.851
23	.849	.854	.850	.847	.847	.846	.845	.846	.849	.845
24	.847	.850	.847	.847	.851	.851	.846	.846	.848	.851
25	.850	.846	.847	.847	.851	.851	.847	.846	.847	.847
26	.851	.846	.850	.848	.851	.851	.848	.848	.846	.847
27	.851	.851	.852	.846	.851	.851	.848	.853	.846	.846
28	.849	.854	.850	.847	.847	.851	.848	.851	.851	.848
29	.848	.846	.847	.846	.847	.851	.846	.846	.847	.848
30	.852	.851	.854	.851	.851	.851	.848	.851	.851	.849
31	.848	.851	.850	.851	.850	.851	.847	.846	.850	.848
32	.852	.852	.851	.851	.851	.851	.847	.846	.846	.850
33	.848	.851	.851	.851	.851	.851	.848	.846	.847	.848
34	.849	.853	.851	.846	.846	.851	.847	.847	.847	.848
35	.851	.851	.851	.851	.851	.851	.851	.851	.851	.851
36	.851	.851	.851	.851	.851	.851	.851	.851	.851	.851
37	.851	.851	.851	.851	.851	.851	.851	.851	.851	.851
38	.851	.851	.851	.851	.851	.851	.851	.851	.851	.851
39	.851	.851	.851	.851	.851	.851	.851	.851	.851	.851
40	.851	.851	.851	.851	.851	.851	.851	.851	.851	.851
41	.851	.851	.851	.851	.851	.851	.851	.851	.851	.851
42	.851	.851	.851	.851	.851	.851	.851	.851	.851	.851
43	.851	.851	.851	.851	.851	.851	.851	.851	.851	.851
44	.851	.851	.851	.851	.851	.851	.851	.851	.851	.851
45	.851	.851	.851	.851	.851	.851	.851	.851	.851	.851
46	.851	.851	.851	.851	.851	.851	.851	.851	.851	.851
47	.851	.851	.851	.851	.851	.851	.851	.851	.851	.851
48	.851	.851	.851	.851	.851	.851	.851	.851	.851	.851
49	.851	.851	.851	.851	.851	.851	.851	.851	.851	.851
50	.851	.851	.851	.851	.851	.851	.851	.851	.851	.851
51	.851	.851	.851	.851	.851	.851	.851	.851	.851	.851
52	.851	.851	.851	.851	.851	.851	.851	.851	.851	.851
53	.851	.851	.851	.851	.851	.851	.851	.851	.851	.851
54	.851	.851	.851	.851	.851	.851	.851	.851	.851	.851
55	.851	.851	.851	.851	.851	.851	.851	.851	.851	.851
56	.851	.851	.851	.851	.851	.851	.851	.851	.851	.851
57	.851	.851	.851	.851	.851	.851	.851	.851	.851	.851
58	.851	.851	.851	.851	.851	.851	.851	.851	.851	.851
59	.851	.851	.851	.851	.851	.851	.851	.851	.851	.851
60	.851	.851	.851	.851	.851	.851	.851	.851	.851	.851

Run No. 32 ; v component

Separation Distance (m.)

K	6	18	18	24	36	42	60	72	84	90
00	.908,-1	.133	.128	.129	.716,-1	.124	.104	.426,-1	.751,-1	.935,-1
01	.131	.160	.164	.174	.133	.176	.117	.[illegible],-1	.[illegible],-1	.115
02	.586	.215	.145	.194	.151	.142	.146	.[illegible],-1	.[illegible],-1	.137
03	.175	.318	.185	.198	.165	.150	.155	.572,-1	.[illegible],-1	.108
04	.192	.277	.216	.184	.165	.151	.[illegible],-1	.[illegible],-1	.[illegible],-1	.107,-1
05	.188,-1	.[illegible]	.[illegible]	.179	.162	.162	.144	.121	.[illegible],-1	.[illegible],-1
06	.[illegible],-1	.[illegible]	.[illegible]	.168	.155	.179	.124	.118	.[illegible],-1	.[illegible],-1
07	.[illegible],-1	.[illegible]	.[illegible]	.[illegible]	.[illegible]	.[illegible]	.[illegible]	.[illegible]	.[illegible],-1	.[illegible],-1
08	.[illegible],-1	.[illegible]	.[illegible]	.[illegible]	.[illegible]	.[illegible]	.[illegible],-1	.[illegible]	.[illegible],-1	.[illegible]
09	.[illegible],-1	.[illegible]	.[illegible],-1	.[illegible]	.[illegible]	.[illegible]	.[illegible]	.[illegible]	.[illegible]	.[illegible]
10	.[illegible],-1	.[illegible]	.[illegible]	.[illegible]	.[illegible]	.[illegible],-1	.[illegible]	.[illegible]	.[illegible],-1	.[illegible],-1
11	.[illegible]	.[illegible]	.[illegible]	.[illegible]	.[illegible]	.[illegible]	.[illegible]	.[illegible],-1	.[illegible],-1	.[illegible]
12	.[illegible],-1	.[illegible]	.[illegible]	.[illegible]	.[illegible]	.[illegible]	.[illegible]	.[illegible],-1	.[illegible],-1	.[illegible]
13	.[illegible],-1	.[illegible]	.[illegible],-1	.[illegible]	.[illegible]	.[illegible],-1	.[illegible],-1	.[illegible]	.[illegible],-1	.[illegible]
14	.[illegible],-1	.[illegible]	.[illegible]	.[illegible]	.[illegible]	.[illegible],-1	.[illegible]	.[illegible]	.[illegible],-1	.[illegible]
15	.[illegible],-1	.[illegible],-1	.[illegible]	.[illegible],-1	.[illegible]	.[illegible]	.[illegible],-1	.[illegible]	.[illegible]	.[illegible]
16	.[illegible],-1	.[illegible],-1	.[illegible],-1	.[illegible],-1	.[illegible],-1	.[illegible],-1	.[illegible]	.[illegible]	.[illegible],-1	.[illegible]
17	.[illegible],-1	.[illegible]	.[illegible],-1	.[illegible]	.[illegible]	.[illegible]	.[illegible],-1	.[illegible],-1	.[illegible],-1	.[illegible]
18	.[illegible],-1	.[illegible],-1	.[illegible],-1	.[illegible],-1	.[illegible],-1	.[illegible],-1	.[illegible],-1	.[illegible],-1	.[illegible],-1	.[illegible],-1
19	.[illegible],-1	.[illegible]	.[illegible],-1	.[illegible],-1	.[illegible],-1	.[illegible],-1	.[illegible],-1	.[illegible],-1	.[illegible],-1	.[illegible]
20	.[illegible],-1	.[illegible],-1	.[illegible],-1	.[illegible],-1	.[illegible],-1	.[illegible],-1	.[illegible],-1	.[illegible],-1	.[illegible],-1	.[illegible],-1
21	.[illegible],-1	.[illegible],-1	.[illegible],-1	.[illegible],-1	.[illegible],-1	.[illegible],-1	.[illegible],-1	.[illegible],-1	.[illegible],-1	.[illegible],-1
22	.[illegible],-1	.[illegible]	.[illegible],-1	.[illegible],-1	.[illegible],-1	.[illegible],-1	.[illegible],-1	.[illegible],-1	.[illegible],-1	.[illegible]
23	.[illegible],-1	.[illegible],-1	.[illegible],-1	.[illegible],-1	.[illegible],-1	.[illegible],-1	.[illegible],-1	.[illegible],-1	.[illegible],-1	.[illegible],-1
24	.[illegible],-1	.[illegible],-1	.[illegible],-1	.[illegible],-1	.[illegible],-1	.[illegible],-1	.[illegible],-1	.[illegible],-1	.[illegible],-1	.[illegible],-1
25	-.127,-1	.161	.[illegible],-1	.[illegible],-1	.[illegible],-1	.[illegible],-1	.[illegible],-1	.[illegible],-1	-.[illegible],-1	.[illegible],-1
26	.[illegible],-1	.[illegible]	.[illegible],-1	.[illegible],-1	-.[illegible],-1	.[illegible],-1	.[illegible],-1	.[illegible],-1	.[illegible],-1	.[illegible],-1
27	.[illegible],-1	.[illegible],-1	.[illegible],-1	.[illegible],-1	.[illegible],-1	.[illegible],-1	.[illegible]	.[illegible],-1	.[illegible],-1	.[illegible],-1
28	-.[illegible],-1	.[illegible],-1	.[illegible],-1	-.[illegible],-1	.[illegible],-1	.[illegible],-1	.[illegible],-1	.[illegible],-1	.[illegible],-1	.[illegible],-1
29	-.[illegible],-1	.[illegible],-1	.[illegible],-1	.[illegible],-1	.[illegible],-1	.[illegible],-1	.[illegible],-1	.[illegible],-1	.[illegible],-1	.[illegible],-1
30	-.[illegible],-1	.[illegible],-1	.[illegible],-1	.[illegible],-1	.[illegible],-1	.[illegible],-1	.[illegible],-1	.[illegible],-1	.[illegible],-1	.[illegible],-1
31	.[illegible],-1	.[illegible],-1	.[illegible],-1	.[illegible],-1	.[illegible],-1	.[illegible],-1	.[illegible],-1	.[illegible],-1	.[illegible],-1	.[illegible],-1
32	-.[illegible],-1	.[illegible],-1	.[illegible],-1	.[illegible],-1	.[illegible],-1	.[illegible],-1	.[illegible],-1	.[illegible],-1	.[illegible],-1	.[illegible],-1
33	-.[illegible],-1	.[illegible],-1	.[illegible],-1	.[illegible],-1	.[illegible],-1	.[illegible],-1	.[illegible],-1	.[illegible],-1	.[illegible],-1	.[illegible],-1
34	-.[illegible],-1	.[illegible],-1	.[illegible],-1	.[illegible],-1	.[illegible],-1	.[illegible],-1	.[illegible],-1	.[illegible],-1	.[illegible],-1	.[illegible],-1
35	-.[illegible],-1	.[illegible],-1	.[illegible],-1	.[illegible],-1	.[illegible],-1	.[illegible],-1	.[illegible],-1	.[illegible],-1	.[illegible],-1	.[illegible],-1
36	.[illegible],-1	.[illegible],-1	.[illegible],-1	.[illegible],-1	.[illegible],-1	.[illegible],-1	.[illegible],-1	.[illegible],-1	.[illegible],-1	.[illegible],-1
37	.[illegible],-1	.[illegible],-1	.[illegible],-1	.[illegible],-1	.[illegible],-1	.[illegible],-1	.[illegible],-1	.[illegible],-1	.[illegible],-1	.[illegible],-1
38	-.[illegible],-1	.[illegible],-1	.[illegible],-1	-.[illegible],-1	.[illegible],-1	.[illegible],-1	.[illegible],-1	.[illegible],-1	.[illegible],-1	.[illegible],-1
39	-.[illegible],-1	.[illegible],-1	.[illegible],-1	-.[illegible],-1	.[illegible],-1	.[illegible],-1	.[illegible],-1	.[illegible],-1	.[illegible],-1	.[illegible],-1
40	-.[illegible],-1	.[illegible],-1	.[illegible],-1	-.[illegible],-1	.[illegible],-1	.[illegible],-1	-.[illegible],-1	-.[illegible],-1	-.[illegible],-1	-.[illegible],-1
41	.[illegible],-1	.[illegible],-1	-.[illegible],-1	-.[illegible],-1	.[illegible],-1	.[illegible],-1	-.[illegible],-1	-.[illegible],-1	.[illegible],-1	.[illegible],-1
42	.[illegible],-1	.[illegible],-1	.[illegible],-1	-.[illegible],-1	.[illegible],-1	.[illegible],-1	.[illegible],-1	-.[illegible],-1	.[illegible],-1	-.[illegible],-1
43	.[illegible],-1	.[illegible],-1	-.[illegible],-1	.[illegible],-1	.[illegible],-1	.[illegible],-1	.[illegible],-1	-.[illegible],-1	-.[illegible],-1	.[illegible],-1
44	.[illegible],-1	.[illegible],-1	-.[illegible],-1	.[illegible],-1	.[illegible],-1	.[illegible],-1	.[illegible],-1	.[illegible],-1	.[illegible],-1	.[illegible],-1
45	-.[illegible],-1	.[illegible],-1	.[illegible],-1	-.[illegible],-1	.[illegible],-1	.[illegible],-1	-.[illegible],-1	.[illegible],-1	-.[illegible],-1	-.[illegible],-1
46	-.[illegible],-1	-.[illegible],-1	.[illegible],-1	.[illegible],-1	.[illegible],-1	.[illegible],-1	.[illegible],-1	.[illegible],-1	.[illegible],-1	.[illegible],-1
47	.[illegible],-1	.[illegible],-1	.[illegible],-1	.[illegible],-1	.[illegible],-1	.[illegible],-1	.[illegible],-1	.[illegible],-1	.[illegible],-1	.[illegible],-1
48	-.[illegible],-1	.[illegible],-1	.[illegible],-1	-.[illegible],-1	.[illegible],-1	.[illegible],-1	.[illegible],-1	.[illegible],-1	.[illegible],-1	.[illegible],-1
49	-.[illegible],-1	.[illegible],-1	.[illegible],-1	.[illegible],-1	.[illegible],-1	.[illegible],-1	.[illegible],-1	.[illegible],-1	.[illegible],-1	.[illegible],-1
50	.[illegible],-1	.[illegible]	.[illegible],-1	.[illegible],-1	.[illegible],-1	.[illegible],-1	.[illegible],-1	.[illegible],-1	.[illegible],-1	.[illegible],-1
51	-.[illegible],-1	.[illegible],-1	.[illegible],-1	.[illegible],-1	.[illegible],-1	.[illegible],-1	.[illegible],-1	.[illegible],-1	.[illegible],-1	.[illegible],-1
52	.[illegible],-1	.[illegible],-1	.[illegible],-1	.[illegible],-1	.[illegible],-1	.[illegible],-1	.[illegible],-1	.[illegible],-1	.[illegible],-1	.[illegible],-1
53	.[illegible],-1	.[illegible],-1	.[illegible],-1	.[illegible],-1	.[illegible],-1	.[illegible],-1	.[illegible],-1	.[illegible],-1	.[illegible],-1	.[illegible],-1
54	.[illegible],-1	.[illegible],-1	.[illegible],-1	.[illegible],-1	.[illegible],-1	.[illegible],-1	.[illegible],-1	.[illegible],-1	.[illegible],-1	.[illegible],-1
55	-.[illegible],-1	.[illegible],-1	.[illegible],-1	.[illegible],-1	.[illegible],-1	.[illegible],-1	.[illegible],-1	.[illegible],-1	.[illegible],-1	.[illegible],-1
56	-.[illegible],-1	.[illegible]	.[illegible],-1	.[illegible],-1	.[illegible],-1	.[illegible],-1	.[illegible],-1	.[illegible],-1	.[illegible],-1	.[illegible],-1
57	.[illegible],-1	.[illegible],-1	.[illegible],-1	.[illegible],-1	.[illegible],-1	.[illegible],-1	.[illegible],-1	.[illegible],-1	.[illegible],-1	.[illegible],-1
58	.[illegible],-1	.[illegible],-1	.[illegible],-1	.[illegible],-1	.[illegible],-1	.[illegible],-1	.[illegible],-1	.[illegible],-1	.[illegible],-1	.[illegible],-1
59	.[illegible],-1	.[illegible],-1	.[illegible],-1	.[illegible],-1	.[illegible],-1	.[illegible],-1	.[illegible],-1	.[illegible],-1	.[illegible],-1	.[illegible],-1
60	.392,-2	-.[illegible],-1	.[illegible],-1	-.[illegible],-1	.[illegible],-1	.[illegible],-2	.[illegible],-1	-.[illegible],-1	-.[illegible],-1	.[illegible],-1

Run No. 35aj u component

Separation Distance (m.)

K	6	12	18	24	36	48	60	72	84	90
00	.327	.345	.393	.370	.445	.505	.465	.405	.406	.327
01	.325	.359	.347	.401	.431	.515	.351	.365	.410	.326
02	.332	.346	.350	.370	.431	.514	.355	.364	.420	.328
03	.334	.329	.350	.328	.416	.502	.367	.357	.434	.331
04	.340	.305	.320	.401	.419	.495	.341	.372	.444	.302
05	.335	.351	.291	.400	.402	.496	.411	.374	.450	.297
06	.335	.340	.297	.411	.403	.510	.421	.357	.425	.296
07	.318	.333	.315	.416	.402	.514	.417	.357	.418	.296
08	.306	.329	.306	.401	.413	.501	.431	.372	.414	.290
09	.297	.321	.304	.415	.402	.507	.397	.319	.410	.290
10	.297	.302	.302	.401	.395	.501	.371	. .	.415	.296
11	.305	.306	.296	.402	.401	.515	.421	.357	.408	.295
12	.307	.305	.301	.401	.403	.510	.405	.361	.403	.294
13	.300	.297	.291	.399	.405	.500	.415	.371	.417	.295
14	.300	.299	.291	.399	.410	.504	.397	.371	.410	.294
15	.307	.300	.301	.398	.400	.505	.396	.376	.401	.299
16	.305	.305	.296	.399	.401	.505	.395	.377	.398	.295
17	.296	.304	.292	.391	.401	.504	.399	.360	.401	.270
18	.291	.302	.290	.395	.402	.501	.395	.365	.405	.291
19	.295	.298	.298	.396	.402	.504	.399	.364	.407	.290
20	.295	.296	.298	.398	.401	.501	.395	.376	.409	.296
21	.291	.299	.291	.401	.402	.499	.407	.377	.401	.287
22	.295	.299	.301	.398	.403	.499	.419	.396	.403	.292
23	.277	.301	.295	.395	.403	.499	.418	.395	.403	.294
24	.296	.295	.296	.399	.402	.501	.401	.394	.404	.293
25	.296	.289	.300	.399	.399	.502	.396	.397	.399	.296
26	.294	.296	.299	.396	.402	.499	.401	.396	.403	.294
27	.296	.296	.299	.396	.402	.499	.401	.396	.403	.294
28	.293	.295	.295	.396	.399	.499	.401	.396	.403	.294
29	.293	.295	.295	.396	.399	.499	.401	.396	.403	.294
30	.293	.295	.295	.396	.399	.499	.401	.396	.403	.294
31	.293	.295	.295	.396	.399	.499	.401	.396	.403	.294
32	.293	.295	.295	.396	.399	.499	.401	.396	.403	.294
33	.293	.295	.295	.396	.399	.499	.401	.396	.403	.294
34	.293	.295	.295	.396	.399	.499	.401	.396	.403	.294
35	.293	.295	.295	.396	.399	.499	.401	.396	.403	.294
36	.293	.295	.295	.396	.399	.499	.401	.396	.403	.294
37	.293	.295	.295	.396	.399	.499	.401	.396	.403	.294
38	.293	.295	.295	.396	.399	.499	.401	.396	.403	.294
39	.293	.295	.295	.396	.399	.499	.401	.396	.403	.294
40	.293	.295	.295	.396	.399	.499	.401	.396	.403	.294
41	.293	.295	.295	.396	.399	.499	.401	.396	.403	.294
42	.293	.295	.295	.396	.399	.499	.401	.396	.403	.294
43	.293	.295	.295	.396	.399	.499	.401	.396	.403	.294
44	.293	.295	.295	.396	.399	.499	.401	.396	.403	.294
45	.293	.295	.295	.396	.399	.499	.401	.396	.403	.294
46	.293	.295	.295	.396	.399	.499	.401	.396	.403	.294
47	.293	.295	.295	.396	.399	.499	.401	.396	.403	.294
48	.293	.295	.295	.396	.399	.499	.401	.396	.403	.294
49	.293	.295	.295	.396	.399	.499	.401	.396	.403	.294
50	.293	.295	.295	.396	.399	.499	.401	.396	.403	.294
51	.293	.295	.295	.396	.399	.499	.401	.396	.403	.294
52	.293	.295	.295	.396	.399	.499	.401	.396	.403	.294
53	.293	.295	.295	.396	.399	.499	.401	.396	.403	.294
54	.293	.295	.295	.396	.399	.499	.401	.396	.403	.294
55	.293	.295	.295	.396	.399	.499	.401	.396	.403	.294
56	.293	.295	.295	.396	.399	.499	.401	.396	.403	.294
57	.293	.295	.295	.396	.399	.499	.401	.396	.403	.294
58	.293	.295	.295	.396	.399	.499	.401	.396	.403	.294
59	.293	.295	.295	.396	.399	.499	.401	.396	.403	.294
60	.293	.295	.295	.396	.399	.499	.401	.396	.403	.294

Run No. 356; v component

	Separation distance (m.)									
K	6	12	18	24	36	48	60	72	84	96
00	.531	.254	.166	.248	.205	.229	.255	.178	.251	.160
01	.266	.277	.176	.211	.247	.227	.267	.171	.190	.190
02	.220	.240	.210	.199	.273	.251	.266	.206	.250	.248
03	.200	.214	.210	.145	.271	.220	.284	.207	.212	.201
04	.176	.210	.198	.189	.262	.234	.249	.171	.224	.189
05	.264	.205	.157	.225	.247	.2[illegible]	.255	.145	.225	.201
06	.209	.169	.180	.206	.239	.239	.254	.146	.251	.212
07	.216	.146	.185	.185	.258	.256	.255	.156	.241	.250
08	.200	.198	.198	.185	.242	.211	.277	.191	.247	.255
09	.205	.224	.223	.198	.230	.256	.240	.214	.247	.248
10	.250	.154	.190	.174	.250	.197	.210	.215	.257	.201
11	.229	.149	.221	.191	.252	.224	.252	.166	.241	.177
12	.241	.215	.178	.198	.241	.176	.248	.197	.207	.190
13	.210	.224	.148	.152	.264	.187	.245	.192	.187	.190
14	.204	.187	.231	.187	.217	.221	.229	.251	.191	.176
15	.215	.199	.167	.127	.225	.213	.235	.210	.234	.161
16	.221	.149	.167	.217	.242	.254	.248	.218	.178	.196
17	.190	.230	.178	.193	.254	.227	.264	.144	.212	.232
18	.146	.192	.171	.175	.256	.201	.241	.210	.256	.178
19	.210	.227	.167	.197	.240	.220	.241	.201	.221	.206
20	.196	.206	.164	.119	.222	.211	.216	.167	.216	.224
21	.235	.142	.148	.255	.218	.211	.225	.197	.218	.215
22	.215	.176	.168	.219	.221	.174	.249	.160	.225	.199
23	.214	.210	.137	.192	.231	.254	.240	.172	.220	.199
24	.212	.187	.163	.174	.234	.210	.241	.192	.217	.208
25	.229	.150	.161	.196	.217	.192	.210	.148	.245	.245
26	.190	.218	.155	.198	.224	.187	.218	.194	.221	.186
27	.198	.197	.169	.222	.246	.191	.218	.167	.221	.185
28	.197	.197	.166	.205	.21[illegible]	.197	.196	.165	.220	.171
29	.209	.156	.171	.190	.234	.218	.231	.160	.220	.215
30	.193	.160	.150	.172	.235	.221	.243	.165	.217	.176
31	.195	.155	.216	.179	.219	.[illegible]	.262	.156	.195	.191
32	.168	.166	.161	.195	.[illegible]	.207	.225	.161	.162	.182
33	.191	.193	.157	.196	.226	.227	.232	.150	.166	.191
34	.207	.151	.150	.179	.217	.208	.225	.167	.179	.166
35	.196	.172	.[illegible],-1	.195	.[illegible]	.221	.194	.179	.197	.[illegible]
36	.179	.184	.168	.146	.[illegible]	.226	.[illegible]	.176	.165	.195
37	.[illegible]	.115	.181	.178	.[illegible]	.[illegible]	.[illegible]	.155	.178	.[illegible]
38	.[illegible]	.158	.165	.[illegible]	.[illegible]	.[illegible]	.225	.167	.[illegible]	.184
39	.196	.169	.170	.[illegible]	.257	.217	.[illegible]	.156	.160	.191
40	.210	.188	.179	.191	.[illegible]	.[illegible]	.[illegible]	.158	.159	.191
41	.179	.[illegible]	.[illegible]	.[illegible]	.[illegible]	.227	.227	.211	.[illegible]	.[illegible]
42	.[illegible]	.179	.[illegible]	.[illegible]	.[illegible]	.[illegible]	.178	.195	.[illegible]	.[illegible]
43	.[illegible]	.197	.[illegible]	.155	.180	.[illegible]	.150	.160	.[illegible]	.[illegible]
44	.178	.[illegible]	.[illegible]	.[illegible]	.[illegible]	.[illegible]	.[illegible]	.[illegible]	.[illegible]	.[illegible]
45	.[illegible]	.[illegible]	.197	.[illegible]	.[illegible]	.[illegible]	.[illegible]	.[illegible]	.[illegible]	.[illegible]
46	.[illegible]	.[illegible]	.[illegible]	.[illegible]	.[illegible]	.[illegible]	.[illegible]	.[illegible]	.[illegible]	.[illegible]
47	.[illegible]	.[illegible]	.[illegible]	.[illegible]	.[illegible]	.[illegible]	.[illegible]	.[illegible]	.[illegible]	.[illegible]
48	.[illegible]	.[illegible]	.[illegible]	.[illegible]	.[illegible]	.[illegible]	.[illegible]	.[illegible]	.[illegible]	.[illegible]
49	.[illegible]	.[illegible]	.[illegible]	.[illegible]	.[illegible]	.[illegible]	.[illegible]	.[illegible]	.[illegible]	.[illegible]
50	.[illegible]	.[illegible]	.[illegible]	.[illegible]	.[illegible]	.[illegible]	.[illegible]	.[illegible]	.[illegible]	.[illegible]
51	.[illegible]	.[illegible]	.[illegible]	.[illegible]	.[illegible]	.[illegible]	.[illegible]	.[illegible]	.[illegible]	.[illegible]
52	.[illegible]	.[illegible]	.[illegible]	.[illegible]	.[illegible]	.[illegible]	.[illegible]	.[illegible]	.[illegible]	.[illegible]
53	.[illegible]	.[illegible]	.[illegible]	.[illegible]	.[illegible]	.[illegible]	.[illegible]	.[illegible]	.[illegible]	.[illegible]
54	.[illegible]	.[illegible]	.[illegible]	.[illegible]	.[illegible]	.[illegible]	.[illegible]	.[illegible]	.[illegible]	.[illegible]
55	.[illegible]	.[illegible]	.[illegible]	.[illegible]	.[illegible]	.[illegible]	.[illegible]	.[illegible]	.[illegible]	.[illegible]
56	.[illegible]	.[illegible]	.[illegible]	.[illegible]	.[illegible]	.[illegible]	.[illegible]	.[illegible]	.[illegible]	.[illegible]
57	.[illegible]	.[illegible]	.[illegible]	.[illegible]	.[illegible]	.[illegible]	.[illegible]	.[illegible]	.[illegible]	.[illegible]
58	.[illegible]	.[illegible]	.[illegible]	.[illegible]	.[illegible]	.[illegible]	.[illegible]	.[illegible]	.[illegible]	.[illegible]
59	.[illegible]	.[illegible]	.[illegible]	.[illegible]	.[illegible]	.[illegible]	.[illegible]	.[illegible]	.[illegible]	.[illegible]
60	.[illegible]	.[illegible]	.[illegible]	.[illegible]	.[illegible]	.[illegible]	.[illegible]	.[illegible]	.[illegible]	.[illegible]
61	.[illegible]	.[illegible]	.[illegible]	.[illegible]	.[illegible]	.[illegible]	.[illegible]	.[illegible]	.[illegible]	.[illegible]
62	.[illegible]	.[illegible]	.[illegible]	.[illegible]	.[illegible]	.[illegible]	.[illegible]	.[illegible]	.[illegible]	.[illegible]
63	.[illegible]	.[illegible]	.[illegible]	.[illegible]	.[illegible]	.[illegible]	.[illegible]	.[illegible]	.[illegible]	.[illegible]
64	.[illegible]	.[illegible]	.[illegible]	.[illegible]	.[illegible]	.[illegible]	.[illegible]	.[illegible]	.[illegible]	.[illegible]
65	.[illegible]	.[illegible]	.[illegible]	.[illegible]	.[illegible]	.[illegible]	.[illegible]	.[illegible]	.[illegible]	.[illegible]
66	.[illegible]	.[illegible]	.[illegible]	.[illegible]	.[illegible]	.[illegible]	.[illegible]	.[illegible]	.[illegible]	.[illegible]
67	.[illegible]	.[illegible]	.[illegible]	.[illegible]	.[illegible]	.[illegible]	.[illegible]	.[illegible]	.[illegible]	.[illegible]
68	.[illegible]	.[illegible]	.[illegible]	.[illegible]	.[illegible]	.[illegible]	.[illegible]	.[illegible]	.[illegible]	.[illegible]
69	.[illegible]	.[illegible]	.[illegible]	.[illegible]	.[illegible]	.[illegible]	.[illegible]	.[illegible]	.[illegible]	.[illegible]
70	.[illegible]	.[illegible]	.[illegible]	.[illegible]	.[illegible]	.[illegible]	.[illegible]	.[illegible]	.[illegible]	.[illegible]
71	.[illegible]	.[illegible]	.[illegible]	.[illegible]	.[illegible]	.[illegible]	.[illegible]	.[illegible]	.[illegible]	.[illegible]
72	.[illegible]	.[illegible]	.[illegible]	.[illegible]	.[illegible]	.[illegible]	.[illegible]	.[illegible]	.[illegible]	.[illegible]
73	.[illegible]	.[illegible]	.[illegible]	.[illegible]	.[illegible]	.[illegible]	.[illegible]	.[illegible]	.[illegible]	.[illegible]
74	.[illegible]	.[illegible]	.[illegible]	.[illegible]	.[illegible]	.[illegible]	.[illegible]	.[illegible]	.[illegible]	.[illegible]
75	.[illegible]	.[illegible]	.[illegible]	.[illegible]	.[illegible]	.[illegible]	.[illegible]	.[illegible]	.[illegible]	.[illegible]
76	.[illegible]	.[illegible]	.[illegible]	.[illegible]	.[illegible]	.[illegible]	.[illegible]	.[illegible]	.[illegible]	.[illegible]
77	.[illegible]	.[illegible]	.[illegible]	.[illegible]	.[illegible]	.[illegible]	.[illegible]	.[illegible]	.[illegible]	.[illegible]
78	.[illegible]	.[illegible]	.[illegible]	.[illegible]	.[illegible]	.[illegible]	.[illegible]	.[illegible]	.[illegible]	.[illegible]
79	.[illegible]	.[illegible]	.[illegible]	.[illegible]	.[illegible]	.[illegible]	.[illegible]	.[illegible]	.[illegible]	.[illegible]
80	.[illegible]	.[illegible]	.[illegible]	.[illegible]	.[illegible]	.[illegible]	.[illegible]	.[illegible]	.[illegible]	.[illegible]
81	.[illegible]	.[illegible]	.[illegible]	.[illegible]	.[illegible]	.[illegible]	.[illegible]	.[illegible]	.[illegible]	.[illegible]
82	.[illegible]	.[illegible]	.[illegible]	.[illegible]	.[illegible]	.[illegible]	.[illegible]	.[illegible]	.[illegible]	.[illegible]
83	.[illegible]	.[illegible]	.[illegible]	.[illegible]	.[illegible]	.[illegible]	.[illegible]	.[illegible]	.[illegible]	.[illegible]
84	.[illegible]	.[illegible]	.[illegible]	.[illegible]	.[illegible]	.[illegible]	.[illegible]	.[illegible]	.[illegible]	.[illegible]
85	.[illegible]	.[illegible]	.[illegible]	.[illegible]	.[illegible]	.[illegible]	.[illegible]	.[illegible]	.[illegible]	.[illegible]
86	.[illegible]	.[illegible]	.[illegible]	.[illegible]	.[illegible]	.[illegible]	.[illegible]	.[illegible]	.[illegible]	.[illegible]
87	.[illegible]	.[illegible]	.[illegible]	.[illegible]	.[illegible]	.[illegible]	.[illegible]	.[illegible]	.[illegible]	.[illegible]
88	.[illegible]	.[illegible]	.[illegible]	.[illegible]	.[illegible]	.[illegible]	.[illegible]	.[illegible]	.[illegible]	.[illegible]
89	.[illegible]	.[illegible]	.[illegible]	.[illegible]	.[illegible]	.[illegible]	.[illegible]	.[illegible]	.[illegible]	.[illegible]
90	.[illegible]	.[illegible]	.[illegible]	.[illegible]	.[illegible]	.[illegible]	.[illegible]	.[illegible]	.[illegible]	.[illegible]
91	.[illegible]	.[illegible]	.[illegible]	.[illegible]	.[illegible]	.[illegible]	.[illegible]	.[illegible]	.[illegible]	.[illegible]
92	.[illegible]	.[illegible]	.[illegible]	.[illegible]	.[illegible]	.[illegible]	.[illegible]	.[illegible]	.[illegible]	.[illegible]
93	.[illegible]	.[illegible]	.[illegible]	.[illegible]	.[illegible]	.[illegible]	.[illegible]	.[illegible]	.[illegible]	.[illegible]
94	.[illegible]	.[illegible]	.[illegible]	.[illegible]	.[illegible]	.[illegible]	.[illegible]	.[illegible]	.[illegible]	.[illegible]
95	.[illegible]	.[illegible]	.[illegible]	.[illegible]	.[illegible]	.[illegible]	.[illegible]	.[illegible]	.[illegible]	.[illegible]
96	.[illegible]	.[illegible]	.[illegible]	.[illegible]	.[illegible]	.[illegible]	.[illegible]	.[illegible]	.[illegible]	.[illegible]
97	.[illegible]	.[illegible]	.[illegible]	.[illegible]	.[illegible]	.[illegible]	.[illegible]	.[illegible]	.[illegible]	.[illegible]
98	.[illegible]	.[illegible]	.[illegible]	.[illegible]	.[illegible]	.[illegible]	.[illegible]	.[illegible]	.[illegible]	.[illegible]
99	.[illegible]	.[illegible]	.[illegible]	.[illegible]	.[illegible]	.[illegible]	.[illegible]	.[illegible]	.[illegible]	.[illegible]
60	.208	.206	.159	.124	.229	.177	.173	.137	.127	.163

Run No. 39 ; u component

Separation Distance (R_x)

K	6	12	18	24	36	48	60	72	84	90
00	.846	.849	.858	.860	.850	.855	.854	.842	.851	.847
01	.840	.845	.858	.861	.840	.852	.851	.855	.850	.846
02	.842	.843	.862	.864	.861	.850	.856	.856	.850	.844
03	.841	.850	.866	.860	.846	.843	.854	.854	.858	.856
04	.843	.847	.869	.855	.850	.846	.852	.855	.865	.859
05	.858	.847	.869	.865	.855	.845	.853	.854	.854	.852
06	.840	.848	.861	.855	.845	.855	.854	.853	.855	.860
07	.855	.850	.860	.866	.850	.850	.855	.850	.852	.858
08	.859	.847	.860	.861	.856	.855	.855	.859	.851	.851
09	.853	.855	.865	.855	.852	.845	.852	.851	.850	.850
10	.850	.842	.866	.854	.858	.850	.850	.856	.854	.851
11	.850	.845	.855	.858	.855	.849	.847	.850	.854	.847
12	.855	.854	.846	.855	.855	.848	.850	.858	.854	.854
13	.850	.854	.861	.850	.853	.853	.846	.851	.852	.861
14	.848	.848	.851	.857	.850	.850	.855	.855	.854	.850
15	.850	.845	.847	.857	.847	.846	.855	.854	.851	.850
16	.852	.850	.854	.858	.851	.851	.847	.852	.850	.852
17	.854	.854	.852	.857	.851	.854	.848	.854	.852	.854
18	.852	.850	.850	.857	.850	.850	.855	.852	.852	.854
19	.860	.851	.846	.857	.847	.850	.850	.850	.854	.850
20	.850	.841	.850	.857	.855	.855	.854	.855	.850	.855
21	.850	.850	.850	.852	.851	.851	.850	.850	.851	.851
22	.851	.852	.856	.855	.850	.851	.850	.850	.855	.855
23	.854	.850	.851	.858	.853	.850	.850	.850	.851	.851
24	.850	.850	.851	.855	.853	.852	.850	.850	.850	.851
25	.850	.852	.854	.851	.851	.851	.850	.851	.851	.850
26	.851	.852	.855	.856	.851	.850	.850	.850	.851	.850
27	.851	.850	.851	.850	.850	.850	.850	.850	.851	.851
28	.850	.850	.851	.855	.850	.850	.850	.850	.850	.850
29	.850	.850	.851	.850	.850	.850	.850	.850	.850	.850
30	.850	.850	.851	.850	.850	.850	.850	.850	.850	.850
31	.850	.850	.850	.850	.850	.850	.850	.850	.850	.850
32	.850	.850	.850	.850	.850	.850	.850	.850	.850	.850
33	.850	.850	.850	.850	.850	.850	.850	.850	.850	.850
34	.850	.850	.850	.850	.850	.850	.850	.850	.850	.850
35	.850	.850	.850	.850	.850	.850	.850	.850	.850	.850
36	.850	.850	.850	.850	.850	.850	.850	.850	.850	.850
37	.850	.850	.850	.850	.850	.850	.850	.850	.850	.850
38	.850	.850	.850	.850	.850	.850	.850	.850	.850	.850
39	.850	.850	.850	.850	.850	.850	.850	.850	.850	.850
40	.850	.850	.850	.850	.850	.850	.850	.850	.850	.850
41	.850	.850	.850	.850	.850	.850	.850	.850	.850	.850
42	.850	.850	.850	.850	.850	.850	.850	.850	.850	.850
43	.850	.850	.850	.850	.850	.850	.850	.850	.850	.850
44	.850	.850	.850	.850	.850	.850	.850	.850	.850	.850
45	.850	.850	.850	.850	.850	.850	.850	.850	.850	.850
46	.850	.850	.850	.850	.850	.850	.850	.850	.850	.850
47	.850	.850	.850	.850	.850	.850	.850	.850	.850	.850
48	.850	.850	.850	.850	.850	.850	.850	.850	.850	.850
49	.850	.850	.850	.850	.850	.850	.850	.850	.850	.850
50	.850	.850	.850	.850	.850	.850	.850	.850	.850	.850
51	.850	.850	.850	.850	.850	.850	.850	.850	.850	.850
52	.850	.850	.850	.850	.850	.850	.850	.850	.850	.850
53	.850	.850	.850	.850	.850	.850	.850	.850	.850	.850
54	.850	.850	.850	.850	.850	.850	.850	.850	.850	.850
55	.850	.850	.850	.850	.850	.850	.850	.850	.850	.850
56	.850	.850	.850	.850	.850	.850	.850	.850	.850	.850
57	.850	.850	.850	.850	.850	.850	.850	.850	.850	.850
58	.850	.850	.850	.850	.850	.850	.850	.850	.850	.850
59	.850	.850	.850	.850	.850	.850	.850	.850	.850	.850
60	.850	.850	.850	.850	.850	.850	.850	.850	.850	.850

Run No. 39 : v component

Separation Distance (r_s)

K	6	12	18	24	36	48	60	72	84	90
00	.817	.861	.830	.805	.787	.759	.737	.724	.749	.751
01	.805	.854	.824	.815	.789	.767	.727	.730	.756	.760
02	.795	.860	.821	.824	.806	.760	.720	.736	.758	.764
03	.800	.856	.821	.815	.794	.758	.731	.728	.765	.764
04	.804	.857	.830	.826	.788	.771	.736	.735	.753	.765
05	.795	.859	.828	.825	.784	.779	.750	.736	.751	.751
06	.795	.848	.829	.826	.787	.776	.740	.738	.756	.757
07	.798	.858	.815	.823	.794	.780	.735	.727	.758	.759
08	.795	.815	.816	.819	.806	.770	.740	.739	.755	.755
09	.797	.859	.819	.814	.785	.764	.739	.734	.766	.756
10	.795	.851	.821	.815	.787	.767	.733	.740	.750	.754
11	.795	.844	.830	.808	.800	.771	.738	.732	.765	.761
12	.793	.853	.835	.816	.748	.757	.744	.719	.760	.759
13	.784	.847	.815	.820	.791	.767	.743	.738	.755	.761
14	.786	.855	.827	.812	.786	.763	.740	.738	.765	.755
15	.794	.843	.821	.816	.779	.769	.736	.736	.757	.754
16	.789	.847	.830	.801	.780	.764	.748	.731	.759	.764
17	.786	.853	.827	.815	.788	.751	.739	.734	.771	.764
18	.790	.850	.817	.819	.779	.751	.749	.739	.754	.759
19	.789	.845	.818	.824	.775	.760	.748	.745	.754	.760
20	.788	.844	.815	.819	.780	.762	.741	.738	.765	.715
21	.784	.859	.827	.801	.791	.757	.747	.740	.758	.764
22	.777	.845	.808	.790	.798	.756	.731	.745	.757	.758
23	.788	.848	.828	.827	.777	.769	.739	.739	.757	.757
24	.779	.845	.803	.798	.778	.767	.741	.737	.756	.755
25	.771	.852	.813	.786	.766	.750	.731	.739	.765	.768
26	.789	.849	.808	.789	.770	.768	.741	.746	.759	.761
27	.775	.846	.808	.795	.770	.767	.737	.739	.755	.758
28	.776	.851	.800	.805	.768	.765	.735	.739	.756	.760
29	.771	.853	.805	.816	.769	.766	.730	.736	.760	.751
30	.778	.859	.808	.808	.773	.769	.736	.736	.751	.757
31	.770	.854	.808	.808	.767	.762	.735	.746	.758	.764
32	.771	.856	.809	.808	.771	.770	.738	.738	.760	.758
33	.778	.856	.817	.789	.775	.768	.738	.740	.764	.765
34	.778	.850	.818	.818	.767	.768	.737	.730	.759	.758
35	.779	.853	.806	.788	.773	.769	.736	.736	.756	.764
36	.778	.854	.810	.798	.766	.756	.740	.736	.757	.758
37	.770	.858	.819	.785	.769	.768	.738	.737	.760	.760
38	.779	.854	.815	.798	.764	.755	.737	.738	.760	.758
39	.776	.857	.809	.787	.767	.760	.734	.731	.759	.765
40	.789	.859	.815	.789	.760	.761	.735	.729	.765	.754
41	.787	.853	.800	.787	.761	.750	.731	.730	.764	.761
42	.780	.816	.808	.786	.767	.754	.735	.744	.753	.754
43	.761	.858	.790	.790	.763	.750	.738	.737	.758	.760
44	.765	.850	.809	.795	.768	.757	.737	.737	.751	.757
45	.757	.855	.811	.777	.765	.748	.736	.730	.759	.750
46	.755	.814	.801	.776	.759	.760	.646	.769	.765	.731
47	.765	.818	.799	.788	.757	.751	.705	.767	.756	.738
48	.771	.821	.796	.777	.758	.757	.669	.751	.753	.738
49	.757	.816	.794	.777	.756	.759	.701	.767	.765	.784
50	.761	.809	.795	.776	.756	.765	.642	.760	.758	.759
51	.769	.808	.795	.775	.749	.768	.668	.768	.754	.750
52	.767	.805	.796	.764	.766	.767	.700	.764	.711	.719
53	.754	.809	.801	.770	.759	.768	.693	.757	.711	.716
54	.750	.805	.808	.771	.765	.750	.687	.750	.718	.787
55	.758	.808	.801	.777	.767	.762	.697	.761	.723	.716
56	.764	.799	.790	.765	.751	.768	.694	.743	.750	.758
57	.755	.796	.801	.767	.768	.755	.694	.769	.714	.788
58	.761	.799	.789	.775	.754	.721	.690	.755	.780	.716
59	.757	.791	.796	.771	.780	.717	.676	.749	.708	.714
60	.761	.789	.790	.775	.758	.725	.664	.745	.715	.719

Run No. 45 ; u component

Separation Distance (m.)

K	0	12	18	24	36	42	48	72	84	90
00	.815	.675	.619	.607	.554	.552	.416	.360	.301	.365
01	.867	.752	.657	.620	.510	.546	.451	.378	.314	.381
02	.798	.705	.739	.656	.510	.570	.452	.324	.397	.398
03	.758	.711	.759	.706	.612	.599	.476	.400	.409	.409
04	.693	.716	.781	.717	.645	.610	.495	.411	.448	.458
05	.699	.671	.660	.709	.675	.682	.505	.445	.445	.451
06	.837	.687	.645	.660	.607	.640	.516	.451	.457	.467
07	.906	.600	.620	.645	.695	.646	.544	.466	.470	.489
08	.904	.975	.907	.605	.678	.659	.582	.486	.485	.501
09	.941	.950	.941	.941	.848	.744	.599	.506	.500	.506
10	.946	.911	.951	.926	.807	.760	.564	.484	.519	.543
11	.877	.696	.919	.960	.971	.801	.551	.535	.558	.555
12	.841	.675	.645	.624	.556	.576	.516	.556	.562	.557
13	.849	.650	.608	.642	.571	.541	.489	.559	.561	.557
14	.838	.620	.646	.645	.645	.611	.490	.514	.566	.557
15	.579	.608	.644	.644	.695	.694	.697	.510	.566	.558
16	.598	.546	.659	.645	.644	.672	.594	.644	.558	.555
17	.549	.576	.567	.590	.620	.624	.590	.476	.581	.562
18	.518	.590	.564	.579	.611	.644	.579	.446	.601	.589
19	.850	.531	.555	.550	.595	.621	.555	.468	.599	.595
20	.801	.561	.566	.566	.577	.617	.594	.577	.579	.568
21	.845	.595	.596	.601	.597	.581	.594	.569	.640	.650
22	.845	.555	.585	.595	.569	.595	.550	.566	.612	.604
23	.840	.591	.587	.579	.553	.566	.554	.580	.566	.594
24	.868	.557	.566	.596	.519	.565	.559	.59	.575	.611
25	.865	.586	.517	.601	.597	.586	.510	.566	.562	.599
26	.859	.511	.507	.578	.599	.594	.599	.582	.546	.589
27	.857	.595	.601	.579	.576	.568	.566	.507	.555	.564
28	.850	.580	.601	.579	.570	.564	.559	.580	.519	.570
29	.883	.501	.601	.578	.863	.857	.599	.863	.596	.565
30	.816	.858	.868	.842	.869	.855	.599	.855	.872	.588
31	.800	.879	.889	.865	.845	.866	.579	.897	.879	.568
32	.809	.857	.894	.874	.851	.868	.569	.868	.875	.509
33	.881	.869	.851	.858	.855	.850	.560	.887	.869	.865
34	.880	.855	.851	.858	.847	.868	.559	.870	.851	.858
35	.816	.887	.864	.882	.845	.817	.560	.888	.856	.879
36	.865	.884	.869	.858	.849	.858	.557	.866	.819	.867
37	.845	.819	.887	.850	.860	.860	.589	.850	.868	.867
38	.850	.867	.820	.879	.868	.863	.509	.870	.809	.861
39	.829	.867	.876	.850	.857	.868	.781,-1	.856	.867	.866
40	.884	.881	.856	.859	.881	.858	.666,-1	.856	.856	.859
41	.881	.878	.878	.868	.801	.861	.669,-1	.851	.887	.885
42	.887	.877	.876	.859	.887	.805	.596,-1	.869	.897	.858
43	.837	.888	.879	.860	.879	.874	.840,-1	.850	.868	.856
44	.819	.870	.876	.868	.869	.877	.589,-1	.837	.867	.869
45	.880	.860	.869	.859	.856	.869	.579,-1	.966,-1	.857	.860
46	.836	.858	.859	.860	.861	.867	.569,-1	.877,-1	.869	.895
47	.908,-1	.847	.861	.859	.870	.866	.679,-1	.845,-1	.867	.868
48	.868,-1	.860	.851	.887	.860	.869	.778,-1	.858,-1	.827	.869
49	.758,-1	.850	.860	.836	.869	.869	.881,-1	.916,-1	.809	.895
50	.769,-1	.844	.859	.831	.864	.879	.816,-1	.809	.835	.867
51	.788,-1	.850	.847	.839	.860	.879	.866,-1	.809	.838	.855
52	.859,-1	.829	.855	.831	.859	.859	.760,-1	.884	.836	.851
53	.710,-1	.821	.828	.801	.851	.869	.717,-1	.855	.819	.860
54	.814,-1	.805	.801	.946,-1	.885	.868	.554,-1	.858	.885	.860
55	.547,-1	.946,-1	.835	.805	.821	.845	.510,-1	.827	.827	.858
56	.595,-1	.816,-1	.892,-1	.832	.820	.829	.497,-1	.806	.884	.859
57	.655,-1	.650,-1	.882,-1	.804	.821	.825	.827,-1	.879,-1	.835	.858
58	.565,-1	.550,-1	.755,-1	.945,-1	.851	.850	.809,-1	.809,-1	.801	.858
59	.548,-1	.558,-1	.602,-1	.808,-1	.826	.858	.567,-1	.788,-1	.952,-1	.826
60	.556,-1	.560,-1	.537,-1	.829,-1	.835	.852	.551,-1	.718,-1	.917,-1	.821

Run No. 45 ; v component

	Separation distance (x_s)									
y_s	6	18	30	42	54	66	78	90	102	114
00	.698	.814	.794	.766	.728	.690	.714	.638	.687	.598
01	.906	.846	.824	.791	.783	.709	.787	.657	.633	.613
02	.896	.877	.857	.817	.769	.731	.735	.645	.645	.687
03	.883	.871	.868	.841	.775	.760	.741	.658	.658	.634
04	.888	.930	.884	.860	.791	.780	.791	.879	.661	.634
05	.749	.795	.819	.840	.885	.844	.773	.686	.658	.656
06	.718	.739	.771	.819	.858	.817	.788	.695	.660	.666
07	.689	.709	.748	.798	.[illegible]	.815	.808	.708	.651	.670
08	.657	.703	.717	.780	.808	.809	.805	.783	.677	.685
09	.641	.616	.689	.795	.779	.800	.808	.788	.668	.691
10	.688	.646	.649	.784	.767	.779	.706	.737	.707	.706
11	.647	.635	.647	.697	.789	.744	.760	.767	.785	.718
12	.598	.608	.683	.666	.710	.788	.755	.759	.726	.781
13	.587	.589	.609	.651	.679	.699	.788	.751	.736	.719
14	.576	.579	.595	.637	.675	.685	.717	.751	.759	.758
15	.588	.588	.581	.618	.656	.668	.668	.765	.734	.784
16	.551	.564	.574	.599	.660	.676	.678	.758	.751	.758
17	.546	.563	.573	.606	.651	.648	.698	.783	.731	.731
18	.548	.556	.567	.589	.615	.651	.656	.709	.788	.789
19	.559	.559	.551	.554	.598	.688	.618	.674	.719	.716
20	.586	.566	.557	.551	.630	.611	.599	.656	.708	.704
21	.510	.561	.546	.546	.578	.660	.588	.668	.685	.659
22	.508	.588	.546	.555	.568	.590	.579	.641	.661	.677
23	.495	.509	.519	.580	.567	.577	.558	.598	.648	.655
24	.470	.488	.508	.578	.598	.568	.560	.595	.618	.659
25	.471	.546	.585	.590	.599	.597	.588	.587	.566	.616
26	.489	.470	.489	.587	.544	.591	.587	.594	.591	.586
27	.460	.458	.568	.670	.586	.551	.514	.590	.577	.580
28	.448	.450	.469	.475	.580	.589	.508	.517	.556	.569
29	.448	.456	.458	.485	.597	.510	.509	.518	.551	.555
30	.448	.460	.449	.450	.478	.491	.468	.505	.559	.565
31	.416	.411	.437	.485	.476	.491	.489	.588	.587	.551
32	.408	.408	.481	.485	.467	.488	.471	.479	.518	.581
33	.388	.388	.458	.508	.439	.477	.496	.488	.519	.586
34	.379	.395	.[illegible]	.507	.461	.467	.458	.476	.508	.516
35	.369	.378	.396	.380	.485	.449	.481	.478	.496	.508
36	.369	.366	.384	.377	.416	.433	.416	.465	.486	.500
37	.360	.361	.360	.368	.408	.486	.409	.459	.486	.486
38	.361	.358	.360	.360	.391	.416	.388	.419	.473	.485
39	.358	.368	.360	.354	.385	.395	.375	.402	.498	.470
40	.360	.[illegible]	.388	.399	.360	.381	.379	.391	.443	.451
41	.367	.358	.357	.355	.364	.368	.377	.391	.461	.450
42	.378	.358	.357	.379	.368	.359	.377	.361	.409	.485
43	.364	.369	.359	.360	.364	.364	.377	.359	.396	.408
44	.357	.360	.356	.358	.365	.369	.391	.367	.385	.396
45	.355	.348	.379	.365	.365	.364	.377	.358	.379	.381
46	.355	.349	.366	.357	.368	.365	.374	.364	.371	.379
47	.348	.349	.348	.350	.360	.358	.381	.364	.370	.378
48	.361	.351	.347	.361	.360	.365	.375	.396	.368	.370
49	.358	.355	.361	.356	.360	.359	.365	.358	.355	.358
50	.355	.354	.356	.351	.353	.353	.353	.357	.367	.364
51	.357	.356	.358	.358	.363	.363	.354	.355	.363	.365
52	.359	.357	.355	.358	.356	.361	.368	.355	.350	.361
53	.360	.360	.364	.361	.350	.354	.367	.358	.369	.368
54	.361	.346	.357	.359	.355	.355	.359	.350	.368	.359
55	.367	.356	.363	.324	.359	.328	.354	.355	.369	.355
56	.351	.361	.361	.383	.388	.389	.368	.355	.369	.357
57	.367	.363	.368	.324	.358	.365	.356	.355	.353	.365
58	.365	.365	.351	.325	.357	.364	.357	.351	.367	.360
59	.357	.368	.365	.351	.363	.356	.354	.350	.364	.368
60	.346	.376	.364	.354	.355	.358	.385	.319	.368	.359

Run no. 45 : u component

	Separation Distance (n_s)								
N_s	1	4	5	16	20	21	64	80	84	85
00	.855				.471	.356	.999,-1		.495,-1	.195,-1
01	.671				.403	.381	.965,-1		.363,-1	.490,-2
02	.554				.479	.585	.107		.349,-1	.240,-2
03	.484				.447	.551	.924,-1		.301,-1	.224,-1
04	.446				.479	.544	.961,-1		.275,-1	-.128,-2
05	.391				.545	.327	.749,-1		.352,-1	-.856,-2
06	.356				.561	.309	.791,-1		.441,-1	-.372,-2
07	.314				.563	.312	.987,-1		.368,-1	-.107,-1
08	.289				.539	.295	.963,-1		.301,-1	.508,-2
09	.253				.515	.298	.951,-1		.247,-1	.217,-1
10	.234				.470	.262	.927,-1		.215,-1	.519,-1
11	.219				.444	.242	.915,-1		.220,-1	.456,-1
12	.197				.421	.241	.901,-1		.244,-1	.309,-2
13	.174				.398	.248	.981,-1		.257,-1	-.844,-2
14	.171				.384	.253	.103,-1		.247,-1	-.117,-1
15	.163				.390	.168	.948,-1		.858,-1	-.165,-1
16	.146				.409	.168	.964,-1		.195,-1	-.844,-2
17	.157				.417	.190	.988,-1		-.704,-2	-.925,-2
18	.150				.392	.181	.956,-1		.761,-2	-.211,-2
19	.145				.373	.166	.941,-1		.799,-2	.106,-1
20	.151				.181	.175	.959,-1		-.862,-4	-.154,-1
21	.138				.180	.177	.988,-2		-.000	-.375,-2
22	.138				.155	.166	.214,-1		.120,-1	.375,-2
23	.121				.156	.192	.228,-1		.304,-1	.860,-2
24	.100				.139	.118	.975,-1		.916,-1	-.126,-1
25	.111				.126	.910,-1	.759,-1		.600,-1	-.166,-1
26	.119				.142	.107	.774,-1		.430,-1	-.788,-2
27	.137				.164	.116	.919,-1		.340,-1	-.609,-2
28	.140				.164	.113	.104		.248,-1	.109,-1
29	.151				.155	.119	.157		.196,-1	.367,-1
30	.134				.141	.126	.141		.753,-1	.299,-1
31	.107				.159	.112	.159		.805,-1	.648,-1
32	.109				.142	.129	.178		.761,-1	.450,-1
33	.[illegible],-1				.137	.132	.190		.681,-1	.576,-1
34	.[illegible],-1				.144	.113	.175		.857,-1	.601,-1
35	.[illegible],-1				.127	.[illegible],-1	.167		.[illegible],-1	.729,-1
36	.719,-1				.125	.754,-1	.160		.[illegible],-1	.[illegible],-1
37	.[illegible],-1				.126	.[illegible],-1	.129		.859,-1	.869,-1
38	.[illegible],-1				.129	.778,-1	.128		.[illegible],-1	.737,-1
39	.[illegible],-1				.134	.[illegible],-1	.145		.716,-1	.717,-1
40	.[illegible],-1				.111	.[illegible],-1	.[illegible]		.[illegible],-1	.[illegible],-1
41	.731,-1				.115	.[illegible],-1	.130		.[illegible],-1	.911,-1
42	.[illegible],-1				.108	.[illegible],-1	.113		.129	.107
43	.[illegible],-1				.110	.[illegible],-1	.142		.151	.957,-1
44	.868,-1				.121	.[illegible],-1	.158		.127	.955,-1
45	.[illegible],-1				.119	.[illegible],-1	.161		.142	.103
46	.[illegible],-1				.104	.[illegible],-1	.157		.130	.[illegible],-1
47	.[illegible],-1				.[illegible],-1	.[illegible],-1	.191		.108	.[illegible],-1
48	.515,-1				.[illegible],-1	.[illegible],-1	.108		.[illegible],-1	.[illegible],-1
49	.[illegible],-1				.[illegible],-1	.[illegible],-1	.[illegible]		.[illegible],-1	.[illegible],-1
50	.[illegible],-1				.[illegible],-1	.[illegible],-1	.[illegible]		.[illegible],-1	.[illegible],-1
51	.[illegible],-1				.[illegible],-1	.[illegible],-1	.210		.[illegible],-1	.[illegible],-1
52	.[illegible],-1				.[illegible],-1	.[illegible],-1	.197		.[illegible],-1	.[illegible],-1
53	.668,-1				.117	.[illegible],-1	.185		.[illegible],-1	.[illegible],-1
54	.[illegible],-1				.117	.[illegible],-1	.179		.108	.981,-1
55	.111				.115	.851,-1	.172		.122	.106
56	.120				.106	.[illegible],-1	.164		.136	.131
57	.[illegible],-1				.[illegible],-1	.[illegible],-1	.160		.130	.133
58	.[illegible],-1				.862,-1	.[illegible],-1	.161		.130	.[illegible]
59	.[illegible],-1				.685,-1	.[illegible],-1	.155		.155	.157
60	.572,-1				.422,-1	.413,-1	.139		.140	.156

Run No. 45 ; v component

Separation Distance (x_s)

K	1	4	7	16	20	21	04	00	04	05
00	.795				.575	.507	.507		.551	.547
01	.700				.503	.575	.505		.565	.542
02	.666				.504	.569	.505		.545	.550
03	.634				.505	.504	.547		.531	.530
04	.614				.579	.570	.541		.511	.523
05	.615				.571	.545	.545		.505	.505
06	.594				.544	.541	.525		.517	.511
07	.588				.549	.543	.532		.515	.527
08	.574				.537	.526	.545		.524	.542
09	.571				.515	.520	.550		.544	.542
10	.544				.543	.514	.535		.550	.527
11	.540				.527	.510	.524		.550	.529
12	.545				.507	.545	.534		.558	.531
13	.517				.527	.500	.555		.540	.527
14	.508				.541	.547	.554		.560	.534
15	.498				.491	.521	.550		.505	.540
16	.490				.507	.489	.510		.529	.523
17	.500				.475	.497	.517		.546	.526
18	.466				.490	.495	.519		.507	.524
19	.461				.495	.501	.547		.545	.514
10	.448				.449	.455	.531		.527	.500
11	.454				.439	.459	.504		.527	.500
12	.452				.482	.511	.520		.520	.507
13	.430				.411	.460	.477		.505	.481
14	.489				.465	.461	.519		.495	.499
15	.418				.544	.491	.533		.550	.487
16	.419				.465	.504	.540		.551	.485
17	.409				.381	.540	.537		.556	.477
18	.411				.508	.540	.547		.541	.495
19	.401				.505	.524	.551		.534	.489
30	.408				.533	.508	.534		.471	.523
31	.451				.540	.519	.535		.541	.507
32	.450				.545	.546	.546		.477	.504
33	.486				.571	.520	.520		.497	.519
34	.486				.574	.522	.529		.503	.493
35	.405				.544	.534	.512		.565	.1076
36	.408				.544	.552	.520		.543	.1065
37	.455				.523	.550	.1[illegible]		.503	.1072
38	.387				.510	.544	.1[illegible]		.535	.1068
39	.379				.544	.552	.1[illegible]		.531	.1044
40	.376				.501	.534	.1[illegible]		.[illegible]	.1041
41	.379				.506	.535	.1[illegible]		.[illegible]	.1056
42	.395				.510	.551	.1[illegible]		.1[illegible]	.1027
43	.377				.515	.535	.1[illegible]		.1010	.1027
44	.379				.502	.534	.1[illegible]		.1006	.1050
45	.384				.517	.551	.1[illegible]		.1046	.1045
46	.385				.509	.554	.1[illegible]		.1031	.1038
47	.395				.507	.544	.1[illegible]		.1055	.1043
48	.399				.515	.523	.1[illegible]		.1038	.1055
49	.398				.505	.540	.1[illegible]		.1071	.1055
50	.395				.519	.527	.1[illegible]		.1052	.1055
51	.397				.517	.530	.1[illegible]		.1048	.1055
52	.380				.505	.520	.1[illegible]		.1047	.1058
53	.397				.511	.530	.1[illegible]		.1028	.1055
54	.398				.515	.525	.1[illegible]		.1000	.1057
55	.398				.509	.525	.1[illegible]		.1048	.1064
56	.397				.511	.530	.1[illegible]		.1045	.1058
57	.399				.510	.530	.1[illegible]		.1041	.1064
58	.398				.506	.544	.1[illegible]		.1040	.1035
59	.398				.507	.520	.1[illegible]		.1026	.1064
60	.508				.508	.512	.1[illegible]		.1026	.1019

Run No. 46 ; N component

Separation Distance (n.)

K	6	12	18	24	36	42	48	72	84	90
00	.396	.310	.251	.804	.805	.196	.895	.149	.159	.805
01	.389	.301	.251	.188	.916	.804	.867	.164	.159	.881
02	.409	.315	.254	.161	.915	.814	.850	.182	.151	.814
03	.397	.309	.244	.159	.813	.882	.844	.169	.159	.195
04	.370	.294	.255	.157	.919	.859	.854	.168	.198	.169
05	.348	.288	.250	.146	.887	.818	.855	.165	.146	.159
06	.330	.277	.245	.167	.855	.196	.859	.157	.155	.155
07	.350	.286	.220	.176	.899	.818	.955	.160	.175	.170
08	.355	.294	.215	.185	.965	.288	.887	.184	.178	.185
09	.357	.297	.244	.190	.902	.947	.933	.175	.179	.190
10	.390	.307	.288	.185	.885	.861	.224	.198	.176	.197
11	.379	.294	.238	.170	.898	.877	.818	.187	.191	.192
12	.356	.269	.211	.175	.804	.900	.816	.196	.[illegible]	.191
13	.388	.256	.201	.185	.861	.892	.811	.187	.199	.175
14	.389	.260	.[illegible]	.168	.881	.507	.189	.168	.908	.187
15	.819	.857	.181	.190	.871	.816	.189	.150	.800	.115
16	.811	.856	.177	.[illegible]	.[illegible]	.878	.800	.156	.178	.114
17	.148	.859	.[illegible]	.212	.847	.860	.817	.118	.143	.181
18	.139	.[illegible]	.[illegible]	.[illegible]	.[illegible]	.[illegible]	.[illegible]	.107	.156	.118
19	.108	.800	.177	.091	.856	.855	.856	.111	.158	.108
20	.189	.817	.176	.[illegible]	.995	.827	.849	.188	.187	.666,-1
21	.114	.896	.157	.891	.811	.858	.846	.148	.185	.850,-1
22	.115	.815	.178	.834	.810	.851	.857	.165	.150	.537,-1
23	.183	.801	.147	.[illegible]	.815	.855	.849	.178	.159	.689,-1
24	.155	.122	.189	.[illegible]	.145	.815	.858	.191	.144	.786,-1
25	.181	.186	.[illegible]	.[illegible]	.125	.800	.858	.147	.153	-.668,-1
26	.959,-1	.181	.170	.[illegible]	.157	.150	.275	.176	.161	.684,-1
27	.[illegible],-1	.184	.149	.[illegible]	.156	.[illegible]	.[illegible]	.176	.180	.763,-1
28	.934,-1	.180	.146	.[illegible]	.195	.149	.[illegible]	.[illegible]	.191	.689,-1
29	.969,-1	.168	.151	.191	.[illegible]	.158	.875	.150	.811	.707,-1
30	.[illegible],-1	.189	.156	.[illegible]	.151	.150	.[illegible]	.185	.[illegible]	.891,-1
31	.[illegible],-1	.[illegible],-1	.158	.[illegible]	.144	.155	.895	.[illegible]	.[illegible]	.[illegible]
32	.[illegible]	.[illegible],-1	.[illegible]	.[illegible]	.[illegible]	.[illegible]	.[illegible]	.[illegible]	.[illegible]	.944,-1
33	.[illegible]	.[illegible],-1	.[illegible]	.[illegible]	.[illegible]	.[illegible]	.[illegible]	.[illegible]	.[illegible]	.[illegible],-1
34	.[illegible],-1	.[illegible]	.[illegible]	.[illegible]	.[illegible]	.[illegible]	.[illegible]	.[illegible]	.[illegible]	.[illegible]
35	.[illegible],-1	.[illegible]	.[illegible]	.[illegible]	.[illegible]	.[illegible]	.[illegible]	.[illegible]	.[illegible]	.[illegible]
36	.[illegible],-1	.[illegible]	.[illegible]	.[illegible]	.[illegible]	.[illegible]	.[illegible]	.[illegible]	.[illegible]	.[illegible]
37	.[illegible],-1	.[illegible]	.[illegible]	.[illegible]	.[illegible]	.[illegible]	.[illegible]	.[illegible]	.[illegible]	.[illegible]
38	.[illegible],-1	.[illegible]	.[illegible]	.[illegible]	.[illegible]	.[illegible]	.[illegible]	.[illegible]	.[illegible]	.[illegible]
39	.[illegible],-1	.[illegible]	.[illegible]	.[illegible]	.[illegible]	.[illegible]	.[illegible]	.[illegible]	.[illegible]	.[illegible]
40	.[illegible],-1	.[illegible]	.[illegible]	.[illegible]	.[illegible]	.[illegible]	.[illegible]	.[illegible]	.[illegible]	.[illegible]
41	.[illegible],-1	.[illegible]	.[illegible]	.[illegible]	.[illegible]	.[illegible]	.[illegible]	.[illegible]	.[illegible]	.[illegible]
42	.[illegible],-1	.[illegible]	.[illegible]	.[illegible]	.[illegible]	.[illegible]	.[illegible]	.[illegible]	.[illegible]	.[illegible]
43	.[illegible],-1	.[illegible]	.[illegible]	.[illegible]	.[illegible]	.[illegible]	.[illegible]	.[illegible]	.[illegible]	.[illegible]
44	.[illegible]	.[illegible]	.[illegible]	.[illegible]	.[illegible]	.[illegible]	.[illegible]	.[illegible]	.[illegible]	.[illegible]
45	.[illegible]	.[illegible]	.[illegible]	.[illegible]	.[illegible]	.[illegible]	.[illegible]	.[illegible]	.[illegible]	.[illegible]
46	.[illegible]	.[illegible]	.[illegible]	.[illegible]	.[illegible]	.[illegible]	.[illegible]	.[illegible]	.[illegible]	.[illegible]
47	.[illegible]	.[illegible]	.[illegible]	.[illegible]	.[illegible]	.[illegible]	.[illegible]	.[illegible]	.[illegible]	.[illegible]
48	.[illegible]	.[illegible]	.[illegible]	.[illegible]	.[illegible]	.[illegible]	.[illegible]	.[illegible]	.[illegible]	.[illegible]
49	.[illegible]	.[illegible]	.[illegible]	.[illegible]	.[illegible]	.[illegible]	.[illegible]	.[illegible]	.[illegible]	.[illegible]
50	.[illegible]	.[illegible]	.[illegible]	.[illegible]	.[illegible]	.[illegible]	.[illegible]	.[illegible]	.[illegible]	.[illegible]
51	.[illegible]	.[illegible]	.[illegible]	.[illegible]	.[illegible]	.[illegible]	.[illegible]	.[illegible]	.[illegible]	.[illegible]
52	.[illegible]	.[illegible]	.[illegible]	.[illegible]	.[illegible]	.[illegible]	.[illegible]	.[illegible]	.[illegible]	.[illegible]
53	.[illegible]	.[illegible]	.[illegible]	.[illegible]	.[illegible]	.[illegible]	.[illegible]	.[illegible]	.[illegible]	.[illegible]
54	.[illegible]	.[illegible]	.[illegible]	.[illegible]	.[illegible]	.[illegible]	.[illegible]	.[illegible]	.[illegible]	.[illegible]
55	.[illegible]	.[illegible]	.[illegible]	.[illegible]	.[illegible]	.[illegible]	.[illegible]	.[illegible]	.[illegible]	.[illegible]
56	.[illegible]	.[illegible]	.[illegible]	.[illegible]	.[illegible]	.[illegible]	.[illegible]	.[illegible]	.[illegible]	.[illegible]
57	.[illegible]	.[illegible]	.[illegible]	.[illegible]	.[illegible]	.[illegible]	.[illegible]	.[illegible]	.[illegible]	.[illegible]
58	.[illegible]	.[illegible]	.[illegible]	.[illegible]	.[illegible]	.[illegible]	.[illegible]	.[illegible]	.[illegible]	.[illegible]
59	.[illegible]	.[illegible]	.[illegible]	.[illegible]	.[illegible]	.[illegible]	.[illegible]	.[illegible]	.[illegible]	.[illegible]
60	.[illegible]	.[illegible]	.[illegible]	.[illegible]	.[illegible]	.[illegible]	.[illegible]	.[illegible]	.[illegible]	.[illegible]

Run No. 46 ; v component

Separation Distance (m.)

X	6	12	18	24	36	48	60	72	84	90
00	.596	.519	.498	.518	.494	.508	.581	.484	.465	.498
01	.590	.546	.480	.569	.489	.488	.504	.509	.468	.511
02	.537	.551	.481	.551	.499	.509	.510	.500	.464	.509
03	.508	.528	.493	.531	.509	.511	.515	.484	.494	.498
04	.590	.515	.486	.516	.495	.520	.559	.515	.457	.493
05	.495	.488	.491	.517	.498	.504	.486	.495	.481	.476
06	.469	.500	.471	.520	.506	.490	.481	.489	.456	.480
07	.495	.501	.502	.501	.475	.511	.490	.515	.468	.467
08	.470	.495	.489	.510	.495	.504	.486	.496	.447	.495
09	.473	.498	.476	.509	.474	.498	.516	.504	.470	.479
10	.498	.497	.497	.516	.499	.476	.516	.491	.485	.491
11	.468	.490	.481	.485	.486	.490	.516	.481	.490	.496
12	.496	.500	.478	.505	.496	.508	.540	.498	.498	.519
13	.484	.476	.497	.511	.498	.511	.516	.490	.477	.508
14	.460	.478	.496	.504	.478	.485	.509	.491	.491	.507
15	.498	.491	.512	.495	.476	.498	.509	.498	.488	.512
16	.487	.498	.491	.514	.498	.515	.516	.504	.504	.519
17	.491	.475	.497	.496	.496	.512	.508	.486	.498	.495
18	.485	.477	.497	.487	.511	.501	.514	[illegible]	.494	.501
19	.488	.480	.487	.504	[illegible]	[illegible]	[illegible]	.512	.477	.494
20	.498	.491	.498	.507	.504	.498	.487	.491	.494	.478
21	.495	.495	.491	.505	.511	.501	.487	.500	.491	.487
22	.495	.497	.479	.485	.498	.501	.490	.498	.511	.509
23	.471	.498	.495	.488	.511	.498	.489	.516	.495	.508
24	.498	.491	.489	.508	.508	.497	.504	.508	.498	.495
25	.484	.478	.500	.498	.508	.508	.508	.485	.494	.479
26	.489	.507	.504	.509	.488	.498	.506	.498	.485	.488
27	.478	.514	.511	.511	.478	.497	.514	.498	.501	.484
28	.488	.497	.501	.489	.490	.511	.514	.498	.489	.484
29	.478	.499	.507	.516	.487	.514	.511	.485	.498	.491
30	.491	.477	.507	.514	.508	.514	.515	.498	.494	.494
31	.494	.478	.508	.513	.477	.511	.504	.509	.484	.481
32	.477	.478	.504	.504	.498	.511	.477	.478	.491	.471
33	.494	.478	.497	.501	.514	.506	.495	.475	.490	.478
34	.488	.489	.501	.515	.508	.504	[illegible]	.489	.490	.475
35	.488	.498	.500	.498	.478	.497	.498	.478	.487	.481
36	.481	.487	.497	.494	.478	.504	.497	.477	.495	.478
37	.491	.488	.487	.489	.478	.497	.494	.490	.487	.504
38	.490	.488	.493	.500	.457	.495	.478	.487	.471	.494
39	.485	.487	.497	.516	.485	.495	.488	.480	.485	.480
40	.478	.498	.494	.504	.485	.495	.494	.478	.498	.504
41	.487	.457	.480	.518	.491	.516	.498	.489	.511	.510
42	.457	.491	.494	.514	.470	.510	.478	.491	.480	.491
43	.489	.487	.497	.518	.498	.504	.498	.489	.495	.470
44	.491	.480	.488	.508	.490	.498	.497	.480	.491	.486
45	.490	.480	.475	.500	.4[illegible]	.487	.490	.475	.491	.486
46	.494	.490	.475	.511	.478	.495	.498	.475	.484	.494
47	.496	.486	.485	.504	.487	.480	.498	.478	.498	.480
48	.497	.497	.485	.500	.495	.479	.475	.486	.481	.498
49	.496	.471	.478	.486	.497	.475	.545	.500	.487	.474
50	.495	.494	.484	.478	.488	.478	.479	.490	.487	.477
51	.486	.471	.487	.498	.490	.499	.475	.517	.484	.486
52	.476	.490	.475	.488	.495	.498	.501	.504	.479	.495
53	.479	.485	.499	.475	.487	.485	.475	.508	.486	.486
54	.492	.487	.486	.496	.484	.478	.518	.516	.477	.479
55	.496	.470	.478	.494	.498	.497	.515	.480	.470	.476
56	.469	.497	.487	.510	.496	.498	.507	.475	.487	.495
57	.471	.485	.471	.514	.490	.475	.499	.489	.476	.476
58	.491	.475	.478	.501	.497	.487	.494	.498	.485	.480
59	.497	.495	.495	.501	.495	.499	.492	.508	.498	.486
60	.473	.497	.485	.517	.483	.484	.484	.497	.488	.491

Run No. 53 ; u component

Separation distance (m.)

K	1	4	5	16	20	21	64	80	84	85
00	.[illegible]	.287	.256	.254	.[illegible]	.240	.320	.[illegible]	.256	.316
01	.506	.506	.[illegible]	.515	.246	.[illegible]	.518	.542	.216	.517
02	.[illegible]	.508	.[illegible]	.[illegible]	.[illegible]	.[illegible]	.534	.534	.245	.507
03	.529	.534	.541	.500	.240	.270	.508	.511	.[illegible]	.506
04	.540	.558	.547	.508	.[illegible]	.246	.509	.512	.[illegible]	.[illegible]
05	.[illegible]	.[illegible]	.[illegible]	.[illegible]	.[illegible]	.[illegible]	.[illegible]	.[illegible]	.[illegible]	.[illegible]
06	.[illegible]	.[illegible]	.[illegible]	.[illegible]	.[illegible]	.[illegible]	.[illegible]	.[illegible]	.[illegible]	.[illegible]
07	.[illegible]	.[illegible]	.[illegible]	.[illegible]	.[illegible]	.[illegible]	.[illegible]	.[illegible]	.[illegible]	.[illegible]
08	.[illegible]	.[illegible]	.[illegible]	.[illegible]	.[illegible]	.[illegible]	.[illegible]	.[illegible]	.[illegible]	.[illegible]
09	.[illegible]	.[illegible]	.[illegible]	.[illegible]	.[illegible]	.[illegible]	.[illegible]	.[illegible]	.[illegible]	.[illegible]
10	.[illegible]	.[illegible]	.[illegible]	.[illegible]	.[illegible]	.[illegible]	.[illegible]	.[illegible]	.[illegible]	.[illegible]
11	.[illegible]	.[illegible]	.[illegible]	.[illegible]	.[illegible]	.[illegible]	.[illegible]	.[illegible]	.[illegible]	.[illegible]
12	.[illegible]	.[illegible]	.[illegible]	.[illegible]	.[illegible]	.[illegible]	.[illegible]	.[illegible]	.[illegible]	.[illegible]
13	.[illegible]	.[illegible]	.[illegible]	.[illegible]	.[illegible]	.[illegible]	.[illegible]	.[illegible]	.[illegible]	.[illegible]
14	.[illegible]	.[illegible]	.[illegible]	.[illegible]	.[illegible]	.[illegible]	.[illegible]	.[illegible]	.[illegible]	.[illegible]
15	.[illegible]	.[illegible]	.[illegible]	.[illegible]	.[illegible]	.[illegible]	.[illegible]	.[illegible]	.[illegible]	.[illegible]
16	.[illegible]	.[illegible]	.[illegible]	.[illegible]	.[illegible]	.[illegible]	.[illegible]	.[illegible]	.[illegible]	.[illegible]
17	.[illegible]	.[illegible]	.[illegible]	.[illegible]	.[illegible]	.[illegible]	.[illegible]	.[illegible]	.[illegible]	.[illegible]
18	.[illegible]	.[illegible]	.[illegible]	.[illegible]	.[illegible]	.[illegible]	.[illegible]	.[illegible]	.[illegible]	.[illegible]
19	.[illegible]	.[illegible]	.[illegible]	.[illegible]	.[illegible]	.[illegible]	.[illegible]	.[illegible]	.[illegible]	.[illegible]
20	.[illegible]	.[illegible]	.[illegible]	.[illegible]	.[illegible]	.[illegible]	.[illegible]	.[illegible]	.[illegible]	.[illegible]
21	.[illegible]	.[illegible]	.[illegible]	.[illegible]	.[illegible]	.[illegible]	.[illegible]	.[illegible]	.[illegible]	.[illegible]
22	.[illegible]	.[illegible]	.[illegible]	.[illegible]	.[illegible]	.[illegible]	.[illegible]	.[illegible]	.[illegible]	.[illegible]
23	.[illegible]	.[illegible]	.[illegible]	.[illegible]	.[illegible]	.[illegible]	.[illegible]	.[illegible]	.[illegible]	.[illegible]
24	.[illegible]	.[illegible]	.[illegible]	.[illegible]	.[illegible]	.[illegible]	.[illegible]	.[illegible]	.[illegible]	.[illegible]
25	.[illegible]	.[illegible]	.[illegible]	.[illegible]	.[illegible]	.[illegible]	.[illegible]	.[illegible]	.[illegible]	.[illegible]
26	.[illegible]	.[illegible]	.[illegible]	.[illegible]	.[illegible]	.[illegible]	.[illegible]	.[illegible]	.[illegible]	.[illegible]
27	.[illegible]	.[illegible]	.[illegible]	.[illegible]	.[illegible]	.[illegible]	.[illegible]	.[illegible]	.[illegible]	.[illegible]
28	.[illegible]	.[illegible]	.[illegible]	.[illegible]	.[illegible]	.[illegible]	.[illegible]	.[illegible]	.[illegible]	.[illegible]
29	.[illegible]	.[illegible]	.[illegible]	.[illegible]	.[illegible]	.[illegible]	.[illegible]	.[illegible]	.[illegible]	.[illegible]
30	.[illegible]	.[illegible]	.[illegible]	.[illegible]	.[illegible]	.[illegible]	.[illegible]	.[illegible]	.[illegible]	.[illegible]
31	.[illegible]	.[illegible]	.[illegible]	.[illegible]	.[illegible]	.[illegible]	.[illegible]	.[illegible]	.[illegible]	.[illegible]
32	.[illegible]	.[illegible]	.[illegible]	.[illegible]	.[illegible]	.[illegible]	.[illegible]	.[illegible]	.[illegible]	.[illegible]
33	.[illegible]	.[illegible]	.[illegible]	.[illegible]	.[illegible]	.[illegible]	.[illegible]	.[illegible]	.[illegible]	.[illegible]
34	.[illegible]	.[illegible]	.[illegible]	.[illegible]	.[illegible]	.[illegible]	.[illegible]	.[illegible]	.[illegible]	.[illegible]
35	.[illegible]	.[illegible]	.[illegible]	.[illegible]	.[illegible]	.[illegible]	.[illegible]	.[illegible]	.[illegible]	.[illegible]
36	.[illegible]	.[illegible]	.[illegible]	.[illegible]	.[illegible]	.[illegible]	.[illegible]	.[illegible]	.[illegible]	.[illegible]
37	.[illegible]	.[illegible]	.[illegible]	.[illegible]	.[illegible]	.[illegible]	.[illegible]	.[illegible]	.[illegible]	.[illegible]
38	.[illegible]	.[illegible]	.[illegible]	.[illegible]	.[illegible]	.[illegible]	.[illegible]	.[illegible]	.[illegible]	.[illegible]
39	.[illegible]	.[illegible]	.[illegible]	.[illegible]	.[illegible]	.[illegible]	.[illegible]	.[illegible]	.[illegible]	.[illegible]
40	.[illegible]	.[illegible]	.[illegible]	.[illegible]	.[illegible]	.[illegible]	.[illegible]	.[illegible]	.[illegible]	.[illegible]
41	.[illegible]	.[illegible]	.[illegible]	.[illegible]	.[illegible]	.[illegible]	.[illegible]	.[illegible]	.[illegible]	.[illegible]
42	.[illegible]	.[illegible]	.[illegible]	.[illegible]	.[illegible]	.[illegible]	.[illegible]	.[illegible]	.[illegible]	.[illegible]
43	.[illegible]	.[illegible]	.[illegible]	.[illegible]	.[illegible]	.[illegible]	.[illegible]	.[illegible]	.[illegible]	.[illegible]
44	.[illegible]	.[illegible]	.[illegible]	.[illegible]	.[illegible]	.[illegible]	.[illegible]	.[illegible]	.[illegible]	.[illegible]
45	.[illegible]	.[illegible]	.[illegible]	.[illegible]	.[illegible]	.[illegible]	.[illegible]	.[illegible]	.[illegible]	.[illegible]
46	.[illegible]	.[illegible]	.[illegible]	.[illegible]	.[illegible]	.[illegible]	.[illegible]	.[illegible]	.[illegible]	.[illegible]
47	.[illegible]	.[illegible]	.[illegible]	.[illegible]	.[illegible]	.[illegible]	.[illegible]	.[illegible]	.[illegible]	.[illegible]
48	.[illegible]	.[illegible]	.[illegible]	.[illegible]	.[illegible]	.[illegible]	.[illegible]	.[illegible]	.[illegible]	.[illegible]
49	.[illegible]	.[illegible]	.[illegible]	.[illegible]	.[illegible]	.[illegible]	.[illegible]	.[illegible]	.[illegible]	.[illegible]
50	.[illegible]	.[illegible]	.[illegible]	.[illegible]	.[illegible]	.[illegible]	.[illegible]	.[illegible]	.[illegible]	.[illegible]
51	.[illegible]	.[illegible]	.[illegible]	.[illegible]	.[illegible]	.[illegible]	.[illegible]	.[illegible]	.[illegible]	.[illegible]
52	.[illegible]	.[illegible]	.[illegible]	.[illegible]	.[illegible]	.[illegible]	.[illegible]	.[illegible]	.[illegible]	.[illegible]
53	.[illegible]	.[illegible]	.[illegible]	.[illegible]	.[illegible]	.[illegible]	.[illegible]	.[illegible]	.[illegible]	.[illegible]
54	.[illegible]	.[illegible]	.[illegible]	.[illegible]	.[illegible]	.[illegible]	.[illegible]	.[illegible]	.[illegible]	.[illegible]
55	.240	.[illegible]	.[illegible]	.[illegible]	.[illegible]	.[illegible]	.[illegible]	.[illegible]	.[illegible]	.[illegible]
56	.[illegible]	.[illegible]	.[illegible]	.[illegible]	.[illegible]	.[illegible]	.[illegible]	.[illegible]	.[illegible]	.[illegible]
57	.[illegible]	.[illegible]	.[illegible]	.[illegible]	.[illegible]	.[illegible]	.[illegible]	.[illegible]	.[illegible]	.[illegible]
58	.[illegible]	.[illegible]	.[illegible]	.[illegible]	.[illegible]	.[illegible]	.[illegible]	.[illegible]	.[illegible]	.[illegible]
59	.[illegible]	.[illegible]	.[illegible]	.[illegible]	.[illegible]	.[illegible]	.[illegible]	.[illegible]	.[illegible]	.[illegible]
60	.186	.[illegible]	.[illegible]	.[illegible]	.[illegible]	.[illegible]	.[illegible]	.[illegible]	.[illegible]	.[illegible]

Run No. 55 ; v component

Separation Distance (x_s)

N	1	4	5	10	20	21	40	80	84	42
00	.608	.401	.404	.487	.395	.398	.333	.233	.271	.247
01	.475	.454	.395	.444	.390	.348	.301	.260	.270	.254
02	.480	.395	.380	.404	.401	.356	.270	.081	.268	.230
03	.339	.373	.344	.482	.439	.414	.307	.256	.264	.240
04	.354	.388	.312	.496	.497	.304	.314	.282	.287	.241
05	.398	.303	.314	.407	.419	.395	.308	.285	.330	.206
06	.390	.416	.378	.408	.401	.340	.312	.264	.277	.270
07	.334	.388	.360	.[illegible]	.334	.[illegible]	.[illegible]	.[illegible]	.[illegible]	.257
08	.388	.395	.315	.409	.345	.312	.314	.274	.281	.216
09	.385	.367	.309	.115	.375	.348	.304	.240	.249	.201
10	.386	.371	.326	.394	.341	.368	.318	.275	.241	.230
11	.399	.389	.346	.399	.395	.369	.308	.273	.308	.217
12	.309	.415	.361	.414	.357	.328	.293	.270	.246	.216
13	.309	.348	.350	.[illegible]	.357	.349	.347	.291	.245	.236
14	.334	.346	.325	.407	.370	.335	.312	.291	.249	.216
15	.318	.319	.301	.419	.311	.331	.290	.248	.264	.230
16	.347	.385	.309	.403	.369	.371	.317	.257	.298	.295
17	.380	.306	.350	.439	.375	.344	.321	.319	.278	.238
18	.397	.318	.380	.428	.[illegible]	.[illegible]	.[illegible]	.342	.270	.264
19	.310	.[illegible]	.351	.448	.350	.369	.311	.287	.266	.270
20	.378	.309	.[illegible]	.419	.[illegible]	.331	.[illegible]	.[illegible]	.[illegible]	.[illegible]
21	.[illegible]	.[illegible]	.[illegible]	.[illegible]	.[illegible]	.[illegible]	.[illegible]	.[illegible]	.[illegible]	.[illegible]
22	.[illegible]	.[illegible]	.[illegible]	.[illegible]	.[illegible]	.[illegible]	.[illegible]	.[illegible]	.[illegible]	.[illegible]
23	.333	.334	.314	.[illegible]	.[illegible]	.[illegible]	.[illegible]	.[illegible]	.[illegible]	.[illegible]
24	.[illegible]	.[illegible]	.[illegible]	.[illegible]	.[illegible]	.[illegible]	.[illegible]	.[illegible]	.[illegible]	.[illegible]
25	.306	.[illegible]	.[illegible]	.[illegible]	.[illegible]	.[illegible]	.[illegible]	.[illegible]	.[illegible]	.[illegible]
26	.[illegible]	.[illegible]	.[illegible]	.[illegible]	.[illegible]	.[illegible]	.[illegible]	.[illegible]	.[illegible]	.[illegible]
27	.[illegible]	.[illegible]	.[illegible]	.[illegible]	.[illegible]	.[illegible]	.[illegible]	.[illegible]	.[illegible]	.[illegible]
28	.501	.319	.329	.[illegible]	.[illegible]	.333	.316	.265	.[illegible]	.285
29	.[illegible]	.[illegible]	.[illegible]	.399	.367	.[illegible]	.[illegible]	.[illegible]	.[illegible]	.[illegible]
30	.339	.309	.[illegible]	.[illegible]	.[illegible]	.[illegible]	.[illegible]	.[illegible]	.[illegible]	.[illegible]
31	.[illegible]	.[illegible]	.[illegible]	.[illegible]	.[illegible]	.[illegible]	.[illegible]	.[illegible]	.[illegible]	.[illegible]
32	.[illegible]	.[illegible]	.[illegible]	.[illegible]	.[illegible]	.[illegible]	.[illegible]	.[illegible]	.[illegible]	.[illegible]
33	.[illegible]	.[illegible]	.[illegible]	.[illegible]	.[illegible]	.[illegible]	.[illegible]	.[illegible]	.[illegible]	.[illegible]
34	.[illegible]	.[illegible]	.[illegible]	.[illegible]	.[illegible]	.[illegible]	.[illegible]	.[illegible]	.[illegible]	.[illegible]
35	.381	.[illegible]	.[illegible]	.[illegible]	.[illegible]	.[illegible]	.[illegible]	.[illegible]	.[illegible]	.[illegible]
36	.[illegible]	.[illegible]	.[illegible]	.[illegible]	.[illegible]	.[illegible]	.[illegible]	.[illegible]	.[illegible]	.[illegible]
37	.[illegible]	.[illegible]	.[illegible]	.[illegible]	.[illegible]	.[illegible]	.[illegible]	.[illegible]	.[illegible]	.[illegible]
38	.[illegible]	.[illegible]	.[illegible]	.[illegible]	.[illegible]	.[illegible]	.[illegible]	.[illegible]	.[illegible]	.[illegible]
39	.[illegible]	.[illegible]	.[illegible]	.[illegible]	.[illegible]	.[illegible]	.[illegible]	.[illegible]	.[illegible]	.[illegible]
40	.[illegible]	.[illegible]	.[illegible]	.[illegible]	.[illegible]	.[illegible]	.[illegible]	.[illegible]	.[illegible]	.[illegible]
41	.[illegible]	.[illegible]	.[illegible]	.[illegible]	.[illegible]	.[illegible]	.[illegible]	.[illegible]	.[illegible]	.[illegible]
42	.[illegible]	.[illegible]	.[illegible]	.[illegible]	.[illegible]	.[illegible]	.[illegible]	.[illegible]	.[illegible]	.[illegible]
43	.[illegible]	.[illegible]	.[illegible]	.[illegible]	.[illegible]	.[illegible]	.[illegible]	.[illegible]	.[illegible]	.[illegible]
44	.[illegible]	.[illegible]	.[illegible]	.[illegible]	.[illegible]	.[illegible]	.[illegible]	.[illegible]	.[illegible]	.[illegible]
45	.[illegible]	.[illegible]	.[illegible]	.[illegible]	.[illegible]	.[illegible]	.[illegible]	.[illegible]	.[illegible]	.[illegible]
46	.[illegible]	.[illegible]	.[illegible]	.[illegible]	.[illegible]	.[illegible]	.[illegible]	.[illegible]	.[illegible]	.[illegible]
47	.[illegible]	.[illegible]	.[illegible]	.[illegible]	.[illegible]	.[illegible]	.[illegible]	.[illegible]	.[illegible]	.[illegible]
48	.[illegible]	.[illegible]	.[illegible]	.[illegible]	.[illegible]	.[illegible]	.[illegible]	.[illegible]	.[illegible]	.[illegible]
49	.[illegible]	.[illegible]	.[illegible]	.[illegible]	.[illegible]	.[illegible]	.[illegible]	.[illegible]	.[illegible]	.[illegible]
50	.[illegible]	.[illegible]	.[illegible]	.[illegible]	.[illegible]	.[illegible]	.[illegible]	.[illegible]	.[illegible]	.[illegible]
51	.[illegible]	.[illegible]	.[illegible]	.[illegible]	.[illegible]	.[illegible]	.[illegible]	.[illegible]	.[illegible]	.[illegible]
52	.[illegible]	.[illegible]	.[illegible]	.[illegible]	.[illegible]	.[illegible]	.[illegible]	.[illegible]	.[illegible]	.[illegible]
53	.[illegible]	.[illegible]	.[illegible]	.[illegible]	.[illegible]	.[illegible]	.[illegible]	.[illegible]	.[illegible]	.[illegible]
54	.[illegible]	.[illegible]	.[illegible]	.[illegible]	.[illegible]	.[illegible]	.[illegible]	.[illegible]	.[illegible]	.[illegible]
55	.[illegible]	.[illegible]	.[illegible]	.[illegible]	.[illegible]	.[illegible]	.[illegible]	.[illegible]	.[illegible]	.[illegible]
56	.[illegible]	.[illegible]	.[illegible]	.[illegible]	.[illegible]	.[illegible]	.[illegible]	.[illegible]	.[illegible]	.[illegible]
57	.[illegible]	.[illegible]	.[illegible]	.[illegible]	.[illegible]	.[illegible]	.[illegible]	.[illegible]	.[illegible]	.[illegible]
58	.[illegible]	.[illegible]	.[illegible]	.[illegible]	.[illegible]	.[illegible]	.[illegible]	.[illegible]	.[illegible]	.[illegible]
59	.[illegible]	.[illegible]	.[illegible]	.[illegible]	.[illegible]	.[illegible]	.[illegible]	.[illegible]	.[illegible]	.[illegible]
60	.[illegible]	.[illegible]	.[illegible]	.[illegible]	.[illegible]	.[illegible]	.[illegible]	.[illegible]	.[illegible]	.[illegible]
61	.[illegible]	.[illegible]	.[illegible]	.[illegible]	.[illegible]	.[illegible]	.[illegible]	.[illegible]	.[illegible]	.[illegible]
62	.[illegible]	.[illegible]	.[illegible]	.[illegible]	.[illegible]	.[illegible]	.[illegible]	.[illegible]	.[illegible]	.[illegible]
63	.[illegible]	.[illegible]	.[illegible]	.[illegible]	.[illegible]	.[illegible]	.[illegible]	.[illegible]	.[illegible]	.[illegible]
64	.[illegible]	.[illegible]	.[illegible]	.[illegible]	.[illegible]	.[illegible]	.[illegible]	.[illegible]	.[illegible]	.[illegible]
65	.[illegible]	.[illegible]	.[illegible]	.[illegible]	.[illegible]	.[illegible]	.[illegible]	.[illegible]	.[illegible]	.[illegible]
66	.[illegible]	.[illegible]	.[illegible]	.[illegible]	.[illegible]	.[illegible]	.[illegible]	.[illegible]	.[illegible]	.[illegible]
67	.[illegible]	.[illegible]	.[illegible]	.[illegible]	.[illegible]	.[illegible]	.[illegible]	.[illegible]	.[illegible]	.[illegible]
68	.[illegible]	.[illegible]	.[illegible]	.[illegible]	.[illegible]	.[illegible]	.[illegible]	.[illegible]	.[illegible]	.[illegible]
69	.[illegible]	.[illegible]	.[illegible]	.[illegible]	.[illegible]	.[illegible]	.[illegible]	.[illegible]	.[illegible]	.[illegible]
70	.[illegible]	.[illegible]	.[illegible]	.[illegible]	.[illegible]	.[illegible]	.[illegible]	.[illegible]	.[illegible]	.[illegible]
71	.[illegible]	.[illegible]	.[illegible]	.[illegible]	.[illegible]	.[illegible]	.[illegible]	.[illegible]	.[illegible]	.[illegible]
72	.[illegible]	.[illegible]	.[illegible]	.[illegible]	.[illegible]	.[illegible]	.[illegible]	.[illegible]	.[illegible]	.[illegible]
73	.[illegible]	.[illegible]	.[illegible]	.[illegible]	.[illegible]	.[illegible]	.[illegible]	.[illegible]	.[illegible]	.[illegible]
74	.[illegible]	.[illegible]	.[illegible]	.[illegible]	.[illegible]	.[illegible]	.[illegible]	.[illegible]	.[illegible]	.[illegible]
75	.[illegible]	.[illegible]	.[illegible]	.[illegible]	.[illegible]	.[illegible]	.[illegible]	.[illegible]	.[illegible]	.[illegible]
76	.[illegible]	.[illegible]	.[illegible]	.[illegible]	.[illegible]	.[illegible]	.[illegible]	.[illegible]	.[illegible]	.[illegible]
77	.[illegible]	.[illegible]	.[illegible]	.[illegible]	.[illegible]	.[illegible]	.[illegible]	.[illegible]	.[illegible]	.[illegible]
78	.[illegible]	.[illegible]	.[illegible]	.[illegible]	.[illegible]	.[illegible]	.[illegible]	.[illegible]	.[illegible]	.[illegible]
79	.[illegible]	.[illegible]	.[illegible]	.[illegible]	.[illegible]	.[illegible]	.[illegible]	.[illegible]	.[illegible]	.[illegible]
80	.[illegible]	.[illegible]	.[illegible]	.[illegible]	.[illegible]	.[illegible]	.[illegible]	.[illegible]	.[illegible]	.[illegible]
81	.[illegible]	.[illegible]	.[illegible]	.[illegible]	.[illegible]	.[illegible]	.[illegible]	.[illegible]	.[illegible]	.[illegible]
82	.[illegible]	.[illegible]	.[illegible]	.[illegible]	.[illegible]	.[illegible]	.[illegible]	.[illegible]	.[illegible]	.[illegible]
83	.[illegible]	.[illegible]	.[illegible]	.[illegible]	.[illegible]	.[illegible]	.[illegible]	.[illegible]	.[illegible]	.[illegible]
84	.[illegible]	.[illegible]	.[illegible]	.[illegible]	.[illegible]	.[illegible]	.[illegible]	.[illegible]	.[illegible]	.[illegible]
85	.[illegible]	.[illegible]	.[illegible]	.[illegible]	.[illegible]	.[illegible]	.[illegible]	.[illegible]	.[illegible]	.[illegible]
86	.[illegible]	.[illegible]	.[illegible]	.[illegible]	.[illegible]	.[illegible]	.[illegible]	.[illegible]	.[illegible]	.[illegible]
87	.[illegible]	.[illegible]	.[illegible]	.[illegible]	.[illegible]	.[illegible]	.[illegible]	.[illegible]	.[illegible]	.[illegible]
88	.[illegible]	.[illegible]	.[illegible]	.[illegible]	.[illegible]	.[illegible]	.[illegible]	.[illegible]	.[illegible]	.[illegible]
89	.[illegible]	.[illegible]	.[illegible]	.[illegible]	.[illegible]	.[illegible]	.[illegible]	.[illegible]	.[illegible]	.[illegible]
90	.[illegible]	.[illegible]	.[illegible]	.[illegible]	.[illegible]	.[illegible]	.[illegible]	.[illegible]	.[illegible]	.[illegible]
91	.[illegible]	.[illegible]	.[illegible]	.[illegible]	.[illegible]	.[illegible]	.[illegible]	.[illegible]	.[illegible]	.[illegible]
92	.[illegible]	.[illegible]	.[illegible]	.[illegible]	.[illegible]	.[illegible]	.[illegible]	.[illegible]	.[illegible]	.[illegible]
93	.[illegible]	.[illegible]	.[illegible]	.[illegible]	.[illegible]	.[illegible]	.[illegible]	.[illegible]	.[illegible]	.[illegible]
94	.[illegible]	.[illegible]	.[illegible]	.[illegible]	.[illegible]	.[illegible]	.[illegible]	.[illegible]	.[illegible]	.[illegible]
95	.[illegible]	.[illegible]	.[illegible]	.[illegible]	.[illegible]	.[illegible]	.[illegible]	.[illegible]	.[illegible]	.[illegible]
96	.[illegible]	.[illegible]	.[illegible]	.[illegible]	.[illegible]	.[illegible]	.[illegible]	.[illegible]	.[illegible]	.[illegible]
97	.[illegible]	.[illegible]	.[illegible]	.[illegible]	.[illegible]	.[illegible]	.[illegible]	.[illegible]	.[illegible]	.[illegible]
98	.[illegible]	.[illegible]	.[illegible]	.[illegible]	.[illegible]	.[illegible]	.[illegible]	.[illegible]	.[illegible]	.[illegible]
99	.[illegible]	.[illegible]	.[illegible]	.[illegible]	.[illegible]	.[illegible]	.[illegible]	.[illegible]	.[illegible]	.[illegible]
00	.[illegible]	.[illegible]	.[illegible]	.[illegible]	.[illegible]	.[illegible]	.[illegible]	.[illegible]	.[illegible]	.[illegible]
01	.[illegible]	.[illegible]	.[illegible]	.[illegible]	.[illegible]	.[illegible]	.[illegible]	.[illegible]	.[illegible]	.[illegible]
02	.[illegible]	.[illegible]	.[illegible]	.[illegible]	.[illegible]	.[illegible]	.[illegible]	.[illegible]	.[illegible]	.[illegible]
03	.[illegible]	.[illegible]	.[illegible]	.[illegible]	.[illegible]	.[illegible]	.[illegible]	.[illegible]	.[illegible]	.[illegible]
04	.[illegible]	.[illegible]	.[illegible]	.[illegible]	.[illegible]	.[illegible]	.[illegible]	.[illegible]	.[illegible]	.[illegible]
05	.[illegible]	.[illegible]	.[illegible]	.[illegible]	.[illegible]	.[illegible]	.[illegible]	.[illegible]	.[illegible]	.[illegible]
06	.[illegible]	.[illegible]	.[illegible]	.[illegible]	.[illegible]	.[illegible]	.[illegible]	.[illegible]	.[illegible]	.[illegible]
07	.[illegible]	.[illegible]	.[illegible]	.[illegible]	.[illegible]	.[illegible]	.[illegible]	.[illegible]	.[illegible]	.[illegible]
08	.[illegible]	.[illegible]	.[illegible]	.[illegible]	.[illegible]	.[illegible]	.[illegible]	.[illegible]	.[illegible]	.[illegible]
09	.[illegible]	.[illegible]	.[illegible]	.[illegible]	.[illegible]	.[illegible]	.[illegible]	.[illegible]	.[illegible]	.[illegible]
10	.[illegible]	.[illegible]	.[illegible]	.[illegible]	.[illegible]	.[illegible]	.[illegible]	.[illegible]	.[illegible]	.[illegible]
11	.[illegible]	.[illegible]	.[illegible]	.[illegible]	.[illegible]	.[illegible]	.[illegible]	.[illegible]	.[illegible]	.[illegible]
12	.[illegible]	.[illegible]	.[illegible]	.[illegible]	.[illegible]	.[illegible]	.[illegible]	.[illegible]	.[illegible]	.[illegible]
13	.[illegible]	.[illegible]	.[illegible]	.[illegible]	.[illegible]	.[illegible]	.[illegible]	.[illegible]	.[illegible]	.[illegible]
14	.[illegible]	.[illegible]	.[illegible]	.[illegible]	.[illegible]	.[illegible]	.[illegible]	.[illegible]	.[illegible]	.[illegible]
15	.[illegible]	.[illegible]	.[illegible]	.[illegible]	.[illegible]	.[illegible]	.[illegible]	.[illegible]	.[illegible]	.[illegible]
16	.[illegible]	.[illegible]	.[illegible]	.[illegible]	.[illegible]	.[illegible]	.[illegible]	.[illegible]	.[illegible]	.[illegible]
17	.[illegible]	.[illegible]	.[illegible]	.[illegible]	.[illegible]	.[illegible]	.[illegible]	.[illegible]	.[illegible]	.[illegible]
18	.[illegible]	.[illegible]	.[illegible]	.[illegible]	.[illegible]	.[illegible]	.[illegible]	.[illegible]	.[illegible]	.[illegible]
19	.[illegible]	.[illegible]	.[illegible]	.[illegible]	.[illegible]	.[illegible]	.[illegible]	.[illegible]	.[illegible]	.[illegible]
20	.[illegible]	.[illegible]	.[illegible]	.[illegible]	.[illegible]	.[illegible]	.[illegible]	.[illegible]	.[illegible]	.[illegible]
21	.[illegible]	.[illegible]	.[illegible]	.[illegible]	.[illegible]	.[illegible]	.[illegible]	.[illegible]	.[illegible]	.[illegible]
22	.[illegible]	.[illegible]	.[illegible]	.[illegible]	.[illegible]	.[illegible]	.[illegible]	.[illegible]	.[illegible]	.[illegible]
23	.[illegible]	.[illegible]	.[illegible]	.[illegible]	.[illegible]	.[illegible]	.[illegible]	.[illegible]	.[illegible]	.[illegible]
24	.[illegible]	.[illegible]	.[illegible]	.[illegible]	.[illegible]	.[illegible]	.[illegible]	.[illegible]	.[illegible]	.[illegible]
25	.[illegible]	.[illegible]	.[illegible]	.[illegible]	.[illegible]	.[illegible]	.[illegible]	.[illegible]	.[illegible]	.[illegible]
26	.[illegible]	.[illegible]	.[illegible]	.[illegible]	.[illegible]	.[illegible]	.[illegible]	.[illegible]	.[illegible]	.[illegible]
27	.[illegible]	.[illegible]	.[illegible]	.[illegible]	.[illegible]	.[illegible]	.[illegible]	.[illegible]	.[illegible]	.[illegible]
28	.[illegible]	.[illegible]	.[illegible]	.[illegible]	.[illegible]	.[illegible]	.[illegible]	.[illegible]	.[illegible]	.[illegible]
29	.[illegible]	.[illegible]	.[illegible]	.[illegible]	.[illegible]	.[illegible]	.[illegible]	.[illegible]	.[illegible]	.[illegible]
30	.[illegible]	.[illegible]	.[illegible]	.[illegible]	.[illegible]	.[illegible]	.[illegible]	.[illegible]	.[illegible]	.[illegible]
31	.[illegible]	.[illegible]	.[illegible]	.[illegible]	.[illegible]	.[illegible]	.[illegible]	.[illegible]	.[illegible]	.[illegible]
32	.[illegible]	.[illegible]	.[illegible]	.[illegible]	.[illegible]	.[illegible]	.[illegible]	.[illegible]	.[illegible]	.[illegible]
33	.[illegible]	.[illegible]	.[illegible]	.[illegible]	.[illegible]	.[illegible]	.[illegible]	.[illegible]	.[illegible]	.[illegible]
34	.[illegible]	.[illegible]	.[illegible]	.[illegible]	.[illegible]	.[illegible]	.[illegible]	.[illegible]	.[illegible]	.[illegible]
35	.[illegible]	.[illegible]	.[illegible]	.[illegible]	.[illegible]	.[illegible]	.[illegible]	.[illegible]	.[illegible]	.[illegible]
36	.[illegible]	.[illegible]	.[illegible]	.[illegible]	.[illegible]	.[illegible]	.[illegible]	.[illegible]	.[illegible]	.[illegible]
37	.[illegible]	.[illegible]	.[illegible]	.[illegible]	.[illegible]	.[illegible]	.[illegible]	.[illegible]	.[illegible]	.[illegible]
38	.[illegible]	.[illegible]	.[illegible]	.[illegible]	.[illegible]	.[illegible]	.[illegible]	.[illegible]	.[illegible]	.[illegible]
39	.[illegible]	.[illegible]	.[illegible]	.[illegible]	.[illegible]	.[illegible]	.[illegible]	.[illegible]	.[illegible]	.[illegible]
40	.[illegible]	.[illegible]	.[illegible]	.[illegible]	.[illegible]	.[illegible]	.[illegible]	.[illegible]	.[illegible]	.[illegible]
41	.[illegible]	.[illegible]	.[illegible]	.[illegible]	.[illegible]	.[illegible]	.[illegible]	.[illegible]	.[illegible]	.[illegible]
42	.[illegible]	.[illegible]	.[illegible]	.[illegible]	.[illegible]	.[illegible]	.[illegible]	.[illegible]	.[illegible]	.[illegible]
43	.[illegible]	.[illegible]	.[illegible]	.[illegible]	.[illegible]	.[illegible]	.[illegible]	.[illegible]	.[illegible]	.[illegible]
44	.[illegible]	.[illegible]	.[illegible]	.[illegible]	.[illegible]	.[illegible]	.[illegible]	.[illegible]	.[illegible]	.[illegible]
45	.[illegible]	.[illegible]	.[illegible]	.[illegible]	.[illegible]	.[illegible]	.[illegible]	.[illegible]	.[illegible]	.[illegible]
46	.[illegible]	.[illegible]	.[illegible]	.[illegible]	.[illegible]	.[illegible]	.[illegible]	.[illegible]	.[illegible]	.[illegible]
47	.[illegible]	.[illegible]	.[illegible]	.[illegible]	.[illegible]	.[illegible]	.[illegible]	.[illegible]	.[illegible]	.[illegible]
48	.[illegible]	.[illegible]	.[illegible]	.[illegible]	.[illegible]	.[illegible]	.[illegible]	.[illegible]	.[illegible]	.[illegible]
49	.[illegible]	.[illegible]	.[illegible]	.[illegible]	.[illegible]	.[illegible]	.[illegible]	.[illegible]	.[illegible]	.[illegible]
50	.[illegible]	.[illegible]	.[illegible]	.[illegible]	.[illegible]	.[illegible]	.[illegible]	.[illegible]	.[illegible]	.[illegible]
51	.[illegible]	.[illegible]	.[illegible]	.[illegible]	.[illegible]	.[illegible]	.[illegible]	.[illegible]	.[illegible]	.[illegible]
52	.[illegible]	.[illegible]	.[illegible]	.[illegible]	.[illegible]	.[illegible]	.[illegible]	.[illegible]	.[illegible]	.[illegible]
53	.[illegible]	.[illegible]	.[illegible]	.[illegible]	.[illegible]	.[illegible]	.[illegible]	.[illegible]	.[illegible]	.[illegible]
54	.[illegible]	.[illegible]	.[illegible]	.[illegible]	.[illegible]	.[illegible]	.[illegible]	.[illegible]	.[illegible]	.[illegible]
55	.[illegible]	.[illegible]	.[illegible]	.[illegible]	.[illegible]	.[illegible]	.[illegible]	.[illegible]	.[illegible]	.[illegible]
56	.[illegible]	.[illegible]	.[illegible]	.[illegible]	.[illegible]	.[illegible]	.[illegible]	.[illegible]	.[illegible]	.[illegible]
57	.[illegible]	.[illegible]	.[illegible]	.[illegible]	.[illegible]	.[illegible]	.[illegible]	.[illegible]	.[illegible]	.[illegible]
58	.[illegible]	.[illegible]	.[illegible]	.[illegible]	.[illegible]	.[illegible]	.[illegible]	.[illegible]	.[illegible]	.[illegible]
59	.[illegible]	.[illegible]	.[illegible]	.[illegible]	.[illegible]	.[illegible]	.[illegible]	.[illegible]	.[illegible]	.[illegible]
60	.[illegible]	.[illegible]	.[illegible]	.[illegible]	.[illegible]	.[illegible]	.[illegible]	.[illegible]	.[illegible]	.[illegible]

Run No. 54 ; u component

Separation Distance (m.)

K	6	12	18	24	36	42	48	72	84	90
00	.104	.958,-1	.113	.908,-1	.556,-1	.108	.114	.965,-1	.885,-1	.120
01	.130	.993,-1	.965,-1	.749,-1	.635,-1	.106	.106	.571,-1	.650,-1	.118
02	.170	.122	.114	.699,-1	.893,-1	.118	.102	.287,-1	.718,-1	.113
03	.151	.102	.132	.817,-1	.602,-1	.138	.113	-.454,-2	.616,-1	.127
04	.184	.124	.155	.784,-1	.627,-1	.143	.128	.109,-2	.468,-1	.123
05	.168	.156	.123	.772,-1	.522,-1	.111	.151	.214,-1	.287,-1	.145
06	.149	.153	.119	.103	.411,-1	.104	.149	.160,-1	.162,-2	.154
07	.155	.135	.107	.122	.562,-1	.119	.138	.305,-2	-.153,-2	.137
08	.192	.118	.112	.129	.836,-1	.111	.156	.267,-1	.143,-1	.122
09	.212	.138	.127	.154	.691,-1	.895,-1	.164	.284,-1	.579,-1	.148
10	.180	.136	.941,-1	.160	.539,-1	.774,-1	.185	.350,-1	.706,-1	.137
11	.192	.133	.886,-1	.146	.666,-1	.778,-1	.176	.546,-1	.952,-1	.120
12	.179	.115	.116	.116	.575,-1	.844,-1	.158	.372,-1	.957,-1	.112
13	.194	.749,-1	.107	.112	.560,-1	.124	.163	.309,-1	.995,-1	.127
14	.181	.792,-1	.118	.123	.650,-1	.111	.165	.454,-2	.101	.128
15	.175	.676,-1	.118	.145	.710,-1	.104	.159	.210,-1	.808,-1	.105
16	.156	.640,-1	.949,-1	.126	.739,-1	.858,-1	.162	.508,-2	.804,-1	.118
17	.159	.414,-1	.708,-1	.112	.758,-1	.710,-1	.144	-.346,-2	.994,-1	.124
18	.128	.499,-1	.754,-1	.104	.103	.104	.120	-.132,-1	.852,-1	.121
19	.108	.429,-1	.860,-1	.103	.103	.127	.789,-1	-.334,-1	.727,-1	.122
20	.867,-1	.464,-1	.798,-1	.770,-1	.216,-1	.138	.760,-1	-.281,-1	.415,-1	.121
21	.764,-1	.326,-1	.734,-1	.827,-1	.813,-1	.122	.807,-1	-.888,-2	.220,-1	.129
22	.786,-1	.332,-1	.849,-1	.697,-1	.867,-1	.132	.105	-.208,-1	.275,-2	.143
23	.100	.328,-1	950,-1	.756,-1	.102	.102	.115	-.211,-1	.185,-1	.163
24	.984,-1	.167,-1	.902,-1	.800,-1	.118	.921,-1	.839,-1	-.547,-2	.122,-1	.177
25	.883,-1	.188,-1	.114	.112	.941,-1	.102	.792,-1	.225,-1	.446,-1	.194
26	.833,-1	.281,-1	.118	.142	.115	.924,-1	.782,-1	.366,-1	.922,-1	.165
27	.105	.425,-1	.116	.139	.921,-1	.19	.844,-1	.356,-1	.678,-1	.152
28	.991,-1	.502,-1	.122	.132	.103	.146	.969,-1	.518,-1	.493,-1	.138
29	.107	.906,-1	.131	.122	.109	.133	.106	.488,-1	.338,-1	.139
30	.108	.732,-1	.109	.146	.102	.132	.693,-1	.551,-1	.336,-1	.154
31	.153	.837,-1	.877,-1	.124	.112	.112	.516,-1	.778,-1	.513,-1	.148
32	.166	.599,-1	.755,-1	.133	.122	.779,-1	.723,-1	.951,-1	.566,-1	.159
33	.173	.640,-1	.720,-1	.151	.648,-1	.854,-1	.111	.937,-1	.781,-1	.140
34	.174	.718,-1	.570,-1	.154	.711,-1	.101	.116	.105	.801,-1	.133
35	.184	.557,-1	.703,-1	.145	.622,-1	.970,-1	.113	.931,-1	.112	.126
36	.199	.730,-1	.790,-1	.153	.290,-1	.106	.110	.934,-1	.138	.144
37	.161	.570,-1	.966,-1	.155	.479,-1	.104	.102	.112	.139	.137
38	.157	.101	.142	.160	.372,-1	.140	.108	.102	.120	.143
39	.150	.117	.134	.150	.488,-1	.154	.106	.832,-1	.102	.140
40	.138	.136	.136	.144	.387,-1	.163	.102	.886,-1	.131	.167
41	.108	.110	.139	.132	.438,-1	.149	.776,-1	.829,-1	.108	.157
42	.101	.104	.145	.126	.539,-1	.162	.656,-1	.861,-1	.111	.130
43	.104	.908,-1	.148	.115	.331,-1	.152	.520,-1	.111	.127	.873,-1
44	.101	.105	.109	.103	.491,-1	.141	.640,-1	.127	.122	.694,-1
45	.126	.114	.937,-1	.110	.539,-1	.137	.987,-1	.118	.126	.513,-1
46	.126	.119	.880,-1	.102	.290,-1	.137	.135	.117	.125	.635,-1
47	.148	.124	.834,-1	.697,-1	.919,-2	.118	.162	.155	.120	.797,-1
48	.153	.122	.599,-1	.596,-1	.261,-1	.105	.188	.178	.102	.111
49	.153	.785,-1	.709,-1	.468,-1	.406,-1	.920,-1	.168	.165	.666,-1	.121
50	.171	.909,-1	.103	.386,-1	.353,-1	.903,-1	.132	.141	.732,-1	.987,-1
51	.158	.740,-1	.115	.480,-1	.193,-1	.761,-1	.123	.114	.813,-1	.613,-1
52	.141	.673,-1	.127	.649,-1	-.483,-3	.102	.118	.936,-1	.895,-1	.566,-1
53	.125	.741,-1	.147	.275,-1	-.556,-2	.125	.136	.685,-1	.783,-1	.522,-1
54	.124	.811,-1	.133	.261,-1	.341,-1	.135	.127	.735,-1	.735,-1	.344,-1
55	.997,-1	.652,-1	.146	.453,-1	.271,-1	.137	.101	.842,-1	.664,-1	.195,-1
56	.125	.739,-1	.156	.405,-1	.375,-1	.121	.109	.958,-1	.323,-1	.260,-1
57	.945,-1	.631,-1	.152	.113,-1	.251,-1	.121	.859,-1	.811,-1	.507,-1	.159,-1
58	.104	.896,-1	.152	-.312,-2	.162,-1	.124	.931,-1	.101	.580,-1	.260,-2
59	.993,-1	.533,-1	.127	.288,-2	.338,-1	.100	.108	.122	.450,-1	.174,-1
60	.864,-1	.247,-1	.104	.455,-2	.527,-1	.600,-1	.954,-1	.135	.245,-1	.125,-1

Run No. 54 ; v component

Separation Distance (m.)

K	6	12	18	24	36	42	48	72	84	90
00	.272	.133	.954,-1	.158	.113	.125	.581,-1	.923,-1	.899,-1	.659,-1
01	.276	.146	.827,-1	.133	.117	.922,-1	.547,-1	.678,-1	.875,-1	.689,-1
02	.226	.131	.482,-1	.104	.122	.642,-1	.472,-1	.105	.782,-1	.828,-1
03	.188	.180	.975,-1	.849,-1	.126	.101	.909,-1	.608,-1	.105	.121
04	.148	.200	.156	.117	.907,-1	.165	.108	.932,-1	.659,-1	.861,-1
05	.157	.196	.143	.152	.132	.133	.115	.106	.985,-1	.677,-1
06	.148	.145	.140	.140	.110	.117	.966,-1	.741,-1	.426,-1	.869,-1
07	.173	.113	.115	.111	.156	.920,-1	.461,-1	.469,-1	.254,-1	.284,-1
08	.128	.106	.974,-1	.950,-1	.166	.727,-1	.790,-1	.599,-1	.783,-1	.401,-1
09	.767,-1	.122	.118	.131	.151	.815,-1	.835,-1	-.854,-2	.101	.493,-1
10	.999,-1	.941,-1	.905,-1	.874,-1	.138	.105	.755,-1	.506,-1	.724,-1	.113
11	.707,-1	.792,-1	.968,-1	.745,-1	.815,-1	.970,-1	.354,-1	.533,-1	.693,-1	.756,-1
12	.850,-1	.834,-1	.958,-1	.106	.886,-1	.110	.898,-1	.824,-1	.865,-1	.921,-1
13	.688,-1	.471,-1	.843,-1	.945,-1	.106	.707,-1	.771,-1	.639,-1	.691,-1	.100
14	.605,-1	.725,-1	.890,-1	.856,-1	.120	.836,-1	.822,-1	.451,-1	.102	.840,-1
15	.617,-1	.923,-1	.749,-1	.802,-1	.122	.108	.639,-1	.906,-1	.935,-1	.542,-1
16	.627,-1	.106	.130	.111	.125	.948,-1	.672,-1	.984,-1	.627,-1	.510,-1
17	.733,-1	.710,-1	.837,-1	.109	.136	.892,-1	.699,-1	.925,-1	.111	.572,-1
18	.934,-1	.744,-1	.953,-1	.117	.118	.101	.683,-1	.111	.643,-1	.776,-1
19	.749,-1	.131	.939,-1	.772,-1	.105	.125	.750,-1	.604,-1	.713,-1	.124
20	.868,-1	.101	.831,-1	.641,-1	.880,-1	.146	.675,-1	.931,-1	.127	.447,-1
21	.120	.101	.696,-1	.293,-1	.918,-1	.140	.874,-1	.102	.109	.912,-1
22	.123	.621,-1	.111	.448,-1	.724,-1	.103	.692,-1	.120	.847,-1	.103
23	.128	.107	.886,-1	.774,-1	.776,-1	.904,-1	.117	.108	.738,-1	.635,-1
24	.898,-1	.996,-1	.109	.804,-1	.865,-1	.789,-1	.117	.705,-1	.756,-1	.690,-1
25	.943,-1	.108	.125	.639,-1	.178,-1	.902,-1	.117	.937,-1	.658,-1	.381,-1
26	.718,-1	.102	.123	.103	.996,-1	.613,-1	.823,-1	.853,-1	.952,-1	.531,-1
27	.696,-1	.585,-1	.856,-1	.105	.769,-1	.341,-1	.766,-1	.977,-1	.977,-1	.359,-1
28	.447,-1	.108	.937,-1	.889,-1	.101	.159,-1	.623,-1	.777,-1	.635,-1	.376,-1
29	.998,-1	.702,-1	.973,-1	.939,-1	.104	.597,-1	.513,-1	.742,-1	.648,-1	.588,-1
30	.830,-1	.455,-1	.925,-1	.713,-1	.137	.693,-1	.934,-1	.854,-1	.986,-1	.733,-1
31	.667,-1	.729,-1	.867,-1	.108	.867,-1	.705,-1	.920,-1	.455,-1	.748,-1	.757,-1
32	.112	.620,-1	.957,-1	.969,-1	.109	.120	.121	.130	.713,-1	.317,-1
33	.102	.908,-1	.103	.894,-1	.746,-1	.103	.108	.769,-1	.105	.466,-1
34	.712,-1	.605,-1	.656,-1	.118	.976,-1	.846,-1	.938,-1	.556,-1	.546,-1	.858,-1
35	.753,-1	.675,-1	.845,-1	.108	.767,-1	.707,-1	.698,-1	.958,-1	.770,-1	.472,-1
36	.549,-1	.744,-1	.800,-1	.130	.863,-1	.689,-1	.937,-1	.771,-1	.823,-1	.789,-1
37	.469,-1	.110	.694,-1	.112	.123	.934,-1	.795,-1	.808,-1	.107	.477,-1
38	.112	.689,-1	.114	.902,-1	.120	.738,-1	.354,-1	.810,-1	.113	.573,-1
39	.948,-1	.127	.805,-1	.662,-1	.134	.514,-1	.324,-1	.500,-1	.129	.480,-1
40	.579,-1	.161	.553,-1	.781,-1	.693,-1	.794,-1	.140,-1	.230,-1	.991,-1	.602,-1
41	.707,-1	.142	.105	.944,-1	.790,-1	.928,-1	.916,-1	.275,-1	.136	.553,-1
42	.989,-1	.149	.722,-1	.946,-1	.541,-1	.809,-1	.117	.404,-1	.986,-1	.784,-1
43	.117	.141	.704,-1	.130	.775,-1	.801,-1	.635,-1	.295,-1	.619,-1	.104
44	.879,-1	.944,-1	.744,-1	.106	.598,-1	.650,-1	.861,-1	.484,-1	.906,-1	.414,-1
45	.107	.865,-1	.113	.981,-1	.527,-1	.713,-1	.892,-1	.364,-1	.752,-1	.396,-1
46	.661,-1	.607,-1	.156	.943,-1	.106	.760,-1	.869,-1	.295,-1	.278,-1	.908,-1
47	.114	.966,-1	.990,-1	.760,-1	.904,-1	.422,-1	.911,-1	.132,-1	.856,-1	.107
48	.121	.100	.665,-1	.844,-1	.534,-1	.710,-1	.752,-1	.295,-1	.843,-1	.110
49	.885,-1	.115	.808,-1	.124	.120	.107	.927,-1	.268,-1	.483,-1	.475,-1
50	.145	.118	.836,-1	.131	.987,-1	.843,-1	.607,-1	.734,-1	.488,-1	.618,-1
51	.137	.104	.739,-1	.800,-1	.719,-1	.716,-1	.921,-1	.918,-1	.692,-1	.757,-1
52	.797,-1	.129	.671,-1	.903,-1	.124	.116	.797,-1	.685,-1	.497,-1	.561,-1
53	.120	.110	.884,-1	.302,-1	.113	.802,-1	.104	.882,-1	.279,-1	.779,-1
54	.112	.896,-1	.619,-1	.962,-2	.116	.913,-1	.101	.959,-1	.644,-1	.550,-1
55	.105	.128	.953,-1	.664,-1	.951,-1	.129	.875,-1	.574,-1	.510,-1	-.840,-3
56	.647,-1	.871,-1	.722,-1	.446,-1	.855,-1	.929,-1	.879,-1	.340,-1	.604,-1	.295,-1
57	.296,-1	.775,-1	.656,-1	.301,-1	.964,-1	.924,-1	.996,-1	.727,-1	.692,-1	.444,-1
58	.284,-1	.113	.479,-1	.571,-1	.127	.693,-1	.690,-1	.111	.433,-1	.334,-1
59	.718,-1	.108	.557,-1	.772,-1	.160	.114	.738,-1	.789,-1	.402,-1	.198,-1
60	.364,-1	.125	.641,-1	.837,-1	.131	.000,-1	.448,-1	.621,-1	.678,-1	.181,-1

Run No. 55 ; u component

K	Separation Distance (m.)									
	6	12	18	24	36	42	48	72	84	90
00	.475	.284	.234	.169	.926,-1	-.476,-2	.174	.126	.908,-3	.782,-1
01	.520	.266	.214	.174	.702,-1	.771,-2	.155	.116	-.407,-1	.578,-1
02	.504	.262	.201	.170	.579,-1	.507,-2	.161	.109	-.537,-1	.343,-1
03	.499	.279	.186	.181	.514,-1	-.277,-1	.166	.993,-1	-.546,-1	.417,-1
04	.447	.287	.181	.204	.501,-1	-.319,-1	.168	.105	-.380,-1	.162,-1
05	.395	.284	.183	.219	.642,-1	-.246,-1	.138	.851,-1	-.453,-1	.481,-2
06	.346	.277	.197	.210	.645,-1	-.484,-2	.121	.831,-1	-.304,-1	-.614,-3
07	.329	.257	.204	.207	.861,-1	.517,-2	.882,-1	.760,-1	-.272,-2	-.198,-1
08	.318	.245	.193	.183	.783,-1	.127,-1	.748,-1	.726,-1	-.220,-1	-.194,-2
09	.298	.232	.178	.177	.861,-1	.310,-1	.943,-1	.752,-1	.380,-2	-.206,-1
10	.278	.219	.174	.171	.651,-1	.354,-1	.716,-1	.696,-1	-.722,-2	-.276,-2
11	.227	.199	.182	.142	.546,-1	.313,-1	.813,-1	.786,-1	-.605,-2	-.563,-2
12	.203	.180	.179	.109	.271,-1	.479,-1	.108	.837,-1	.621,-2	.120,-1
13	.192	.166	.162	.901,-1	.294,-1	.544,-1	.116	.865,-1	.358,-1	.120,-1
14	.168	.141	.153	.835,-1	.408,-1	.548,-1	.782,-1	.746,-1	.127,-1	.146,-1
15	.136	.121	.132	.122	.423,-1	.578,-1	.911,-1	.769,-1	-.479,-2	.818,-2
16	.119	.957,-1	.102	.131	.326,-1	.402,-1	.978,-1	.749,-1	-.885,-2	-.216,-1
17	.883,-1	.847,-1	.852,-1	.140	.344,-1	.459,-1	.985,-1	.726,-1	.109,-1	-.305,-1
18	.761,-1	.938,-1	.890,-1	.140	.175,-1	.374,-1	.950,-1	.669,-1	.368,-1	-.287,-1
19	.557,-1	.795,-1	.101	.140	.394,-1	.377,-1	.100	.698,-1	.383,-1	-.202,-1
20	.645,-1	.634,-1	.113	.172	.342,-1	.240,-1	.773,-1	.889,-1	.285,-1	-.383,-1
21	.686,-1	.612,-1	.109	.165	.441,-1	.253,-2	.567,-1	.896,-1	.371,-1	-.241,-1
22	.692,-1	.397,-1	.853,-1	.147	.540,-1	.604,-2	.660,-1	.842,-1	.517,-1	.818,-3
23	.181,-1	.262,-1	.683,-1	.176	.580,-1	.171,-1	.887,-1	.113	.377,-1	.168,-1
24	.561,-2	.368,-1	.655,-1	.179	.736,-1	.224,-1	.764,-1	.118	.125,-1	.336,-1
25	-.117,-1	.430,-1	.518,-1	.168	.757,-1	.269,-1	.620,-1	.118	.222,-1	.462,-1
26	-.993,-2	.430,-1	.548,-1	.159	.599,-1	.289,-1	.622,-1	.123	.123,-1	.541,-1
27	.116,-1	.390,-1	.485,-1	.158	.480,-1	.507,-1	.684,-1	.128	.792,-2	.703,-1
28	.327,-1	.161,-1	.447,-1	.145	.414,-1	.626,-1	.568,-1	.137	.150,-1	.323,-1
29	.272,-1	.132,-1	.259,-1	.137	.649,-1	.730,-1	.223,-1	.160	.807,-2	.638,-1
30	.339,-1	.336,-1	.129,-1	.122	.528,-1	.678,-1	-.120,-1	.150	.327,-1	.537,-1
31	.577,-1	.434,-1	-.116,-1	.120	.533,-1	.569,-1	-.299,-1	.101	.211,-1	.616,-1
32	.386,-1	.510,-1	-.294,-1	.102	.709,-2	.227,-1	-.142,-1	.110	.211,-1	.485,-1
33	.953,-2	.660,-1	-.290,-1	.961,-1	.175,-2	-.191,-1	-.429,-1	.122	.776,-4	.477,-1
34	.255,-2	.693,-1	-.527,-2	.827,-1	.575,-2	-.462,-2	-.544,-1	.111	.466,-3	.414,-1
35	.322,-2	.566,-1	.232,-1	.705,-1	.187,-1	-.533,-2	-.658,-1	.106	-.321,-1	.356,-1
36	.101,-1	.492,-1	.414,-1	.798,-1	.212,-1	-.122,-1	-.817,-1	.102	-.460,-1	-.624,-2
37	.222,-1	.493,-1	.353,-1	.860,-1	.171,-1	-.120,-1	-.764,-1	.878,-1	-.257,-1	-.391,-1
38	.187,-1	.539,-1	.318,-1	.645,-1	.200,-2	-.748,-2	-.908,-1	.102	-.262,-1	-.470,-1
39	.106,-1	.359,-1	.392,-1	.646,-1	-.170,-1	-.549,-3	-.622,-1	.909,-1	-.281,-1	-.517,-1
40	.180,-1	.210,-1	.333,-1	.558,-1	-.434,-1	.176,-2	-.901,-1	.756,-1	-.332,-1	-.638,-1
41	.107,-1	.122,-1	.182,-1	.687,-1	-.458,-1	-.890,-2	-.804,-1	.707,-1	-.496,-1	-.734,-1
42	-.925,-2	.189,-1	.337,-1	.737,-1	-.662,-1	-.570,-1	-.928,-1	.598,-1	-.438,-1	-.593,-1
43	-.102,-1	.400,-2	.233,-1	.709,-1	-.646,-1	-.593,-1	-.975,-1	.531,-1	-.408,-1	-.425,-1
44	-.819,-2	-.187,-1	-.461,-2	.718,-1	-.683,-1	-.875,-1	-.110	.526,-1	-.394,-1	-.485,-1
45	-.414,-1	-.923,-2	-.303,-1	.654,-1	-.641,-1	-.943,-1	-.492,-1	.354,-1	-.286,-1	-.596,-1
46	-.758,-1	-.380,-3	-.459,-1	.560,-1	-.644,-1	-.101	-.560,-1	.358,-1	.854,-3	-.572,-1
47	-.951,-1	-.138,-1	-.532,-1	.500,-1	-.892,-1	-.974,-1	-.167,-1	.282,-1	.885,-2	-.408,-1
48	-.112	-.327,-1	-.648,-1	.460,-1	-.108	-.945,-1	-.826,-2	.533,-3	.190,-1	-.450,-1
49	-.140	-.472,-1	-.823,-1	.450,-1	-.112	-.945,-1	.290,-1	-.213,-1	-.931,-3	-.433,-1
50	-.116	-.455,-1	-.945,-1	.473,-1	-.917,-1	-.778,-1	.564,-1	-.617,-2	-.203,-1	-.128,-1
51	-.984,-1	-.735,-1	-.806,-1	.617,-1	-.880,-1	-.592,-1	.671,-1	-.315,-1	-.235,-1	-.460,-2
52	-.105	-.102	-.729,-1	.652,-1	-.873,-1	-.563,-1	.634,-1	-.139,-1	-.350,-1	-.227,-1
53	-.778,-1	-.925,-1	-.696,-1	.761,-1	-.706,-1	-.704,-1	.527,-1	-.174,-1	-.405,-1	-.189,-1
54	-.808,-1	-.842,-1	-.702,-1	.745,-1	-.591,-1	-.873,-1	.432,-1	-.202,-1	-.622,-1	-.363,-1
55	-.884,-1	-.107	-.646,-1	.581,-1	-.632,-1	-.537,-1	.416,-1	-.120,-1	-.692,-1	-.500,-1
56	-.911,-1	-.123	-.532,-1	.651,-1	-.598,-1	-.668,-1	.388,-1	-.115,-1	-.650,-1	-.478,-1
57	-.972,-1	-.107	-.572,-1	.539,-1	-.626,-1	-.616,-1	.542,-1	-.158,-1	-.692,-1	-.768,-1
58	-.117	-.100	-.495,-1	.552,-1	-.444,-1	-.333,-1	.558,-1	-.455,-1	-.731,-1	-.637,-1
59	-.119	-.820,-1	-.506,-1	.509,-1	-.562,-1	-.176,-2	.722,-1	-.294,-1	-.435,-1	-.505,-1
60	-.122	-.657,-1	-.393,-1	.544,-1	-.558,-1	.179,-1	.816,-1	.899,-2	-.463,-1	-.353,-1

Run No. 55 ; v component

Separation Distance (m.)

K	6	12	18	24	36	42	48	72	84	90
00	.431	.496	.354	.617,-1	.674,-1	.189,-1	.122	.128	.845,-1	.333,-1
01	.323	.734	.456	.836,-1	.137,-1	.237,-1	.127	.111	.860,-1	.487,-1
02	.198	.261	.267	.549,-1	.550,-1	.264,-1	.109	.859,-1	.879,-1	.651,-1
03	.162	.195	.189	.761,-1	.152,-1	.306,-1	.778,-1	.951,-1	.688,-1	.580,-1
04	.108	.148	.166	.694,-1	.403,-1	.352,-1	.106	.413,-1	.712,-1	.285,-1
05	.882,-1	.120	.138	.108	.378,-1	.500,-1	.798,-1	.783,-1	.759,-1	.300,-1
06	.112	.103	.108	.136	.988,-1	.650,-1	.924,-1	.904,-1	.604,-1	.596,-1
07	.642,-1	.614,-1	.112	.106	.984,-1	.982,-1	.491,-1	.754,-1	.850,-1	.493,-1
08	.769,-1	.604,-1	.799,-1	.132	.111	.123	.722,-1	.205,-1	.325,-1	.147,-1
09	.410,-1	.532,-1	.930,-1	.157	.120	.123	.117	.448,-1	.277,-1	.755,-1
10	.531,-1	-.979,-2	.776,-1	.120	.115	.105	.555,-1	-.696,-2	.272,-3	.111
11	.439,-1	.592,-2	.585,-1	.107	.106	.139	.879,-1	.158,-1	.427,-2	.685,-1
12	.175,-1	.716,-1	.345,-1	.120	.842,-1	.108	.911,-1	.526,-2	.644,-2	.440,-1
13	.275,-1	.426,-2	.387,-1	.717,-1	.667,-1	.941,-1	.741,-1	.224,-1	.630,-2	.269,-1
14	.181,-1	-.304,-2	.127,-1	.967,-1	.358,-1	.102	.998,-1	.538,-1	-.119,-1	.261,-1
15	-.126,-1	-.517,-2	.221,-1	.909,-1	.525,-1	.819,-1	.779,-1	.140,-1	.166,-1	.406,-1
16	-.500,-2	.269,-1	.175,-1	.116	.787,-1	.643,-1	.421,-1	.554,-1	.232,-1	.470,-1
17	.203,-1	-.453,-2	.378,-2	.938,-1	.100	.711,-1	.585,-1	.914,-1	.739,-1	.636,-1
18	.427,-1	.397,-1	.296,-1	.109	.860,-1	.404,-1	.852,-1	.630,-1	.759,-1	.403,-1
19	.268,-2	.108,-1	.679,-1	.965,-1	.921,-1	.497,-1	.858,-1	.200,-1	.510,-1	.591,-1
20	.316,-1	.449,-1	.236,-1	.148	.973,-1	.631,-1	.684,-1	.806,-1	.460,-1	.551,-1
21	.290,-1	.446,-1	.593,-1	.680,-1	.124	.663,-1	.483,-1	.351,-1	.330,-1	.216,-1
22	.241,-1	-.864,-2	.137,-1	.104	.895,-1	.815,-1	.102	.454,-1	.318,-1	.334,-1
23	.634,-2	-.113,-1	.971,-2	.108	.119	.102	.518,-1	.609,-1	.268,-1	.545,-1
24	.567,-1	-.808,-2	.518,-1	.102	.724,-1	.116	.270,-1	.795,-1	.720,-1	.513,-1
25	.352,-1	.723,-1	.763,-1	.116	.896,-1	.130	.623,-1	.439,-1	.628,-1	.105
26	.388,-1	.607,-1	.726,-1	.138	.103	.146	.616,-1	.613,-1	.443,-1	.726,-1
27	.318,-1	.672,-1	.337,-1	.164	.132	.114	.295,-1	.599,-1	.436,-1	.788,-1
28	.144,-1	.304,-1	.483,-1	.149	.111	.126	.426,-1	.828,-1	.502,-1	.391,-1
29	.302,-1	.116,-1	.214,-1	.894,-1	.137	.113	.428,-1	.554,-1	.736,-1	.796,-1
30	.140,-1	.161,-1	.365,-1	.848,-1	.598,-1	.980,-1	.410,-1	.331,-1	.400,-1	.405,-1
31	-.183,-1	-.563,-3	-.545,-2	.856,-1	.563,-1	.727,-1	.604,-1	.620,-1	.470,-1	.397,-1
32	.283,-2	.338,-1	.913,-2	.934,-1	.740,-1	.777,-1	.616,-1	.604,-1	.471,-1	.352,-1
33	.291,-1	.372,-3	.504,-1	.482,-1	.709,-1	.902,-1	.602,-1	.241,-1	.332,-1	.700,-1
34	.709,-1	.258,-1	.492,-1	.917,-1	.399,-1	.461,-1	.500,-1	.830,-1	.705,-1	.446,-1
35	.587,-1	.465,-1	.113	.101	.724,-1	.622,-1	.895,-1	.344,-1	.304,-1	.437,-1
36	.241,-1	.693,-1	.492,-1	.252,-1	.401,-1	.706,-1	.452,-1	.213,-1	.394,-1	.557,-1
37	.519,-1	.132,-1	.426,-1	.324,-1	.256,-1	.420,-1	.859,-1	.548,-1	.953,-2	.660,-1
38	.594,-1	.100,-1	.512,-1	.669,-1	.296,-1	.643,-1	.688,-1	.334,-1	.239,-1	.464,-1
39	.343,-1	.440,-1	.410,-1	.455,-1	.325,-1	.539,-1	.566,-1	.283,-1	.113,-1	.718,-1
40	.497,-1	.785,-1	.565,-1	.463,-1	.440,-1	.269,-1	.523,-1	.498,-1	.231,-1	.582,-1
41	.606,-1	.547,-1	.350,-1	.340,-1	.274,-1	.531,-1	.832,-1	.746,-1	.718,-1	.798,-1
42	.168,-2	.725,-1	.297,-1	.205,-1	-.164,-1	.178,-1	.710,-1	.105	.564,-1	.985,-1
43	.281,-1	.420,-1	.602,-1	.704,-1	.105,-1	.453,-1	.963,-1	.122	.104	.769,-1
44	.922,-3	.403,-1	.106,-1	.396,-1	.647,-1	.716,-1	.230,-1	.869,-1	.578,-1	.472,-1
45	.136,-1	-.415,-1	.298	.406,-1	.323,-1	.217,-1	.264,-1	.918,-1	.788,-1	.513,-1
46	.123,-1	.867,-2	-.467,-2	.397,-1	.142,-1	.471,-1	.133,-1	.983,-1	.787,-1	.803,-1
47	.416,-1	.208,-1	-.290,-2	.438,-1	.353,-1	.672,-1	.295,-1	.104	.780,-1	.553,-1
48	-.287,-1	.114,-1	-.512,-1	.477,-1	.346,-1	.407,-1	.356,-1	.146	.122	.578,-1
49	.303,-2	-.163,-1	.136,-1	.504,-1	.125,-1	.512,-2	.910,-1	.107	.126	.120
50	-.142,-1	.333,-1	-.172,-1	.401,-1	.103,-1	.353,-1	.892,-1	.731,-1	.546,-1	.979,-1
51	-.138,-1	-.589,-2	.102,-2	.500,-1	.613,-2	.980,-1	.132	.497,-1	.747,-1	.891,-1
52	-.138,-1	.217,-1	-.161,-1	.298,-1	.419,-1	.412,-1	.147	.872,-1	.774,-1	.768,-1
53	.898,-2	.530,-1	.288,-1	.564,-1	.882,-2	.507,-1	.122	.945,-1	.105	.635,-1
54	-.126,-1	.335,-1	.178,-1	.500,-1	.297,-1	.277,-1	.531,-1	.112	.731,-1	.826,-1
55	.176,-1	.290,-1	.571,-2	.101	.522,-1	.366,-1	.329,-1	.128	.106	.859,-1
56	.225,-1	-.115,-1	.239,-1	.800,-1	.814,-1	.194,-1	.653,-1	.624,-1	.933,-1	.588,-1
57	.636,-1	.371,-1	.637,-1	.117	.706,-1	.746,-1	.948,-1	.124	.107	.824,-1
58	.364,-1	.336,-1	.552,-1	.714,-1	.657,-1	.653,-1	.701,-1	.479,-1	.560,-1	.726,-1
59	.454,-1	.240,-1	.581,-1	.763,-1	.809,-1	.262,-1	.135	.100	.965,-1	.893,-1
60	.701,-1	.267,-1	.701,-1	.545,-1	.316,-1	.132,-1	.145	.106	.120	.116

Run No. 56 ; u component

K	Separation Distance (m.) 1	4	5	16	20	21	64	80	84	85
00	.796	.916,-	.133	.533,-1	.245	.174	.145	.511,-1	.491,-1	.945,-2
01	.593	.771,-	.112	.779,-1	.254	.209	.123	.291,-1	.634,-1	.282,-1
02	.436	.653,-1	.122	.859,-1	.268	.221	.118	.170,-1	.557,-1	.349,-1
03	.356	.646,-1	.916,-1	.744,-1	.245	.211	.129	.213,-1	.390,-1	.305,-1
04	.289	.516,-1	.656,-1	.744,-1	.223	.205	.102	.276,-1	.550,-1	.692,-1
05	.253	.786,-1	.805,-1	.878,-1	.227	.206	.582,-1	.443,-1	.907,-1	.814,-1
06	.233	.820,-1	.820,-1	.101	.214	.190	.182,-1	.344,-1	.131	.118
07	.195	.852,-1	.746,-1	.105	.196	.176	.175,-1	.285,-1	.134	.121
08	.131	.689,-1	.737,-1	.987,-1	.185	.156	.550,-2	.378,-1	.138	.134
09	.984,-1	.795,-1	.889,-1	.105	.167	.132	-.101,-2	.591,-1	.131	.125
10	.794,-1	.808,-1	.965,-1	.107	.157	.136	-.163,-1	.650,-1	.123	.109
11	.599,-1	.780,-1	.853,-1	.109	.105	.128	-.198,-1	.472,-1	.129	.845,-1
12	.574,-1	.730,-1	.918,-1	.120	.105	.114	-.248,-2	.463,-1	.123	.101
13	.715,-1	.697,-1	.906,-1	.112	.867,-1	.102	-.170,-1	.593,-1	.129	.942,-1
14	.590,-1	.812,-1	.735,-1	.104	.850,-1	.921,-1	-.485,-2	.515,-1	.143	.119
15	.452,-1	.637,-1	.578,-1	.106	.742,-1	.850,-1	-.451,-2	.619,-1	.106	.112
16	.387,-1	.400,-1	.405,-1	.904,-1	.696,-1	.895,-1	.222,-1	.437,-1	.955,-1	.946,-1
17	.347,-1	.391,-1	.422,-1	.605,-1	.835,-1	.998,-1	.513,-1	.336,-1	.915,-1	.993,-1
18	.576,-1	.437,-1	.309,-1	.367,-1	.114	.113	.363,-1	.472,-1	.918,-1	.859,-1
19	.565,-1	.563,-1	.282,-1	.581,-1	.101	.983,-1	.449,-1	.617,-1	.113	.100
20	.485,-1	.687,-1	.410,-1	.392,-1	.837,-1	.826,-1	.273,-1	.295,-1	.110	.922,-1
21	.542,-1	.800,-1	.439,-1	.390,-1	.665,-1	.769,-1	.272,-1	.379,-2	.109	.806,-1
22	.281,-1	.758,-1	.264,-1	.423,-1	.696,-1	.898,-1	.213,-1	.947,-2	.102	.668,-1
23	-.262,-2	.849,-1	.437,-1	.489,-1	.768,-1	.889,-1	.191,-1	.199,-1	.863,-1	.622,-1
24	.106,-1	.107	.594,-1	.557,-1	.758,-1	.101	.141,-1	.199,-1	.848,-1	.565,-1
25	.171,-1	.109	.486,-1	.627,-1	.114	.105	.309,-1	.246,-1	.968,-1	.775,-1
26	.263,-1	.128	.580,-1	.652,-1	.143	.130	.493,-1	.258,-1	.100	.860,-1
27	.305,-1	.123	.701,-1	.408,-1	.158	.161	.762,-1	.411,-1	.723,-1	.980,-1
28	.199,-1	.125	.866,-1	.462,-1	.164	.181	.994,-1	.503,-1	.549,-1	.641,-1
29	.196,-1	.107	.933,-1	.426,-1	.146	.154	.106	.545,-1	.598,-1	.760,-1
30	.136,-1	.113	.756,-1	.288,-1	.977,-1	.115	.116	.599,-1	.520,-1	.890,-1
31	.225,-1	.121	.794,-1	.292,-1	.848,-1	.000,-1	.956,-1	.599,-1	.672,-1	.102
32	.327,-1	.123	.671,-1	.405,-1	.810,-1	.922,-1	.876,-1	.534,-1	.549,-1	.777,-1
33	.288,-1	.105	.579,-1	.354,-1	.874,-1	.873,-1	.117	.554,-1	.148,-1	.369,-1
34	.771,-2	.997,-1	.430,-1	.313,-1	.692,-1	.913,-1	.142	.361,-1	.860,-2	.252,-1
35	.132,-1	.930,-1	.391,-1	.736,-2	.395,-1	.703,-1	.153	.385,-1	.436,-1	.489,-1
36	.178,-1	.892,-1	.680,-1	.769,-2	.245,-1	.422,-1	.120	.298,-1	.369,-1	.526,-1
37	.198,-1	.686,-1	.512,-1	.511,-2	.209,-1	.271,-1	.119	.328,-1	.293,-1	.311,-1
38	.752,-2	.934,-1	.766,-1	.232,-1	.127,-1	.210,-1	.105	.452,-1	.139,-2	.215,-1
39	-.486,-2	.930,-1	.625,-1	.216,-1	.283,-1	.141,-1	.787,-1	.443,-1	-.306,-2	.209,-1
40	-.969,-2	.757,-1	.787,-1	.293,-1	.372,-1	.567,-2	.239,-1	.571,-1	.196,-1	.446,-1
41	-.302,-1	.816,-1	.783,-1	.234,-1	.218,-1	-.131,-1	.000,-2	.641,-1	.364,-1	.487,-1
42	-.407,-1	.110	.933,-1	.309,-1	.250,-2	-.859,-2	.107,-1	.422,-1	.113,-1	.342,-1
43	-.229,-1	.097,-1	.926,-1	.614,-1	-.249,-1	-.462,-1	.295,-1	.269,-1	-.257,-1	.292,-2
44	-.340,-1	.664,-1	.848,-1	.434,-1	-.231,-1	-.318,-1	.405,-1	.297,-1	-.304,-1	-.155,-1
45	-.118,-1	.762,-1	.909,-1	.388,-1	-.206,-1	-.357,-1	.457,-1	.397,-1	-.371,-1	-.363,-1
46	-.183,-1	.872,-1	.913,-1	.570,-1	-.297,-1	-.608,-1	.588,-1	.470,-2	-.440,-1	-.434,-1
47	.424,-2	.104	.748,-1	.578,-1	-.504,-1	-.709,-1	.543,-1	-.770,-2	-.614,-1	-.576,-1
48	.229,-1	.100	.762,-1	.398,-1	-.406,-1	-.919,-1	.389,-1	-.379,-1	-.619,-1	-.547,-1
49	.278,-1	.908,-1	.667,-1	.225,-1	-.281,-1	-.724,-1	.232,-1	-.492,-1	-.688,-1	-.663,-1
50	-.164,-1	.928,-1	.645,-1	.356,-1	-.125,-2	-.542,-1	-.406,-3	-.521,-1	-.700,-1	-.676,-1
51	-.192,-1	.989,-1	.586,-1	.466,-1	.148,-1	-.354,-1	.135,-1	-.497,-1	-.414,-1	-.241,-1
52	-.114,-1	.804,-1	.671,-1	.609,-1	-.107,-2	-.251,-1	.440,-1	-.452,-1	-.561,-2	-.231,-2
53	-.814,-1	.810,-1	.669,-1	.803,-1	-.705,-2	-.770,-2	.413,-1	-.272,-1	.126,-3	.337,-1
54	-.564,-3	.747,-1	.735,-1	.881,-1	.932,-2	.350,-1	.529,-1	-.464,-2	.387,-1	.604,-1
55	.110,-1	.693,-1	.674,-1	.918,-1	.411,-1	.715,-1	.821,-1	-.473,-3	.624,-1	.841,-1
56	.486,-2	.388,-1	.428,-1	.665,-1	.367,-1	.791,-1	.859,-1	-.303,-2	.488,-1	.901,-1
57	.185,-1	.349,-1	.301,-1	.698,-1	.281,-1	.723,-1	.632,-1	-.445,-2	.510,-1	.120
58	.423,-1	.319,-1	.377,-1	.710,-1	.841,-2	.454,-1	.483,-1	-.152,-1	.659,-1	.118
59	.686,-1	.242,-1	.492,-1	.635,-1	.576,-2	.600,-1	.529,-1	-.202,-1	.756,-1	.127
60	.696,-1	.246,-1	.476,-1	.631,-1	.295,-1	.687,-1	.751,-1	.131,-1	.668,-1	.112

Run No. 56 ; v component

Separation Distance (m.)

K	1	4	5	16	20	21	64	80	84	85
00	.662	.539	.[illegible]27	.451	.430	.435	.413	.357	.378	.394
01	.615	.486	.490	.430	.432	.430	.416	.358	.364	.382
02	.500	.446	.469	.401	.421	.455	.411	.375	.385	.379
03	.463	.435	.436	.409	.451	.445	.408	.369	.394	.394
04	.442	.401	.416	.412	.443	.433	.448	.374	.435	.409
05	.454	.400	.[illegible]71	.449	.429	.438	.443	.406	.395	.408
06	.404	.[illegible]50	.[illegible]77	.428	.428	.438	.441	.391	.390	.404
07	.382	.379	.382	.396	.413	.429	.440	.377	.390	.397
08	.416	.357	.362	.415	.432	.452	.434	.395	.351	.395
09	.403	.372	.400	.408	.413	.467	.430	.393	.344	.394
10	.403	.378	.397	.413	.439	.442	.436	.345	.375	.394
11	.418	.412	.391	.430	.428	.415	.442	.366	.375	.373
12	.398	.408	.423	.420	.435	.421	.454	.377	.380	.375
13	.338	.386	.398	.419	.442	.411	.457	.361	.365	.374
14	.393	.377	.381	.379	.445	.434	.428	.386	.392	.404
15	.369	.385	.391	.387	.410	.421	.430	.410	.430	.409
16	.357	.395	.391	.394	.413	.416	.412	.403	.392	.425
17	.398	.381	.406	.362	.417	.419	.393	.403	.386	.419
18	.351	.370	.395	.379	.402	.425	.390	.359	.388	.390
19	.374	.357	.383	.426	.392	.404	.392	.388	.369	.372
20	.371	.349	.359	.447	.406	.400	.412	.396	.364	.356
21	.401	.347	.341	.428	.441	.409	.400	.378	.363	.379
22	.360	.378	.356	.429	.427	.440	.384	.338	.361	.398
23	.368	.367	.366	.412	.435	.438	.379	.351	.361	.398
24	.368	.358	.366	.403	.426	.457	.373	.356	.358	.356
25	.385	.375	.367	.433	.427	.458	.359	.362	.367	.358
26	.361	.378	.388	.417	.442	.447	.372	.345	.385	.365
27	.360	.373	.367	.420	.426	.436	.346	.360	.385	.379
28	.377	.385	.383	.402	.452	.441	.336	.368	.393	.384
29	.369	.378	.365	.400	.413	.416	.348	.367	.367	.402
30	.365	.350	.368	.378	.408	.399	.316	.366	.369	.405
31	.347	.366	.355	.375	.392	.419	.370	.333	.351	.360
32	.351	.380	.377	.378	.388	.416	.399	.347	.368	.368
33	.347	.422	.389	.380	.389	.406	.363	.357	.337	.358
34	.367	.358	.415	.389	.372	.379	.345	.355	.329	.332
35	.397	.361	.368	.380	.399	.413	.325	.338	.323	.319
36	.390	.365	.385	.367	.394	.430	.318	.301	.335	.335
37	.386	.350	.368	.385	.400	.420	.325	.311	.343	.349
38	.358	.365	.360	.406	.401	.430	.332	.328	.337	.328
39	.355	.362	.364	.407	.400	.425	.354	.332	.315	.318
40	.357	.328	.367	.405	.375	.404	.343	.325	.341	.347
41	.324	.353	.339	.413	.382	.355	.333	.326	.373	.373
42	.338	.318	.332	.393	.370	.358	.341	.345	.347	.375
43	.318	.318	.313	.352	.358	.365	.344	.336	.341	.351
44	.348	.313	.344	.331	.334	.366	.348	.337	.323	.318
45	.366	.326	.346	.321	.339	.347	.367	.333	.348	.340
46	.362	.368	.334	.353	.362	.350	.367	.364	.349	.345
47	.353	.344	.343	.343	.365	.345	.365	.374	.353	.338
48	.370	.342	.351	.344	.336	.330	.344	.366	.379	.348
49	.335	.356	.349	.341	.347	.354	.343	.356	.342	.364
50	.326	.354	.346	.363	.370	.385	.359	.366	.344	.355
51	.368	.335	.345	.360	.380	.384	.307	.346	.311	.340
52	.324	.325	.353	.369	.381	.398	.278	.379	.358	.326
53	.310	.307	.342	.357	.348	.371	.307	.358	.331	.333
54	.341	.313	.316	.327	.335	.325	.320	.365	.333	.325
55	.308	.312	.308	.310	.304	.289	.337	.361	.327	.340
56	.313	.306	.292	.317	.293	.328	.336	.315	.305	.317
57	.316	.328	.323	.307	.328	.335	.329	.299	.310	.308
58	.302	.320	.378	.325	.336	.333	.330	.318	.278	.275
59	.296	.335	.333	.340	.331	.332	.344	.291	.277	.296
60	.308	.352	.340	.347	.327	.348	.341	.309	.261	.272

Run No. 58 ; u component

Separation Distance (m.)

K	1	4	5	16	20	21	64	80	84	85
00	.170	.474,-1	.749,-1	-.404,-1	-.212,-1	.337,-1	.709,-1	.488,-2	.120	.400,-1
01	.134	.568,-1	.414,-1	-.340,-2	.511,-1	.316,-1	.694,-2	.181,-1	.756,-1	.155,-1
02	.109	.688,-1	.696,-2	-.470,-2	.527,-1	.514,-1	.592,-1	.456,-2	.104	.587,-1
03	.946,-1	.322,-1	.318,-1	-.106,-1	.573,-1	.376,-1	.651,-1	.362,-1	.135	.508,-1
04	.112	.388,-1	.402,-1	-.298,-1	.604,-1	.493,-1	.288,-1	.328,-1	.833,-1	.655,-1
05	.820,-1	.439,-1	.493,-1	-.105,-1	.639,-1	.431,-1	.477,-1	-.107,-1	.343,-1	.104
06	.861,-1	.744,-1	.213,-1	.133,-1	.175,-1	.147,-1	.605,-1	-.105,-1	.553,-1	.974,-1
07	.935,-1	.724,-1	.308,-1	.439,-1	-.114,-1	.490,-1	.361,-1	-.116,-1	.825,-1	.594,-1
08	.105	.441,-1	.572,-1	.258,-1	.532,-2	.559,-1	.302,-1	.559,-2	.891,-1	.222,-1
09	.112	.608,-1	-.735,-2	-.512,-2	.294,-1	.386,-1	.296,-1	-.297,-1	.748,-1	.251,-1
10	.699,-1	.249,-1	.878,-2	-.763,-2	.287,-1	.853,-2	.323,-1	-.441,-1	.853,-1	.410,-1
11	.646,-1	.423,-1	.370,-1	-.230,-2	.239,-2	.496,-1	.224,-1	-.674,-1	.622,-1	.493,-1
12	.638,-1	.408,-1	-.182,-2	-.159,-1	.599,-2	.390,-1	.371,-1	-.612,-1	.810,-1	.627,-1
13	.809,-1	-.660,-2	-.497,-3	-.238,-1	.170,-1	.400,-1	.232,-1	-.246,-1	.337,-1	.901,-1
14	.256,-1	-.539,-2	.406,-1	.198,-1	.646,-2	.437,-1	.125,-1	.137,-2	.729,-1	.583,-1
15	.351,-1	-.148,-1	.754,-1	.265,-1	.479,-1	.149,-1	.160,-1	.277,-1	.672,-1	.480,-1
16	.219,-1	.556,-1	.513,-1	.379,-1	.244,-1	-.429,-1	.371,-1	.357,-1	.549,-1	.358,-1
17	.104,-1	.273,-1	.438,-1	.298,-1	.864,-2	-.308,-1	.711,-1	.465,-1	.571,-1	.576,-1
18	.479,-1	.283,-1	.689,-1	.360,-1	-.934,-2	.154,-1	.979,-1	.388,-2	.782,-1	.773,-1
19	.315,-1	.567,-1	.805,-1	.448,-1	-.105,-1	-.210,-1	.674,-1	.847,-2	.989,-1	.616,-1
20	.341,-1	.648,-1	.913,-1	.219,-1	-.365,-1	-.617,-1	.443,-1	.530,-1	.821,-1	.562,-1
21	.831,-1	.730,-1	.105	.198,-1	-.434,-1	-.440,-1	.224,-1	.732,-1	.457,-1	.524,-1
22	.101	.727,-1	.577,-1	.640,-1	-.538,-2	-.187,-1	.132,-1	.833,-1	.400,-1	.240,-1
23	.685,-1	.756,-1	.298,-1	.494,-1	.108,-1	.841,-2	.513,-2	.358,-1	.541,-1	.408,-1
24	.706,-1	.592,-1	.938,-1	-.494,-1	.340,-1	.121,-1	-.117,-1	-.184,-1	.804,-1	.269,-1
25	.646,-1	.492,-1	.828,-1	-.327,-1	-.320,-1	.478,-2	-.941,-2	.626,-1	.523,-1	.214,-1
26	.448,-1	.325,-1	.537,-1	-.315,-1	-.205,-1	-.360,-1	.529,-1	.437,-1	.652,-1	.867,-2
27	.589,-1	.327,-1	.524,-1	-.929,-2	.184,-1	-.205,-1	.649,-1	.252,-1	.923,-1	.387,-1
28	.265,-1	.172,-1	.613,-2	.128,-3	.119,-1	.489,-2	.181,-1	.809,-2	.620,-1	.584,-1
29	-.213,-1	.199,-1	.581,-2	.278,-1	.271,-1	.143,-2	-.170,-1	.193,-2	.782,-1	.575,-1
30	-.253,-1	.177,-2	.507,-2	.419,-1	-.127,-1	.766,-2	-.200,-1	.202,-1	.748,-1	.357,-1
31	.142,-1	.115,-1	.105,-1	.653,-1	-.112,-1	-.796,-1	.217,-1	.788,-1	.713,-1	-.156,-1
32	.837,-2	.378,-1	.268,-1	.376,-1	.159,-1	-.577,-1	.450,-1	.499,-1	.359,-1	-.267,-1
33	.361,-1	.352,-1	.174,-1	-.176,-1	-.367,-1	-.381,-1	.605,-1	.465,-1	.456,-1	-.246,-1
34	.384,-1	.551,-2	-.230,-2	.945,-2	-.726,-1	-.428,-1	.602,-1	.675,-1	.422,-1	.955,-2
35	.261,-1	.350,-1	.227,-1	.183,-3	-.393,-1	-.139,-1	-.158,-1	.703,-1	.364,-1	-.129,-1
36	.712,-2	-.944,-2	.149,-1	-.329,-1	-.168,-2	-.461,-1	-.347,-1	.768,-1	.428,-1	-.334,-1
37	.326,-1	-.999,-2	-.254,-1	-.676,-3	.182,-1	.631,-2	-.694,-3	.554,-1	.178,-1	.628,-2
38	.811,-1	-.105,-1	-.532,-1	-.528,-1	.254,-1	.587,-1	.480,-1	.285,-1	.433,-2	.284,-1
39	.680,-1	.109,-1	-.169,-1	.229,-1	.352,-1	.236,-1	.698,-1	.761,-1	-.310,-1	.270,-1
40	.614,-1	.752,-1	.339,-1	.168,-1	.623,-2	.625,-1	.166,-1	.104	-.418,-2	.372,-1
41	.240,-1	.541,-1	.667,-1	.319,-1	.826,-1	.748,-1	.463,-1	.572,-1	.674,-1	.215,-1
42	.207,-1	.594,-1	.591,-1	.148,-1	.849,-1	.522,-1	.606,-1	.835,-1	.738,-1	.143,-1
43	.130,-2	.215,-1	-.935,-1	-.208,-1	.352,-1	.229,-1	.346,-1	.818,-1	.576,-1	-.587,-2
44	.716,-2	-.000	.114	-.132,-1	.112,-1	.921,-2	.256,-1	.101	.478,-1	.128,-2
45	.618,-1	.181,-1	.951,-1	.154,-1	.294,-1	-.168,-1	.338,-1	.806,-1	.361,-1	-.113,-2
46	.289,-1	.191,-1	.323,-1	-.389,-1	-.709,-2	-.135,-1	.205,-1	.866,-1	.206,-1	.920,-1
47	.657,-1	.329,-1	.250,-1	-.459,-1	-.814,-2	.867,-2	-.223,-1	.325,-1	.597,-1	.765,-1
48	.118	.478,-1	-.192,-1	-.190,-1	.527,-2	.301,-1	-.795,-1	.237,-1	.742,-1	.503,-1
49	.850,-1	.496,-1	-.315,-2	-.410,-1	-.311,-2	.611,-1	-.535,-1	.425,-1	.758,-1	.553,-2
50	.703,-1	.389,-1	-.111,-1	-.459,-1	.117,-1	.462,-2	-.959,-2	.956,-1	.611,-1	-.107,-1
51	.798,-1	.254,-1	-.477,-2	.413,-2	.127,-1	-.544,-2	.464,-1	.750,-1	-.821,-2	.274,-1
52	.744,-1	.407,-1	.182,-1	.307,-1	.217,-1	.335,-1	.240,-1	.376,-2	.314,-2	.416,-1
53	.517,-1	.243,-1	.439,-1	.431,-2	.305,-1	.666,-1	.505,-1	.469,-1	.416,-1	.101,-1
54	.365,-1	.712,-1	.810,-1	.530,-2	.291,-1	.181,-1	.479,-1	.526,-1	.539,-1	-.302,-2
55	.150,-2	.793,-1	.901,-1	-.137,-1	.408,-1	.296,-1	.696,-1	.279,-1	.590,-1	.244,-1
56	.152,-1	.821,-1	.797,-1	-.313,-1	.601,-1	-.548,-1	.909,-1	.272,-1	.685,-1	.101,-1
57	.217,-3	.509,-1	.754,-1	.242,-1	.184,-1	-.239,-1	.362,-1	.466,-1	.394,-1	.242,-1
58	.191,-1	.681,-1	.765,-1	.318,-1	.138,-1	.246,-2	.119,-1	.343,-1	.421,-1	-.180,-1
59	.284,-2	.520,-1	.374,-1	.148,-1	.134,-2	.253,-1	.161,-1	.377,-1	.730,-1	.143,-1
60	.217,-1	.378,-1	.719,-2	-.235,-1	.133,-1	-.105,-1	-.140,-1	.447,-1	.891,-1	.345,-1

Run No. 58 ; v component

Separation Distance (m.)

K	1	4	5	10	20	21	64	80	84	85
00	.148	.111	.691,-1	.541,-1	.493,-1	-.601,-2	.354,-1	.614,-1	.424,-1	.634,-1
01	.248	.746,-1	.740,-1	-.137,-1	.793,-1	.442,-1	.515,-1	.146,-1	.150,-1	.367,-1
02	.125	.942,-1	.852,-1	.440,-1	.810,-1	.797,-1	.328,-1	-.261,-1	.825,-1	.129,-1
03	.116	.109	.522,-1	.176,-1	.544,-1	.115	.632,-1	-.837,-2	.388,-1	.454,-1
04	.111	.624,-1	.839,-1	.591,-1	.445,-1	.545,-1	-.253,-1	-.162,-2	.572,-1	.379,-1
05	.679,-1	.396,-1	.649,-1	.660,-1	.605,-1	.276,-1	-.234,-1	.277,-1	.619,-1	.254,-1
06	.509,-1	.607,-1	.588,-1	.937,-1	.133	.808,-1	.127,-1	-.130,-1	.459,-1	.128,-2
07	.102	.102	.663,-1	.932,-1	.118	.994,-1	.434,-1	-.675,-2	.695,-1	-.128,-2
08	.912,-1	.854,-1	.402,-1	.345,-1	.796,-1	.106	.236,-1	.274,-1	.620,-1	.150,-1
09	.103	.519,-1	.386,-1	.648,-1	.517,-1	.708,-1	.509,-2	.629,-1	.102,-1	.490,-1
10	.860,-1	.252,-1	.556,-1	.700,-1	.684,-1	.790,-1	.317,-1	.793,-1	.214,-1	.159,-1
11	.114	.491,-1	.472,-1	.581,-1	.338,-1	.463,-1	-.274,-1	.357,-1	.309,-1	.752,-2
12	.752,-1	.458,-1	.504,-1	.597,-1	.468,-1	.395,-1	.107,-1	.421,-1	.465,-1	.750,-1
13	.124	.584,-1	.785,-1	.139,-2	.966,-1	.570,-1	-.204,-1	.201,-1	.664,-1	.478,-1
14	.737,-1	.578,-1	.611,-1	.141,-1	.652,-1	.131	-.547,-1	.504,-1	.771,-1	.502,-1
15	.595,-1	.536,-1	.510,-1	.108,-1	.371,-1	.118	-.346,-1	.286,-1	.168,-1	.815,-1
16	.616,-1	.548,-1	.491,-1	.452,-1	.223,-1	.103	-.398,-1	.461,-1	.781,-1	.254,-1
17	.128	.643,-1	.746,-1	.476,-1	.210,-1	.395,-1	-.267,-1	.756,-1	.246,-1	.448,-1
18	.572,-1	.366,-1	.850,-1	.492,-1	.607,-1	.219,-1	.308,-1	.378,-1	.385,-1	.666,-2
19	.911,-1	.444,-1	.558,-1	.111	.685,-1	.459,-1	.325,-1	.353,-1	.117,-1	.433,-1
20	.127	.315,-1	.892,-1	.719,-1	.422,-1	.889,-1	.452,-1	-.428,-1	.[illegible],-1	.288,-1
21	.134	.933,-1	.826,-1	.586,-1	.350,-1	.541,-1	.398,-1	.118,-1	.[illegible],-1	.469,-1
22	.108	.880,-1	.759,-1	.686,-1	.497,-1	.478,-1	.400,-1	.129,-1	.508,-1	.514,-2
23	.376,-1	.626,-1	.574,-1	.669,-1	.141	.832,-1	.472,-1	.450,-1	.604,-1	.795,-1
24	.138	.587,-1	.267,-1	.672,-1	.812,-1	.895,-1	.481,-1	-.259,-1	-.111,-1	.523,-1
25	.149	.329,-1	.483,-1	.568,-1	.311,-1	.789,-1	.671,-1	-.198,-1	.187,-1	.457,-1
26	.853,-1	.572,-1	.350,-1	.102	.490,-1	.946,-1	.729,-1	.233,-1	.487,-1	.477,-1
27	.317,-1	.150	.919,-1	.616,-1	.517,-1	.921,-1	.427,-1	.365,-1	.275,-1	.192,-1
28	.906,-1	.884,-1	.138	.881,-1	-.489,-2	.388,-1	.325,-1	.287,-1	.519,-1	.610,-1
29	.105	.644,-1	.570,-1	.450,-1	.723,-2	.646,-2	.139,-1	.356,-1	.282,-1	.123,-1
30	.914,-1	.444,-1	.911,-1	.381,-2	-.115,-1	.599,-1	-.263,-1	.661,-1	.858,-1	.587,-1
31	.111	.601,-1	.776,-1	.220,-1	.461,-1	.285,-1	-.310,-1	.392,-1	.261,-1	.467,-1
32	.879,-1	.617,-1	.715,-1	.336,-1	.434,-1	.484,-1	-.834,-2	.702,-2	.545,-1	.809,-1
33	.920,-1	.176,-1	.753,-1	.139,-1	.307,-1	-.185,-1	.124,-1	.136,-1	.432,-1	.533,-1
34	.928,-1	.670,-2	.877,-1	.367,-1	.544,-1	-.117,-1	-.136,-2	.542,-1	.401,-1	.191,-1
35	.753,-1	-.389,-2	.369,-1	.124,-1	.280,-1	.402,-1	.581,-1	.427,-1	.188,-1	-.165,-1
36	.679,-1	.322,-1	.542,-1	.751,-1	.170,-1	.518,-2	.662,-1	-.216,-2	.314,-1	.432,-2
37	.700,-1	.548,-1	.143,-1	.330,-1	.254,-1	.404,-1	.377,-1	.163,-1	.965,-1	.477,-1
38	.135,-1	.458,-1	.388,-1	.683,-1	.131,-1	.371,-1	.673,-1	.885,-1	.533,-1	.178,-1
39	.452,-1	.598,-1	.448,-1	.430,-1	.444,-1	.515,-1	.606,-1	.443,-1	.906,-1	.589,-1
40	.129	.325,-1	.963,-1	.394,-1	.147,-1	.176,-1	.134,-1	.216,-1	.111	.510,-1
41	.949,-1	.259,-1	.458,-1	.353,-1	-.228,-1	-.197,-1	.179,-1	.667,-1	.101	.822,-1
42	.148	.342,-1	.465,-1	.710,-1	-.264,-1	-.181,-1	.697,-1	.284,-1	.554,-1	.110
43	.706,-1	.380,-1	.520,-1	.649,-1	.293,-1	.255,-1	.581,-1	.351,-3	.543,-1	.178,-1
44	.933,-1	.477,-1	.123	.516,-1	.266,-1	.311,-1	.179,-1	.351,-2	.436,-1	.441,-1
45	.108	.559,-1	.660,-1	.656,-1	.268,-1	.464,-1	-.198,-1	.551,-1	.287,-1	.643,-1
46	.117	.863,-1	.737,-1	.271,-1	.299,-1	.214,-1	.292,-1	.496,-1	.741,-1	.332,-1
47	.763,-1	.817,-1	.152	-.121,-1	.547,-1	.361,-1	.194,-1	.795,-1	.412,-1	.685,-1
48	.130	.635,-1	.158	.467,-1	.455,-1	.491,-1	.357,-1	.849,-1	.927,-2	.555,-1
49	.106	.709,-1	.955,-1	.558,-1	-.385,-2	.558,-1	.546,-1	.583,-1	.363,-1	.260,-1
50	.102	.508,-1	.117	.736,-1	.801,-2	.411,-1	.975,-1	.143,-1	.413,-1	.505,-1
51	.646,-1	.978,-1	.678,-1	.549,-1	.427,-1	.347,-1	.836,-1	-.128,-2	.372,-1	.509,-1
52	.897,-1	.986,-1	.468,-1	.656,-1	.748,-1	.491,-1	.542,-1	.691,-2	.748,-1	.778,-1
53	.103	.507,-1	.366,-1	.816,-1	.731,-1	.579,-1	.517,-1	.205,-1	.540,-1	.904,-1
54	.105	.804,-1	.141,-1	.246,-1	.665,-1	.980,-1	.615,-1	.321,-2	-.815,-2	.658,-1
55	.753,-1	.306,-1	.386,-1	.504,-1	.216,-1	.545,-1	.437,-1	-.242,-1	.214,-1	.711,-1
56	.433,-1	.631,-1	.904,-1	.147,-1	.555,-1	.600,-1	.215,-1	.355,-1	.701,-1	.987,-1
57	.459,-1	.206,-1	.443,-1	.311,-1	.262,-1	.222,-2	.408,-1	.206,-1	.958,-1	.128
58	.987,-1	.109,-1	.175,-1	-.255,-1	-.801,-2	.286,-1	.556,-1	.526,-1	.377,-1	.386,-1
59	.502,-1	.662,-1	.525,-1	-.326,-1	-.182,-1	.175,-1	.683,-1	.220,-1	.747,-1	.358,-1
60	.119	.327,-1	.394,-1	-.531,-2	-.143,-1	.487,-1	.495,-1	.198,-1	.880,-1	-.780,-2

Run No. 59 ; u component

Separation Distance (m.)

K	1	4	5	16	20	21	64	80	84	85
00	.944	.946,-2	.122,-1	.818,-1	.356,-1	.921,-1	.117	.453,-1	.892,-2	-.359,-1
01	.324	.198,-1	-.191,-1	.115	.412,-1	.606,-1	.884,-1	.542,-1	.636,-1	-.265,-1
02	.251	.326,-1	.129,-2	.867,-1	.720,-1	.631,-1	.736,-1	.630,-1	.286,-1	-.214,-2
03	.163	.449,-1	.205,-1	.653,-1	.107	.953,-1	.832,-1	.101	.330,-1	-.936,-2
04	.121	.493,-1	.300,-1	.647,-1	.129	.109	.545,-1	.115	.508,-1	-.467,-2
05	.757,-1	.640,-1	.647,-1	.51[illegible],-1	.114	.123	.554,-1	.885,-1	.505,-1	.744,-2
06	.386,-1	.792,-1	.615,-1	.772,-1	.869,-1	.106	.540,-1	.975,-1	.413,-1	.116,-1
07	.716,-1	.835,-1	.237,-1	.596,-1	.806,-1	.106	.833,-2	.678,-1	.330,-1	-.130,-1
08	.579,-1	.791,-1	.157,-1	.359,-1	.830,-1	.931,-1	.198,-1	.291,-1	.523,-1	.113,-1
09	.522,-1	.777,-1	.391,-1	.619,-1	.549,-1	.942,-1	.846,-2	.108,-1	.708,-1	.262,-1
10	.610,-1	.633,-1	.826,-1	.248,-1	.336,-1	.627,-1	.311,-1	.493,-1	.712,-1	.436,-1
11	.850,-1	.580,-1	.594,-1	.611,-2	.411,-1	.656,-1	.289,-1	.205,-1	.627,-1	.595,-1
12	.739,-1	.611,-1	.599,-1	.238,-1	.487,-1	.571,-1	.265,-1	.348,-1	.509,-1	.251,-1
13	.629,-1	.434,-1	.424,-1	-.797,-2	.474,-1	.647,-1	.512,-1	.384,-1	.266,-1	.150,-1
14	.574,-1	.279,-1	.317,-1	.194,-1	.605,-1	.103	.986,-1	.457,-1	.159,-2	.642,-2
15	.618,-1	.372,-1	.294,-1	.530,-1	.342,-1	.955,-1	.720,-1	.470,-1	-.209,-1	-.224,-1
16	.817,-1	.232,-1	.119,-1	.773,-1	.530,-1	.716,-1	.610,-1	.655,-1	-.714,-1	-.367,-1
17	.797,-1	.120,-1	.340,-1	.851,-1	.977,-1	.880,-1	.510,-1	.341,-1	-.533,-1	-.393,-1
18	.578,-1	.243,-1	.191,-1	.118	.123	.349,-1	.285,-1	.410,-1	-.709,-2	-.650,-1
19	.611,-1	.247,-1	-.150,-2	.657,-1	.117	.326,-1	.435,-1	.272,-1	.201,-1	-.336,-1
20	.643,-1	.489,-1	.204,-2	.459,-1	.101	.450,-1	.365,-1	.364,-1	.475,-1	-.681,-2
21	.426,-1	.686,-1	.130,-1	.800,-1	.119	.791,-1	.123,-1	.686,-1	.654,-1	.576,-2
22	.327,-1	.450,-1	.432,-1	.724,-1	.125	.943,-1	-.409,-2	.429,-1	.868,-1	.184,-1
23	.464,-1	.733,-1	.401,-1	.691,-1	.121	.695,-1	.211,-1	.401,-1	.110	.120,-1
24	.861,-1	.106	.585,-1	.703,-1	.927,-1	.788,-1	.358,-1	.467,-1	.797,-1	.212,-1
25	.108	.979,-1	.502,-1	.509,-1	.960,-1	.970,-1	.880,-1	.405,-1	.852,-1	.610,-2
26	.122	.998,-1	.314,-1	.651,-1	.107	.996,-1	.881,-1	.567,-2	.101	.240,-1
27	.134	.839,-1	.306,-1	.663,-1	.995,-1	.880,-1	.675,-1	-.753,-2	.115	.570,-1
28	.112	.777,-1	.550,-1	.405,-1	.951,-1	.573,-1	.865,-1	-.787,-2	.110	.639,-1
29	.968,-1	.680,-1	.242,-1	.453,-1	.943,-1	.521,-1	.823,-1	.146,-1	.844,-1	.383,-1
30	.107	.646,-1	.281,-1	-.462,-2	.116	.533,-1	.117	.932,-2	.856,-1	.615,-1
31	.112	.680,-1	.300,-1	.491,-2	.108	.620,-1	.119	-.768,-2	.789,-1	.697,-1
32	.112	.594,-1	.585,-1	.462,-1	.124	.691,-1	.137	-.201,-1	.249,-1	.706,-1
33	.106	.729,-1	.630,-1	.737,-1	.128	.525,-1	.951,-1	-.435,-1	.278,-1	.310,-1
34	.119	.761,-1	.509,-1	.591,-1	.109	.327,-1	.454,-1	-.948,-2	.755,-1	.268,-1
35	.110	.752,-1	.347,-1	.555,-1	.926,-1	.178,-1	-.641,-2	-.434,-2	.805,-1	.592,-1
36	.105	.926,-1	.292,-1	.221,-1	.740,-1	-.127,-1	-.393,-2	-.121,-1	.816,-1	.402,-1
37	.121	.831,-1	.397,-1	.334,-1	.430,-1	-.260,-1	.521,-2	-.503,-1	.717,-1	-.974,-2
38	.117	.998,-1	.416,-1	.394,-1	.301,-1	-.415,-1	.375,-1	-.131,-1	.300,-1	.467,-3
39	.880,-1	.104	.190,-1	.735,-2	.575,-1	-.482,-1	.416,-1	.363,-2	.256,-2	-.169,-1
40	.113	.124	-.156,-1	.783,-2	.573,-1	-.600,-1	.296,-1	-.912,-2	-.140,-1	-.398,-1
41	.114	.860,-1	-.516,-2	.387,-1	.580,-1	-.705,-1	.370,-1	.279,-1	-.250,-1	-.282,-1
42	.729,-1	.983,-1	.440,-1	.376,-1	.740,-1	-.971,-1	.799,-1	.205,-1	.672,-2	-.776,-2
43	.409,-1	.757,-1	.356,-1	.166,-1	.105	-.634,-1	.409,-1	-.275,-2	.500,-1	-.701,-1
44	.376,-1	.518,-1	.502,-1	.106,-1	.838,-1	-.207,-1	.403,-1	-.130,-1	.292,-1	-.300,-1
45	.222,-1	.769,-1	.218,-1	.907,-2	.774,-1	-.648,-2	.377,-2	-.222,-1	.330,-1	-.183,-1
46	.555,-2	.607,-1	.172,-1	.140,-1	.674,-1	.035,-2	-.194,-1	-.611,-2	.708,-1	-.295,-1
47	-.838,-2	.794,-1	.116,-1	.345,-1	.619,-1	.236,-1	-.116,-1	-.256,-1	.838,-1	.231,-1
48	-.168,-1	.579,-1	-.869,-2	-.102,-1	.372,-1	.393,-2	.521,-2	-.323,-1	.852,-1	-.380,-2
49	.238,-1	.809,-1	.255,-1	.934,-2	.843,-2	.275,-1	-.212,-1	-.700,-2	.517,-1	-.162,-1
50	.204,-1	.629,-1	.221,-1	-.330,-2	.391,-2	.473,-2	-.142,-1	-.223,-1	.581,-1	-.228,-1
51	.518,-1	.875,-1	.235,-1	.611,-2	.154,-1	-.170,-1	.690,-2	-.175,-1	.718,-1	.871,-2
52	.491,-1	.125	.672,-2	.224,-1	.333,-1	-.334,-1	-.459,-2	-.177,-2	.708,-1	.107,-1
53	.137,-1	.932,-1	.950,-2	.284,-1	.151,-1	-.319,-1	.148,-1	-.726,-2	.282,-1	.840,-2
54	.205,-1	.385,-1	-.672,-2	.495,-1	.305,-1	-.719,-2	.465,-2	.289,-1	.503,-1	-.692,-2
55	.189,-1	.208,-1	-.353,-2	.458,-1	.201,-1	-.172,-2	.168,-2	.280,-1	.734,-1	.475,-2
56	-.302,-1	.194,-1	-.197,-1	.114,-1	.361,-1	-.430,-2	-.154,-1	-.136,-1	.646,-1	.324,-1
57	-.508,-1	.275,-1	-.368,-1	-.646,-2	.630,-1	-.706,-2	-.354,-1	-.209,-1	.644,-1	.254,-1
58	-.550,-1	.614,-1	-.568,-1	-.283,-1	.486,-1	-.332,-2	-.228,-1	-.295,-1	.538,-1	.485,-1
59	-.399,-1	.507,-1	-.306,-1	-.220,-1	.323,-1	.398,-1	-.378 -	.974,-3	.104	.467,-1
60	-.115,-1	.714,-1	-.252,-2	-.207,-1	.343,-1	.464,-1	-.571,-1	.107,-1	.105	.632,-1

Run No. 59 ; v component

	Separation Distance (m.)									
K	1	4	5	16	20	21	64	80	84	85
00	.208	.735,-1	.386,-1	.737,-1	.568,-1	.256,-1	.101	.219,-1	.531,-1	.445,-1
01	.705,-1	.609,-1	.557,-1	.743,-1	.739,-1	-.907,-2	.906,-1	.917,-2	.585,-1	.355,-1
02	-.125,-1	.490,-1	.984,-2	.949,-1	.620,-1	.564,-1	.120	.112,-1	.375,-1	.210,-1
03	-.371,-2	.358,-1	-.163,-1	.119	.780,-1	.563,-1	.972,-1	.388,-1	.379,-1	-.142,-1
04	.382,-1	-.000	.150,-1	.107	.304,-1	.564,-1	.679,-1	.188,-1	.178,-1	-.184,-1
05	.655,-1	.504,-1	.561,-1	.106	.148,-1	.475,-1	.337,-1	.167,-1	.111,-1	-.733,-2
06	.615,-1	.633,-1	.822,-1	.918,-1	.318,-1	.133,-1	.300,-1	.261,-1	-.932,-2	-.376,-2
07	.637,-1	.690,-1	.827,-1	.789,-1	.181,-1	.339,-1	.769,-1	.263,-1	-.183,-1	-.941,-2
08	.106	.617,-1	.546,-1	.452,-1	.174,-2	.280,-1	.623,-1	.512,-1	.446,-2	.287,-1
09	.838,-1	.832,-1	.315,-2	.117,-1	.969,-2	.644,-1	.410,-1	.518,-1	.537,-1	.596,-1
10	.717,-1	.723,-1	.140,-1	-.681,-2	-.169,-1	.422,-1	.185,-2	.122,-1	.136,-1	.657,-1
11	.614,-1	.462,-1	-.336,-1	.973,-3	-.426,-1	.494,-1	.704,-2	.193,-1	.257,-1	.985,-1
12	.598,-1	.261,-1	-.273,-2	.299,-1	.373,-2	.239,-3	.446,-1	.240,-1	.363,-1	.111
13	.181,-1	.484,-1	.341,-1	.360,-1	.193,-1	.182,-1	.778,-1	.771,-2	.512,-1	.945,-1
14	.450,-1	.687,-1	.458,-1	.224,-1	.298,-1	.460,-1	.752,-1	.339,-1	.455,-1	.446,-1
15	.645,-1	.576,-1	.142,-1	.129,-1	.422,-2	.387,-1	.779,-1	.420,-1	.242,-1	.101,-1
16	.880,-1	.512,-1	.461,-1	-.311,-1	-.102,-1	.181,-1	.803,-1	.582,-1	.330,-1	.431,-1
17	.672,-1	.757,-1	.525,-1	-.340,-1	-.296,-1	-.198,-1	.115	.562,-1	.284,-1	.128,-1
18	.345,-1	.236,-1	.784,-1	.397,-1	.820,-2	.601,-1	.978,-1	.799,-1	.168,-1	-.257,-2
19	.525,-1	.157,-1	.675,-1	.605,-2	-.137,-2	.626,-1	.926,-1	.129	-.736,-2	.185,-1
20	.465,-1	.627,-2	.527,-1	.386,-1	.522,-2	.339,-1	.127	.157	.521,-1	.395,-1
21	-.751,-2	.987,-1	.640,-1	.524,-1	-.430,-1	.432,-1	.859,-1	.981,-1	.611,-1	.345,-1
22	-.181,-1	.821,-1	.749,-1	.985,-1	-.308,-1	.622,-1	.948,-1	.709,-1	.410,-1	.221,-1
23	-.159,-1	.203,-1	.538,-1	.549,-1	-.596,-1	.490,-2	.111	.797,-1	.472,-1	.350,-2
24	.222,-1	.483,-1	.597,-1	.919,-1	-.101	-.176,-1	.124	.784,-1	.512,-1	.370,-1
25	.729,-1	.842,-1	.687,-1	.800,-1	-.577,-1	.161,-1	.668,-1	.981,-1	.331,-1	.262,-1
26	.743,-1	.893,-1	.338,-1	.717,-1	-.368,-1	-.129,-1	.827,-1	.140	.248,-1	-.147,-1
27	.604,-1	.254,-1	.815,-2	.325,-1	.174,-2	.548,-1	.550,-1	.142	.236,-1	-.130,-2
28	.683,-1	-.486,-2	-.441,-2	-.132,-1	.373,-3	.747,-1	.954,-1	.114	.383,-1	.114,-1
29	.552,-1	-.416,-1	-.187,-1	.120,-1	.262,-1	.530,-1	.650,-1	.124	.269,-1	.382,-1
30	.384,-1	-.102,-1	-.379,-2	-.332,-1	-.621,-2	.347,-1	.551,-1	.117	-.168,-1	.140,-1
31	.862,-2	-.429,-1	.160,-1	-.601,-1	.123,-1	.409,-1	.700,-1	.101	-.265,-1	-.211,-1
32	-.126,-1	.151,-1	.437,-1	-.231,-1	-.106,-1	.591,-1	.732,-1	.857,-1	.756,-2	.170,-1
33	.339,-2	.131,-1	.712,-1	.275,-1	-.584,-2	-.371,-2	.747,-1	.367,-1	.333,-1	.642,-1
34	.302,-1	-.613,-2	.367,-1	.511,-1	.225,-1	.143,-2	.676,-1	.182,-1	.115,-1	.437,-1
35	.565,-1	-.176,-1	.195,-1	.802,-1	-.534,-2	-.429,-1	.805,-1	.247,-2	-.227,-1	.191,-1
36	.841,-1	-.481,-1	.887,-3	.353,-1	-.212,-1	-.452,-1	.741,-1	-.235,-1	-.281,-1	-.226,-1
37	.921,-1	-.436,-2	.668,-1	.365,-1	.289,-1	-.137,-1	.807,-2	-.500,-1	-.316,-1	.257,-1
38	.680,-1	.126,-1	.476,-1	.421,-1	.402,-1	-.371,-2	.131,-1	-.571,-1	-.443,-1	.132,-1
39	.516,-1	.848,-2	.182,-1	.979,-1	-.398,-2	-.154,-1	.466,-1	-.496,-1	-.311,-1	.610,-2
40	.582,-1	.211,-1	.863,-2	.302,-1	-.295,-1	-.136,-2	.281,-1	-.150,-1	-.343,-1	-.127,-1
41	.395,-1	.259,-1	.154,-1	.200,-1	-.438,-1	-.847,-2	.609,-3	.141,-1	-.354,-1	-.247,-1
42	.196,-1	.473,-1	.223,-1	-.584,-2	-.662,-1	-.200,-1	-.308,-1	.582,-1	-.307,-1	-.469,-3
43	-.117,-1	.300,-1	-.123,-1	-.000	-.176,-1	-.872,-2	-.197,-1	.451,-1	-.134,-1	-.345,-1
44	.118,-1	.411,-2	-.465,-1	.335,-2	.385,-2	.550,-1	.117,-1	.305,-1	-.496,-1	-.200,-1
45	.413,-1	-.207,-1	-.230,-1	.403,-1	.360,-1	.437,-1	.311,-1	.165,-1	-.068,-1	-.321,-1
46	.151,-1	-.348,-1	-.292,-1	.150,-1	-.534,-2	.509,-1	.713,-2	.609,-2	-.511,-1	.357,-3
47	.807,-1	-.680,-2	-.242,-2	.451,-1	.311,-2	.505,-1	.138,-1	.116,-1	-.217,-1	.106,-1
48	-.904,-2	-.618,-2	-.314,-1	.318,-1	.683,-2	-.289,-1	-.463,-2	.468,-1	-.124,-1	.143,-2
49	.693,-1	-.184,-1	-.168,-1	.462,-1	-.350,-2	-.907,-2	-.140,-1	.462,-1	-.161,-1	-.409,-2
50	.741,-1	-.345,-1	-.887,-2	.512,-1	-.151,-1	-.146,-1	.165,-1	.431,-1	.151,-1	-.129,-1
51	.409,-1	-.286,-1	-.169,-2	.454,-1	-.309,-1	-.399,-1	.418,-1	.529,-1	.371,-1	.315,-2
52	.237,-1	-.394,-1	-.165,-1	.299,-1	-.291,-1	-.263,-1	.464,-1	.596,-1	.190,-1	-.476,-2
53	.369,-1	-.601,-1	-.498,-1	.128,-1	-.459,-1	-.303,-1	.443,-1	.727,-1	-.320,-1	-.158,-1
54	.536,-1	-.943,-1	-.543,-1	.319,-1	-.161,-2	.287,-1	.374,-1	.811,-1	-.696,-1	-.870,-2
55	.377,-1	-.520,-1	-.413,-1	.665,-1	.101,-1	.525,-1	.241,-1	.853,-1	-.713,-1	-.104,-2
56	.862,-2	-.277,-1	-.484,-1	.843,-2	-.932,-2	.523,-2	.493,-1	.713,-1	-.477,-1	.185,-1
57	-.805,-2	-.163,-1	-.499,-1	-.203,-1	-.611,-1	-.129,-1	.241,-1	.686,-1	-.103,-1	.226,-1
58	.200,-1	.492,-1	.111,-1	.592,-2	-.451,-1	-.997,-1	.314,-1	.658,-1	.117,-1	.332,-1
59	.298,-1	.534,-1	.526,-1	.292,-1	-.446,-1	-.267,-1	.689,-2	.402,-1	-.226,-1	.258,-1
60	-.250,-2	.379,-1	.424,-1	-.735,-2	-.207,-1	-.297,-1	-.261,-3	-.255,-1	-.458,-1	.759,-2

Run No. 60 ; u component

	Separation Distance (m.)									
K	1	4	5	16	20	21	64	80	84	85
00	.765	.645,-1	.545,-1	.102	.305	.192	.283,-1	.141	.129	.129
01	.639	.393,-1	.612,-1	.114	.304	.213	.413,-1	.105	.116	.113
02	.481	.296,-1	.565,-1	.128	.297	.217	.806,-1	.949,-1	.135	.113
03	.411	.316,-1	.624,-1	.124	.261	.200	.989,-1	.858,-1	.135	.124
04	.372	.439,-1	.629,-1	.133	.205	.181	.105	.690,-1	.136	.123
05	.320	.476,-1	.532,-1	.147	.165	.172	.999,-1	.541,-1	.126	.114
06	.263	.284,-1	.350,-1	.150	.160	.159	.891,-1	.510,-1	.105	.905,-1
07	.234	.299,-1	.443,-1	.151	.146	.133	.827,-1	.513,-1	.108	.850,-1
08	.223	.410,-1	.600,-1	.154	.129	.113	.996,-1	.795,-1	.110	.668,-1
09	.197	.372,-1	.494,-1	.138	.145	.138	.128	.953,-1	.115	.836,-1
10	.180	.359,-1	.511,-1	.114	.154	.146	.132	.113	.109	.856,-1
11	.154	.607,-1	.341,-1	.101	.143	.153	.123	.114	.973,-1	.893,-1
12	.134	.584,-1	.371,-1	.850,-1	.132	.154	.124	.126	.951,-1	.958,-1
13	.141	.534,-1	.350,-1	.110	.112	.138	.101	.121	.744,-1	.620,-1
14	.119	.437,-1	.245,-1	.125	.254,-1	.127	.833,-1	.102	.600,-1	.453,-1
15	.952,-1	.466,-1	.207,-1	.122	.106	.123	.486,-1	.754,-1	.537,-1	.442,-1
16	.701,-1	.786,-1	.347,-1	.117	.763,-1	.122	.280,-1	.677,-1	.371,-1	.505,-1
17	.667,-1	.836,-1	.468,-1	.112	.946,-1	.143	.214,-1	.598,-1	.552,-1	.798,-1
18	.667,-1	.108	.668,-1	.828,-1	.101	.126	.160,-2	.712,-1	.235,-1	.774,-1
19	.600,-1	.827,-1	.725,-1	.746,-1	.896,-1	.938,-1	-.274,-1	.698,-1	.140,-1	.417,-1
20	.696,-1	.758,-1	.689,-1	.609,-1	.775,-1	.847,-1	-.413,-1	.529,-1	.129,-2	.174,-1
21	.619,-1	.894,-1	.104	.655,-1	.952,-1	.700,-1	-.561,-1	.340,-1	-.544,-2	-.126,-1
22	.510,-1	.915,-1	.933,-1	.628,-1	.973,-1	.913,-1	-.587,-1	.204,-1	-.255,-1	-.317,-1
23	.471,-1	.110	.825,-1	.563,-1	.108	.105	-.392,-1	.549,-1	-.398,-1	-.569,-1
24	.772,-1	.147	.885,-1	.590,-1	.107	.879,-1	-.302,-1	.720,-1	-.533,-1	-.582,-1
25	.898,-1	.147	.118	.539,-1	.985,-1	.735,-1	-.113,-1	.599,-1	-.600,-1	-.617,-1
26	.107	.110	.113	.706,-1	.992,-1	.888,-1	-.464,-1	.550,-1	-.413,-1	-.366,-1
27	.120	.927,-1	.112	.637,-1	.123	.866,-1	-.748,-1	.458,-1	-.342,-1	-.125,-1
28	.121	.862,-1	.938,-1	.493,-1	.128	.105	-.105	.218,-1	-.241,-1	-.121,-1
29	.123	.104	.110	.346,-1	.117	.932,-1	-.798,-1	-.104,-1	-.116,-1	-.105,-1
30	.124	.106	.106	.261,-1	.112	.973,-1	-.498,-1	.396,-2	-.716,-2	-.429,-2
31	.106	.113	.111	.385,-1	.889,-1	.610,-1	-.504,-1	.309,-1	716,-2	.122,-1
32	.822,-1	.920,-1	.957,-1	.315,-1	.605,-1	.324,-1	-.416,-1	.507,-1	.268,-1	.196,-1
33	.675,-1	.764,-1	.731,-1	.616,-1	.318,-1	.151,-2	-.327,-1	.586,-1	.311,-1	.207,-1
34	.604,-1	.612,-1	.709,-1	.695,-1	.210,-1	.925,-2	-.259,-1	.405,-1	.322,-1	.258,-1
35	.561,-1	.558,-1	.102	.777,-1	.440,-1	.467,-1	-.233,-2	.247,-1	.450,-1	.440,-1
36	.583,-1	.517,-1	.117	.729,-1	.506,-1	.659,-1	-.246,-3	.203,-1	.642,-1	.393,-1
37	.480,-1	.668,-1	.112	.706,-1	.946,-1	.810,-1	.134,-1	.303,-1	.736,-1	.331,-1
38	.373,-1	.589,-1	.919,-1	.953,-1	.117	.913,-1	.211,-1	.407,-1	.758,-1	.570,-1
39	.622,-1	.583,-1	.588,-1	.101	.140	.106	.435,-1	.312,-1	.968,-1	.728,-1
40	.905,-1	.667,-1	.675,-1	.101	.146	.107	.786,-1	.138,-1	.137	.114
41	.933,-1	.951,-1	.869,-1	.105	.125	.102	.842,-1	.186,-1	.143	.134
42	.543,-1	.957,-1	.104	.124	.111	.106	.940,-1	.225,-1	.146	.126
43	.561,-1	.815,-1	.935,-1	.134	.961,-1	.958,-1	.101	.451,-1	.149	.112
44	.507,-1	.362,-1	.449,-1	.112	.842,-1	.952,-1	.123	.568,-1	.158	.974,-1
45	.562,-1	.221,-1	.240,-1	.879,-1	.827,-1	.723,-1	.150	.339,-1	.134	.961,-1
46	.211,-1	.429,-1	.356,-1	.905,-1	.743,-1	.564,-1	.157	.105,-1	.108	.890,-1
47	-.222,-3	.691,-1	.333,-1	.906,-1	.745,-1	.515,-1	.145	.907,-5	.111	.903,-1
48	-.151,-2	.825,-1	.720,-1	.969,-1	.411,-1	.395,-1	.131	.934,-2	.125	.970,-1
49	-.369,-2	.842,-1	.771,-1	.117	.363,-1	.219,-1	.151	.167,-1	.136	.117
50	-.274,-1	.108	.904,-1	.104	.646,-1	.399,-1	.159	.440,-1	.143	.130
51	-.606,-1	.136	.145	.954,-1	.868,-1	.647,-1	.132	.609,-1	.138	.138
52	-.656,-1	.143	.151	.116	.701,-1	.471,-1	.851,-1	.814,-1	.135	.162
53	-.268,-1	.135	.128	.125	.421,-1	.489,-1	.634,-1	.773,-1	.150	.176
54	.249,-2	.114	.127	.124	.419,-1	.303,-1	.731,-1	.755,-1	.153	.158
55	-.185,-1	.779,-1	.845,-1	.145	.381,-1	.337,-1	.933,-1	.485,-1	.150	.151
56	-.485,-1	.607,-1	.849,-1	.138	.305,-1	.256,-1	.959,-1	.355,-1	.126	.1
57	-.354,-1	.736,-1	.111	.149	.507,-1	.541,-1	.105	.168,-1	.120	.102
58	.431,-3	.821,-1	.951,-1	.134	.390,-1	.629,-1	.114	.230,-1	.115	.107
59	.290,-1	.593,-1	.656,-1	.107	.259,-1	.641,-1	.142	.320,-1	.135	.119
60	.426,-1	.629,-1	.560,-1	.674,-1	.245,-1	.614,-1	.145	.340,-1	.135	.129

Run No. 60 ; v component

Separation Distance (m.)

K	1	4	5	16	20	21	64	80	84	85
00	.272	.893,-1	.116	.156,-1	.447,-2	.463,-2	.449,-1	.237,-1	.230,-1	.121,-1
01	.244	.656,-1	.110	.344,-1	.249,-1	-.434,-1	.523,-2	.156,-1	.104,-2	.469,-1
02	.160	.693,-1	.747,-1	.479,-1	.266,-1	-.866,-2	.322,-1	.419,-1	.105,-1	.336,-1
03	.150	.569,-1	.108	.451,-1	-.808,-2	.144,-1	.459,-1	.222,-1	.106,-1	.329,-1
04	.113	.774,-1	[illegible]	.640,-1	.170,-1	.230,-2	.299,-1	.379,-1	-.127,-1	.752,-1
05	.707,-1	.845,-1	.110	.517,-1	.636,-1	.417,-1	.188,-1	.660,-1	-.415,-2	.139,-1
06	.595,-1	.499,-1	.675,-1	.501,-1	.526,-1	.246,-1	-.259,-1	.545,-1	.494,-1	.111,-1
07	.664,-1	.571,-1	.776,-1	.930,-1	.425,-1	.416,-1	-.698,-1	.427,-1	.431,-1	.613,-1
08	.964,-1	.601,-1	.571,-1	.132	-.166,-1	.512,-1	-.631,-1	.508,-1	.274,-1	.842,-1
09	.923,-1	.263,-1	.574,-1	.142	.147,-1	-.804,-3	-.119,-1	.470,-1	-.242,-1	.469,-1
10	.674,-1	.515,-1	.291,-2	.989,-1	.448,-1	.338,-1	-.749,-1	.415,-1	.124,-1	.729,-1
11	.559,-1	.415,-1	.104	.640,-1	.239,-1	.495,-1	-.315,-1	.629,-1	.155,-1	.102
12	.681,-1	.614,-1	.450,-1	.594,-1	.646,-1	.830,-1	-.756,-1	.291,-1	.196,-1	.134,-1
13	.793,-1	.683,-1	.538,-1	.502,-1	.332,-1	.391,-1	-.209,-1	.468,-1	.467,-1	.567,-1
14	.522,-1	.181,-1	.757,-1	.442,-1	.188,-1	.327,-1	.175,-1	.315,-1	.523,-1	.386,-1
15	.412,-1	.440,-2	.433,-1	.181,-1	-.127,-2	.786,-1	.672,-2	.209,-1	.881,-1	.405,-1
16	.130,-1	.441,-1	.799,-1	.524,-1	.363,-1	.254,-1	-.103,-1	.283,-1	.105	.830,-1
17	.287,-1	.275,-1	.342,-1	.187,-1	.841,-1	.753,-1	-.350,-1	.355,-1	.684,-1	.772,-1
18	.260,-1	.415,-1	.414,-1	.373,-1	.179,-1	.184,-1	.809,-2	.948,-1	.690,-1	.107
19	.923,-2	.584,-1	-.623,-3	.256,-1	.478,-1	.476,-1	-.211,-1	.953,-1	.400,-1	.959,-1
20	-.244,-1	.382,-1	-.154,-1	.419,-1	.673,-1	.446,-1	.669,-2	.586,-1	.448,-1	.102
21	-.160,-1	-.185,-1	.321,-1	.492,-1	.664,-1	.323,-1	.276,-1	.612,-1	.520,-1	.132,-1
22	.475,-2	.196,-1	.753,-1	.562,-1	.336,-1	.300,-1	.451,-2	.162,-1	.478,-1	.117,-1
23	-.829,-2	.354,-1	.474,-1	.615,-1	.608,-1	.416,-1	-.422,-1	.630,-1	.562,-1	.193,-1
24	-.395,-3	.339,-1	.556,-1	.583,-1	.413,-1	.910,-1	-.155,-1	.609,-1	.620,-1	.905,-1
25	-.167,-1	-.777,-2	.643,-1	.732,-1	-.852,-2	.745,-1	-.552,-3	.683,-1	.130,-1	.110
26	.261,-1	-.919,-2	.457,-2	.120	.366,-1	.484,-1	.174,-1	.558,-1	.209,-1	.908,-1
27	.272,-1	.315,-1	.274,-1	.557,-1	.333,-1	.169,-1	.246,-1	.740,-1	.358,-1	.879,-1
28	.102,-1	.186,-2	.401,-1	.351,-1	.636,-1	.545,-1	-.190,-1	.945,-1	.104	.101
29	.196,-1	.921,-2	.154,-1	.374,-1	.601,-1	.692,-1	-.338,-2	.107	.512,-1	.761,-1
30	.155,-1	.288,-1	.161,-1	.272,-1	-.269,-1	.464,-1	.104,-1	.483,-1	.358,-1	.796,-1
31	-.123,-2	-.206,-1	.848,-1	.560,-1	-.135,-1	.461,-1	-.816,-3	.857,-1	.617,-1	.712,-1
32	-.156,-1	.199,-1	.549,-1	.391,-1	-.111,-1	.250,-1	.101,-1	.425,-1	.655,-1	.148
33	.245,-1	.207,-1	.500,-1	.550,-1	-.424,-2	.182,-1	-.202,-2	.406,-1	.365,-1	.976,-1
34	.661,-1	.527,-2	.470,-1	.345,-1	-.458,-2	.108,-1	.425,-1	.114	-.117,-1	.466,-1
35	.581,-2	.683,-1	.512,-1	.371,-1	-.580,-2	.429,-1	.600,-1	.974,-1	-.168,-1	.918,-2
36	-.256,-2	.153,-2	.450,-1	.283,-1	-.342,-2	.422,-1	.583,-1	.389,-1	-.163,-1	.575,-1
37	-.164,-1	.107,-1	.430,-1	.203,-1	.398,-1	.316,-1	.773,-1	.385,-1	.534,-1	.602,-1
38	.226,-1	.120,-1	.401,-1	.829,-2	-.306,-1	.290,-1	.609,-1	.336,-1	.333,-1	.739,-1
39	-.716,-2	-.394,-1	.656,-1	-.634,-2	.826,-2	.138,-1	.671,-1	.621,-1	.963,-1	.502,-1
40	.365,-1	-.574,-2	.892,-2	-.171,-1	-.357,-1	.246,-1	.379,-1	.122,-1	.535,-1	.131
41	.545,-1	.402,-1	.384,-1	.947,-2	-.230,-1	.158,-1	.348,-1	.299,-1	.866,-2	.959,-1
42	.647,-1	.206,-2	.211,-1	.110,-1	.279,-1	.682,-1	.709,-1	.794,-1	.507,-1	.973,-1
43	.360,-1	-.115,-1	-.142,-1	.307,-1	-.465,-2	.219,-1	.109,-1	.605,-1	.158,-1	.934,-1
44	.574,-1	-.387,-1	.538,-1	-.116,-3	-.106,-1	-.279,-1	.268,-1	.888,-1	.438,-1	.178,-1
45	.107,-1	.949,-2	.665,-1	.274,-2	-.295,-1	-.560,-1	.312,-1	.131	.328,-1	.525,-1
46	-.136,-1	.582,-2	.297,-1	.382,-1	-.330,-2	.727,-3	.562,-1	.989,-1	.551,-1	.981,-1
47	.353,-1	.442,-1	.653,-1	-.884,-2	-.375,-1	.670,-2	.530,-1	.105	.121	.498,-1
48	.318,-1	.348,-1	.979,-1	.160,-1	-.880,-1	-.957,-2	.210,-1	.994,-1	.880,-1	.472,-1
49	.815,-1	.957,-2	.499,-1	.194,-1	-.517,-1	-.140,-1	.195,-1	.202,-1	.108	.470,-1
50	.767,-1	.105,-1	.220,-1	.391,-2	-.983,-2	-.145,-1	.429,-2	.274,-1	.385,-1	.101
51	.975,-1	.173,-1	.282,-1	.408,-2	.364,-1	.180,-1	.155,-2	.984,-1	.937,-1	.927,-1
52	.824,-1	-.263,-1	.378,-1	.733,-1	-.261,-1	.216,-1	-.227,-1	.750,-1	.776,-1	.133
53	.580,-1	.436,-2	.127,-1	.457,-1	-.542,-1	-.101,-1	-.842,-2	.111,-1	.135	.887,-1
54	.288,-1	-.107,-1	.564,-1	-.971,-2	-.186,-1	.708,-2	-.501,-2	.271,-1	.135	.124
55	-.357,-1	.687,-1	.627,-2	-.237,-1	-.119,-1	.276,-1	.713,-2	.953,-1	.114	.140
56	.200,-1	-.977,-2	.675,-1	.202,-1	-.354,-1	.509,-1	-.219,-1	.872,-1	.773,-1	.105
57	.488,-1	-.214,-1	.364,-1	-.685,-1	-.196,-1	.571,-1	-.789,-2	.636,-1	.448,-1	.530,-1
58	.194,-1	-.233,-1	.424,-1	-.567,-1	.223,-1	.375,-1	-.500,-1	.507,-1	.477,-1	.100
59	.147,-1	-.125,-2	.359,-1	-.466,-1	.335,-2	.290,-1	-.857,-2	.502,-1	.786,-1	.110
60	-.101,-1	.978,-2	.198,-1	-.405,-1	-.407,-1	.934,-2	-.376,-1	.672,-1	.108	.130

Run No. 62 ; u component

	Separation Distance (m.)									
K	1	4	5	16	20	21	64	80	84	85
00	.874	.335	.359	.376	.659	.625	.168	.299	.148	.153
01	.748	.343	.376	.371	.658	.622	.152	.26.	.156	.158
02	.647	.350	.401	.360	.631	.608	.134	.269	.165	.160
03	.576	.369	.423	.348	.600	.581	.122	.252	.166	.164
04	.516	.381	.421	.346	.563	.556	.119	.236	.197	.180
05	.464	.387	.406	.343	.531	.531	.133	.206	.194	.179
06	.426	.374	.388	.330	.507	.510	.137	.202	.195	.175
07	.410	.368	.367	.306	.479	.488	.150	.199	.194	.169
08	.382	.353	.356	.305	.458	.463	.166	.187	.188	.165
09	.379	.355	.360	.310	.400	.417	.174	.161	.188	.168
10	.374	.353	.362	.302	.381	.387	.169	.144	.190	.170
11	.357	.367	.372	.301	.382	.370	.172	.132	.182	.180
12	.318	.354	.356	.294	.357	.365	.182	.119	.185	.181
13	.286	.345	.340	.286	.325	.339	.196	.121	.191	.180
14	.286	.333	.328	.260	.313	.342	.207	.112	.178	.169
15	.280	.329	.325	.242	.305	.341	.213	.117	.179	.169
16	.278	.316	.322	.229	.298	.342	.219	.111	.183	.170
17	.285	.314	.321	.227	.285	.331	.216	.109	.180	.154
18	.275	.302	.314	.208	.274	.323	.206	.111	.166	.148
19	.264	.288	.289	.186	.272	.317	.193	.115	.165	.164
20	.263	.272	.282	.163	.271	.312	.181	.114	.153	.158
21	.262	.250	.275	.149	.267	.313	.164	.124	.139	.159
22	.263	.233	.258	.148	.277	.328	.141	.139	.138	.156
23	.268	.234	.249	.146	.292	.336	.126	.150	.134	.147
24	.247	.235	.248	.143	.301	.337	.120	.152	.125	.140
25	.235	.220	.228	.149	.287	.327	.121	.151	.126	.142
26	.225	.208	.215	.161	.286	.318	.972,-1	.162	.130	.141
27	.209	.201	.219	.157	.283	.312	.807,-1	.153	.121	.129
28	.207	.191	.216	.158	.283	.303	.743,-1	.142	.110	.116
29	.216	.186	.209	.169	.283	.292	.817,-1	.119	.110	.111
30	.201	.175	.200	.166	.268	.267	.983,-1	.102	.110	.108
31	.200	.162	.178	.169	.249	.249	.111	.791,-1	.113	.104
32	.191	.155	.163	.156	.232	.222	.113	.635,-1	.112	.976,-1
33	.163	.147	.156	.150	.202	.206	.116	.568,-1	.114	.967,-1
34	.140	.140	.161	.141	.191	.195	.124	.535,-1	.956,-1	.742,-1
35	.126	.144	.153	.140	.199	.195	.125	.589,-1	.912,-1	.815,-1
36	.114	.144	.157	.151	.179	.182	.131	.770,-1	.107	.100
37	.111	.140	.159	.168	.185	.182	.131	.854,-1	.101	.104
38	.115	.131	.146	.178	.185	.184	.132	.918,-1	.979,-1	.112
39	.126	.111	.123	.200	.189	.192	.144	.101	.957,-1	.122
40	.153	.114	.128	.211	.184	.187	.149	.107	.102	.130
41	.165	.125	.123	.207	.172	.183	.170	.124	.117	.143
42	.161	.117	.123	.210	.170	.172	.183	.125	.116	.139
43	.141	.108	.110	.208	.159	.154	.133	.123	.112	.133
44	.123	.111	.110	.201	.145	.141	.167	.134	.131	.142
45	.122	.123	.118	.187	.131	.133	.163	.145	.157	.149
46	.102	.128	.121	.187	.143	.139	.163	.150	.169	.161
47	.938,-1	.144	.129	.182	.138	.141	.156	.172	.177	.175
48	.903,-1	.143	.135	.182	.133	.140	.166	.177	.175	.182
49	.809,-1	.157	.150	.209	.145	.142	.176	.163	.172	.184
50	.884,-1	.163	.142	.221	.149	.142	.164	.139	.164	.174
51	.106	.175	.147	.214	.145	.137	.162	.159	.151	.163
52	.121	.163	.137	.216	.132	.129	.158	.155	.145	.135
53	.117	.157	.145	.208	.145	.138	.143	.160	.130	.114
54	.105	.162	.148	.190	.142	.136	.147	.172	.123	.105
55	.113	.171	.151	.192	.139	.130	.161	.178	.144	.124
56	.113	.169	.158	.187	.145	.127	.179	.184	.160	.148
57	.108	.161	.155	.173	.144	.127	.206	.178	.159	.160
58	.101	.160	.153	.158	.142	.125	.225	.167	.164	.191
59	.885,-1	.165	.159	.141	.144	.119	.237	.160	.179	.202
60	.676,-1	.178	.163	.143	.146	.121	.238	.154	.194	.199

Run No. 62 ; v component

K	Separation Distance (m.)									
	1	4	5	16	20	21	64	80	84	85
00	.770	.584	.599	.286	.210	.240	.163,-1	-.510,-1	-.434,-1	-.587,-1
01	.693	.575	.598	.298	.201	.224	.136,-1	-.693,-1	-.576,-1	-.760,-1
02	.614	.504	.575	.277	.229	.242	.257,-1	-.587,-1	-.488,-1	-.854,-1
03	.560	.467	.533	.268	.239	.269	.387,-1	-.339,-1	-.564,-1	-.869,-1
04	.511	.432	.494	.248	.255	.257	.769,-1	-.378,-1	-.589,-1	-.952,-1
05	.489	.414	.463	.230	.244	.285	.866,-1	-.440,-1	-.679,-1	-.950,-1
06	.448	.355	.427	.229	.214	.258	.995,-1	-.527,-1	-.968,-1	-.117
07	.421	.312	.372	.236	.242	.271	.101	-.488,-1	-.607,-1	-.114
08	.386	.326	.362	.225	.250	.268	.114	-.429,-1	-.901,-1	-.116
09	.376	.325	.336	.229	.228	.240	.919,-1	-.283,-1	-.852,-1	-.116
10	.374	.291	.317	.221	.214	.196	.738,-1	-.220,-1	-.842,-1	-.105
11	.357	.278	.309	.153	.172	.175	.948,-1	-.359,-1	-.814,-1	-.742,-1
12	.342	.301	.335	.106	.150	.136	.763,-1	-.223,-1	-.894,-1	-.964,-1
13	.329	.272	.291	.123	.129	.127	.484,-1	-.302,-1	-.100	-.104
14	.290	.255	.264	.140	.112	.130	.730,-1	-.361,-1	-.817,-1	-.881,-1
15	.295	.255	.272	.151	.120	.130	.901,-1	-.363,-1	-.734,-1	-.870,-1
16	.292	.229	.276	.129	.117	.125	.110	-.411,-1	-.843,-1	-.966,-1
17	.301	.221	.273	.129	.980,-1	.962,-1	.105	-.448,-1	-.711,-1	-.847,-1
18	.285	.229	.249	.113	.710,-1	.964,-1	.915,-1	-.430,-1	-.623,-1	-.948,-1
19	.272	.209	.222	.890,-1	.838,-1	.670,-1	.109	-.333,-1	-.854,-1	-.999,-1
20	.243	.160	.203	.515,-1	.651,-1	.599,-1	.108	-.266,-1	-.927,-1	-.839,-1
21	.222	.141	.162	.422,-1	.387,-1	.603,-1	.893,-1	-.252,-1	-.949,-1	-.779,-1
22	.211	.151	.150	.633,-1	.432,-1	.611,-1	.102	-.993,-3	-.647,-1	-.548,-1
23	.181	.118	.153	.650,-1	.793,-2	.411,-1	.107	.204,-1	-.601,-1	-.460,-1
24	.171	.971,-1	.110	.915,-1	.509,-1	.359,-1	.940,-1	.18 ,-1	-.307,-1	-.303,-1
25	.159	.116	.116	.808,-1	.345,-1	.442,-1	.104	.194,-1	-.191,-1	-.253,-1
26	.158	.119	.984,-1	.954,-1	.458,-1	.595,-1	.730,-1	.116,-1	-.347,-3	-.668,-2
27	.182	.123	.103	.805,-1	.495,-1	.541,-1	.561,-1	.822,-2	-.134,-1	-.722,-3
28	.168	.118	.120	.772,-1	.733,-1	.449,-1	.529,-1	.238,-1	-.248,-1	-.330,-2
29	.167	.109	.108	.562,-1	.563,-1	.205,-1	.708,-1	.113,-1	-.290,-1	-.298,-2
30	.140	.103	.105	.417,-1	.201,-1	.941,-2	.683,-1	-.347,-1	-.190,-1	-.674,-2
31	.143	.795,-1	.100	.510,-1	.210,-1	-.326,-2	.524,-1	-.498,-1	-.764,-2	-.132,-1
32	.141	.697,-1	.885,-1	.191,-1	.127,-1	.275,-1	.122,-1	-.180,-1	-.514,-1	-.182,-1
33	.143	.102	.842,-1	.564,-2	.175,-1	.121,-1	-.671,-2	-.163,-1	-.679,-1	-.310,-1
34	.138	.721,-1	.864,-1	.169,-1	.369,-2	.125,-1	-.175,-1	-.279,-1	-.615,-1	-.207,-1
35	.132	.613,-1	.966,-1	-.106,-1	-.295,-2	.102,-1	-.408,-1	-.247,-1	-.583,-1	-.406,-1
36	.143	.104	.112	-.326,-1	-.387,-2	-.102,-1	-.629,-1	-.681,-1	-.822,-1	-.489,-1
37	.154	.118	.127	-.300,-1	-.247,-1	-.108,-1	-.649,-1	-.669,-1	-.671,-1	-.418,-1
38	.148	.109	.130	-.364,-3	-.362,-1	-.161,-1	-.669,-1	-.554,-1	-.805,-1	-.782,-1
39	.143	.848,-1	.101	.144,-1	-.279,-1	-.186,-1	-.661,-1	-.684,-1	-.883,-1	-.820,-1
40	.126	.760,-1	.941,-1	-.390,-2	-.144,-1	-.146,-1	-.720,-1	-.787,-1	-.698,-1	-.935,-1
41	.979,-1	.571,-1	.989,-1	.619,-2	-.122,-1	.134,-1	-.732,-1	-.938,-1	-.859,-1	-.921,-1
42	.104	.405,-1	.811,-1	.153,-1	-.720,-2	.376,-1	-.116	-.805,-1	-.932,-1	-.847,-1
43	.101	.464,-1	.751,-1	.529,-1	.295,-2	.326,-1	-.869,-1	-.876,-1	-.115	-.964,-1
44	.978,-1	.402,-1	.722,-1	.357,-2	.168,-1	.411,-1	-.942,-1	-.733,-1	-.146	-.125
45	.914,-1	.272,-1	.577,-1	.183,-1	.113,-1	.307,-1	-.102	-.796,-1	-.153	-.155
46	.840,-1	.126,-1	.721,-1	-.442,-2	-.216,-1	.420,-1	-.816,-1	-.760,-1	-.141	-.133
47	.797,-1	.242,-1	.798,-1	-.937,-2	-.241,-1	.180,-1	-.647,-1	-.815,-1	-.114	-.118
48	.808,-1	.147,-1	.932,-1	-.273,-1	-.192,-1	.576,-3	-.438,-1	-.106	-.133	-.126
49	.842,-1	.349,-1	.860,-1	-.236,-1	-.662,-1	-.285,-1	-.467,-1	-.105	-.167	-.138
50	.949,-1	.392,-1	.735,-1	-.341,-1	-.596,-1	-.573,-1	-.613,-1	-.751,-1	-.148	-.140
51	.521,-1	.180,-1	.432,-1	-.817,-1	-.956,-1	-.569,-1	-.467,-1	-.818,-1	-.129	-.124
52	.356,-1	-.307,-1	.496,-1	-.673,-1	-.819,-1	-.621,-1	-.620,-1	-.789,-1	-.129	-.108
53	.134,-1	-.648,-1	.181,-1	-.677,-1	-.576,-1	-.454,-1	-.427,-1	-.570,-1	-.134	-.121
54	-.960,-2	-.623,-1	-.981,-2	-.391,-1	-.833,-1	-.418,-1	-.288,-1	-.564,-1	-.106	-.109
55	-.306,-1	-.498,-1	-.415,-2	-.107,-1	-.526,-1	-.407,-1	-.234,-2	-.829,-1	-.128	-.850,-1
56	-.449,-2	-.289,-1	-.128,-1	.171,-1	-.418,-1	-.370,-1	-.268,-1	-.551,-1	-.998,-1	-.890,-1
57	-.660,-2	-.176,-1	.103,-1	-.180,-1	-.330,-1	-.239,-1	-.134,-1	-.787,-1	-.104	-.876,-1
58	.146,-2	-.118,-1	-.746,-2	-.317,-1	-.476,-1	-.528,-2	-.862,-2	-.674,-1	-.864,-1	-.999,-1
59	-.191,-1	.884,-2	.158,-1	-.148,-1	-.559,-1	-.229,-1	-.135,-1	-.731,-1	-.906,-1	-.742,-1
60	-.231,-1	-.198,-1	.651,-2	-.892,-2	-.230,-1	-.297,-1	-.288,-1	-.606,-1	-.817,-1	-.822,-1

Run No. 65 ; u component

K	Separation Distance (m.)									
	6	12	1	24	36	42	48	72	84	90
00	.542	.[illegible]	.[illegible]					.176	.476,-1	.860,-2
01	.[illegible]77	.[illegible]	.252					.128	.668,-1	.380,-1
02	.717	.554	.[illegible]94					.993,-1	.101	.506,-1
03	.[illegible]6	.555	.439					.861,-1	.836,-1	.84[illegible],-1
04	.534	.497	.450					.819,-1	.550,-1	.798,-1
05	.466	.426	.448					.796,-1	.372,-1	.536,-1
06	.405	.361	.444					.814,-1	.569,-1	.471,-1
07	.330	.296	.412					.829,-1	.559,-1	.300,-1
08	.257	.259	.368					.807,-1	.393,-1	.262,-1
09	.187	.222	.326					.921,-1	.142,-1	.475,-1
10	.130	.184	.278					.119	-.532,-2	.452,-1
11	.810,-1	.154	.236					.134	-.103,-1	.290,-1
12	.511,-1	.115	.185					.151	.169,-2	.141,-1
13	.254,-1	.854,-1	.117					.142	.258,-1	.139,-1
14	.738,-2	.677,-1	.687,-1					.136	.392,-1	.176,-1
15	-.933,-2	.729,-1	.357,-1					.131	.548,-1	.295,-1
16	-.741,-2	.866,-1	.237,-1					.130	.590,-1	.495,-1
17	-.241,-1	.713,-1	.351,-1					.147	.439,-1	.820,-1
18	-.362,-1	.553,-1	.517,-1					.149	.624,-1	.943,-1
19	-.328,-1	.627,-1	.559,-1					.149	.830,-1	.988,-1
20	-.422,-1	.416,-1	.499,-1					.136	.999,-1	.110
21	-.582,-1	.179,-1	.404,-1					.131	.858,-1	.133
22	-.594,-1	.143,-1	.321,-1					.118	.953,-1	.143
23	-.593,-1	.174,-1	.258,-1					.954,-1	.936,-1	.127
24	-.642,-1	.145,-1	.294,-1					.856,-1	.793,-1	.118
25	-.510,-1	.922,-2	.138,-1					.743,-1	.772,-1	.122
26	-.323,-1	.148,-1	.270,-2					.674,-1	.636,-1	.105
27	-.221,-1	.385,-1	.105,-1					.674,-1	.431,-1	.694,-1
28	-.844,-2	.491,-1	.303,-1					.868,-1	.462,-1	.852,-1
29	-.110,-2	.641,-1	.431,-1					.782,-1	.302,-1	.702,-1
30	.127,-1	.830,-1	.632,-1					.738,-1	.158,-1	.642,-1
31	.270,-1	.902,-1	.749,-1					.661,-1	.136,-1	.454,-1
32	.321,-1	.932,-1	.814,-1					.436,-1	.756,-3	.267,-1
33	.320,-1	.916,-1	.108					.151,-1	-.785,-2	.373,-2
34	.198,-1	.755,-1	.122					.338,-3	-.264,-1	-.105,-1
35	.410,-2	.914,-1	.106					.125,-1	-.530,-1	-.282,-1
36	.126,-1	.828,-1	.112					.255,-1	-.617,-1	-.516,-1
37	.445,-1	.912,-1	.996,-1					.151,-1	-.360,-1	-.725,-1
38	.695,-1	.962,-1	.877,-1					.188,-1	-.000	-.593,-1
39	.742,-1	.970,-1	.850,-1					.338,-1	-.519,-2	-.311,-1
40	.579,-1	.954,-1	.990,-1					.422,-1	-.251,-1	-.426,-2
41	.333,-1	.826,-1	.107					.333,-1	.387,-2	-.156,-1
42	.101	.745,-1	.108					.209,-1	.180,-1	.320,-3
43	.874,-1	.875,-1	.117					.274,-1	.339,-1	.165,-1
44	.781,-1	.974,-1	.117					.341,-1	.658,-1	.402,-1
45	.896,-1	.106	.136					.259,-1	.732,-1	.519,-1
46	.926,-1	.954,-1	.127					.143,-1	.760,-1	.628,-1
47	.719,-1	.115	.112					.457,-1	.962,-1	.603,-1
48	.604,-1	.936,-1	.119					.630,-1	.849,-1	.759,-1
49	.519,-1	.644,-1	.102					.521,-1	.643,-1	.627,-1
50	.353,-1	.495,-1	.872,-1					.480,-1	.419,-1	.886,-1
51	.139,-1	.511,-1	.753,-1					.693,-1	.471,-1	.102
52	-.152,-1	.663,-1	.764,-1					.100	.453,-1	.111
53	.351,-2	.810,-1	.689,-1					.121	.443,-1	.102
54	.284,-1	.569,-1	.790,-1					.143	.590,-1	.839,-1
55	.752,-1	.511,-1	.845,-1					.137	.708,-1	.730,-1
56	.237,-1	.452,-1	.778,-1					.122	.739,-1	.816,-1
57	.184,-1	.278,-1	.775,-1					.997,-1	.922,-1	.106
58	.930,-2	.216,-1	.614,-1					.101	.924,-1	.108
59	-.489,-2	.755,-1	.432,-1					.975,-1	.941,-1	.114
60	-.284,-2	.443,-1	.258,-1					.905,-1	.775,-1	.122

Run No. 65 ; v component

	Separation Distance (m.)									
K	6	12	18	24	36	42	48	72	84	90
00	.145	.196	.128					.690,-1	.35?,-1	.638,-2
01	.335	.307	.137					.568,-2	.497,-1	.349,-1
02	.452	.386	.218					-.757,-2	.493,-1	.152,-1
03	.278	.246	.296					.704,-2	-.129,-2	.392,-1
04	.351	.104	.304					.423,-1	.274,-1	.611,-1
05	.107	.819,-1	.238					.600,-1	.217,-1	.819,-1
06	.120	.530,-1	.171					.771,-1	.227,-1	.837,-1
07	.741,-1	.497,-1	.161					.721,-1	.350,-1	.752,-1
08	.827,-1	.479,-1	.141					.753,-1	.537,-1	.312,-1
09	.652,-1	.174,-1	.119					.715,-1	.198,-1	.291,-1
10	.874,-1	.281,-1	.102					.575,-1	.405,-1	.473,-1
11	.659,-1	.323,-1	.937,-1					.542,-1	.?54,-1	.465,-1
12	.218,-1	.654,-1	.911,-1					.252,-1	.102,-1	.780,-1
13	.272,-1	.104	.101					-.872,-1	.252,-1	.288,-1
14	.374,-1	.950,-1	.727,-1					-.140,-1	.105,-1	.?04,-1
15	.482,-1	.114	.739,-1					.590,-2	.210,-1	.443,-1
16	.240,-1	.892,-1	.825,-1					.232,-1	.125,-1	.?46,-1
17	.690,-1	.715,-1	.894,-1					.660,-1	.448,-1	.507,-1
18	.561,-1	.758,-1	.822,-1					.617,-1	.264,-1	.891,-1
19	.503,-1	.477,-1	.372,-1					.876,-1	.424,-1	.650,-1
20	.438,-1	.892,-1	.720,-1					.827,-1	.430,-1	.115,-1
21	.676,-1	.309,-1	.672,-1					.689,-1	.595,-1	.301,-1
22	.958,-1	.332,-1	.616,-1					.218,-1	.352,-1	.549,-1
23	.154	.679,-1	.707,-1					-.133,-1	.190,-1	.614,-1
24	.172	.105	.872,-1					.255,-1	.760,-2	.330,-1
25	.170	.856,-1	.142					.726,-1	.644,-2	.460,-2
26	.108	.852,-1	.173					.554,-1	.342,-1	.115,-1
27	.819,-1	.744,-1	.155					.561,-1	.521,-1	.540,-1
28	.962,-1	.383,-1	.106					.829,-1	.527,-1	.720,-1
29	.832,-1	.400,-1	.108					.411,-1	.559,-1	.824,-1
30	.856,-1	.810,-1	.805,-1					.397,-1	.397,-1	.674,-1
31	.988,-1	.838,-1	.113					.452,-1	.282,-1	.471,-1
32	.517,-1	.241,-1	.140					.510,-1	.365,-1	.272,-1
33	.349,-1	.942,-2	.122					.396,-1	.406,-1	.103,-1
34	.404,-1	.297,-1	.677,-1					.221,-1	.337,-1	.118,-1
35	.448,-1	.313,-1	.583,-1					.944,-2	.582,-2	.235,-1
36	.506,-1	.727,-1	.643,-1					.211,-1	.108,-1	.225,-1
37	.663,-1	.964,-1	.831,-1					.507,-1	.130.-1	-.189,-1
38	.100	.608,-1	.143					.476,-1	-.153,-1	-.445,-2
39	.106	.517,-1	.178					.208,-1	.191,-2	.168,-1
40	.827,-1	.80?,-1	.156					.25?,-1	.166,-1	.334,-1
41	.710,-1	.789,-1	.148					-.605,-2	.415,-1	.341,-1
42	.669,-1	.731,-1	.151					-.?27,-1	.327,-1	.340,-1
43	.693,-1	.699,-1	.141					.109,-1	.172,-1	.585,-1
44	.683,-1	.399,-1	.144					.389,-1	-.193,-1	.449,-1
45	.356,-1	.398,-1	.140					.384,-1	-.957,-2	.781,-2
46	.124,-1	.165,-1	.131					.501,-1	.342,-1	-.369,-1
47	.397,-1	.198,-1	.110.					.?14,-1	.379,-1	-.119,-1
48	.185,-1	.478,-1	.915,-1					.610,-1	.683,-1	.252,-1
49	.278,-1	.996,-1	.861,-1					.350,-1	.377,-1	.430,-1
50	.841,-1	.646,-1	.106					.188,-1	.334,-1	.555,-1
51	.714,-1	.475,-1	.875,-1					.396,-1	.349,-1	.647,-1
52	.269,-1	.439,-1	.677,-1					.579,-2	-.344,-2	.100
53	.540,-1	.731,-1	.642,-1					-.274,-1	-.155,-1	.109
54	.669,-1	.516,-1	.112					-.723,-1	-.363,-1	.850,-1
55	.938,-1	.643,-1	.107					-.747,-1	-.?22,-1	.919,-2
56	.578,-1	.613,-1	.825,-1					-.760,-1	.871,-2	-.166,-1
57	.682,-1	.623,-1	.846,-1					-.255,-1	.496,-1	-.713,-2
58	.578,-1	.765,-1	.848,-1					.110,-1	.391,-1	.295,-1
59	.877,-1	.736,-1	.878.-1					.244,-1	.108,-1	.346,-1
60	.791,-1	.533,-1	.825,-1					.241,-1	.162,-1	.179,-1

Run No. 66 ; u component

	Separation Distance (m.)									
K	6	12	18	24	36	48	48	72	84	90
00	.177	.154	.841,-1	.177	.727,-1	.121	.548,-1	.156	.112	.113
01	.256	.146	.862,-1	.161	.654,-1	.126	.472,-1	.113	.106	.857,-1
02	.342	.839,-1	.905,-1	.152	.575,-1	.124	.328,-1	.100	.848,-1	.679,-1
03	.395	.314,-1	.810,-1	.107	.474,-1	.110	.525,-1	.977,-1	.449,-1	.778,-1
04	.363	.315,-1	.539,-1	.559,-1	.628,-2	.807,-1	.767,-1	.110	.527,-1	.737,-1
05	.299	.674,-1	.336,-1	-.154,-2	-.404,-2	.503,-1	.725,-1	.989,-1	.476,-1	.562,-1
06	.254	.727,-1	.304,-1	-.688,-1	-.220,-1	.369,-1	.575,-1	.798,-1	.578,-1	.339,-1
07	.232	.621,-1	.516,-1	-.370,-1	-.148,-1	.309,-1	.974,-1	.757,-1	.932,-1	.165,-1
08	.245	.479,-1	.813,-1	-.395,-1	-.188,-1	147,-1	.114	.722,-1	.926,-1	.235,-1
09	.248	.444,-1	.826,-1	.175,-1	.794,-2	.216,-2	.112	.746,-1	.125	.350,-1
10	.218	.481,-1	.613,-1	.672,-1	.255,-1	-.414,-1	.102	.652,-1	.117	.776,-1
11	.183	.379,-1	.628,-1	.775,-1	.655,-2	-.426,-1	.109	.456,-1	.113	.754,-1
12	.154	.334,-1	.630,-1	.698,-1	-.897,-3	-.219,-1	.116	.465,-1	.926,-1	.120
13	.912,-1	.600,-1	.606,-1	.361,-1	-.133,-1	.177,-1	.113	.705,-1	.850,-1	.133
14	.517,-1	.794,-1	.795,-1	.317,-1	-.897,-2	.318,-1	.965,-1	.911,-1	.851,-1	.155
15	.674,-1	.980,-1	.943,-1	.370,-1	-.538,-3	.364,-1	.960,-1	.682,-1	.730,-1	.149
16	.000,-1	.117	.125	.496,-1	-.296,-2	.562,-2	.758,-1	.689,-1	.274,-1	.144
17	.138	.139	.128	.705,-1	-.152,-1	.346,-2	.529,-1	.598,-1	.142,-1	.134
18	.134	.123	.122	.540,-1	.213,-1	-.216,-1	.152,-1	.913,-1	.635,-1	.105
19	.132	.852,-1	.147	.280,-1	.336,-1	.735,-2	.361,-1	.753,-1	.112	.975,-1
20	.138	.107	.134	.224,-1	.170,-1	-.130,-1	.826,-1	.814,-1	.125	.108
21	.131	.122	.147	-.158,-1	.422,-2	-.290,-1	.896,-1	.845,-1	.110	.111
22	.107	.126	.133	-.466,-3	.247,-1	-.389,-1	.916,-1	.912,-1	.692,-1	.109
23	.124	.106	.120	-.210,-1	.416,-1	-.300,-1	.982,-1	.100	.602,-1	.116
24	.106	.126	.938,-1	.792,-2	.361,-1	.104,-1	.111	.102	.660,-1	.130
25	.883,-1	.121	.104	.321,-1	.490,-1	.262,-1	.133	.115	.802,-1	.915,-1
26	.791,-1	.977,-1	.930,-1	.777,-1	.506,-1	.522,-1	.150	.142	.944,-1	.860,-1
27	.870,-1	.651,-1	.636,-1	.821,-1	.679,-1	.587,-1	.987,-1	.174	.128	.987,-1
28	.937,-1	.362,-1	.243,-1	.551,-1	.556,-1	.711,-1	.717,-1	.132	.995,-1	.868,-1
29	.109	.295,-1	.269,-1	.312,-1	.575,-1	.976,-1	.699,-1	.114	.752,-1	.718,-1
30	.124	.138,-1	.515,-1	.397,-1	.301,-1	.132	.563,-1	.939,-1	.253,-1	.586,-1
31	.117	.622,-1	.363,-1	.423,-1	-.821,-2	.175	.428,-1	.830,-1	.175,-1	.463,-1
32	.106	.765,-1	.523,-2	.315,-1	-.198,-1	.187	.344,-1	.454,-1	.354,-2	.145,-1
33	.101	.736,-1	-.754,-2	.423,-1	-.309,-2	.145	.527,-1	.625,-1	.234,-1	-.000
34	.101	.609,-1	-.374,-2	.949,-1	-.501,-2	.111	.556,-1	.132	.432,-1	.102,-1
35	.867,-1	.833,-1	.149,-1	.112	-.124,-1	.805,-1	.342,-1	.127	.259,-1	.581,-2
36	.866,-1	.653,-1	.181,-1	.158	.139,-1	.900,-1	.462,-1	.106	.326,-1	.143,-1
37	.806,-1	.603,-1	.193,-1	.130	-.253,-1	.857,-1	.545,-1	.115	.957,-2	.133,-2
38	.912,-1	.516,-1	-.872,-2	.864,-1	-.540,-1	.104	.694,-1	.131	.482,-1	-.230,-1
39	.835,-1	.802,-1	-.187,-2	.842,-1	-.507,-1	.769,-1	.850,-1	.113	.557,-1	-.102,-1
40	.972,-1	.714,-1	.295,-1	.465,-1	-.163,-1	.660,-1	.936,-1	.939,-1	.631,-1	-.887,-3
41	.115	.994,-1	.669,-1	.752,-1	.314,-2	.588,-1	.927,-1	.661,-1	.348,-1	.368,-1
42	.136	.989,-1	.105	.744,-1	.262,-1	.179,-1	.997,-1	.616,-1	.140,-1	.231,-1
43	.158	.112	.141	.556,-1	.256,-1	.143,-1	.109	.772,-1	-.253,-2	.207,-1
44	.175	.998,-1	.146	.274,-1	.166,-1	.427,-1	.885,-1	.787,-1	.980,-2	.479,-1
45	.154	.109	.128	.126,-2	-.538,-2	.719,-1	.957,-1	.739,-1	.246,-1	.634,-1
46	.105	.115	.996,-1	-.573,-2	.135,-1	.740,-1	.974,-1	.364,-1	-.640,-2	.541,-1
47	.719,-1	.873,-1	.115	.141,-1	.583,-2	.583,-1	.644,-1	.453,-1	-.280,-1	.559,-1
48	.684,-1	.851,-1	.951,-1	.214,-1	-.222,-1	.643,-1	.899,-1	.853,-1	-.276,-2	.659,-1
49	.438,-1	.469,-1	.101	.519,-1	-.193,-1	.182,-1	.594,-1	.968,-1	.129,-1	.451,-1
50	.307,-1	.505,-1	.108	.870,-1	-.579,-2	.121,-1	.609,-1	.964,-1	.920,-2	.350,-1
51	.468,-1	.498,-1	.123	.107	.489,-2	.342,-1	.181,-1	.891,-1	.402,-1	.332,-1
52	.284,-1	.681,-1	.149	.101	.274,-1	.522,-1	.244,-1	.522,-1	.189,-1	.347,-1
53	.183,-1	.615,-1	.150	.873,-1	.447,-1	.480,-1	.230,-1	.415,-1	.183,-1	.304,-1
54	.152,-1	.291,-1	.150	.660,-1	.100,-1	.589,-1	.184,-1	.405,-1	.221,-1	.377,-1
55	.325,-1	.437,-1	.144	.684,-1	.133,-1	.708,-1	.219,-1	.620,-1	.398,-1	.491,-1
56	.414,-1	.825,-1	.140	.691,-1	.484,-2	.765,-1	.682,-1	.626,-1	.584,-1	.506,-1
57	.295,-1	.812,-1	.106	.429,-1	.821,-2	.623,-1	.115	.779,-1	.443,-1	.661,-1
58	.580,-1	.727,-1	.751,-1	.340,-1	.220,-1	.493,-1	.624,-1	.108	.157,-1	.502,-1
59	.603,-1	.789,-1	.967,-1	.303,-1	.288,-1	.524,-1	.532,-1	.117	-.373,-2	.402,-1
60	.709,-1	.745,-1	.110	.280,-1	.233,-1	.462,-1	.371,-1	.131	.108,-1	.335,-1

Run No. 66 ; v component

Separation Distance (m.)

K	6	12	18	24	36	42	48	72	84	90
00	.306	.289	.306	.279	.308	.318	.152	.196	.177	.153
01	.330	.314	.294	.262	.349	.344	.180	.143	.132	.164
02	.453	.305	.271	.273	.339	.338	.198	.104	.156	.163
03	.362	.302	.277	.286	.324	.370	.185	.106	.154	.149
04	.254	.286	.258	.304	.327	.368	.169	.142	.812,-1	.139
05	.249	.254	.256	.316	.344	.385	.207	.156	.806,-1	.167
06	.274	.257	.265	.323	.336	.375	.217	.160	.120	.192
07	.258	.233	.240	.314	.313	.356	.237	.153	.167	.195
08	.229	.212	.221	.308	.287	.307	.226	.177	.142	.177
09	.236	.203	.261	.289	.284	.305	.203	.173	.174	.169
10	.230	.201	.276	.271	.292	.337	.178	.160	.203	.146
11	.265	.202	.251	.249	.266	.303	.141	.179	.178	.189
12	.232	.204	.235	.257	.290	.303	.163	.196	.132	.194
13	.270	.181	.210	.254	.299	.294	.161	.155	.152	.183
14	.262	.221	.222	.312	.298	.305	.169	.147	.179	.162
15	.312	.212	.189	.316	.294	.309	.184	.119	.150	.144
16	.341	.220	.216	.327	.266	.306	.187	.143	.140	.145
17	.312	.209	.273	.320	.267	.323	.194	.126	.128	.164
18	.258	.202	.263	.303	.283	.282	.209	.112	.109	.128
19	.252	.206	.238	.291	.291	.291	.219	.122	.138	.146
20	.246	.175	.230	.293	.293	.281	.224	.140	.159	.129
21	.244	.185	.213	.271	.316	.308	.249	.150	.170	.139
22	.291	.203	.211	.285	.307	.296	.259	.145	.171	.182
23	.276	.216	.216	.294	.287	.309	.222	.120	.170	.195
24	.278	.241	.255	.305	.292	.339	.190	.124	.150	.218
25	.288	.246	.281	.313	.280	.326	.179	.139	.152	.185
26	.279	.230	.260	.300	.298	.318	.162	.141	.127	.164
27	.276	.202	.291	.308	.286	.336	.158	.125	.129	.138
28	.277	.219	.249	.297	.276	.331	.157	.115	.133	.123
29	.262	.212	.244	.287	.250	.336	.141	.130	.151	.152
30	.265	.175	.238	.264	.260	.301	.157	.160	.150	.150
31	.237	.192	.207	.279	.272	.312	.157	.140	.152	.149
32	.244	.178	.178	.296	.273	.315	.187	.145	.129	.158
33	.283	.182	.195	.302	.274	.314	.155	.118	.105	.177
34	.294	.215	.213	.295	.302	.328	.135	.126	.107	.155
35	.302	.234	.243	.296	.294	.325	.142	.141	.115	.181
36	.303	.253	.253	.295	.298	.321	.150	.133	.794,-1	.123
37	.313	.243	.267	.288	.279	.308	.142	.167	.896,-1	.121
38	.311	.210	.254	.293	.297	.292	.136	.152	.106	.125
39	.302	.205	.283	.311	.315	.329	.152	.149	.126	.131
40	.281	.205	.270	.279	.292	.329	.160	.143	.162	.119
41	.250	.185	.250	.270	.282	.347	.149	.139	.159	.133
42	.229	.188	.244	.269	.285	.329	.122	.191	.141	.167
43	.209	.182	.224	.287	.261	.337	.894,-1	.194	.144	.155
44	.254	.157	.224	.301	.265	.332	.103	.157	.121	.133
45	.277	.204	.233	.310	.287	.314	.120	.135	.123	.132
46	.274	.208	.235	.327	.292	.293	.143	.136	.136	.194
47	.299	.224	.265	.308	.304	.287	.185	.147	.599,-1	.228
48	.279	.215	.214	.315	.286	.284	.202	.147	.112	.183
49	.280	.182	.212	.319	.305	.316	.208	.136	.935,-1	.125
50	.277	.167	.229	.333	.292	.324	.156	.157	.606,-1	.113
51	.282	.139	.276	.326	.311	.331	.158	.139	.649,-1	.143
52	.268	.999,-1	.230	.326	.297	.330	.145	.127	.949,-1	.116
53	.287	.129	.187	.310	.344	.347	.130	.131	.108	.158
54	.245	.153	.196	.300	.316	.334	.116	.137	.165	.148
55	.242	.168	.200	.280	.339	.350	.120	.181	.152	.160
56	.228	.182	.226	.266	.302	.344	.124	.197	.162	.170
57	.224	.196	.221	.244	.283	.313	.123	.160	.129	.143
58	.282	.171	.249	.270	.284	.314	.136	.136	.969,-1	.142
59	.292	.123	.237	.267	.297	.309	.136	.136	.103	.182
60	.314	.142	.193	.269	.324	.321	.106	.121	.107	.180



Run No. 67 ; u component

	Separation Distance (m.)									
K	1	4	5	16	20	21	64	80	84	85
00	.492	.417,-1	.715,-1	.980,-1	.167	.102	-.356,-1	.750,-1	.498,-1	.180,-1
01	.433	.280,-1	.642,-1	.697,-1	.178	.953,-1	.108,-1	.635,-1	.582,-1	.415,-2
02	.347	.111,-1	.461,-1	.918,-1	.212	.117	.112,-2	.265,-1	.190,-1	.156,-1
03	.269	-.118,-1	.371,-1	.732,-1	.205	.144	-.126,-1	.161,-2	.112,-1	.446,-1
04	.205	-.248,-1	.800,-1	.719,-1	.204	.143	-.325,-1	.253,-1	-.266,-1	.301,-1
05	.152	-.179,-1	.111	.112	.189	.129	-.645,-1	.157,-1	-.921,-2	.649,-2
06	.989,-1	-.564,-2	.986,-1	.117	.172	.132	-.668,-1	.182,-1	-.100,-1	.145,-1
07	.585,-1	.142,-1	.949,-1	.105	.148	.115	-.547,-1	.335,-1	-.917,-2	.103,-1
08	.661,-2	.985,-2	.773,-1	.631,-1	.121	.914,-1	-.166,-1	.281,-1	-.132,-1	-.441,-2
09	-.188,-1	.162,-1	.872,-1	.543,-1	.108	.722,-1	-.582,-2	.400,-1	-.291,-1	-.875,-2
10	-.274,-1	.267,-1	.712,-1	.774,-1	.112	.538,-1	-.390,-1	.635,-1	-.176,-1	-.100,-1
11	-.290,-1	.359,-1	.677,-1	.896,-1	.101	.529,-1	-.427,-1	.594,-1	-.235,-1	.268,-2
12	-.232,-1	.539,-1	.755,-1	.737,-1	.610,-1	.419,-1	-.485,-1	.359,-1	-.329,-1	-.138,-2
13	-.000	.578,-1	.587,-1	.790,-1	.345,-1	.465,-1	-.223,-1	.431,-1	-.165,-1	-.162,-1
14	.275,-1	.503,-1	.319,-1	.104	.111,-1	.615,-1	-.112,-2	.816,-1	-.183,-1	-.157,-1
15	.392,-1	.361,-1	.901,-2	.103	-.226,-1	.666,-1	-.255,-1	.105	-.552,-2	.204,-1
16	.362,-1	.266,-1	.318,-1	.771,-1	-.216,-1	.721,-1	-.298,-1	.119	-.155,-1	.859,-2
17	.261,-1	.381,-1	.345,-1	.804,-1	-.139,-1	.805,-1	-.591,-1	.121	.636,-2	.241,-1
18	.443,-2	.466,-1	.452,-1	.645,-1	-.314,-1	.608,-1	-.543,-1	.869,-1	.870,-2	.162,-1
19	-.601,-2	.673,-1	.714,-1	.492,-1	-.495,-1	.331,-1	-.826,-1	.110	-.789,-2	-.186,-1
20	-.119,-1	.454,-1	.519,-1	.542,-1	-.329,-1	-.490,-2	-.813,-1	.887,-1	-.530,-2	-.170,-1
21	-.173,-1	.719,-1	.473,-1	.474,-1	-.486,-2	.270,-2	-.740,-1	.755,-1	.311,-2	-.286,-2
22	-.167,-1	.100	.637,-1	.670,-1	.175,-1	.238,-1	-.488,-1	.757,-1	-.226,-1	-.260,-3
23	-.322,-1	.102	.911,-1	.646,-1	.236,-1	.125,-1	-.346,-1	.907,-1	-.272,-1	.320,-1
24	-.420,-1	.132	.112	.506,-1	.276,-1	.874,-2	-.250,-1	.990,-1	-.187,-3	.397,-1
25	-.598,-1	.139	.108	.351,-1	.521,-2	.219,-1	-.213,-1	.969,-1	.328,-2	.390,-1
26	-.641,-1	.102	.952,-1	.743,-1	-.134,-1	.257,-1	-.387,-2	.116	.118,-2	.396,-1
27	-.786,-1	.799,-1	.765,-1	.838,-1	-.197,-1	.252,-1	.353,-1	.119	.146,-1	.273,-1
28	-.863,-1	.599,-1	.544,-1	.693,-1	-.933,-2	.159,-1	.236,-1	.101	.136,-1	.409,-1
29	-.734,-1	.615,-1	.494,-1	.611,-1	-.218,-1	.110,-1	.227,-1	.138	.320,-1	.383,-1
30	-.841,-1	.426,-1	.288,-1	.749,-1	-.532,-1	-.225,-1	.583,-1	.117	.113,-1	.328,-1
31	-.710,-1	.370,-1	.230,-1	.867,-1	-.595,-1	-.196,-1	.638,-1	.997,-1	.910,-2	.214,-1
32	-.476,-1	.457,-1	.472,-1	.115	-.564,-1	-.250,-1	.395,-1	.819,-1	.207,-1	.271,-1
33	-.147,-1	.285,-1	.401,-1	.119	-.509,-1	-.311,-1	.338,-1	.794,-1	.325,-1	.416,-1
34	.188,-2	.373,-1	.455,-1	.137	-.345,-1	-.232,-1	.450,-1	.404,-1	.294,-1	.501,-1
35	.142,-1	.368,-1	.483,-1	.133	-.188,-1	-.178,-1	.573,-1	.433,-1	.558,-1	.497,-1
36	.277,-1	.422,-1	.836,-1	.128	-.390,-2	-.694,-2	.290,-1	.159,-1	.650,-1	.311,-1
37	.506,-1	.256,-1	.817,-1	.137	.417,-1	.190,-1	.365,-1	.103,-1	.690,-1	.213,-1
38	.165,-1	.114,-1	.768,-1	.145	.610,-1	.505,-1	.249,-1	.478,-2	.515,-1	.482,-1
39	-.161,-1	.267,-1	.548,-1	.159	.792,-1	.856,-1	.179,-1	.391,-2	.525,-1	.677,-1
40	-.526,-3	.536,-1	.852,-1	.163	.684,-1	.106	.160,-1	.776,-3	.738,-1	.825,-1
41	.323,-1	.678,-1	.103	.162	.306,-1	.998,-1	-.580,-2	-.131,-1	.104	.126
42	.267,-1	.773,-1	.117	.150	-.662,-2	.992,-1	.876,-2	-.408,-2	.119	.142
43	.216,-1	.738,-1	.123	.117	-.256,-1	.109	.967,-2	-.125,-1	.102	.103
44	.190,-1	.966,-1	.120	.724,-1	-.321,-1	.945,-1	.117,-1	.157,-1	.955,-1	.660,-1
45	.197,-1	.764,-1	.126	.495,-1	-.546,-1	.670,-1	.319,-1	.351,-1	.816,-1	.177,-1
46	.813,-2	.643,-1	.112	.205,-1	-.553,-1	.481,-1	.567,-1	.635,-1	.866,-1	-.240,-1
47	.313,-1	.643,-1	.117	.321,-2	-.632,-1	.279,-1	.195,-1	.954,-1	.793,-1	-.448,-1
48	.496,-1	.726,-1	.112	.110,-1	-.490,-1	.940,-2	.483,-1	.993,-1	.673,-1	-.141,-1
49	.831,-1	.670,-1	.113	-.696,-2	-.272,-1	.629,-2	.420,-1	.957,-1	.871,-1	-.528,-2
50	.866,-1	.773,-1	.117	.696,-2	.795,-2	.194,-1	.225,-1	.729,-1	.693,-1	.148,-2
51	.657,-1	.653,-1	.977,-1	.550,-3	.238,-2	.248,-1	.295,-2	.509,-1	.824,-1	.463,-1
52	.576,-1	.483,-1	.832,-1	-.990,-2	-.149,-1	.572,-2	.366,-1	.298,-1	.834,-1	.333,-1
53	.363,-1	.126,-1	.595,-1	.139,-1	-.103,-1	.314,-1	.357,-1	.539,-1	.682,-1	.427,-1
54	.200,-1	-.142,-1	.320,-1	.153,-1	.196,-1	.492,-1	-.326,-2	.501,-1	.407,-1	.422,-1
55	.225,-2	-.327,-1	-.945,-2	.246,-1	.308,-1	.220,-1	-.334,-1	.384,-1	.431,-1	.322,-1
56	-.803,-2	-.346,-1	-.357,-1	.404,-1	.738,-1	.392,-2	-.263,-1	.174,-1	-.109,-2	.150,-1
57	-.282,-1	-.615,-1	-.427,-1	.825,-1	.885,-1	.792,-2	-.125,-1	.459,-1	-.125,-1	.267,-1
58	-.199,-1	-.814,-1	-.415,-1	.102	.573,-1	.116,-1	.153,-1	.355,-1	-.190,-1	.231,-1
59	-.242,-1	-.540,-1	-.270,-1	.111	.506,-1	-.776,-2	.207,-1	.815,-1	.182,-1	.141,-1
60	-.589,-1	-.564,-1	-.133,-1	.965,-1	.437,-1	-.249,-1	.145,-1	.444,-1	.210,-1	-.107,-1

Run No. 67 ; v component

Separation Distance (m.)

K	1	4	5	16	20	21	64	80	84	85
00	.147	.161	.222	.269	.760.-1	.185	.276	.290	-.939,-2	.185
01	.434,-1	.134	.195	.267	.820,-1	.190	.277	.303	-.145,-2	.171
02	-.307,-1	.116	.173	.234	.127	.193	.288	.306	.267,-1	.158
03	-.592,-1	.121	.151	.310	.115	.193	.308	.304	-.214,-1	.113
04	-.166,-1	.131	.160	.338	.926,-1	.167	.323	.315	-.221,-1	.115
05	-.181,-1	.106	.156	.354	.639,-1	.184	.305	.302	-.327,-1	.150
06	-.362,-1	.848,-1	.176	.358	.535,-1	.188	.300	.298	-.146,-1	.146
07	-.936,-2	.683,-1	.188	.363	.574,-1	.186	.293	.292	.145,-2	.168
08	.299,-1	.333,-1	.174	.354	.523,-1	.178	.283	.278	-.341,-3	.173
09	.398,-3	.164,-1	.148	.345	.587,-1	.207	.273	.269	-.529,-2	.191
10	-.410,-1	.114,-1	.140	.338	.541,-1	.222	.256	.244	-.102,-2	.193
11	-.270,-1	.123,-1	.156	.333	.479,-1	.227	.284	.230	.184,-1	.174
12	.291,-2	.571,-2	.167	.326	.452,-1	.211	.282	.207	.102,-1	.159
13	.134,-1	-.246,-2	.154	.316	.261,-1	.175	.273	.201	.546,-2	.164
14	.960,-2	-.139,-1	.135	.327	.429,-1	.184	.258	.213	.896,-2	.166
15	.252,-1	-.122,-1	.114	.316	.647,-1	.176	.248	.233	.265,-2	.156
16	.745,-1	.105,-1	.110	.288	.476,-1	.158	.244	.236	-.515,-2	.190
17	.435,-1	.245,-1	.119	.266	.186,-1	.112	.232	.245	-.939,-2	.185
18	-.144,-1	.346,-1	.120	.250	.157,-1	.910,-1	.223	.264	-.457,-1	.153
19	-.465,-1	.572,-1	.124	.220	.572,-3	.793,-1	.234	.277	-.490,-1	.154
20	-.239,-1	.662,-1	.162	.204	-.232,-1	.458,-1	.248	.273	-.351,-1	.161
21	-.165,-2	.839,-1	.178	.191	-.202,-1	.609,-1	.258	.266	-.555,-2	.160
22	-.495,-2	.828,-1	.185	.178	-.429,-2	.940,-1	.258	.252	.111,-2	.199
23	-.776,-2	.827,-1	.195	.164	-.126,-1	.133	.276	.250	.965,-2	.196
24	.407,-2	.656,-1	.185	.150	-.229,-2	.148	.293	.253	.124,-1	.165
25	.107,-2	.732,-1	.168	.145	.529,-2	.157	.289	.251	.262,-1	.177
26	-.177,-1	.784,-1	.150	.145	-.143,-2	.171	.295	.233	.324,-1	.173
27	-.205,-1	.822,-1	.157	.152	-.213,-1	.162	.278	.237	.250,-1	.217
28	-.660,-2	.560,-1	.150	.161	-.353,-1	.147	.262	.254	.140,-1	.184
29	-.156,-1	.256,-1	.149	.169	-.574,-1	.134	.264	.253	.862,-2	.151
30	.543,-2	.105,-1	.152	.164	-.363,-1	.139	.277	.238	-.977,-2	.175
31	.230,-1	-.670,-2	.154	.165	-.276,-1	.148	.279	.221	.273,-2	.198
32	.252,-2	-.229,-1	.152	.169	-.293,-1	.167	.261	.220	-.302,-1	.176
33	.130,-1	-.275,-1	.162	.187	-.412,-1	.170	.251	.214	-.155,-1	.156
34	-.176,-1	-.660,-2	.173	.189	-.412,-1	.160	.247	.213	-.172,-1	.145
35	-.142,-1	.112,-1	.174	.196	-.310,-1	.180	.267	.221	-.561,-1	.114
36	-.123,-1	.133,-1	.179	.204	-.548,-1	.156	.259	.237	-.797,-1	.120
37	-.136,-2	.252,-1	.189	.215	-.688,-1	.152	.267	.257	-.929,-1	.152
38	.151,-1	.310,-1	.199	.230	-.824,-1	.173	.280	.284	-.885,-1	.167
39	-.404,-2	.309,-1	.180	.249	-.929,-1	.203	.288	.296	-.952,-1	.173
40	-.251,-1	.375,-1	.158	.245	-.696,-1	.211	.293	.291	-.730,-1	.165
41	-.286,-1	.492,-1	.155	.233	-.514,-1	.183	.287	.272	-.610,-1	.162
42	-.126,-1	.491,-1	.181	.211	-.482,-1	.192	.274	.270	-.178,-1	.173
43	-.124,-1	.590,-1	.172	.201	-.709,-1	.158	.266	.259	-.120,-1	.146
44	-.193,-1	.574,-1	.146	.189	-.666,-1	.140	.263	.255	-.456,-1	.136
45	-.422,-1	.613,-1	.132	.187	-.702,-1	.150	.274	.238	-.436,-1	.161
46	.107,-1	.499,-1	.136	.183	-.820,-1	.160	.276	.228	-.821,-1	.142
47	.443,-1	.577,-1	.157	.190	-.118	.147	.252	.222	-.909,-1	.128
48	.466,-1	.629,-1	.163	.189	-.130	.120	.233	.211	-.114	.960,-1
49	.539,-1	.537,-1	.168	.187	-.125	.134	.227	.200	-.905,-1	.102
50	.368,-1	.504,-1	.187	.190	-.108	.127	.222	.186	-.123	.100
51	.504,-2	.437,-1	.201	.185	-.999,-1	.132	.228	.165	-.114	.136
52	-.263,-1	.310,-1	.196	.179	-.979,-1	.136	.233	.146	-.123	.116
53	-.475,-2	.255,-1	.191	.168	-.104	.123	.216	.141	-.985,-1	.111
54	.156,-1	.176,-1	.180	.158	-.966,-1	.138	.198	.149	-.965,-1	.128
55	.272,-2	.621,-2	.169	.158	-.784,-1	.131	.206	.148	-.794,-1	.105
56	.369,-2	.696,-2	.191	.164	-.884,-1	.134	.205	.124	-.948,-1	.118
57	-.172,-1	-.197,-2	.189	.173	-.132	.130	.207	.118	-.969,-1	.120
58	-.423,-1	-.139,-1	.186	.166	-.137	.152	.225	.117	-.116	.148
59	-.201,-1	-.241,-1	.189	.171	-.155	.161	.234	.118	-.118	.150
60	.107,-1	-.245,-1	.203	.168	-.144	.152	.233	.130	-.125	.130

Run No. 68 ; u component

K	Separation Distance (m.)									
	1	4	5	16	20	21	64	80	84	85
00	.736	.475	.524	.520	.448	.430	.425	.417	.394	.415
01	.680	.487	.503	.500	.451	.432	.415	.401	.407	.426
02	.620	.484	.480	.489	.443	.439	.409	.418	.415	.425
03	.544	.492	.477	.490	.455	.442	.415	.448	.417	.429
04	.497	.486	.466	.475	.460	.435	.423	.464	.412	.440
05	.474	.481	.467	.472	.465	.447	.421	.443	.422	.460
06	.458	.471	.467	.478	.462	.451	.430	.447	.411	.458
07	.453	.440	.450	.466	.457	.438	.441	.454	.401	.465
08	.432	.440	.447	.485	.442	.435	.440	.455	.408	.445
09	.421	.440	.447	.497	.451	.439	.422	.462	.402	.436
10	.404	.450	.430	.501	.446	.439	.415	.478	.397	.427
11	.382	.446	.418	.484	.437	.434	.413	.459	.379	.421
12	.366	.437	.412	.486	.439	.432	.412	.440	.370	.430
13	.343	.427	.411	.488	.445	.454	.400	.433	.369	.423
14	.365	.430	.414	.488	.446	.453	.398	.432	.366	.405
15	.387	.443	.421	.480	.451	.436	.412	.429	.349	.381
16	.398	.463	.433	.470	.441	.447	.435	.428	.335	.363
17	.412	.469	.432	.467	.415	.425	.442	.420	.322	.348
18	.400	.479	.428	.453	.403	.408	.428	.398	.316	.347
19	.395	.471	.427	.441	.411	.410	.419	.407	.317	.361
20	.399	.445	.412	.441	.416	.423	.415	.407	.319	.365
21	.406	.415	.400	.438	.416	.417	.410	.410	.322	.371
22	.390	.407	.411	.440	.412	.415	.384	.414	.322	.342
23	.384	.377	.409	.442	.407	.399	.384	.410	.302	.335
24	.366	.387	.420	.435	.414	.407	.381	.407	.283	.314
25	.380	.395	.410	.424	.407	.394	.380	.391	.311	.327
26	.390	.390	.387	.410	.400	.404	.386	.384	.335	.338
27	.399	.385	.392	.400	.398	.393	.388	.374	.327	.333
28	.388	.380	.398	.389	.395	.389	.375	.372	.308	.327
29	.363	.350	.384	.373	.402	.393	.352	.381	.291	.312
30	.343	.323	.361	.364	.387	.393	.346	.367	.261	.294
31	.345	.340	.366	.367	.381	.398	.344	.383	.310	.306
32	.348	.349	.368	.367	.368	.395	.340	.374	.324	.324
33	.344	.354	.377	.377	.378	.377	.326	.344	.322	.322
34	.337	.343	.376	.374	.361	.363	.343	.353	.313	.317
35	.330	.341	.370	.369	.352	.330	.362	.364	.297	.291
36	.345	.352	.376	.372	.355	.324	.379	.379	.284	.272
37	.344	.350	.387	.382	.367	.330	.379	.390	.268	.254
38	.344	.337	.384	.391	.361	.346	.383	.384	.269	.235
39	.347	.369	.382	.386	.365	.353	.382	.390	.283	.234
40	.359	.358	.369	.365	.382	.370	.374	.367	.301	.292
41	.351	.386	.376	.362	.391	.357	.381	.350	.326	.322
42	.349	.386	.397	.364	.391	.366	.386	.344	.335	.321
43	.357	.390	.415	.379	.391	.373	.386	.346	.323	.311
44	.342	.396	.416	.392	.379	.370	.399	.357	.321	.302
45	.346	.378	.411	.386	.361	.375	.400	.345	.328	.300
46	.357	.349	.400	.371	.358	.368	.393	.352	.321	.302
47	.366	.329	.368	.367	.329	.355	.388	.377	.326	.307
48	.364	.317	.326	.358	.311	.351	.373	.386	.332	.324
49	.368	.314	.319	.362	.306	.341	.354	.390	.325	.330
50	.372	.302	.323	.383	.303	.341	.346	.373	.317	.316
51	.374	.290	.326	.405	.313	.342	.342	.375	.307	.309
52	.368	.300	.329	.426	.335	.354	.337	.380	.301	.298
53	.351	.313	.317	.418	.361	.354	.343	.382	.314	.301
54	.325	.309	.329	.402	.351	.333	.319	.395	.327	.305
55	.316	.290	.334	.388	.345	.338	.303	.396	.329	.311
56	.315	.304	.358	.386	.361	.345	.303	.407	.333	.322
57	.318	.322	.374	.375	.379	.358	.326	.393	.342	.322
58	.301	.333	.379	.372	.373	.367	.319	.353	.319	.311
59	.305	.345	.371	.379	.371	.370	.308	.402	.309	.304
60	.302	.349	.345	.392	.359	.365	.302	.405	.311	.294

Run No. 68 ; v Component

Separation Distance (r)

K	1	4	5	13	20	21	34	50	54	65
00	.220	.182	.736,-1	.212	.564,-1	-.830,-1	-.284,-1	-.274,-1	-.390,-1	.122
01	.177	.172	.869,-1	.212	.413,-1	.235,-1	.359,-1	-.742,-1	-.298,-1	.414,-1
02	.130	.153	.946,-1	.206	.382,-1	.559,-1	-.830,-1	.424,-2	-.362,-1	.218,-2
03	.115	.140	.457,-1	.196	.355,-1	.102	-.882,-1	.192,-1	-.220,-2	-.456,-1
04	.107	.159	.423,-1	.185	.418,-1	.148	-.595,-1	.404,-1	.126,-1	-.436,-1
05	.136	.176	.522,-1	.183	.435,-1	.137	-.111	.417,-1	.106,-1	-.354,-1
06	.156	.181	.692,-1	.178	.520,-1	.132	-.867,-1	.226,-1	.176,-1	-.914,-2
07	.165	.193	.893,-1	.160	.568,-1	.101	-.395,-1	.385,-1	.316,-1	-.228,-1
08	.139	.190	.106	.173	.765,-1	.584,-1	-.780,-2	.383,-1	.360,-1	.288,-2
09	.113	.186	.954,-1	.177	.809,-1	.320,-1	.754,-2	.262,-1	.156,-1	-.133,-1
10	.950,-1	.180	.108	.182	.863,-1	-.110,-2	.243,-1	.148,-1	-.140,-1	.392,-2
11	.953,-1	.176	.124	.187	.905,-1	.142,-1	.485,-1	.130,-1	-.802,-2	.184,-1
12	.737,-1	.163	.118	.193	.964,-1	.372,-1	.446,-1	-.103,-1	.185,-1	.200,-1
13	.630,-1	.157	.121	.188	.107	.704,-1	.113,-1	-.250,-1	.523,-1	.219,-1
14	.585,-1	.177	.116	.168	.100	.753,-1	-.848,-2	-.445,-1	.867,-1	.526,-2
15	.553,-1	.187	.935,-1	.156	.896,-1	.562,-1	-.270,-1	-.439,-1	.778,-1	.271,-1
16	.612,-1	.191	.946,-1	.158	.806,-1	.316,-1	-.130,-1	-.361,-1	.959,-1	.691,-2
17	.536,-1	.193	.913,-1	.172	.768,-1	.535,-1	.171,-1	-.313,-1	.840,-1	-.124,-1
18	.704,-1	.194	.949,-1	.187	.753,-1	.778,-1	.246,-1	-.495,-1	.656,-1	-.576,-2
19	.752,-1	.190	.883,-1	.177	.673,-1	.757,-1	-.170,-1	-.543,-1	.424,-1	-.453,-2
20	.857,-1	.176	.800,-1	.171	.489,-1	.534,-1	-.311,-1	-.477,-1	.496,-1	.623,-3
21	.706,-1	.169	.910,-1	.158	.184,-1	.498,-1	-.416,-1	-.414,-1	.622,-1	.332,-1
22	.704,-1	.174	.107	.141	.541,-2	.346,-1	-.294,-1	-.320,-1	.614,-1	.250,-1
23	.754,-1	.211	.950,-1	.140	.139,-1	.124,-1	-.377,-1	-.224,-1	.393,-1	.390,-1
24	.786,-1	.242	.105	.153	.406,-1	-.284,-2	-.650,-1	-.362,-1	.157,-1	.312,-1
25	.739,-1	.246	.119	.160	.616,-1	.164,-1	-.984,-1	-.650,-1	.219,-1	.309,-1
26	.682,-1	.244	.126	.157	.701,-1	.183,-1	-.114	-.673,-1	.393,-1	.660,-2
27	.780,-1	.252	.749,-1	.165	.682,-1	.268,-1	-.841,-1	-.612,-1	.156,-1	-.486,-1
28	.797,-1	.247	.758,-1	.161	.822,-1	.419,-1	-.516,-1	-.540,-1	.112,-1	-.670,-1
29	.896,-1	.230	.822,-1	.160	.826,-1	.476,-1	-.892,-2	-.389,-1	.224,-1	-.948,-1
30	.102	.207	.103	.137	.887,-1	.745,-1	-.254,-2	-.406,-1	.171,-1	-.511,-1
31	.110	.189	.852,-1	.139	.977,-1	.103	-.543,-2	-.648,-1	.331,-1	-.155,-1
32	.129	.194	.456,-1	.133	.125	.889,-1	-.217,-2	-.386,-1	.444,-1	-.234,-1
33	.143	.174	.656,-1	.123	.147	.937,-1	.635,-2	.689,-2	.409,-1	.382,-1
34	.149	.162	.735,-1	.122	.160	.644,-1	.119,-1	.209,-1	.166,-1	.686,-2
35	.110	.153	.644,-1	.123	.159	.362,-1	.650,-3	.288,-1	-.772,-2	-.184,-1
36	.914,-1	.149	.836,-1	.128	.152	.134,-1	-.397,-1	.101,-1	.205,-2	-.413,-1
37	.860,-1	.139	.106	.131	.151	.349,-1	-.587,-1	.216,-1	.317,-2	-.501,-1
38	.754,-1	.128	.125	.147	.128	.603,-1	-.464,-1	.133,-1	-.154,-1	-.357,-1
39	.653,-1	.123	.116	.141	.124	.802,-1	-.196,-1	-.166,-2	-.237,-1	-.327,-2
40	.594,-1	.118	.870,-1	.140	.116	.870,-1	.270,-1	-.375,-1	-.125,-2	.361,-1
41	.359,-1	.112	.615,-1	.142	.105	.784,-1	.329,-1	-.816,-1	.214,-1	.553,-1
42	.254,-1	.110	.726,-1	.131	.954,-1	.917,-1	.537,-1	-.967,-1	.360,-1	.475,-1
43	-.589,-2	.116	.108	.108	.945,-1	.996,-1	.383,-1	-.107	.251,-1	.623,-2
44	-.203,-1	.112	.133	.826,-1	.961,-1	.105	-.528,-2	-.926,-1	.194,-1	-.361,-1
45	-.218,-1	.116	.145	.691,-1	.105	.101	-.101,-1	-.471,-1	.749,-2	-.393,-1
46	-.501,-2	.117	.135	.573,-1	.109	.687,-1	-.169,-1	-.568,-1	.146,-1	.182,-1
47	.141,-1	.127	.130	.543,-1	.109	.207,-1	-.488,-1	-.510,-1	.234,-1	.302,-1
48	.422,-1	.138	.146	.504,-1	.986,-1	.164,-2	-.918,-1	-.384,-1	.695,-2	.456,-1
49	.725,-1	.155	.141	.598,-1	.894,-1	.945,-3	-.945,-1	-.306,-1	-.324,-2	.487,-1
50	.642,-1	.179	.151	.786,-1	.746,-1	.174,-1	-.550,-1	-.165,-1	.129,-1	.197,-1
51	.646,-1	.206	.134	.960,-1	.563,-1	.112,-1	.468,-2	-.223,-1	.374,-1	.294,-2
52	.371,-1	.221	.101	.132	.523,-1	.249,-1	.475,-1	-.342,-1	.465,-1	-.173,-1
53	.198,-1	.224	.848,-1	.165	.368,-1	.382,-1	.367,-1	-.513,-1	.201,-1	-.598,-1
54	-.596,-2	.224	.775,-1	.171	.296,-1	.480,-1	.175,-1	-.545,-1	.891,-3	-.779,-1
55	-.391,-1	.203	.780,-1	.158	.386,-1	.623,-1	.351,-2	-.560,-1	.660,-2	-.311,-1
56	-.165,-1	.162	.105	.152	.507,-1	.588,-1	-.161,-1	-.612,-1	.223,-1	.164 -1
57	-.195,-1	.127	.102	.122	.617,-1	.501,-1	-.273,-1	-.527,-1	.339,-1	.400,-2
58	-.201,-2	.786,-1	.950,-1	.110	.479,-1	.410,-1	-.396,-1	-.495,-1	-.178,-2	-.205,-1
59	.206,-1	.532,-1	.107	.107	.252,-1	.361,-1	-.475,-1	-.393,-1	-.241,-1	-.176,-1
60	.200,-1	.371,-1	.134	.114	.631,-2	.643,-1	-.686,-1	-.343,-1	-.426,-1	-.179,-1

TABLE 17.8

Cross-correlation coefficients, T_K^-, lagged upwind for N-S orientation of anemometer line; to the west for E-W orientation. The results are identified by eddy wind component; lag number, K; and separation distance of anemometer pairs. (Pages 485 to 546.) To convert K to a time lag, multiply by $\triangle t = 1.067$ seconds.

Run No. 6 ; u component

Y		Separation Distance (m.)								
		12	18	24	36	42	48	72	84	90
00	.673	.490	.494	.419	.371	.353	.245	.118	.131	.147
01	.851	.430	.418	.354	.293	.321	.223	.116	.110	.130
02	.623	.352	.369	.281	.254	.257	.221	.105	.104	.120
03	.493	.325	.314	.194	.228	.220	.202	.890,-1	.920,-1	.105
04	.453	.258	.279	.153	.201	.223	.171	.582,-1	.815,-1	.936,-1
05	.388	.193	.220	.131	.176	.210	.117	.467,-1	.660,-1	.913,-1
06	.328	.174	.182	.123	.136	.178	.100	.258,-1	.559,-1	.793,-1
07	.286	.153	.175	.115	.131	.149	.753,-1	.193,-1	.701,-1	.838,-1
08	.249	.140	.166	.105	.120	.146	.856,-1	.427,-1	.865,-1	.971,-1
09	.223	.115	.142	.106	.105	.126	.768,-1	.370,-1	.976,-1	.873,-1
10	.198	.859,-1	.101	.516,-1	.114	.114	.768,-1	.547,-1	.106	.880,-1
11	.183	.564,-1	.604,-1	.638,-1	.110	.129	.495,-1	.644,-1	.131	.998,-1
12	.155	.581,-1	.640,-1	.856,-1	.897,-1	.130	.303,-1	.604,-1	.149	.135
13	.122	.297,-1	.468,-1	.731,-1	.928,-1	.109	.303,-1	.912,-1	.156	.134
14	.991,-1	.392,-1	.376,-1	.908,-1	.950,-1	.105	.458,-1	.122	.136	.128
15	.114	.336,-1	.462,-1	.868,-1	.902,-1	.103	.294,-1	.129	.117	.120
16	.127	.502,-1	.487,-1	.628,-1	.740,-1	.923,-1	.464,-1	.147	.000,-1	.116
17	.115	.569,-1	.633,-1	.307,-1	.802,-1	.928,-1	.376,-1	.123	.925,-1	.930,-1
18	.111	.794,-1	.733,-1	.234,-1	.833,-1	.940,-1	.400,-1	.832,-1	.780,-1	.101
19	.111	.955,-1	.111	.318,-1	.108	.106	.574,-1	.844,-1	.652,-1	.964,-1
20	.108	.850,-1	.119	.741,-1	.112	.125	.299,-1	.634,-1	.614,-1	.812,-1
21	.133	.927,-1	.115	.788,-1	.109	.116	.148,-2	.332,-1	.453,-1	.758,-1
22	.138	.878,-1	.969,-1	.107	.102	.106	.101,-1	.270,-1	.432,-1	.590,-1
23	.140	.768,-1	.679,-1	.969,-1	.105	.104	.502,-2	.184,-1	.395,-1	.634,-1
24	.115	.889,-1	.583,-1	.851,-1	.827,-1	.684,-1	.241,-1	.219,-1	.300,-1	.573,-1
25	.113	.953,-1	.705,-1	.697,-1	.845,-1	.855,-1	.975,-2	.201,-1	.190,-1	.346,-1
26	.988,-1	.880,-1	.718,-1	.321,-1	.778,-1	.106	.738,-2	.000	.203,-1	.649,-2
27	.956,-1	.627,-1	.805,-1	.393,-1	.135,-1	.853,-1	.190,-1	-.676,-2	.364,-1	.224,-1
28	.117	.324,-1	.594,-1	.534,-1	-.714,-2	.523,-1	.319,-1	.223,-1	.484,-2	.224,-1
29	.122	.274,-1	.427,-1	.851,-2	-.632,-2	.221,-1	.281,-1	.159,-1	.104,-2	.133,-1
30	.875,-1	.170,-2	.584,-1	-.208,-1	.778,-2	.107,-1	.388,-1	.133,-1	.110,-1	.184,-1
31	.772,-1	-.998,-3	.124,-1	-.193,-1	.245,-1	.146,-1	.541,-1	.405,-1	.349,-1	.282,-1
32	.808,-1	.199,-1	-.365,-2	-.156,-1	.223,-1	.233,-1	.255,-1	.536,-1	.317,-1	.546,-1
33	.528,-1	.270,-1	.160,-1	-.236,-1	.413,-1	.307,-1	.177,-1	.774,-1	.442,-1	.575,-1
34	.455,-1	-.240,-2	.823,-2	-.193,-1	.460,-1	.567,-1	.775,-2	.693,-1	.731,-1	.687,-1
35	.531,-1	.147,-1	-.702,-2	.247,-2	.451,-1	.519,-1	.226,-1	.676,-1	.783,-1	.875,-1
36	.701,-1	.357,-1	.468,-3	-.218,-2	.481,-1	.547,-1	.484,-1	.769,-1	.756,-1	.771,-1
37	.638,-1	.543,-1	.200,-1	.524,-2	.617,-1	.416,-1	.588,-1	.879,-1	.408,-1	.332,-1
38	.695,-1	.814,-1	.500,-1	.343,-1	-.943,-2	.553,-1	.642,-1	.987,-1	.497,-1	.789,-2
39	.920,-1	.730,-1	.689,-1	.380,-1	.645,-1	.786,-1	.600,-1	.980,-1	.668,-1	.397,-1
40	.849,-1	.791,-1	.843,-1	.264,-1	.862,-1	.680,-1	.460,-1	.909,-1	.460,-1	.545,-1
41	.101	.765,-1	.851,-1	.415,-1	.772,-1	.104	.529,-1	.878,-1	.527,-1	.503,-1
42	.121	.677,-1	.702,-1	.537,-1	.721,-1	.903,-1	.778,-1	.978,-1	.590,-1	.640,-1
43	.136	.625,-1	.573,-1	.515,-1	.521,-1	.622,-1	.419,-1	.108	.397,-1	.548,-1
44	.114	.655,-1	.641,-1	.520,-1	.266,-1	.479,-1	.329,-1	.937,-1	.356,-1	.556,-1
45	.109	.665,-1	.693,-1	.422,-1	.142,-1	.353,-1	.506,-1	.119	.448,-1	.379,-1
46	.878,-1	.427,-1	.583,-1	.418,-1	.161,-1	.249,-1	.488,-1	.131	.460,-1	.395,-1
47	.101	.508,-1	.413,-1	.324,-1	.386,-1	.180,-1	.346,-1	.124	.415,-1	.374,-1
48	.868,-1	.696,-1	.580,-1	.532,-1	.189,-1	.416,-1	.541,-1	.117	.356,-1	.272,-1
49	.806,-1	.660,-1	.695,-1	.642,-1	.139,-1	.380,-1	.545,-1	.776,-1	.432,-1	.251,-1
50	.861,-1	.600,-1	.747,-1	.675,-1	.284,-2	.353,-1	.376,-1	.649,-1	.496,-1	.634,-1
51	.690,-1	.476,-1	.593,-1	.623,-1	-.211,-2	.225,-1	.191,-1	.655,-1	.493,-1	.580,-1
52	.982,-1	.220,-1	.553,-1	.730,-1	.175,-1	.263,-1	.101,-1	.664,-1	.649,-1	.624,-1
53	.748,-1	.359,-2	.311,-1	.808,-1	.225,-1	.394,-1	.147,-1	.927,-1	.723,-1	.723,-1
54	.617,-1	.127,-1	.224,-1	.742,-1	.797,-2	.303,-1	.198,-1	.115	.762,-1	.816,-1
55	.611,-1	-.859,-2	.113,-1	.719,-1	-.125,-1	.832,-2	.870,-2	.105	.675,-1	.874,-1
56	.615,-1	-.189,-1	-.231,-3	.717,-1	.143,-1	-.257,-3	.267,-1	.934,-1	.798,-1	.916,-1
57	.651,-1	-.879,-2	-.262,-1	.818,-1	.365,-1	.258,-1	.578,-1	.103	.805,-1	.942,-1
58	.584,-1	.699,-2	-.393,-2	.108	.490,-1	.396,-1	.456,-1	.889,-1	.818,-1	.876,-1
59	.670,-1	.919,-2	.627,-2	.104	.612,-1	.569,-1	.666,-1	.906,-1	.741,-1	.847,-1
60	.755,-1	.300,-1	.303,-1	.118	.785,-1	.779,-1	.531,-1	.823,-1	.705,-1	.801,-1

Run No. 6 ; v component

K	Separation Distance (m.)									
	6	12	18	24	36	42	48	72	84	90
00	.702	.547	.585	.683	.530	.548	.495	.487	.456	.458
01	.775	.525	.531	.613	.516	.531	.502	.473	.429	.460
02	.635	.512	.524	.601	.509	.535	.489	.476	.418	.429
03	.573	.463	.519	.559	.483	.497	.462	.471	.398	.444
04	.538	.471	.475	.527	.467	.485	.473	.448	.395	.417
05	.508	.446	.459	.520	.450	.485	.457	.442	.388	.406
06	.513	.422	.463	.518	.419	.466	.433	.432	.382	.395
07	.503	.427	.440	.489	.433	.461	.420	.414	.368	.390
08	.479	.409	.450	.497	.413	.445	.406	.405	.364	.379
09	.444	.412	.435	.491	.404	.421	.392	.408	.362	.387
10	.437	.385	.404	.480	.411	.425	.372	.399	.380	.382
11	.431	.393	.405	.423	.408	.406	.381	.386	.331	.376
12	.426	.393	.392	.433	.385	.405	.372	.372	.320	.359
13	.404	.389	.392	.421	.373	.401	.372	.367	.286	.322
14	.392	.377	.376	.414	.390	.399	.357	.372	.261	.296
15	.367	.356	.384	.399	.369	.414	.356	.344	.247	.278
16	.371	.367	.398	.391	.362	.387	.327	.315	.257	.284
17	.384	.368	.392	.397	.340	.387	.324	.287	.221	.260
18	.374	.336	.377	.412	.339	.368	.283	.266	.217	.248
19	.376	.331	.340	.386	.325	.326	.282	.261	.212	.239
20	.384	.328	.331	.364	.279	.294	.254	.266	.214	.230
21	.346	.301	.340	.330	.260	.283	.244	.242	.225	.243
22	.334	.280	.303	.318	.273	.256	.231	.258	.222	.256
23	.312	.272	.294	.310	.254	.253	.244	.245	.217	.252
24	.301	.281	.275	.263	.250	.277	.235	.255	.208	.242
25	.285	.271	.276	.257	.222	.262	.253	.252	.212	.220
26	.284	.252	.285	.283	.207	.243	.256	.236	.202	.217
27	.231	.243	.260	.265	.199	.230	.217	.233	.200	.198
28	.249	.226	.252	.237	.195	.214	.211	.214	.197	.215
29	.240	.230	.246	.248	.191	.228	.201	.212	.216	.211
30	.253	.219	.247	.233	.206	.228	.200	.205	.185	.213
31	.212	.214	.240	.218	.201	.223	.193	.224	.171	.198
32	.204	.215	.233	.217	.189	.204	.193	.216	.155	.174
33	.212	.232	.221	.205	.189	.204	.199	.223	.149	.142
34	.211	.201	.240	.210	.209	.204	.205	.206	.132	.150
35	.202	.221	.228	.200	.206	.210	.185	.175	.133	.143
36	.201	.209	.237	.205	.196	.216	.183	.181	.115	.140
37	.170	.196	.215	.210	.186	.205	.142	.172	.111	.135
38	.185	.173	.187	.223	.162	.186	.130	.162	.126	.148
39	.180	.186	.197	.223	.134	.182	.120	.130	.129	.130
40	.177	.149	.194	.224	.135	.155	.101	.115	.119	.131
41	.177	.153	.176	.192	.121	.145	.923,-1	.131	.120	.126
42	.158	.121	.164	.181	.127	.139	.893,-1	.146	.127	.137
43	.158	.126	.128	.166	.115	.115	.103	.172	.105	.126
44	.144	.113	.142	.159	.108	.121	.120	.163	.107	.116
45	.116	.123	.121	.144	.967,-1	.107	.125	.133	.109	.113
46	.125	.115	.137	.143	.704,-1	.960,-1	.116	.131	.935,-1	.954,-1
47	.990,-1	.867,-1	.117	.139	.472,-1	.915,-1	.117	.124	.896,-1	.916,-1
48	.999,-1	.689,-1	.103	.115	.593,-1	.699,-1	.883,-1	.138	.109	.977,-1
49	.104	.594,-1	.699,-1	.108	.673,-1	.780,-1	.102	.126	.108	.109
50	.827,-1	.773,-1	.871,-1	.107	.604,-1	.775,-1	.998,-1	.114	.109	.125
51	.618,-1	.637,-1	.103	.835,-1	.653,-1	.684,-1	.120	.112	.967,-1	.905,-1
52	.523,-1	.584,-1	.873,-1	.897,-1	.693,-1	.718,-1	.117	.120	.778,-1	.801,-1
53	.408,-1	.782,-1	.588,-1	.974,-1	.693,-1	.588,-1	.136	.117	.908,-1	.654,-1
54	.657,-1	.959,-1	.864,-1	.924,-1	.629,-1	.696,-1	.117	.133	.849,-1	.731,-1
55	.572,-1	.919,-1	.916,-1	.965,-1	.552,-1	.484,-1	.135	.105	.920,-1	.634,-1
56	.274,-1	.890,-1	.668,-1	.102	.631,-1	.584,-1	.119	.979,-1	.955,-1	.816,-1
57	.133,-1	.867,-1	.859,-1	.868,-1	.664,-1	.588,-1	.959,-1	.857,-1	.925,-1	.115
58	.157,-1	.932,-1	.693,-1	.721,-1	.613,-1	.732,-1	.108	.925,-1	.686,-1	.811,-1
59	.262,-1	.105	.667,-1	.623,-1	.472,-1	.513,-1	.109	.951,-1	.705,-1	.923,-1
60	.352,-1	.101	.102	.745,-1	.571,-1	.413,-1	.107	.108	.911,-1	.903,-1

Run No. 7 ; u component

K	Separation Distance (m.) 6	12	18	24	36	42	48	72	84	90
00	.860	.799	.772	.684	.649	.632	.577	.481	.445	.456
01	.861	.771	.758	.671	.633	.622	.563	.462	.438	.440
02	.838	.749	.744	.651	.624	.614	.543	.447	.426	.427
03	.816	.726	.730	.634	.599	.605	.524	.432	.415	.414
04	.787	.707	.718	.620	.581	.592	.509	.421	.407	.408
05	.757	.698	.704	.609	.558	.575	.487	.416	.391	.392
06	.731	.681	.695	.590	.538	.562	.470	.414	.379	.379
07	.706	.665	.675	.573	.515	.543	.456	.400	.363	.364
08	.687	.642	.655	.560	.503	.524	.441	.384	.353	.354
09	.669	.622	.635	.550	.485	.506	.431	.369	.325	.334
10	.654	.605	.616	.527	.473	.486	.412	.360	.304	.318
11	.639	.585	.601	.506	.458	.470	.388	.355	.288	.301
12	.625	.559	.581	.482	.442	.453	.376	.338	.277	.296
13	.616	.544	.556	.473	.421	.432	.362	.322	.262	.290
14	.598	.532	.530	.454	.400	.413	.351	.309	.255	.284
15	.580	.507	.503	.437	.383	.394	.335	.299	.248	.278
16	.561	.484	.482	.432	.359	.375	.322	.287	.245	.279
17	.543	.453	.460	.418	.338	.360	.316	.283	.246	.277
18	.529	.424	.439	.403	.324	.344	.304	.278	.242	.267
19	.516	.403	.425	.385	.314	.340	.292	.274	.237	.253
20	.492	.388	.410	.378	.305	.333	.278	.271	.232	.244
21	.468	.371	.394	.371	.294	.327	.267	.264	.226	.234
22	.451	.354	.377	.364	.287	.315	.258	.254	.215	.226
23	.425	.340	.355	.360	.285	.306	.256	.250	.199	.223
24	.402	.333	.341	.356	.283	.295	.243	.239	.188	.214
25	.383	.327	.329	.350	.278	.281	.231	.228	.179	.199
26	.363	.314	.307	.336	.275	.265	.220	.214	.175	.200
27	.340	.299	.285	.331	.264	.254	.205	.200	.160	.195
28	.318	.283	.273	.323	.245	.256	.192	.202	.153	.190
29	.295	.266	.260	.308	.234	.232	.176	.189	.149	.182
30	.277	.255	.244	.288	.216	.223	.170	.188	.153	.172
31	.268	.240	.228	.267	.204	.217	.156	.183	.156	.167
32	.256	.222	.214	.249	.198	.215	.148	.182	.148	.166
33	.237	.206	.201	.232	.182	.212	.147	.177	.144	.163
34	.227	.196	.192	.225	.168	.200	.147	.175	.144	.150
35	.219	.181	.187	.212	.156	.193	.142	.165	.138	.141
36	.211	.167	.178	.209	.156	.181	.142	.169	.134	.134
37	.195	.154	.174	.202	.154	.175	.136	.162	.128	.130
38	.182	.145	.164	.203	.141	.174	.120	.156	.122	.121
39	.176	.135	.158	.189	.130	.169	.109	.150	.100	.110
40	.163	.120	.138	.177	.124	.152	.968,-1	.146	.750,-1	.985,-1
41	.153	.115	.129	.170	.126	136	.873,-1	.142	.657,-1	.846,-1
42	.141	.106	.125	.172	.118	.135	.887,-1	.135	.594,-1	.773,-1
43	.127	.891,-1	.113	.167	.112	.130	.876,-1	.128	.554,-1	.742,-1
44	.118	.788,-1	.950,-1	.165	.104	.113	.846,-1	.120	.571,-1	.786,-1
45	.104	.527,-1	.716,-1	.162	.102	.111	.817,-1	.115	.536,-1	.711,-1
46	.913,-1	.480,-1	.645,-1	.150	.891,-1	.115	.853,-1	.109	.557,-1	.647,-1
47	.924,-1	.436,-1	.610,-1	.135	.781,-1	.116	.890,-1	.996,-1	.552,-1	.563,-1
48	.804,-1	.328,-1	.501,-1	.121	.671,-1	.104	.672,-1	.902,-1	.528,-1	.624,-1
49	.616,-1	.200,-1	.388,-1	.114	.649,-1	.100	.525,-1	.761,-1	.512,-1	.609,-1
50	.477,-1	.121,-1	.321,-1	.109	.575,-1	.808,-1	.408,-1	.786,-1	.567,-1	.599,-1
51	.374,-1	.143,-1	.309,-1	.112	.510,-1	.785,-1	.236,-1	.739,-1	.506,-1	.557,-1
52	.255,-1	.183,-1	.254,-1	.116	.425,-1	.709,-1	.210,-1	.694,-1	.360,-1	.484,-1
53	.188,-1	.231,-1	.279,-1	.104	.344,-1	.610,-1	.270,-1	.668,-1	.193,-1	.336,-1
54	.131,-1	.196,-1	.173,-1	.957,-1	.330,-1	.547,-1	.253,-1	.612,-1	.120,-1	.257,-1
55	.726,-2	.890,-2	.133,-1	.889,-1	.334,-1	.351,-1	.295,-1	.586,-1	.350,-2	.288,-1
56	-.900,-3	.430,-2	.840,-2	.799,-1	.307,-1	.544,-1	.394,-1	.609,-1	-.380,-2	.227,-1
57	-.700,-2	-.770,-2	-.210,-2	.677,-1	.266,-1	.444,-1	.470,-1	.605,-1	.450,-2	.216,-1
58	-.211,-1	-.194,-1	-.157,-1	.656,-1	.252,-1	.416,-1	.590,-1	.638,-1	.204,-1	.249,-1
59	-.307,-1	-.324,-1	-.227,-1	.649,-1	.194,-1	.321,-1	.644,-1	.364,-1	.307,-1	.337,-1
60	-.328,-1	-.408,-1	-.244,-1	.555,-1	.138,-1	.248,-1	.730,-1	.515,-1	.397,-1	.437,-1

Run No. 7 ; v component

Separation Distance (m.)

K	6	12	18	24	36	42	48	72	84	90
00	.908	.850	.810	.795	.744	.727	-.238,-2	.597	.550	.541
01	.879	.827	.793	.782	.734	.719	-.700,-2	.594	.545	.528
02	.846	.805	.782	.767	.721	.703	-.750,-2	.586	.529	.517
03	.816	.795	.774	.758	.704	.691	-.381,-1	.579	.519	.509
04	.788	.775	.759	.740	.695	.681	-.105	.569	.502	.492
05	.768	.763	.746	.721	.683	.671	-.572,-1	.559	.487	.475
06	.759	.747	.730	.709	.669	.661	-.776,-1	.551	.473	.460
07	.742	.730	.711	.694	.659	.649	-.652,-1	.541	.458	.440
08	.731	.709	.696	.677	.648	.637	-.540,-1	.533	.449	.425
09	.719	.697	.683	.667	.635	.628	-.867,-1	.512	.434	.412
10	.715	.681	.676	.661	.620	.612	-.118	.500	.422	.405
11	.704	.673	.664	.654	.610	.596	-.140	.480	.412	.395
12	.698	.661	.653	.645	.594	.578	-.888,-1	.472	.399	.384
13	.685	.652	.649	.633	.581	.571	-.966,-1	.463	.393	.376
14	.667	.643	.639	.618	.569	.557	-.124	.449	.379	.368
15	.659	.635	.626	.606	.558	.539	-.117	.442	.375	.357
16	.650	.627	.616	.597	.546	.519	-.134	.432	.369	.341
17	.642	.619	.600	.588	.531	.504	-.119	.424	.357	.330
18	.635	.612	.590	.579	.520	.487	-.768,-1	.416	.349	.323
19	.623	.604	.579	.573	.507	.482	-.931,-1	.406	.344	.319
20	.616	.591	.563	.569	.505	.474	-.824,-1	.400	.332	.308
21	.601	.575	.550	.558	.506	.474	-.809,-1	.385	.323	.302
22	.592	.554	.530	.552	.500	.469	-.912,-1	.367	.308	.293
23	.576	.540	.521	.553	.495	.457	-.671,-1	.355	.308	.287
24	.561	.534	.512	.546	.479	.449	-.946,-1	.338	.297	.269
25	.553	.525	.506	.538	.469	.439	-.725,-1	.330	.287	.266
26	.548	.518	.504	.531	.459	.433	-.488,-1	.319	.275	.256
27	.543	.519	.498	.511	.450	.425	-.714,-1	.314	.266	.244
28	.536	.507	.489	.499	.445	.418	-.108	.299	.255	.243
29	.532	.498	.482	.486	.439	.412	-.110	.291	.250	.228
30	.514	.489	.473	.479	.433	.406	-.786,-1	.286	.234	.219
31	.507	.481	.471	.472	.425	.400	-.987,-1	.277	.227	.204
32	.496	.477	.456	.463	.411	.392	-.126	.268	.214	.194
33	.485	.466	.447	.451	.405	.387	-.103	.256	.195	.187
34	.475	.465	.441	.441	.394	.380	-.119	.241	.183	.178
35	.469	.461	.436	.428	.387	.374	-.931,-1	.231	.176	.166
36	.467	.450	.428	.414	.373	.364	-.134	.217	.169	.158
37	.460	.443	.418	.410	.363	.355	-.121	.210	.165	.148
38	.452	.430	.418	.397	.358	.349	-.131	.205	.157	.138
39	.447	.420	.409	.390	.351	.338	-.121	.188	.148	.138
40	.437	.414	.405	.377	.343	.334	-.116	.176	.136	.130
41	.435	.408	.396	.367	.335	.330	-.147	.168	.121	.119
42	.425	.400	.391	.360	.323	.322	-.159	.169	.114	.113
43	.416	.387	.385	.350	.316	.314	-.151	.156	.104	.990,-1
44	.408	.380	.385	.344	.311	.304	-.124	.144	.910,-1	.930,-1
45	.400	.380	.378	.337	.306	.297	-.108	.133	.840,-1	.830,-1
46	.392	.369	.371	.326	.300	.290	-.121	.119	.770,-1	.810,-1
47	.390	.368	.361	.321	.294	.285	-.994,-1	.110	.760,-1	.810,-1
48	.385	.361	.357	.317	.290	.277	-.129	.970,-1	.770,-1	.860,-1
49	.376	.353	.347	.315	280	.269	-.161	.900,-1	.720,-1	.820,-1
50	.374	.338	.332	.310	.275	.264	-.154	.870,-1	.690,-1	.770,-1
51	.365	.326	.316	.300	.266	.259	-.157	.810,-1	.610,-1	.730,-1
52	.351	.310	.308	.295	.261	.251	-.195	.720,-1	.560,-1	.660,-1
53	.333	.305	.297	.291	.258	.239	-.158	.650,-1	.560,-1	.570,-1
54	.324	.300	.295	.282	.242	.227	-.145	.630,-1	.450,-1	.440,-1
55	.309	.296	.294	.279	.230	.223	-.162	.560,-1	.390,-1	.390,-1
56	.297	.291	.285	.270	.220	.212	-.143	.480,-1	.340,-1	.340,-1
57	.296	.279	.272	.261	.213	.205	-.110	.450,-1	.270,-1	.210,-1
58	.292	.269	.256	.252	.205	.199	-.114	.380,-1	.160,-1	.140,-1
59	.283	.253	.250	.239	.194	.199	-.108	.330,-1	.500,-2	.500,-2
60	.263	.236	.239	.228	.191	.193	-.115	.220,-1	-.100,-2	-.300,-2

Run No. 7 ; w component

K	Separation Distance (m.)									
	6	12	18	24	36	42	48	72	84	90
00	.110	.148,-1	.619,-1	-.457,-2	-.755,-2	.496,-2	.676	.300,-3	-.366,-1	-.486,-1
01	.668,-1	.249,-1	.645,-1	.157,-1	-.350,-1	.102,-1	.673	.986,-2	-.237,-1	-.160,-1
02	.913,-1	.172,-1	.348,-1	.186,-1	-.179,-1	.208,-1	.682	-.392,-1	-.924,-2	-.336,-1
03	.543,-1	.282,-1	.522,-1	.212,-1	.347,-2	.261,-2	.663	-.123,-1	-.165,-1	-.166,-1
04	.520,-1	-.327,-2	.201,-1	-.440,-2	.342,-1	.189,-2	.690	.600,-2	.101,-1	-.128,-1
05	-.730,-2	.148,-1	.364,-1	-.740,-2	.460,-2	.605,-1	.647	-.500,-3	.206,-1	-.262,-1
06	-.481,-1	-.149,-1	.355,-1	.185,-1	.330,-2	.608,-1	.673	.137,-1	.223,-1	.382,-1
07	.114,-1	.238,-1	.303,-1	-.161,-1	.111,-1	.601,-1	.697	-.243,-1	.197,-1	.149,-1
08	.255,-1	.190,-2	.165,-1	.310,-2	.160,-1	.191,-1	.701	-.192,-1	.618,-1	-.678,-2
09	.486,-1	-.212,-1	.373,-1	-.222,-1	-.242,-1	.273,-1	.668	-.186,-1	.967,-2	.248,-1
10	.283,-1	.627,-2	-.258,-2	-.181,-1	.114,-1	.110,-1	.682	-.301,-1	-.455,-1	.346,-1
11	.277,-1	.264,-1	.967,-1	.320,-3	-.196,-1	.131,-1	.661	.213,-1	-.342,-1	.151,-1
12	.598,-1	.370,-2	.549,-1	.414,-1	-.433,-1	.790,-2	.664	-.151,-1	.152,-1	.178,-1
13	.184,-1	.182,-1	.288,-1	-.193,-1	-.339,-1	-.548,-1	.651	.126,-2	-.134,-1	-.109,-1
14	.239,-1	.339,-1	-.425,-1	-.699,-2	.626,-2	-.426,-1	.637	-.544,-1	-.190,-2	.970,-2
15	.320,-1	.116,-1	.182,-1	-.603,-1	-.843,-2	-.577,-1	.615	.381,-1	-.539,-1	.231,-1
16	.103,-1	.200,-1	.820,-1	.800,-2	-.444,-1	-.215,-1	.617	-.200,-1	.257,-1	.389,-1
17	-.419,-1	.291,-1	.339,-1	-.410,-1	-.250,-2	.579,-2	.590	.641,-1	.294,-2	.136,-1
18	.550,-3	-.519,-1	-.921,-2	.150,-2	.157,-1	.780,-2	.560	-.237,-1	-.204,-1	.248,-1
19	.924,-2	-.102,-1	.433,-1	-.183,-1	.363,-1	.715,-2	.561	-.175,-1	-.427,-1	-.910,-2
20	.480,-2	.690,-2	.282,-1	-.274,-1	-.115,-1	-.604,-2	.534	-.184,-1	-.140,-1	.240,-1
21	.280,-1	-.127,-1	.324,-1	-.355,-1	-.108,-1	.385,-1	.552	-.912,-2	.182,-1	.112,-1
22	-.148,-1	-.750,-2	-.165,-1	-.400,-4	.321,-1	-.558,-1	.532	.260,-1	.826,-2	-.370,-1
23	.327,-1	-.419,-1	-.513,-1	.183,-1	.269,-1	-.499,-1	.538	.183,-1	.353,-1	-.474,-1
24	-.177,-1	-.778,-1	-.319,-1	.239,-1	.406,-2	-.492,-1	.541	.880,-2	.377,-1	-.362,-2
25	-.360,-1	-.958,-2	-.298,-1	.250,-1	.172,-1	-.538,-2	.521	-.975,-2	.857,-1	.533,-1
26	.108,-1	-.114,-1	.383,-1	.322,-1	.480,-1	-.289,-1	.525	-.680,-2	.740,-1	-.893,-3
27	-.174,-1	.171,-1	-.118,-1	.286,-1	.323,-1	.500,-3	.502	-.345,-1	.349,-1	-.800,-3
28	.130,-2	-.386,-1	-.903,-2	.215,-1	.100,-3	-.340,-1	.479	.700,-3	-.200,-2	.484,-1
29	.105,-1	-.201,-1	.232,-1	.432,-1	.548,-1	-.201,-1	.466	.493,-1	.370,-1	-.368,-1
30	.431,-1	-.159,-1	.630,-2	.443,-1	.598,-1	.245,-1	.452	.262,-1	.240,-1	-.759,-1
31	.111,-1	-.428,-1	.125,-1	.229,-1	.235,-1	-.105,-1	.441	.122,-1	.873,-1	.475,-2
32	.261,-1	-.570,-2	.490,-2	-.117,-1	.323,-1	-.266,-1	.416	-.600,-3	.782,-1	-.640,-3
33	-.300,-3	.557,-1	-.184,-1	-.355,-1	-.178,-1	.552,-1	.402	-.313,-1	.543,-1	-.179,-1
34	.446,-1	.590,-2	-.104,-1	-.269,-1	.206,-1	.908,-2	.438	-.392,-1	.927,-1	.141,-1
35	.390,-1	.221,-1	.174,-2	-.127,-1	.115,-1	-.269,-1	.400	-.197,-1	.230,-1	.600,-1
36	.248,-1	-.498,-2	-.214,-1	-.142,-1	-.250,-2	-.332,-1	.385	-.460,-2	.551,-2	.150,-1
37	-.560,-2	-.220,-1	.398,-1	.216,-1	-.485,-1	-.638,-1	.402	.618,-1	.509,-1	.175,-1
38	.293,-1	.383,-1	.319,-1	-.190,-2	-.338,-1	-.368,-1	.380	-.260,-2	.468,-1	.275,-1
39	.918,-2	.478,-1	.454,-1	-.500,-2	-.601,-2	-.200,-1	.421	-.700,-3	-.380,-2	.170,-1
40	.583,-2	.377,-1	.166,-1	-.141,-1	-.498,-1	-.415,-1	.392	-.715,-1	-.492,-1	.119,-1
41	.173,-1	.867,-1	.225,-1	.307,-1	-.310,-2	.140,-1	.392	-.834,-1	-.427,-1	.279,-1
42	.525,-1	.226,-1	-.170,-1	.543,-2	.305,-1	.116,-1	.407	-.329,-1	-.769,-1	-.380,-1
43	.581,-1	.106,-1	-.797,-2	-.458,-1	.295,-1	.848,-2	.402	.459,-1	-.836,-1	.457,-2
44	-.167,-1	.301,-1	-.465,-1	.417,-1	.288,-1	.504,-1	.358	.222,-1	-.728,-1	-.460,-2
45	-.510,-1	-.150,-1	-.175,-1	.823,-2	.265,-1	.344,-1	.329	.184 -1	-.527,-1	-.207,-1
46	-.442,-1	.237,-1	-.214,-1	-.288,-2	.122,-1	-.354,-1	.320	.466,-2	-.382,-1	-.510,-2
47	-.188,-2	.107,-1	.530,-2	-.646,-2	-.294,-1	-.597,-1	.288	.292,-1	.400,-2	-.181,-1
48	-.900,-3	.261,-1	-.107,-1	.532,-1	-.736,-1	-.202,-1	.253	-.115,-1	-.480,-1	-.124,-1
49	-.460,-2	.126,-1	-.520,-2	-.116,-1	-.443,-1	-.310,-1	.239	.116,-1	.201,-1	-.581,-1
50	-.151,-1	-.224,-1	.344,-1	.177,-2	-.170,-1	-.275,-1	.237	.267,-1	-.116,-1	-.306,-1
51	-.161,-1	-.209,-1	.434,-1	-.107,-1	-.529,-2	-.231,-1	.255	-.460,-2	-.258,-1	-.124,-1
52	-.825,-1	.323,-1	.630,-2	-.262,-1	-.124,-1	-.230,-1	.221	-.297,-1	.107,-1	-.699,-1
53	-.729,-1	.118,-1	-.443,-2	-.344,-1	.322,-1	.478,-1	.207	-.154,-1	-.113,-1	-.459,-1
54	-.396,-1	-.387,-1	-.195,-1	.245,-1	.534,-1	.493,-1	.167	.200,-1	-.160,-2	-.188,-1
55	-.299,-1	-.621,-1	.162,-1	.940,-3	.130,-1	.716,-1	.164	.246,-1	.888,-2	.222,-1
56	-.467,-1	-.395,-1	-.610,-2	-.246,-1	.162,-1	.300,-1	.159	.153,-1	.844,-2	-.631,-2
57	-.274,-1	.210,-3	-.262,-1	-.930,-2	.236,-1	.460,-2	.165	.225,-1	.372,-1	.630,-2
58	-.455,-1	-.500,-3	-.363,-1	-.460,-2	-.548,-2	-.279,-1	.169	.448,-2	.382,-1	.172,-1
59	-.478,-1	-.950,-2	.123,-1	-.316,-1	-.123,-1	-.699,-1	.144	.396,-1	.285,-2	-.349,-1
60	-.620,-1	-.105,-1	-.565,-1	.289,-1	-.388,-1	-.568,-1	.146	.441,-1	.221,-1	-.274,-1

Run No. 8 ; u component

Separation Distance (x)

K	6	12	18	24	36	42	48	72	84	90
00	.697	.647	.584	.623	.591	.550	.437	.476	.443	.421
01	.707	.657	.577	.626	.599	.560	.453	.495	.444	.420
02	.699	.655	.561	.625	.595	.546	.444	.491	.446	.409
03	.681	.649	.553	.629	.593	.537	.440	.487	.459	.391
04	.650	.642	.554	.630	.586	.521	.434	.483	.461	.389
05	.627	.638	.553	.622	.594	.511	.439	.486	.464	.397
06	.604	.636	.552	.616	.594	.516	.436	.477	.466	.402
07	.584	.614	.539	.601	.581	.516	.443	.487	.466	.409
08	.564	.595	.539	.583	.571	.508	.439	.476	.464	.419
09	.539	.586	.532	.569	.569	.507	.425	.462	.468	.407
10	.510	.573	.520	.557	.556	.504	.400	.443	.481	.398
11	.499	.547	.522	.535	.548	.494	.406	.415	.472	.391
12	.485	.536	.526	.522	.536	.487	.412	.393	.463	.383
13	.476	.528	.519	.499	.531	.475	.415	.381	.474	.386
14	.466	.505	.509	.488	.520	.490	.408	.375	.466	.385
15	.453	.499	.500	.479	.508	.499	.406	.363	.440	.382
16	.441	.499	.488	.486	.500	.504	.402	.353	.442	.379
17	.427	.496	.472	.479	.485	.498	.388	.338	.441	.360
18	.409	.476	.462	.464	.473	.493	.370	.326	.442	.337
19	.394	.464	.451	.439	.456	.482	.351	.312	.421	.329
20	.387	.442	.453	.418	.440	.469	.336	.282	.411	.317
21	.389	.413	.441	.393	.428	.467	.319	.267	.390	.305
22	.373	.388	.416	.369	.415	.465	.318	.256	.374	.301
23	.369	.380	.397	.357	.412	.453	.312	.253	.358	.300
24	.371	.364	.377	.352	.421	.444	.293	.248	.353	.301
25	.368	.349	.362	.345	.413	.437	.290	.249	.329	.299
26	.363	.337	.355	.301	.396	.428	.272	.238	.305	.289
27	.359	.322	.346	.300	.379	.423	.258	.234	.283	.277
28	.347	.301	.336	.300	.369	.416	.262	.228	.273	.268
29	.343	.288	.333	.295	.359	.408	.256	.231	.248	.269
30	.335	.282	.327	.290	.353	.391	.233	.229	.237	.272
31	.318	.284	.322	.274	.339	.369	.216	.221	.229	.268
32	.312	.288	.320	.277	.322	.370	.211	.212	.233	.253
33	.315	.294	.322	.275	.316	.370	.207	.197	.228	.236
34	.311	.301	.322	.272	.283	.371	.196	.175	.223	.223
35	.303	.293	.310	.260	.331	.371	.182	.168	.224	.203
36	.289	.284	.305	.248	.336	.363	.175	.151	.217	.197
37	.276	.282	.290	.251	.343	.352	.177	.149	.199	.196
38	.264	.264	.290	.251	.340	.346	.178	.147	.185	.200
39	.252	.255	.278	.254	.341	.339	.148	.148	.170	.211
40	.240	.254	.262	.263	.335	.337	.139	.149	.153	.233
41	.237	.246	.247	.267	.323	.321	.130	.151	.149	.[illegible]
42	.227	.243	.242	.278	.321	.297	.121	.144	.144	.193
43	.227	.236	.231	.290	.315	.289	.107	.146	.129	.174
44	.237	.236	.[illegible]7	.281	.314	.278	.922,-1	.146	.121	.169
45	.237	.232	.210	.294	.306	.280	.986,-1	.139	.114	.158
46	.241	.223	.207	.308	.304	.274	.971,-1	.141	.120	.150
47	.238	.229	.215	.310	.303	.264	.912,-1	.141	.119	.139
48	.241	.229	.225	.319	.307	.265	.890,-1	.140	.120	.139
49	.234	.235	.228	.336	.309	.269	.660,-1	.143	.132	.146
50	.235	.241	.217	.350	.316	.274	.660,-1	.134	.143	.149
51	.232	.239	.205	.343	.317	.274	.540,-1	.127	.156	.148
52	.234	.238	.200	.348	.319	.281	.640,-1	.131	.162	.145
53	.233	.238	.193	.364	.324	.271	.640,-1	.133	.166	.147
54	.234	.232	.194	.374	.332	.266	.600,-1	.147	.156	.136
55	.217	.242	.195	.379	.335	.269	.640,-1	.151	.137	.127
56	.203	.238	.182	.382	.340	.258	.610,-1	.143	.140	.119
57	.186	.231	.181	.387	.348	.257	.560,-1	.149	.146	.110
58	.180	.229	.184	.387	.348	.263	.480,-1	.137	.143	.106
59	.179	.228	.184	.379	.341	.268	.390,-1	.115	.136	.110
60	.163	.222	.183	.376	.331	.274	.320,-1	.104	.122	.112

Run No. 8 ; u component

	Separation Distance (x.)									
K	6	12	18	24	36	42	60	72	84	90
00	.697	.647	.584	.623	.591	.550	.437	.476	.443	.421
01	.707	.657	.577	.626	.599	.560	.453	.495	.444	.420
02	.699	.655	.561	.625	.595	.546	.444	.491	.446	.409
03	.681	.649	.553	.629	.593	.537	.440	.487	.459	.391
04	.650	.642	.554	.630	.586	.521	.434	.483	.461	.389
05	.627	.638	.553	.622	.594	.511	.439	.486	.464	.397
06	.604	.636	.552	.616	.594	.516	.436	.477	.466	.402
07	.584	.614	.539	.601	.581	.516	.443	.487	.466	.409
08	.564	.595	.539	.583	.571	.508	.439	.476	.464	.419
09	.539	.586	.532	.569	.569	.507	.425	.462	.468	.407
10	.510	.573	.520	.557	.556	.504	.400	.443	.481	.398
11	.499	.547	.522	.535	.548	.494	.406	.415	.472	.391
12	.485	.536	.526	.522	.536	.487	.412	.393	.463	.383
13	.476	.528	.519	.499	.531	.475	.415	.381	.474	.386
14	.466	.505	.509	.488	.520	.490	.408	.375	.466	.385
15	.453	.499	.500	.479	.508	.499	.406	.363	.440	.382
16	.441	.499	.488	.486	.500	.504	.402	.353	.442	.379
17	.427	.496	.472	.479	.485	.498	.388	.338	.441	.360
18	.409	.476	.462	.464	.473	.493	.370	.326	.442	.337
19	.394	.464	.451	.439	.456	.482	.351	.312	.421	.329
20	.387	.442	.453	.418	.440	.469	.336	.282	.411	.317
21	.389	.413	.441	.393	.428	.467	.319	.267	.390	.305
22	.373	.388	.416	.369	.415	.465	.318	.256	.374	.301
23	.369	.380	.397	.357	.412	.453	.312	.253	.358	.300
24	.371	.364	.377	.352	.421	.444	.293	.248	.353	.301
25	.368	.349	.362	.345	.413	.437	.290	.249	.329	.299
26	.363	.337	.355	.301	.396	.428	.272	.238	.305	.289
27	.359	.322	.346	.300	.379	.423	.258	.234	.283	.277
28	.347	.301	.336	.300	.369	.416	.262	.228	.273	.268
29	.343	.288	.333	.295	.359	.408	.256	.231	.248	.269
30	.335	.282	.327	.290	.355	.391	.233	.229	.237	.272
31	.318	.284	.322	.274	.339	.369	.216	.221	.229	.268
32	.312	.288	.320	.277	.322	.370	.211	.212	.233	.253
33	.315	.294	.322	.275	.316	.370	.207	.197	.228	.236
34	.311	.301	.322	.272	.283	.371	.196	.175	.223	.223
35	.303	.293	.310	.260	.331	.371	.182	.168	.224	.208
36	.289	.284	.305	.248	.336	.363	.175	.151	.217	.197
37	.276	.282	.290	.251	.343	.352	.177	.149	.199	.196
38	.264	.264	.290	.251	.340	.346	.178	.147	.185	.200
39	.252	.255	.278	.254	.341	.339	.148	.148	.170	.211
40	.240	.254	.262	.263	.335	.337	.139	.149	.153	.233
41	.237	.246	.247	.267	.323	.321	.130	.151	.149	.213
42	.227	.243	.242	.278	.321	.297	.121	.144	.144	.193
43	.227	.236	.231	.290	.315	.289	.107	.146	.129	.174
44	.237	.236	.227	.281	.314	.278	.942,-1	.146	.121	.169
45	.237	.232	.210	.294	.306	.280	.986,-1	.139	.114	.158
46	.241	.223	.207	.305	.304	.274	.971,-1	.141	.120	.150
47	.238	.229	.215	.310	.305	.264	.912,-1	.141	.119	.139
48	.241	.229	.225	.319	.307	.265	.890,-1	.140	.120	.139
49	.234	.235	.228	.336	.309	.269	.660,-1	.143	.132	.146
50	.235	.241	.217	.350	.316	.274	.660,-1	.134	.143	.149
51	.232	.239	.205	.343	.317	.274	.540,-1	.127	.156	.148
52	.234	.238	.200	.348	.319	.281	.640,-1	.131	.162	.145
53	.233	.238	.193	.364	.324	.271	.640,-1	.133	.166	.147
54	.234	.232	.194	.374	.332	.266	.600,-1	.147	.156	.136
55	.217	.242	.195	.379	.335	.269	.640,-1	.151	.137	.127
56	.205	.238	.182	.382	.340	.258	.610,-1	.143	.140	.119
57	.186	.231	.181	.387	.348	.257	.560,-1	.149	.146	.110
58	.180	.229	.184	.387	.348	.263	.480,-1	.137	.143	.106
59	.172	.228	.184	.379	.341	.268	.390,-1	.115	.136	.110
60	.163	.222	.183	.376	.331	.274	.320,-1	.104	.122	.112

Run No. 8 ; v component

K	Separation Distance (m.) 6	12	18	24	36	42	48	72	84	90
00	.873	.833	.815	.779	.724	.744	.691	.640	.632	.647
01	.867	.842	.823	.770	.724	.725	.693	.630	.639	.652
02	.853	.837	.833	.765	.717	.747	.690	.626	.641	.646
03	.845	.828	.831	.753	.718	.742	.694	.632	.642	.651
04	.831	.814	.825	.754	.720	.742	.697	.628	.633	.649
05	.817	.809	.818	.758	.716	.744	.692	.519	.636	.645
06	.805	.792	.805	.754	.715	.738	.691	.628	.635	.647
07	.787	.781	.795	.757	.711	.733	.689	.628	.629	.637
08	.775	.765	.780	.750	.710	.733	.694	.623	.620	.639
09	.761	.747	.774	.748	.705	.731	.700	.621	.615	.635
10	.744	.736	.762	.744	.698	.732	.697	.622	.618	.635
11	.721	.737	.756	.739	.692	.726	.701	.621	.623	.629
12	.706	.733	.743	.733	.689	.712	.700	.616	.621	.624
13	.698	.722	.730	.725	.681	.705	.697	.613	.618	.632
14	.690	.712	.727	.717	.676	.711	.693	.615	.615	.629
15	.681	.701	.720	.713	.673	.714	.693	.612	.341,-1	.626
16	.678	.700	.712	.706	.673	.697	.688	.610	.613	.618
17	.670	.691	.703	.700	.668	.693	.682	.603	.605	.615
18	.655	.672	.685	.689	.660	.685	.677	.604	.599	.616
19	.654	.668	.683	.673	.656	.687	.672	.595	.598	.607
20	.653	.662	.681	.658	.647	.688	.664	.595	.591	.598
21	.644	.651	.674	.654	.643	.685	.654	.591	.573	.590
22	.636	.651	.664	.648	.637	.681	.651	.590	.568	.573
23	.635	.638	.663	.640	.634	.680	.639	.586	.563	.568
24	.620	.632	.658	.632	.629	.675	.631	.579	.551	.562
25	.535,-1	.628	.656	.623	.630	.665	.621	.573	.542	.547
26	.619	.623	.649	.616	.631	.663	.615	.574	.559	.542
27	.610	.616	.638	.607	.625	.655	.604	.567	.528	.534
28	.606	.611	.632	.598	.624	.646	.599	.553	.524	.534
29	.597	.597	.620	.590	.614	.636	.536	.542	.514	.535
30	.588	.585	.612	.581	.613	.630	.588	.534	.508	.526
31	.582	.578	.604	.573	.611	.621	.585	.525	.505	.529
32	.579	.566	.596	.571	.606	.611	.579	.517	.502	.522
33	.571	.551	.586	.567	.600	.608	.571	.507	.492	.517
34	.567	.546	.575	.560	.593	.609	.564	.500	.493	.518
35	.557	.541	.561	.556	.591	.605	.545	.484	.489	.505
36	.550	.531	.548	.558	.580	.588	.540	.481	.480	.505
37	.542	.517	.544	.554	.571	.582	.530	.473	.471	.489
38	.535	.510	.525	.545	.564	.577	.516	.466	.468	.485
39	.533	.505	.516	.536	.566	.574	.509	.462	.465	.481
40	.519	.490	.505	.525	.557	.567	.499	.459	.461	.475
41	.511	.483	.490	.50	.552	.561	.498	.442	.455	.467
42	.508	.473	.483	.515	.550	.559	.491	.425	.447	.463
43	.501	.465	.477	.510	.546	.550	.489	.420	.434	.459
44	.506	.467	.473	.504	.539	.540	.483	.408	.429	.452
45	.494	.466	.478	.498	.529	.528	.474	.406	419	.447
46	.486	.465	.472	.487	.528	.515	.472	.399	.415	.437
47	.480	.459	.471	.481	.518	.519	.457	.389	.412	.431
48	.479	.464	.465	.473	.517	.514	.441	.383	.408	.431
49	.473	.461	.464	.469	.513	.510	.430	.378	399	.423
50	.479	.465	.470	.469	.508	.505	.421	.375	.396	.413
51	.478	.460	.462	.460	.504	.497	.411	.378	.394	.411
52	.471	.456	.466	.456	.502	.496	.396	.372	.392	.404
53	.469	.451	.457	.458	.497	.493	.385	.369	.378	.394
54	.462	.444	.453	.458	.486	.488	.378	.361	.368	.380
55	.459	.442	.454	.450	.482	.483	.367	.348	.353	.373
56	.457	.435	.450	.451	.477	.483	.361	.350	.358	.366
57	.456	.432	.444	.448	.485	.479	.352	.343	.332	.358
58	.451	.438	.440	.449	.488	.483	.348	.341	.332	.357
59	.445	.436	.437	.455	.485	.483	.343	.330	.336	.345
60	.438	.427	.437	.453	.485	.482	.338	.319	.329	.337

Run No. 8 ; w component

K	Separation Distance (m.) 6	12	18	24	36	42	48	72	84	90
00	-.278,-1	-.453,-1	-.104,-1	.270,-1	-.254,-2	-.355,-1		-.363,-1	-.349,-1	.180,-1
01	.248,-1	-.182,-1	-.121,-1	.410,-2	.273,-1	-.369,-1		-.588,-1	.600,-3	-.342,-1
02	.666,-1	-.294,-1	-.248,-1	.447,-1	-.341,-2	.135,-1		-.359,-1	-.131,-1	-.126,-1
03	.578,-1	-.213,-1	.105,-1	.568,-1	-.129,-1	-.536,-1		.112,-1	-.427,-2	.129,-1
04	-.172,-1	.796,-1	.470,-2	-.182,-1	.159,-1	.135,-1		.407,-2	-.515,-1	-.440,-2
05	.729,-1	.216,-1	.320,-1	.314,-1	-.292,-2	.129,-1		-.843,-2	-.487,-1	-.850,-2
06	-.467,-1	.344,-2	-.980,-3	-.105,-1	.800,-2	-.219,-1		-.348,-1	-.309,-1	.347,-2
07	-.309,-1	-.126,-1	-.436,-1	.261,-1	-.281,-2	.217,-1		.230,-1	.282,-1	.531,-1
08	.108,-1	.218,-1	-.820,-2	.258,-1	-.240,-2	.147,-1		-.839,-2	-.840,-1	.381,-1
09	.250,-1	-.121,-1	.460,-1	-.132,-1	.446,-1	.790,-1		-.280,-1	-.759,-1	.304,-1
10	.405,-2	.530,-2	.215,-1	-.264,-1	-.230,-1	.127,-1		-.344,-1	.206,-2	.222,-1
11	-.520,-2	-.420,-2	.556,-1	.159,-1	-.147,-1	-.289,-2		.190,-1	-.272,-1	-.222,-1
12	-.153,-1	-.214,-1	.271,-1	-.154,-1	-.299,-1	.602,-1		.259,-2	-.815,-2	-.270,-2
13	-.253,-1	-.744,-1	.207,-1	.213,-1	-.367,-1	.513,-1		-.783,-2	.174,-1	-.541,-1
14	-.563,-1	.269,-2	-.411,-1	-.196,-1	.200,-3	.767,-1		.458,-1	-.204,-1	-.252,-1
15	-.346,-1	-.438,-1	-.570,-2	.125,-1	.364,-1	-.140,-1		-.279,-1	.134,-1	-.774,-1
16	-.533,-1	-.528,-1	.550,-2	.368,-1	-.270,-1	-.360,-2		-.319,-1	.697,-1	-.390,-2
17	.378,-1	-.312,-1	.452,-1	-.168,-1	-.219,-1	.680,-1		.431,-1	.656,-2	-.202,-1
18	.937,-2	-.430,-1	.452,-2	.499,-2	-.499,-1	-.160,-2		-.210,-3	.980,-1	-.861,-1
19	-.542,-1	-.433,-1	.112,-1	-.172,-1	-.419,-1	.440,-2		-.450,-1	.510,-1	.271,-1
20	-.306,-1	-.620,-1	.327,-2	-.530,-1	-.366,-1	-.195,-1		.299,-1	.743,-1	.524,-1
21	-.365,-1	-.473,-1	.396,-1	-.435,-1	-.105	-.160,-1		-.169,-1	.177,-1	.423,-2
22	.329,-1	-.764,-1	-.181,-2	-.729,-2	.920,-2	.259,-1		.199,-2	.390,-1	-.251,-1
23	-.530,-1	-.460,-1	-.298,-1	-.237,-1	.111,-1	.255,-1		.459,-1	-.667,-2	.117,-1
24	-.287,-1	-.516,-1	-.436,-1	-.176,-1	-.382,-1	.116,-1		.319,-1	.488,-1	.521,-1
25	-.100,-2	-.136,-2	-.184,-1	-.425,-1	.512,-1	.273,-1		.184,-1	.358,-1	-.424,-1
26	.153,-1	.478,-1	.195,-1	-.661,-1	-.160,-1	.283,-1		.737,-2	.882,-2	-.210,-2
27	.374,-1	-.475,-1	.152,-1	-.340,-1	-.940,-2	.942,-1		-.108,-1	-.186,-1	-.378,-1
28	.513,-2	.156,-1	-.934,-1	-.145,-1	-.344,-1	.992,-1		-.352,-1	.277,-1	.601,-2
29	.960,-3	-.423,-2	.210,-2	-.469,-1	-.595,-1	.258,-1		-.206,-1	.285,-1	.489,-1
30	-.990,-2	.139,-1	-.242,-1	-.565,-1	-.534,-1	.322,-1		.261,-1	.340,-2	-.174,-1
31	.297,-1	-.429,-1	.115,-1	-.546,-1	-.285,-1	.473,-1		-.345,-1	-.223,-1	-.120,-2
32	-.109,-1	.171,-1	.381,-1	-.331,-1	.835,-2	-.180,-1		.506,-1	.828,-1	-.111,-1
33	-.323,-1	.687,-1	.196,-1	-.253,-1	-.202,-1	.212,-1		.231,-1	.545,-1	-.370,-2
34	-.890,-2	-.320,-2	.311,-1	-.989,-1	-.325,-1	.130,-1		.542,-1	.181,-1	-.282,-2
35	-.340,-2	.365,-1	.101,-1	-.103	-.156,-1	.348,-1		-.110,-1	-.136,-1	-.168,-1
36	.336,-1	.286,-1	.284,-1	-.220,-1	-.580,-2	-.870,		-.318,-1	-.133,-1	-.153,-1
37	-.197,-1	.570,-1	.448,-2	.359,-2	.206,-1	.570,-1		-.920,-2	-.870,-2	-.297,-1
38	-.335,-1	.370,-1	.104,-1	-.130,-1	.881,-1	-.485,-2		.110,-2	-.355,-1	-.280,-2
39	.867,-1	.432,-1	.203,-1	-.629,-1	.336,-1	-.150,-2		.172,-2	-.588,-1	.260,-2
40	.424,-1	.109,-1	-.510,-1	.169,-2	.476,-1	.699,-1		-.393,-1	-.360,-1	-.175,-1
41	-.165,-2	.514,-1	-.842,-1	.102,-2	.247,-1	-.940,-2		-.678,-2	-.277,-1	-.167,-1
42	.118,-1	.802,-2	-.582,-2	-.414,-1	.374,-1	.630,-1		.133,-1	-.567,-1	-.329,-1
43	-.159,-1	.560,-2	.731,-1	-.194,-1	.111,-1	.109,-1		.429,-1	-.299,-1	-.510,-2
44	-.212,-2	.208,-1	.494,-2	-.284,-1	.681,-1	.197,-1		.135,-1	-.131,-1	-.362,-1
45	.465,-1	-.609,-2	-.589,-1	-.304,-1	.417,-1	-.323,-2		-.139,-1	.552,-1	-.468,-1
46	.323,-1	-.283,-1	.863,-1	-.472,-1	.509,-1	-.234,-1		.544,-1	.257,-1	-.115,-1
47	-.341,-1	.509,-1	.316,-1	.251,-2	-.911,-2	-.200,-3		.258,-1	.770,-2	.164,-1
48	-.787,-2	-.114,-1	-.410,-1	.325,-1	.323,-1	-.293,-1		-.645,-2	-.272,-1	-.441,-2
49	.487,-1	-.966,-2	-.509,-2	.400,-3	.322,-2	.319,-1		-.404,-1	.457,-2	.381,-1
50	-.700,-3	-.535,-2	.458,-1	-.200,-1	.206,-1	.164,-1		-.707,-2	.765,-1	.589,-1
51	-.153,-1	-.142,-1	-.600,-3	-.198,-1	.900,-2	.363,-1		-.132,-1	.301,-1	.294,-2
52	-.148,-1	-.347,-1	.165,-1	-.275,-1	.295,-1	-.312,-1		-.161,-1	.174,-1	.616,-1
53	.171,-1	-.513,-1	-.185,-1	.152,-2	.590,-1	-.451,-1		-.339,-1	.645,-1	-.162,-1
54	-.130,-1	-.608,-1	450,-3	.275,-1	.389,-1	-.230,-1		.295,-1	-.895,-1	-.178,-1
55	-.465,-1	-.190,-2	.577,-1	.455,-1	.616,-1	-.272,-1		.657,-1	-.994,-2	.555,-1
56	-.184,-1	-.214,-1	-.355,-1	.189,-1	.592,-1	-.422,-1		-.980,-2	-.119,-1	-.634,-2
57	.696,-2	.209,-1	-.485,-2	-.340,-2	.558,-1	.390,-2		-.115,-1	.302,-2	.140,-1
58	.474,-2	-.254,-1	.414,-1	.476,-1	.680,-1	.255,-1		.326,-1	.597,-1	.190,-1
59	-.513,-1	-.318,-1	.586,-1	.162,-1	.597,-1	-.150,-1		-.431,-1	.453,-1	.253,-1
60	-.870,-2	.213,-1	.746,-1	-.141,-1	.115,-1	-.329,-1		-.300,-1	.245,-1	-.400,-1

Run No. 10 ; u component

K	Separation Distance (m.)									
	6	12	18	24	36	42	48	72	84	90
00	.801	.800	.720	.795	.759	.699	.652	.592	.541	.507
01	.775	.777	.710	.776	.744	.688	.646	.576	.531	.490
02	.753	.766	.695	.760	.730	.680	.633	.566	.517	.472
03	.731	.749	.684	.743	.713	.667	.617	.548	.503	.457
04	.711	.725	.676	.726	.697	.653	.594	.539	.493	.453
05	.691	.705	.664	.711	.682	.638	.574	.543	.482	.452
06	.670	.688	.645	.695	.670	.625	.539	.536	.479	.435
07	.649	.677	.621	.682	.657	.608	.543	.526	.465	.427
08	.636	.659	.602	.664	.649	.593	.529	.510	.454	.405
09	.620	.639	.553	.651	.636	.577	.523	.498	.437	.381
10	.597	.622	.557	.641	.619	.557	.509	.490	.414	.364
11	.579	.613	.542	.636	.602	.535	.495	.473	.394	.355
12	.564	.591	.526	.621	.583	.511	.479	.458	.374	.345
13	.543	.560	.513	.606	.560	.491	.463	.440	.351	.325
14	.528	.539	.498	.593	.537	.476	.449	.435	.333	.305
15	.514	.513	.479	.589	.514	.461	.433	.419	.318	.278
16	.502	.495	.462	.576	.490	.447	.420	.402	.299	.259
17	.489	.491	.439	.553	.472	.431	.406	.379	.284	.235
18	.479	.477	.414	.530	.451	.412	.389	.355	.257	.225
19	.466	.456	.398	.514	.431	.400	.366	.343	.247	.205
20	.448	.441	.381	.498	.416	.386	.347	.321	.212	.193
21	.440	.418	.360	.486	.396	.374	.332	.298	.195	.177
22	.431	.402	.343	.466	.386	.357	.313	.271	.179	.158
23	.416	.393	.326	.454	.370	.338	.295	.243	.164	.146
24	.386	.376	.309	.441	.363	.325	.279	.227	.143	.130
25	.365	.356	.294	.422	.352	.313	.253	.210	.127	.110
26	.345	.342	.276	.406	.334	.304	.227	.194	.113	.100
27	.333	.327	.260	.390	.327	.296	.202	.167	.102	.960,-1
28	.310	.312	.248	.372	.313	.288	.176	.140	.841,-1	.864,-1
29	.286	.285	.236	.356	.297	.269	.152	.122	.646,-1	.689,-1
30	.263	.264	.231	.340	.279	.258	.135	.115	.487,-1	.594,-1
31	.247	.246	.222	.326	.261	.241	.121	.101	.408,-1	.501,-1
32	.236	.235	.217	.311	.249	.225	.107	.895,-1	.386,-1	.363,-1
33	.231	.216	.208	.301	.239	.210	.950,-1	.818,-1	.354,-1	.208,-1
34	.223	.205	.192	.286	.219	.193	.915,-1	.743,-1	.213,-1	.957,-2
35	.218	.188	.174	.272	.205	.182	.839,-1	.700,-1	.469,-2	.281,-2
36	.213	.177	.158	.257	.184	.177	.779,-1	.581,-1	-.830,-2	-.647,-2
37	.201	.163	.148	.238	.169	.172	.728,-1	.404,-1	-.173,-1	-.788,-2
38	.190	.149	.136	.219	.148	.161	.655,-1	.296,-1	-.177,-1	-.563,-2
39	.183	.142	.138	.200	.139	.160	.518,-1	.269,-1	-.206,-1	-.647,-2
40	.176	.133	.132	.183	.128	.159	.375,-1	.151,-1	-.195,-1	-.138,-1
41	.169	.121	.138	.167	.118	.146	.219,-1	-.161,-2	-.173,-1	-.273,-1
42	.167	.116	.135	.155	.114	.130	.143,-1	-.807,-2	-.202,-1	-.338,-1
43	.167	.102	.120	.138	.105	.117	.146,-1	-.140,-1	-.274,-1	-.464,-1
44	.160	.948,-1	.106	.120	.945,-1	.106	.509,-2	-.285,-1	-.401,-1	-.540,-1
45	.154	.786,-1	.978,-1	.109	.850,-1	.101	.318,-3	-.431,-1	-.484,-1	-.597,-1
46	.145	.654,-1	.893,-1	.974,-1	.774,-1	.932,-1	-.223,-2	-.500,-1	-.567,-1	-.642,-1
47	.130	.582,-1	.781,-1	.939,-1	.664,-1	.903,-1	-.165,-1	-.597,-1	-.671,-1	-.636,-1
48	.123	.525,-1	.660,-1	.825,-1	.552,-1	.806,-1	-.337,-1	-.678,-1	-.761,-1	-.625,-1
49	.118	.423,-1	.523,-1	.758,-1	.454,-1	.744,-1	-.470,-1	-.748,-1	-.823,-1	-.605,-1
50	.117	.361,-1	.443,-1	.683,-1	.399,-1	.668,-1	-.572,-1	-.700,-1	-.837,-1	-.639,-1
51	.113	.361,-1	.394,-1	.651,-1	.366,-1	.651,-1	-.683,-1	-.732,-1	-.877,-1	-.568,-1
52	.109	.291,-1	.398,-1	.639,-1	.378,-1	.630,-1	-.776,-1	-.807,-1	-.899,-1	-.566,-1
53	.102	.256,-1	.374,-1	.588,-1	.396,-1	.656,-1	-.836,-1	-.893,-1	-.881,-1	-.599,-1
54	.992,-1	.195,-1	.314,-1	.607,-1	.382,-1	.616,-1	-.887,-1	-.102	-.859,-1	-.616,-1
55	.920,-1	.158,-1	.213,-1	.585,-1	.301,-1	.521,-1	-.960,-1	-.106	-.805,-1	-.619,-1
56	.893,-1	.200,-1	.233,-1	.547,-1	.233,-1	.494,-1	-.961,-1	-.108	-.769,-1	-.715,-1
57	.905,-1	.134,-1	.185,-1	.509,-1	.251,-1	.435,-1	-.939,-1	-.102	-.765,-1	-.836,-1
58	.891,-1	.826,-3	.805,-2	.542,-1	.164,-1	.409,-1	-.881,-1	-.949,-1	-.790,-1	-.974,-1
59	.837,-1	.619,-3	.322,-2	.276,-1	.205,-1	.333,-1	-.759,-1	-.969,-1	-.848,-1	-.107
60	.786,-1	.335,-2	.241,-2	.236,-1	.254,-1	.297,-1	-.686,-1	-.962,-1	-.891,-1	-.995,-1

Run No. 10 ; v component

Separation Distance (m.)

K	6	12	18	24	36	42	48	72	84	90
00	.842	.807	.748	.763	.691	.670	.666	.585	.582	.546
01	.808	.769	.717	.723	.682	.654	.656	.578	.571	.536
02	.776	.735	.701	.686	.641	.637	.643	.573	.557	.531
03	.750	.697	.682	.661	.621	.617	.631	.561	.554	.520
04	.724	.672	.659	.637	.592	.601	.613	.558	.552	.516
05	.694	.653	.631	.609	.578	.592	.593	.556	.540	.513
06	.681	.632	.624	.578	.555	.571	.586	.550	.538	.508
07	.661	.613	.596	.557	.544	.555	.574	.539	.533	.504
08	.644	.596	.579	.538	.535	.539	.561	.536	.532	.499
09	.626	.576	.555	.516	.529	.529	.552	.528	.524	.493
10	.604	.560	.532	.499	.515	.517	.543	.522	.521	.500
11	.576	.534	.510	.483	.502	.506	.531	.518	.523	.499
12	.566	.508	.500	.473	.493	.491	.520	.509	.523	.499
13	.543	.492	.483	.465	.488	.485	.519	.510	.521	.498
14	.531	.472	.476	.455	.480	.464	.513	.513	.513	.494
15	.516	.470	.456	.449	.467	.459	.502	.508	.512	.489
16	.515	.454	.444	.444	.465	.458	.498	.506	.506	.487
17	.501	.445	.429	.436	.457	.450	.488	.502	.503	.473
18	.483	.435	.423	.435	.447	.439	.482	.496	.491	.465
19	.461	.421	.418	.429	.449	.447	.476	.491	.485	.456
20	.456	.414	.401	.424	.443	.439	.465	.478	.476	.449
21	.451	.416	.402	.418	.438	.426	.463	.470	.466	.441
22	.450	.411	.393	.413	.434	.412	.455	.465	.453	.422
23	.437	.400	.386	.413	.427	.400	.449	.450	.434	.413
24	.428	.389	.389	.408	.411	.380	.438	.434	.423	.398
25	.425	.382	.383	.406	.404	.365	.429	.418	.410	.377
26	.410	.369	.368	.397	.391	.356	.419	.406	.394	.368
27	.411	.366	.360	.382	.377	.340	.411	.387	.383	.357
28	.405	.355	.342	.368	.360	.332	.404	.367	.373	.343
29	.394	.342	.341	.362	.347	.322	.388	.355	.372	.339
30	.382	.332	.335	.353	.338	.311	.371	.356	.357	.326
31	.365	.333	.330	.346	.331	.290	.362	.355	.345	.310
32	.351	.336	.319	.332	.316	.284	.351	.357	.339	.302
33	.337	.334	.322	.327	.308	.269	.335	.351	.319	.296
34	.338	.329	.315	.312	.289	.259	.320	.334	.310	.288
35	.330	.318	.303	.301	.277	.246	.312	.321	.305	.283
36	.319	.303	.287	.295	.263	.236	.304	.317	.301	.279
37	.298	.296	.274	.279	.253	.223	.297	.312	.287	.266
38	.295	.290	.265	.265	.240	.212	.287	.305	.284	.265
39	.279	.283	.255	.255	.227	.199	.267	.291	.271	.257
40	.268	.271	.240	.240	.216	.185	.251	.279	.261	.250
41	.258	.266	.218	.227	.207	.169	.239	.270	.254	.246
42	.249	.252	.206	.212	.197	.160	.225	.262	.249	.241
43	.237	.242	.189	.199	.179	.152	.211	.257	.253	.231
44	.231	.229	.174	.180	.164	.133	.197	.254	.255	.228
45	.219	.214	.155	.167	.150	.120	.186	.248	.255	.218
46	.208	.201	.143	.154	.137	.115	.172	.248	.239	.212
47	.194	.184	.134	.141	.123	.102	.163	.244	.236	.212
48	.191	.170	.126	.127	.111	.956,-1	.153	.235	.234	.204
49	.180	.154	.123	.119	.102	.952,-1	.148	.227	.225	.197
50	.182	.145	.110	.115	.943,-1	.903,-1	.140	.224	.213	.186
51	.181	.134	.103	.113	.920,-1	.847,-1	.134	.207	.205	.180
52	.169	.124	.959,-1	.111	.905,-1	.835,-1	.128	.191	.199	.176
53	.166	.121	.836,-1	.111	.858,-1	.745,-1	.126	.172	.198	.170
54	.160	.111	.900,-1	.102	.777,-1	.587,-1	.119	.164	.193	.163
55	.158	.107	.865,-1	.908,-1	.748,-1	.561,-1	.111	.160	.183	.153
56	.154	.961,-1	.818,-1	.801,-1	.636,-1	.512,-1	.105	.149	.173	.146
57	.158	.944,-1	.696,-1	.642,-1	.553,-1	.436,-1	.950,-1	.140	.157	.133
58	.160	.933,-1	.220	.499,-1	.472,-1	.388,-1	.816,-1	.121	.148	.120
59	.147	.836,-1	.637,-1	.291,-1	.419,-1	.354,-1	.734,-1	.105	.132	.107
60	.137	.783,-1	.473,-1	.232,-1	.400,-1	.365,-1	.704,-1	.863,-1	.121	.971,-1

Run No. 13 ; u component

	Separation Distance (m.)									
K	6	12	18	24	36	42	48	72	84	90
00	.932	.918	.911	.906	.919	.927	.892	.865	.891	.896
01	.927	.917	.908	.904	.918	.929	.893	.869	.892	.894
02	.925	.915	.907	.904	.922	.931	.898	.867	.885	.892
03	.927	.907	.902	.906	.918	.930	.893	.874	.882	.891
04	.918	.896	.895	.908	.914	.926	.888	.873	.883	.895
05	.916	.892	.894	.905	.911	.922	.886	.875	.877	.891
06	.911	.882	.895	.905	.910	.920	.885	.873	.874	.886
07	.905	.878	.888	.902	.907	.917	.886	.868	.870	.880
08	.897	.866	.887	.901	.912	.912	.858	.866	.866	.871
09	.892	.872	.888	.899	.908	.905	.886	.868	.864	.868
10	.886	.871	.883	.895	.901	.903	.883	.874	.864	.865
11	.882	.872	.886	.896	.892	.900	.884	.877	.861	.858
12	.878	.871	.888	.897	.886	.897	.883	.874	.858	.854
13	.872	.869	.889	.895	.877	.896	.880	.871	.851	.853
14	.873	.864	.885	.891	.874	.889	.879	.867	.851	.853
15	.873	.868	.881	.892	.869	.886	.880	.861	.850	.852
16	.877	.870	.872	.888	.866	.886	.879	.853	.847	.852
17	.875	.867	.863	.883	.863	.883	.874	.844	.836	.852
18	.875	.857	.864	.877	.862	.874	.868	.840	.832	.855
19	.873	.850	.865	.874	.862	.870	.865	.841	.835	.854
20	.872	.841	.861	.870	.862	.868	.859	.841	.835	.852
21	.868	.838	.857	.866	.864	.866	.856	.834	.847	.848
22	.866	.834	.852	.862	.864	.869	.863	.834	.845	.842
23	.865	.834	.847	.861	.853	.867	.861	.834	.838	.839
24	.862	.832	.839	.857	.854	.867	.866	.833	.835	.841
25	.858	.834	.830	.855	.851	.862	.860	.830	.832	.841
26	.854	.835	.826	.849	.851	.858	.853	.824	.832	.839
27	.849	.829	.820	.851	.848	.853	.856	.829	.831	.832
28	.841	.826	.822	.853	.848	.848	.849	.828	.821	.824
29	.837	.811	.820	.853	.850	.846	.842	.824	.815	.823
30	.838	.807	.806	.855	.848	.842	.842	.821	.813	.819
31	.834	.800	.800	.850	.847	.839	.838	.820	.805	.815
32	.830	.791	.801	.852	.846	.836	.837	.818	.800	.812
33	.830	.785	.804	.850	.840	.830	.834	.814	.794	.813
34	.830	.780	.807	.842	.839	.823	.830	.814	.795	.811
35	.827	.777	.803	.833	.832	.819	.830	.813	.797	.807
36	.824	.778	.804	.828	.821	.816	.828	.806	.799	.805
37	.818	.777	.801	.827	.809	.814	.826	.799	.800	.802
38	.817	.777	.797	.829	.801	.811	.824	.793	.791	.802
39	.814	.773	.791	.825	.798	.809	.817	.790	.788	.802
40	.814	.773	.783	.824	.795	.803	.811	.791	.789	.800
41	.814	.774	.780	.824	.795	.802	.805	.790	.784	.797
42	.815	.776	.782	.817	.795	.799	.803	.782	.781	.791
43	.812	.781	.782	.815	.794	.796	.805	.776	.773	.788
44	.808	.782	.784	.805	.787	.793	.800	.771	.771	.786
45	.805	.781	.783	.799	.779	.788	.791	.770	.772	.780
46	.801	.780	.777	.797	.775	.782	.783	.773	.769	.789
47	.794	.777	.772	.796	.772	.777	.781	.770	.764	.793
48	.793	.775	.770	.791	.771	.774	.778	.777	.766	.789
49	.791	.775	.766	.793	.763	.770	.776	.785	.762	.781
50	.790	.777	.758	.789	.758	.770	.772	.783	.769	.774
51	.782	.768	.755	.786	.754	.769	.767	.775	.758	.771
52	.779	.762	.753	.787	.749	.770	.769	.772	.751	.764
53	.779	.755	.754	.787	.750	.766	.764	.769	.752	.757
54	.774	.751	.747	.780	.755	.761	.761	.772	.748	.756
55	.773	.749	.743	.775	.753	.757	.759	.779	.746	.756
56	.770	.748	.739	.776	.755	.756	.755	.776	.744	.761
57	.767	.743	.736	.773	.744	.754	.752	.777	.745	.755
58	.766	.735	.732	.771	.741	.752	.748	.774	.746	.746
59	.763	.731	.730	.767	.740	.753	.747	.767	.743	.745
60	.763	.725	.731	.761	.740	.746	.742	.768	.742	.744

Run No. 13 ; v component

	Separation Distance (m.)									
K	6	12	18	24	36	42	48	72	84	90
00	.875	.876	.897	.915	.893	.924	.766	.745	.756	.736
01	.872	.883	[illegible]	.908	.894	.917	.764	.745	.747	.731
02	.875	.878	.899	.902	.895	.916	.757	.745	.741	.736
03	.867	.878	.882	.900	.887	.910	.758	.751	.736	.741
04	.865	.875	.884	.901	.884	.911	.760	.736	.730	.730
05	.863	.876	.878	.896	.877	.906	.756	.741	.748	.730
06	.864	.863	.876	.889	.868	.897	.755	.740	.737	.738
07	.858	.858	.875	.889	.867	.902	.739	.742	.735	.736
08	.854	.863	.869	.887	.870	.899	.737	.741	.740	.736
09	.848	.860	.866	.877	.861	.894	.739	.721	.733	.722
10	.848	.850	.865	.878	.852	.889	.738	.722	.729	.716
11	.844	.849	.860	.872	.854	.885	.728	.712	.726	.721
12	.846	.842	.855	.868	.843	.880	.727	.717	.721	.722
13	.839	.826	.852	.869	.843	.874	.720	.713	.730	.725
14	.836	.837	.848	.871	.835	.871	.721	.702	.715	.713
15	.827	.830	.847	.865	.834	.868	.721	.699	.717	.719
16	.824	.829	.852	.842	.827	.861	.720	.709	.710	.705
17	.825	.817	.849	.834	.820	.851	.717	.697	.702	.707
18	.822	.819	.840	.828	.820	.851	.701	.686	.707	.701
19	.821	.820	.838	.830	.812	.852	.702	.699	.706	.715
20	.817	.818	.830	.828	.812	.853	.697	.698	.692	.704
21	.809	.816	.826	.821	.802	.843	.691	.691	.692	.700
22	.798	.806	.829	.816	.802	.839	.687	.677	.695	.700
23	.797	.800	.828	.813	.795	.837	.685	.668	.688	.689
24	.797	.797	.821	.813	.796	.831	.682	.676	.682	.701
25	.797	.786	.825	.813	.789	.831	.678	.673	.672	.689
26	.789	.791	.821	.811	.789	.825	.670	.663	.679	.693
27	.790	.795	.807	.814	.779	.812	.664	.658	.679	.676
28	.792	.790	.801	.806	.781	.809	.657	.662	.669	.672
29	.787	.792	.796	.800	.772	.818	.662	.665	.664	.671
30	.795	.769	.785	.789	.776	.821	.657	.661	.652	.669
31	.776	.762	.788	.790	.758	.814	.645	.656	.662	.662
32	.770	.751	.782	.781	.756	.808	.636	.647	.649	.660
33	.771	.748	.778	.775	.758	.805	.632	.645	.645	.647
34	.774	.744	.780	.767	.763	.798	.642	.647	.643	.647
35	.777	.748	.775	.768	.759	.790	.635	.635	.637	.647
36	.771	.745	.766	.765	.753	.796	.627	.636	.626	.640
37	.762	.735	.757	.770	.743	.794	.618	.635	.625	.636
38	.763	.728	.732	.755	.733	.789	.610	.632	.610	.633
39	.752	.721	.754	.758	.728	.783	.610	.624	.614	.625
40	.747	.714	.750	.750	.731	.779	.608	.616	.624	.632
41	.748	.706	.740	.732	.728	.771	.608	.604	.617	.618
42	.753	.708	.730	.733	.726	.765	.599	.609	.607	.613
43	.752	.702	.739	.730	.716	.758	.595	.604	.598	.616
44	.744	.694	.734	.724	.705	.758	.598	.609	.587	.609
45	.745	.687	.730	.722	.695	.753	.591	.593	.605	.611
46	.731	.684	.726	.715	.693	.751	.583	.582	.601	.607
47	.732	.680	.718	.707	.698	.753	.577	.584	.585	.592
48	.731	.678	.711	.709	.691	.747	.578	.584	.579	.593
49	.728	.671	.708	.702	.688	.741	.575	.577	.572	.584
50	.714	.670	.704	.694	.680	.735	.573	.576	.560	.589
51	.710	.659	.701	.696	.674	.727	.572	.577	.562	.585
52	.708	.656	.699	.689	.670	.726	.574	.566	.557	.576
53	.705	.653	.698	.690	.664	.722	.560	.559	.556	.582
54	.701	.652	.676	.683	.659	.716	.552	.550	.559	.586
55	.697	.644	.687	.675	.656	.709	.565	.549	.545	.583
56	.686	.637	.681	.666	.648	.705	.566	.557	.549	.566
57	.689	.629	.677	.659	.641	.699	.552	.555	.542	.560
58	.684	.625	.670	.652	.634	.695	.552	.539	.548	.551
59	.675	.619	.661	.646	.624	.694	.543	.532	.546	.565
60	.672	.613	.656	.638	.618	.688	.529	.528	.541	.569

Run No. 16 ; u component

	Separation Distance (m.)									
K	6	12	18	24	36	42	48	72	84	90
00	.798	.733	.696	.587	.516	.498	.494	.332	.318	.295
01	.772	.690	.660	.546	.488	.471	.466	.325	.311	.287
02	.747	.663	.622	.512	.469	.440	.443	.315	.305	.280
03	.716	.618	.578	.479	.432	.414	.419	.305	.296	.278
04	.682	.567	.541	.451	.397	.393	.400	.308	.295	.277
05	.639	.523	.511	.432	.374	.368	.369	.309	.283	.265
06	.594	.490	.477	.412	.355	.351	.335	.305	.280	.252
07	.543	.453	.443	.383	.332	.339	.305	.310	.282	.264
08	.496	.416	.409	.361	.315	.324	.274	.314	.280	.267
09	.452	.389	.388	.342	.295	.309	.260	.308	.271	.264
10	.419	.357	.360	.326	.275	.304	.249	.304	.268	.259
11	.391	.339	.345	.313	.268	.312	.242	.295	.268	.260
12	.369	.318	.324	.302	.274	.309	.242	.288	.260	.253
13	.352	.305	.310	.295	.279	.306	.245	.283	.255	.250
14	.334	.295	.305	.289	.285	.304	.244	.283	.245	.247
15	.309	.289	.298	.287	.287	.306	.244	.275	.232	.238
16	.296	.279	.308	.288	.287	.307	.247	.267	.224	.247
17	.287	.274	.314	.295	.286	.305	.251	.262	.216	.219
18	.282	.272	.319	.305	.284	.305	.249	.254	.212	.218
19	.278	.273	.311	.302	.288	.305	.246	.256	.206	.212
20	.278	.274	.301	.299	.287	.302	.248	.227	.197	.202
21	.277	.279	.290	.296	.290	.293	.240	.212	.186	.187
22	.276	.275	.281	.292	.291	.286	.235	.197	.177	.173
23	.286	.267	.268	.279	.282	.276	.231	.176	.165	.164
24	.288	.257	.263	.274	.273	.260	.226	.160	.158	.158
25	.277	.255	.275	.267	.266	.252	.221	.145	.153	.143
26	.273	.255	.279	.262	.257	.245	.219	.135	.146	.138
27	.265	.257	.272	.251	.250	.240	.209	.132	.130	.125
28	.260	.262	.266	.239	.233	.235	.201	.123	.115	.102
29	.259	.256	.263	.233	.222	.230	.181	.125	.910,-1	.101
30	.263	.246	.256	.227	.217	.220	.168	.119	.781,-1	.982,-1
31	.261	.246	.249	.215	.213	.207	.158	.110	.667,-1	.990,-1
32	.246	.245	.242	.191	.205	.188	.148	.820,-1	.614,-1	.933,-1
33	.233	.241	.233	.172	.195	.174	.138	.622,-1	.622,-1	.818,-1
34	.229	.233	.228	.161	.178	.167	.127	.561,-1	.660,-1	.810,-1
35	.218	.228	.220	.158	.153	.160	.118	.535,-1	.682,-1	.826,-1
36	.208	.224	.216	.137	.138	.156	.110	.630,-1	.731,-1	.876,-1
37	.208	.214	.212	.116	.130	.139	.105	.708,-1	.819,-1	.900,-1
38	.199	.205	.204	.105	.121	.135	.979,-1	.760,-1	.849,-1	.900,-1
39	.185	.201	.197	.928,-1	.117	.131	.958,-1	.846,-1	.842,-1	.867,-1
40	.179	.191	.191	.784,-1	.114	.120	.917,-1	.829,-1	.789,-1	.843,-1
41	.170	.177	.175	.757,-1	.101	.111	.910,-1	.864,-1	.713,-1	.843,-1
42	.145	.158	.166	.732,-1	.996,-1	.964,-1	.903,-1	.829,-1	.667,-1	.786,-1
43	.131	.145	.145	.795,-1	.963,-1	.919,-1	.917,-1	.743,-1	.637,-1	.810,-1
44	.126	.129	.122	.753,-1	.988,-1	.849,-1	.917,-1	.648,-1	.682,-1	.777,-1
45	.121	.115	.112	.782,-1	.103	.755,-1	.951,-1	.587,-1	.728,-1	.745,-1
46	.111	.110	.967,-1	.771,-1	.958,-1	.675,-1	.977,-1	.605,-1	.804,-1	.745,-1
47	.103	.109	.942,-1	.669,-1	.889,-1	.546,-1	.101	.613,-1	.826,-1	.756,-1
48	.899,-1	.986,-1	.866,-1	.531,-1	.816,-1	.487,-1	.991,-1	.587,-1	.804,-1	.732,-1
49	.678,-1	.860,-1	.884,-1	.434,-1	.729,-1	.419,-1	.972,-1	.570,-1	.819,-1	.745,-1
50	.599,-1	.853,-1	.787,-1	.401,-1	.561,-1	.384,-1	.929,-1	.605,-1	.781,-1	.708,-1
51	.482,-1	.762,-1	.692,-1	.311,-1	.436,-1	.296,-1	.897,-1	.648,-1	.773,-1	.695,-1
52	.361,-1	.695,-1	.540,-1	.182,-1	.397,-1	.242,-1	.895,-1	.717,-1	.743,-1	.687,-1
53	.285,-1	.626,-1	.324,-1	.623,-2	.315,-1	.225,-1	.907,-1	.630,-1	.690,-1	.668,-1
54	.248,-1	.621,-1	.160,-1	-.132,-2	.263,-1	.195,-1	.854,-1	.605,-1	.667,-1	.689,-1
55	.157,-1	.472,-1	-.207,-2	-.773,-2	.254,-1	.824,-2	.742,-1	.596,-1	.614,-1	.650,-1
56	.344,-2	.405,-1	-.606,-2	-.109,-1	.207,-1	.192,-1	.611,-1	.587,-1	.599,-1	.646,-1
57	-.899,-2	.358,-1	-.561,-2	-.151,-1	.126,-1	.245,-1	.563,-1	.662,-1	.561,-1	.710,-1
58	-.153,-1	.368,-1	-.122,-2	-.158,-1	.172,-1	.197,-1	.569,-1	.648,-1	.531,-1	.691,-1
59	-.164,-1	.311,-1	.176,-1	-.143,-1	.825,-2	.215,-1	.528,-1	.613,-1	.561,-1	.638,-1
60	-.206,-1	.333,-1	.248,-1	-.170,-1	-.177,-3	.296,-1	.486,-1	.587,-1	.538,-1	.573,-1

Run No. 16 ; v component

K	Separation Distance (m.)									
	6	12	18	24	36	42	40	72	84	90
00	.837	.846	.833	.800	.753	.764	.694	.660	.625	.655
01	.861	.827	.841	.796	.745	.764	.689	.655	.621	.658
02	.884	.815	.833	.785	.740	.763	.675	.645	.621	.651
03	.912	.805	.821	.775	.738	.757	.671	.638	.619	.653
04	.909	.787	.805	.766	.727	.751	.665	.629	.619	.648
05	.877	.770	.800	.756	.714	.753	.675	.626	.618	.639
06	.855	.766	.793	.741	.705	.750	.646	.618	.612	.629
07	.823	.745	.781	.726	.692	.745	.640	.617	.608	.623
08	.803	.729	.772	.720	.686	.739	.638	.613	.601	.617
09	.791	.710	.770	.709	.676	.736	.635	.612	.593	.608
10	.777	.704	.756	.691	.666	.718	.629	.614	.591	.613
11	.756	.694	.744	.683	.655	.713	.621	.609	.588	.607
12	.750	.672	.733	.673	.648	.696	.614	.603	.582	.602
13	.746	.659	.727	.661	.638	.682	.608	.598	.588	.598
14	.736	.653	.710	.649	.628	.666	.606	.591	.580	.593
15	.730	.642	.705	.639	.626	.652	.597	.585	.579	.594
16	.713	.629	.690	.632	.622	.638	.593	.578	.576	.589
17	.698	.608	.675	.625	.623	.626	.587	.574	.566	.581
18	.685	.625	.659	.615	.619	.621	.579	.576	.556	.582
19	.675	.616	.645	.611	.609	.618	.569	.576	.546	.580
20	.662	.606	.641	.601	.598	.613	.568	.575	.541	.570
21	.649	.605	.634	.598	.585	.613	.563	.570	.523	.567
22	.636	.604	.619	.589	.578	.606	.560	.562	.510	.557
23	.620	.608	.609	.585	.572	.592	.552	.548	.495	.548
24	.612	.602	.602	.581	.575	.588	.550	.534	.488	.539
25	.602	.594	.601	.573	.571	.586	.546	.528	.470	.520
26	.594	.584	.597	.572	.573	.584	.544	.517	.460	.511
27	.595	.574	.598	.575	.571	.581	.547	.506	.452	.500
28	.592	.572	.592	.568	.565	.578	.548	.494	.442	.492
29	.591	.565	.587	.560	.555	.573	.544	.485	.439	.482
30	.592	.563	.583	.553	.539	.568	.530	.468	.434	.471
31	.589	.564	.582	.551	.525	.568	.517	.455	.424	.461
32	.591	.560	.579	.545	.519	.552	.508	.443	.417	.456
33	.579	.554	.578	.530	.505	.540	.489	.435	.406	.452
34	.577	.541	.577	.520	.491	.526	.481	.424	.403	.448
35	.574	.538	.572	.515	.485	.514	.467	.419	.389	.444
36	.574	.531	.570	.507	.484	.503	.463	.415	.377	.435
37	.572	.517	.565	.498	.478	.497	.454	.407	.369	.430
38	.559	.509	.557	.490	.469	.492	.448	.393	.354	.419
39	.554	.500	.553	.487	.461	.486	.437	.381	.350	.413
40	.547	.491	.545	.474	.453	.483	.432	.371	.341	.403
41	.544	.483	.533	.460	.441	.485	.421	.355	.339	.395
42	.541	.473	.522	.451	.440	.480	.411	.344	.335	.381
43	.534	.463	.509	.448	.437	.475	.405	.335	.339	.372
44	.518	.454	.502	.438	.431	.464	.393	.320	.336	.363
45	.509	.441	.494	.433	.428	.455	.387	.317	.325	.357
46	.498	.435	.476	.425	.421	.451	.375	.319	.320	.356
47	.499	.427	.477	.415	.407	.445	.370	.311	.317	.360
48	.493	.419	.465	.409	.394	.442	.357	.297	.304	.357
49	.482	.417	.454	.400	.387	.436	.355	.290	.298	.364
50	.475	.408	.446	.392	.381	.427	.346	.279	.294	.360
51	.469	.398	.437	.386	.377	.414	.332	.272	.287	.355
52	.462	.390	.433	.376	.377	.413	.318	.265	.285	.345
53	.453	.382	.425	.368	.373	.406	.315	.263	.281	.336
54	.449	.380	.415	.357	.367	.398	.309	.255	.276	.330
55	.449	.374	.401	.350	.365	.397	.303	.253	.270	.324
56	.445	.369	.397	.348	.360	.397	.301	.251	.270	.320
57	.442	.363	.391	.349	.360	.392	.292	.245	.273	.313
58	.433	.367	.389	.348	.358	.388	.280	.239	.268	.314
59	.425	.369	.388	.346	.351	.385	.271	.237	.261	.301
60	.421	.370	.386	.343	.346	.385	.263	.235	.255	.300

Run No. 17 ; u component

	Separation Distance (m.)									
K	6	12	18	24	36	42	48	72	84	90
00	.537	.413	.287	.268	.172	.110	.144	.683,-1	.472,-1	.567,-1
01	.464	.348	.265	.276	.125	.967,-1	.140	.584,-1	.630,-1	9
02	.391	.270	.228	.265	.111	.627,-1	.142	.630,-1	.698,-1	.[illegible]4
03	.332	.222	.201	.233	.103	.599,-1	.144	.950,-1	.825,-1	.115
04	.312	.206	.169	.196	.848,-1	.544,-1	.139	.117	.121	.110
05	.283	.171	.123	.156	.678,-1	.561,-1	.135	.102	.141	.667,-1
06	.231	.142	.109	.132	.523,-1	.506,-1	.143	.121	.115	.500,-1
07	.222	.115	.999,-1	.121	.683,-1	.514,-1	.151	.126	.878,-1	.619,-1
08	.190	.933,-1	.911,-1	.122	.716,-1	.582,-1	.159	.143	.839,-1	.553,-1
09	.168	.909,-1	.807,-1	.122	.857,-1	.665,-1	.163	.158	.693,-1	.371,-1
10	.153	.856,-1	.879,-1	.947,-1	.871,-1	.541,-1	.164	.147	.538,-1	.292,-1
11	.112	.843,-1	.875,-1	.915,-1	.701,-1	.710,-1	.158	.134	.385,-1	.245,-1
12	.977,-1	.799,-1	.810,-1	.102	.626,-1	.682,-1	.125	.124	.344,-1	.455,-1
13	.111	.917,-1	.628,-1	.115	.693,-1	.481,-1	.115	.962,-1	.354,-1	.395,-1
14	.132	.801,-1	.482,-1	.106	.446,-1	.443,-1	.122	.699,-1	.325,-1	.277,-1
15	.140	.700,-1	.511,-1	.106	.459,-1	.350,-1	.114	.479,-1	.446,-1	.365,-1
16	.130	.426,-1	.576,-1	.878,-1	.273,-1	.209,-1	.958,-1	.430,-1	.319,-2	.343,-2
17	.110	.324,-1	.664,-1	.846,-1	-.670,-2	.400,-1	.846,-1	.296,-1	-.446,-2	-.262,-1
18	.100	.436,-1	.677,-1	.637,-1	-.747,-2	.456,-1	.691,-1	.273,-1	-.159,-1	-.514,-1
19	.700,-1	.535,-1	.278,-1	.626,-1	.188,-1	.592,-1	.671,-1	.207,-1	-.443,-1	-.461,-1
20	.726,-1	.435,-1	-.752,-2	.742,-1	.271,-1	.765,-1	.706,-1	.164,-1	-.580,-1	-.105,-1
21	.624,-1	.133,-2	-.249,-1	.645,-1	.446,-1	.677,-1	.787,-1	.755,-2	-.437,-1	-.997,-2
22	.516,-1	-.240,-1	-.243,-1	.554,-1	.727,-1	.415,-1	.872,-1	-.200,-1	-.249,-1	.171,-1
23	.334,-1	-.133,-1	-.146,-1	.493,-1	.752,-1	.169,-1	.622,-1	-.525,-2	-.182,-1	.106,-1
24	.249,-1	-.756,-2	-.176,-1	.592,-1	.469,-1	-.219,-1	.406,-1	.128,-1	.733,-2	-.592,-2
25	-.632,-2	-.110,-1	-.124,-1	.618,-1	.180,-1	-.302,-1	.259,-1	.985,-2	.121,-1	-.686,-2
26	.131,-1	-.973,-2	.124,-1	.763,-1	-.876,-2	-.529,-2	.114,-1	.338,-1	.214,-1	-.561,-2
27	.405,-1	.783,-2	.192,-1	.835,-1	-.186,-1	.428,-2	.127,-2	.464,-1	.337,-1	.203,-1
28	.460,-1	.351,-1	.124,-1	.618,-1	-.773,-3	.000	.175,-1	.369,-1	.391,-1	.150,-1
29	.420,-1	.293,-1	.177,-1	.319,-1	-.309,-2	-.159,-1	.991,-2	.426,-1	.318,-1	.436,-2
30	.459,-1	.458,-1	-.117,-1	.838,-2	-.799,-2	-.108,-1	-.991,-2	.703,-1	.335,-1	.779,-2
31	.181,-1	.210,-1	-.255,-1	.100,-1	-.309,-1	-.453,-2	-.508,-2	.734,-1	.144,-1	.237,-1
32	.113,-1	-.128,-1	-.304,-1	.266,-1	-.327,-1	.123,-1	.279,-2	.803,-1	-.861,-2	.358,-1
33	.219,-1	-.259,-1	-.163,-1	.311,-1	-.144,-1	.184,-1	.147,-1	.870,-1	.478,-2	.647,-1
34	-.152,-1	-.849,-2	-.215,-1	.354,-1	-.492,-2	.180,-1	.427,-1	.840,-1	.246,-1	.913,-1
35	-.285,-1	.102,-1	-.823,-2	.479,-1	.127,-1	.249,-1	.401,-1	.594,-1	.654,-1	.889,-1
36	-.356,-1	-.110,-2	-.120,-1	.423,-1	.372,-1	.337,-1	.508,-1	.223,-1	.815,-1	.644,-1
37	-.281,-1	.237,-1	-.758,-2	.336,-1	.401,-1	.341,-1	.597,-1	.315,-1	.903,-1	.774,-1
38	-.237,-1	.286,-1	-.227,-1	.614,-1	.496,-1	.151,-1	.800,-1	.627,-1	.880,-1	.667,-1
39	-.154,-1	.176,-1	-.395,-1	.833,-1	.656,-1	-.102,-1	.100	.702,-1	.102	.764,-1
40	-.267,-1	.132,-1	-.446,-1	.838,-1	.430,-1	-.241,-1	.113	.735,-1	.869,-1	.672,-1
41	-.527,-1	-.216,-1	-.424,-1	.990,-1	.260,-1	-.191,-1	.113	.101	.894,-1	.795,-1
42	-.632,-1	-.397,-1	-.565,-1	.125	.201,-1	-.838,-2	.117	.121	.724,-1	.968,-1
43	-.734,-1	-.468,-1	-.775,-1	.133	.953,-2	-.194,-2	.985,-1	.928,-1	.102	.861,-1
44	-.742,-1	-.617,-1	-.102	.117	.232,-2	-.113,-1	.939,-1	.733,-1	.110	.779,-1
45	-.649,-1	-.482,-1	-.773,-1	.777,-1	.613,-2	-.828,-2	.864,-1	.808,-1	.898,-1	.707,-1
46	-.812,-1	-.346,-1	-.685,-1	.402,-1	.183,-2	-.755,-3	.884,-1	.880,-1	.107	.439,-1
47	-.840,-1	-.383,-1	-.521,-1	.255,-1	.124,-1	-.252,-1	.953,-1	.822,-1	.910,-1	.386,-1
48	-.709,-1	-.296,-1	-.486,-1	.451,-2	.964,-2	-.404,-1	.112	.723,-1	.538,-1	.243,-1
49	-.814,-1	-.207,-1	-.674,-1	.982,-2	-.224,-2	-.473,-1	.106	.844,-1	.370,-1	.810,-2
50	-.829,-1	-.359,-1	-.473,-1	.312,-1	-.765,-2	-.340,-1	.108	.766,-1	.246,-1	.499,-2
51	-.898,-1	-.506,-1	-.285,-1	.183,-1	-.101,-1	-.560,-1	.983,-1	.511,-1	.185,-1	-.218,-2
52	-.563,-1	-.515,-1	.758,-2	.504,-2	-.876,-2	-.219,-1	.785,-1	.336,-1	.153,-1	-.284,-1
53	-.236,-1	-.252,-1	.261,-1	-.531,-2	-.155,-2	-.242,-1	.581,-1	.186,-1	.223,-1	-.306,-1
54	.891,-2	-.223,-2	.239,-1	-.194,-1	.283,-1	-.330,-1	.329,-1	.248,-1	.128,-2	-.178,-1
55	.223,-1	.136,-1	.152,-1	-.456,-1	.283,-1	-.337,-1	.166,-1	.370,-1	.733,-2	-.122,-1
56	.187,-1	.105,-1	.200,-1	-.302,-1	.162,-1	-.277,-1	.324,-2	.353,-1	.131,-1	-.203,-1
57	.312,-1	.513,-2	.237,-1	-.122,-1	.263,-1	-.282,-1	.248,-1	.440,-1	.166,-1	.109,-1
58	.299,-1	-.105,-1	.713,-2	.796,-2	.242,-1	-.247,-1	.131,-1	.385,-1	.260,-1	.717,-2
59	.168,-1	.809,-2	-.456,-2	.194,-1	.541,-2	-.181,-1	.293,-1	.351,-1	.201,-1	.224,-1
60	.166,-1	.341,-1	-.247,-1	.127,-1	.100,-1	-.222,-1	.476,-1	.354,-1	.489,-1	.203,-1

Run No. 17 ; v component

Separation Distance (m.)

K	6	12	18	24	36	42	48	72	84	90
00	.155	.471,-1	.144	.825,-1	.697,-1	.759,-1	.105	.101	.162	.241
01	.126	.636,-1	.123	.235,-1	.542,-1	.648,-1	.805,-1	.113	.140	.252
02	.117	.884,-1	.102	.626,-1	.976,-1	.120	.461,-1	.114	.160	.253
03	.132	.106	.747,-1	.996,-1	.847,-1	.116	.709,-1	.117	.188	.222
04	.928,-1	.105	.885,-1	.108	.677,-1	.906,-1	.118	.984,-1	.187	.185
05	.482,-1	.117	.454,-1	.666,-1	.482,-1	.831,-1	.102	.104	.190	.201
06	.855,-1	.946,-1	.110	.663,-1	.368,-1	.428,-1	.771,-1	.133	.200	.259
07	.111	.639,-1	.105	.398,-1	.704,-1	.467,-1	.106	.128	.235	.208
08	.826,-1	.108	.862,-1	.284,-1	.721,-1	.648,-1	.783,-1	.116	.249	.122
09	.380,-1	.108	.759,-1	.102	.461,-1	.613,-1	.903,-1	.162	.193	.881,-1
10	.273,-1	.102	.788,-1	.729,-1	.412,-1	.896,-1	.892,-1	.153	.179	.639,-1
11	.653,-1	.870,-1	.726,-1	.943,-1	.585,-1	.700,-1	.941,-1	.161	.238	.513,-1
12	.676,-1	.779,-1	.723,-1	.753,-1	.483,-1	.519,-1	.917,-1	.139	.131	.166,-1
13	.511,-1	.109	.863,-1	.854,-1	.622,-1	.592,-1	.123	.157	.611,-1	.304,-1
14	.355,-1	.109	.316,-1	.754,-1	.690,-1	.677,-1	.108	.145	.711,-1	.425,-1
15	.801,-1	.925,-1	.724,-1	.480,-1	.464,-1	.552,-1	.549,-1	.147	.754,-1	.457,-1
16	.435,-1	.641,-1	.589,-1	.520,-1	.493,-1	.391,-1	.509,-1	.171	.516,-1	.269,-1
17	.501,-1	.567,-1	.701,-1	.486,-1	.158,-1	-.145,-1	.700,-1	.190	.308,-1	.654,-1
18	.545,-1	.479,-1	.697,-1	.924,-1	.276,-1	.240,-1	.694,-1	.120	-.125,-2	.267,-1
19	.221,-1	.178,-1	.366,-1	.728,-1	.980,-2	.336,-1	.523,-1	.869,-1	.320,-1	.586,-1
20	.385,-1	.612,-1	.723,-1	.932,-1	.413,-1	.352,-1	.649,-1	.694,-1	.6[illegible]7,-1	.739,-1
21	.759,-1	.464,-1	.690,-1	.718,-1	.243,-2	.542,-1	.552,-1	.738,-1	.4[illegible]7,-1	.460,-1
22	.551,-1	.470,-1	.591,-1	.540,-1	.105,-1	.518,-1	.554,-1	.802,-1	.5[illegible]2,-1	.705,-1
23	.259,-1	.736,-1	.101	.693,-1	.262,-1	.662,-1	.100	.872,-1	.7[illegible]7,-1	.663,-1
24	.304,-1	.862,-1	.899,-1	.522,-1	.229,-1	.642,-1	.616,-1	.272,-1	.5[illegible]8,-1	.563,-1
25	.463,-1	.789,-1	.104	.358,-1	.195,-1	.492,-1	.726,-1	.406,-1	.667,-1	.533,-1
26	.352,-1	.789,-1	.482,-1	.339,-1	.333,-1	.654,-2	.111	.679,-1	.738,-1	.449,-1
27	.444,-1	.752,-1	.535,-1	.568,-1	.164,-1	.416,-1	.919,-1	.866,-1	.625,-1	.515,-1
28	.888,-1	.332,-1	.268,-1	.769,-1	.659,-1	-.108,-2	.642,-1	.915,-1	.496,-1	.638,-1
29	.976,-1	.399,-1	.663,-1	.105	.140,-1	.175,-1	.939,-1	.932,-1	.320,-1	.880,-1
30	.487,-1	.663,-1	.631,-1	.674,-1	-.129,-1	.465,-1	.904,-1	.129	.286,-1	.505,-1
31	.405,-1	.543,-1	.132	.842,-1	.295,-1	.677,-2	.948,-1	.618,-1	.672,-1	.766,-1
32	.629,-1	.460,-1	.814,-1	.731,-1	-.115,-1	.182,-1	.805,-1	.125,-1	.659,-1	.537,-1
33	.404,-1	.526,-1	.103	.101	.641,-2	.181,-1	.970,-1	.367,-1	.659,-1	.476,-1
34	.842,-1	.445,-1	.853,-1	.619,-1	.624,-1	.778,-1	.783,-1	-.577,-2	.659,-1	.363,-1
35	.839,-1	.650,-1	.480,-1	.323,-1	.231,-1	.480,-1	.512,-1	.218,-1	.772,-1	.212,-1
36	.579,-1	.548,-1	.418,-1	.554,-1	.133,-1	.297,-1	.850,-1	.965,-1	.130	.709,-1
37	.451,-1	.535,-1	.611,-1	.523,-1	-.774,-2	.599,-1	.640,-1	.661,-1	.719,-1	.163,-1
38	.575,-1	.798,-1	.713,-1	.722,-1	.128,-1	.656,-1	.852,-1	.905,-1	.853,-1	.187,-1
39	.448,-1	.732,-1	.681,-1	.639,-1	.416,-1	.863,-1	.712,-1	.797,-1	.578,-1	.643,-1
40	.997,-1	.823,-1	.115	.277,-1	.424,-1	.933,-1	.801,-1	.742,-1	.605,-1	.617,-1
41	.913,-1	.275,-1	.745,-1	.773,-1	.338,-1	.986,-1	.460,-1	.470,-1	.348,-1	.405,-1
42	.677,-1	.564,-1	.853,-1	.761,-1	.342,-1	.580,-1	.827,-1	.859,-1	.724,-2	.237,-1
43	.821,-1	.442,-1	.977,-1	.369,-1	.353,-1	.705,-1	.883,-1	.125	.217,-2	.852,-1
44	.941,-1	.314,-1	.698,-1	.327,-1	.758,-1	.658,-1	.746,-1	.838,-1	.243,-1	.882,-1
45	.856,-1	.258,-1	.571,-1	.633,-1	.483,-1	.601,-1	.750,-1	.425,-1	.788,-1	.837,-1
46	.976,-1	.795,-1	.497,-1	.448,-1	.881,-1	.573,-1	.504,-1	.653,-1	.838,-1	.498,-1
47	.107	.750,-1	.767,-1	.551,-1	.725,-1	.717,-1	.577,-1	.772,-1	.733,-1	.109
48	.720,-1	.512,-1	.105	.399,-1	.612,-1	.727,-1	.200,-1	.565,-1	.376,-1	.934,-1
49	.406,-1	.702,-1	.876,-1	.950,-2	.926,-1	.575,-1	.949,-2	.975,-1	.539,-1	.867,-1
50	.801,-1	.595,-1	.104	.254,-1	.387,-1	.532,-1	.117,-1	.967,-1	.844,-1	.891,-1
51	.635,-1	.804,-1	.752,-1	.675,-2	.419,-1	.480,-1	.104,-1	.695,-1	.929,-1	.845,-1
52	.998,-1	.513,-1	.901,-1	.428,-1	.588,-1	.512,-1	.908,-2	.487,-1	.921,-1	.498,-1
53	.986,-1	.789,-1	.111	.100	.454,-1	.689,-1	.380,-1	.644,-1	.758,-1	.963,-1
54	.558,-1	.733,-1	.603,-1	.741,-1	.560,-2	.817,-1	.354,-1	.853,-1	.494,-1	.991,-1
55	.855,-1	.102	.545,-1	.555,-1	.267,-1	.624,-1	.299,-1	.111	.558,-1	.779,-1
56	.901,-1	.354,-1	.644,-1	.773,-1	.278,-1	.472,-1	.328,-1	.110	.629,-1	.616,-1
57	.864,-1	.964,-3	.292,-1	.244,-1	.583,-1	.275,-1	.200,-1	.127	.721,-1	.109
58	.501,-1	-.701,-2	.308,-1	.412,-1	.893,-1	.400,-2	-.276,-2	.871,-1	.561,-1	.127
59	.702,-2	.911,-1	-.805,-2	.869,-1	.985,-1	.219,-1	.110,-1	.115	.409,-1	.947,-1
60	.975,-1	.565,-1	.547,-1	-.277,-2	.844,-1	.745,-1	.281,-1	.670,-1	.752,-1	.310,-1

Run No. 17 ; v component

Separation Distance (m.)

K	6	12	18	24	36	42	48	72	84	90
00	.383,-1	-.209,-2	.269,-1	-.446,-1	-.507,-1	-.476,-1	.158,-1	-.305,-1	.722,-2	.349,-2
01	-.269,-1	.225,-1	.196,-1	.684,-1	-.254,-1	.415,-1	.249,-1	-.378,-1	.638,-1	.124,-1
02	.245,-1	.401,-1	.110,-1	.576,-1	.402,-2	.333,-1	-.314,-1	-.263,-1	.459,-1	.375,-1
03	-.286,-1	-.795,-2	.143,-2	.269,-1	.270,-1	-.241,-1	.524,-1	-.337,-1	.128,-1	-.118,-1
04	.558,-1	.117,-2	-.800,-2	.227,-1	.196,-1	-.843,-2	-.657,-2	-.112,-1	.270,-1	-.227,-1
05	.258,-1	.613,-2	.281,-1	.590,-1	.349,-1	.333,-1	-.115,-1	-.142,-1	-.433,-2	-.442,-1
06	-.336,-1	.161,-1	.222,-1	.469,-1	.353,-1	-.272,-1	-.612,-3	.451,-1	.115,-1	-.272,-1
07	-.340,-1	-.929,-2	.466,-2	.321,-1	-.619,-2	-.332,-1	.302,-1	.455,-1	-.901,-2	-.607,-1
08	.381,-2	-.645,-2	.324,-1	.262,-1	.801,-2	-.748,-1	-.104,-1	.766,-2	-.246,-1	.385,-2
09	.276,-1	.265,-1	-.354,-1	-.706,-2	.180,-1	-.293,-1	-.789,-2	.524,-2	.582,-1	-.339,-1
10	-.775,-2	.812,-2	-.475,-1	.436,-1	-.404,-1	-.772,-1	.402,-1	.149,-1	.174,-1	-.144,-1
11	.732,-3	-.914,-1	-.393,-1	-.424,-1	-.746,-1	-.189,-1	-.304,-2	-.281,-1	-.173,-1	-.209,-1
12	.347,-1	-.282,-1	.255,-1	-.200,-1	-.375,-1	-.594,-1	-.899,-3	-.228,-1	.969,-2	-.343,-1
13	.172,-1	-.270,-1	.153,-1	-.958,-2	-.536,-1	.141,-1	-.973,-2	-.131,-2	-.547,-1	-.125,-1
14	.207,-1	.884,-2	-.196,-2	-.118,-1	-.750,-1	.165,-1	.180,-3	.129,-1	-.139,-1	.943,-2
15	-.124,-1	.418,-1	.436,-1	-.555,-2	-.438,-1	.840,-1	.894,-1	.500,-1	.557,-1	.743,-2
16	.861,-2	.255,-1	-.202,-1	.465,-2	-.213,-1	.310,-1	-.356,-2	.226,-1	.648,-1	.179,-1
17	.357,-1	-.283,-1	.167,-3	-.247,-1	.255,-1	-.435,-1	.313,-1	-.361,-1	.463,-1	-.237,-2
18	.138,-1	-.198,-1	.609,-1	-.192,-1	.134,-1	-.341,-1	.951,-1	.988,-2	.559,-1	-.501,-1
19	-.476,-1	.422,-1	.575,-1	-.127,-1	.906,-2	.628,-2	-.113,-1	.126,-1	.757,-2	.386,-1
20	-.861,-1	.192,-1	.143,-1	-.334,-2	.475,-2	.318,-1	.160,-1	.410,-2	.207,-1	-.175,-1
21	.446,-2	-.210,-1	.748,-1	.341,-1	.179,-1	.263,-1	-.140,-2	.305,-2	.202,-1	-.470,-1
22	.195,-2	.439,-1	.133,-1	-.128,-1	.327,-1	-.574,-2	.400,-1	.179,-1	-.102,-1	-.470,-1
23	.367,-1	-.157,-1	.263,-1	-.342,-1	.108,-1	-.529,-2	.311,-1	.656,-1	-.166,-1	-.281,-1
24	.376,-1	-.366,-1	-.233,-1	-.149,-1	.432,-1	.141,-1	-.518,-2	.425,-1	-.144,-1	.858,-2
25	-.818,-2	-.407,-1	-.901,-2	.326,-1	-.604,-1	-.555,-1	-.226,-1	.268,-1	-.412,-1	-.734,-2
26	.232,-2	-.202,-2	.502,-2	-.449,-1	-.801,-1	-.447,-1	-.138,-1	.700,-1	-.471,-1	.428,-1
27	.354,-1	.349,-1	-.305,-1	-.260,-1	-.384,-1	-.416,-2	-.189,-1	.495,-1	.388,-1	-.199,-1
28	.561,-2	-.438,-1	-.653,-1	-.494,-1	-.100,-1	.125,-1	.176,-1	.391,-1	-.612,-2	.268,-1
29	.813,-2	-.133,-1	-.222,-1	-.560,-1	.234,-1	.653,-2	-.701,-2	.198,-1	-.341,-2	.140,-1
30	.293,-2	-.342,-4	.308,-1	-.363,-1	.191,-1	-.353,-1	.430,-1	-.414,-1	.694,-2	.619,-1
31	-.581,-2	-.140,-1	-.372,-1	-.268,-1	.797,-2	-.121,-1	-.133,-1	-.635,-2	.396,-1	.390,-1
32	-.952,-2	.906,-2	.119,-3	.800,-1	-.106,-1	-.218,-2	.421,-1	-.270,-1	-.213,-2	.851,-2
33	.692,-1	.354,-1	.400,-1	.250,-1	-.353,-2	.142,-1	.129,-2	.332,-2	.123,-1	.441,-1
34	.338,-1	-.812,-2	-.161,-1	-.623,-2	.473,-1	-.366,-1	-.103,-1	-.229,-1	-.359,-1	-.398,-1
35	.481,-1	.156,-1	.300,-1	-.395,-2	-.742,-2	-.591,-1	-.290,-2	.540,-1	-.318,-2	-.258,-1
36	-.287,-1	-.467,-1	.275,-1	-.161,-1	-.757,-2	-.733,-2	-.223,-1	.202,-2	-.341,-1	-.263,-2
37	.126,-1	.236,-1	.177,-1	-.161,-1	-.297,-3	.215,-1	-.434,-1	-.717,-2	-.804,-2	.722,-2
38	.684,-2	.663,-1	.834,-1	-.134,-1	-.728,-2	-.403,-2	-.148,-1	.241,-1	-.151,-1	-.149,-1
39	.132,-1	.559,-2	.575,-1	.169,-1	-.786,-2	-.231,-1	.229,-1	-.267,-1	-.473,-1	-.355,-1
40	-.348,-1	.563,-1	.324,-1	.857,-2	-.324,-1	.761,-3	-.522,-2	-.233,-1	-.474,-1	-.497,-1
41	.366,-3	.112,-1	.234,-1	.486,-1	-.418,-2	-.474,-1	-.522,-2	-.514,-1	-.208,-1	-.193,-1
42	.535,-1	-.247,-1	.645,-2	.515,-1	-.675,-1	-.492,-1	-.962,-2	-.661,-1	.638,-2	.491,-2
43	.242,-1	.326,-2	.171,-1	.430,-1	-.831,-1	.924,-2	-.450,-2	.108,-1	-.186,-1	.202,-1
44	.158,-1	-.142,-1	-.430,-1	.543,-1	-.263,-1	-.118,-1	-.273,-1	-.332,-1	.256,-1	-.200,-1
45	.200,-1	-.190,-1	.215,-1	.279,-2	-.208,-1	-.462,-3	.146,-1	-.425,-1	-.390,-1	.368,-2
46	.229,-1	-.163,-1	-.123,-1	.685,-1	.525,-2	.922,-2	.166,-1	-.373,-1	-.299,-1	-.730,-2
47	-.204,-1	.139,-1	.345,-1	.135,-1	.163,-2	-.301,-1	-.194,-1	.503,-1	-.345,-1	.222,-2
48	-.898,-2	.328,-1	.939,-2	-.179,-1	-.226,-1	-.958,-1	-.130,-1	-.580,-1	-.620,-1	.435,-1
49	.247,-1	.277,-1	-.591,-1	-.114,-1	-.681,-1	-.132,-1	-.130,-1	-.120,-1	-.426,-1	-.181,-2
50	.214,-1	-.387,-1	-.534,-1	.233,-1	-.162,-1	.912,-2	.264,-1	-.686,-1	-.347,-1	-.281,-1
51	.112,-1	-.397,-1	-.399,-2	.224,-1	-.475,-2	.156,-1	-.236,-1	.282,-1	-.292,-1	-.405,-1
52	.696,-1	-.169,-2	.207,-1	-.771,-2	-.786,-2	.106,-1	.208,-1	-.183,-1	-.224,-1	.592,-3
53	.561,-3	.414,-1	.585,-2	-.508,-1	-.306,-1	-.164,-1	.609,-2	.332,-3	-.106,-1	-.374,-1
54	-.427,-2	.150,-1	.561,-2	-.250,-1	.152,-1	-.615,-1	.190,-1	-.104,-1	-.266,-1	-.474,-1
55	-.905,-2	.199,-1	.108,-1	.595,-3	-.400,-1	-.311,-1	.589,-1	-.130,-1	-.438,-1	-.109,-1
56	.192,-1	.122,-1	.167,-2	-.347,-1	-.669,-1	.262,-2	-.265,-1	.115,-1	-.482,-1	.349,-1
57	.724,-2	.932,-2	.334,-1	-.507,-2	-.355,-1	.407,-1	.290,-1	-.190,-2	-.301,-1	-.180,-1
58	.208,-1	.5 ,-1	.438,-1	.929,-2	-.156,-1	.286,-3	.253,-1	-.817,-2	-.975,-2	-.148,-3
59	.402,-1	-.25 ,-1	.224,-1	-.146,-1	.429,-1	.112,-1	.639,-1	-.152,-1	.219,-1	.478,-1
60	.645,-1	.907,-2	-.311,-1	.217,-1	-.313,-1	-.370,-1	.344,-1	.152,-1	.859,-1	-.168,-1

Run No. 21 ; u component

	Separation Distance (m.)									
K	6	12	18	24	36	42	48	72	84	90
00	.806	.709	.626	.528	.483	.469	.433	.358	.363	.370
01	.714	.644	.583	.489	.457	.454	.402	.357	.363	.370
02	.647	.588	.560	.444	.437	.440	.380	.377	.368	.367
03	.601	.565	.542	.410	.426	.435	.364	.378	.366	.368
04	.574	.546	.524	.402	.429	.449	.364	.386	.354	.365
05	.552	.526	.506	.385	.441	.464	.350	.373	.341	.344
06	.523	.503	.475	.385	.454	.446	.347	.355	.327	.326
07	.492	.472	.468	.393	.447	.447	.348	.341	.309	.320
08	.478	.457	.443	.394	.429	.427	.352	.334	.303	.326
09	.455	.439	.442	.399	.407	.431	.339	.323	.309	.336
10	.455	.436	.450	.392	.408	.421	.321	.308	.306	.344
11	.462	.434	.442	.363	.396	.422	.298	.292	.298	.332
12	.465	.419	.434	.356	.391	.419	.286	.274	.289	.322
13	.459	.410	.427	.351	.386	.414	.283	.266	.278	.325
14	.456	.407	.410	.317	.371	.381	.294	.254	.286	.318
15	.449	.386	.409	.295	.339	.353	.296	.236	.284	.305
16	.453	.383	.415	.287	.308	.348	.285	.251	.267	.296
17	.443	.383	.404	.278	.295	.345	.279	.249	.261	.305
18	.438	.364	.391	.256	.295	.339	.273	.243	.249	.293
19	.433	.358	.372	.255	.304	.336	.270	.233	.249	.283
20	.417	.339	.354	.260	.294	.335	.249	.219	.248	.272
21	.400	.319	.345	.269	.290	.312	.244	.217	.234	.259
22	.385	.301	.342	.250	.273	.301	.262	.220	.231	.261
23	.373	.305	.343	.240	.258	.296	.246	.225	.239	.283
24	.353	.305	.349	.230	.266	.292	.235	.220	.248	.291
25	.364	.305	.344	.235	.267	.310	.236	.229	.255	.284
26	.361	.301	.339	.242	.264	.308	.242	.244	.255	.303
27	.348	.286	.303	.243	.255	.280	.262	.254	.273	.318
28	.349	.264	.290	.248	.249	.277	.263	.277	.286	.337
29	.337	.251	.299	.243	.237	.278	.256	.287	.304	.344
30	.341	.258	.286	.239	.249	.291	.262	.297	.329	.352
31	.339	.252	.278	.244	.266	.286	.269	.307	.329	.340
32	.332	.251	.276	.251	.265	.277	.274	.317	.315	.329
33	.326	.247	.272	.230	.248	.273	.278	.300	.309	.313
34	.320	.240	.280	.239	.241	.278	.296	.296	.299	.311
35	.323	.240	.286	.233	.254	.235	.295	.300	.292	.311
36	.325	.250	.283	.238	.254	.291	.289	.285	.289	.300
37	.337	.253	.277	.248	.258	.280	.287	.291	.279	.290
38	.325	.247	.274	.252	.254	.276	.274	.299	.278	.285
39	.321	.245	.253	.243	.239	.261	.280	.277	.279	.285
40	.289	.225	.252	.249	.236	.257	.284	.277	.287	.281
41	.278	.224	.256	.244	.228	.252	.293	.286	.271	.262
42	.279	.237	.256	.231	.221	.256	.306	.283	.251	.257
43	.281	.232	.257	.221	.218	.249	.316	.264	.249	.252
44	.274	.214	.254	.236	.211	.224	.306	.272	.243	.252
45	.259	.200	.241	.233	.195	.204	.307	.266	.239	.255
46	.245	.193	.226	.212	.182	.205	.310	.251	.242	.257
47	.229	.185	.202	.200	.181	.207	.328	.236	.253	.274
48	.225	.178	.181	.193	.178	.203	.322	.227	.267	.268
49	.252	.162	.167	.195	.183	.200	.317	.227	.269	.272
50	.205	.141	.162	.197	.185	.205	.307	.235	.263	.274
51	.194	.147	.168	.186	.186	.203	.305	.243	.258	.288
52	.184	.148	.170	.193	.200	.204	.284	.239	.259	.313
53	.188	.159	.176	.210	.207	.199	.287	.255	.260	.324
54	.198	.165	.190	.218	.198	.210	.294	.237	.294	.314
55	.215	.185	.204	.221	.200	.200	.288	.241	.293	.304
56	.210	.200	.192	.215	.192	.214	.290	.250	.287	.303
57	.202	.201	.191	.224	.196	.237	.295	.251	.279	.292
58	.205	.190	.188	.216	.207	.228	.292	.251	.280	.283
59	.207	.186	.195	.220	.207	.228	.271	.259	.277	.278
60	.205	.198	.197	.199	.207	.227	.255	.263	.255	.277

Run No. 21 ; v component

K	Separation Distance (a.) 6	12	18	24	36	42	48	72	84	90
00	.453	.398	.325	.321	.241	.192	.298	.243	.191	.260
01	.356	.329	.254	.260	.270	.183	.274	.214	.257	.251
02	.258	.280	.210	.274	.244	.205	.277	.227	.253	.213
03	.244	.243	.211	.262	.217	.183	.247	.243	.200	.218
04	.214	.247	.179	.231	.186	.151	.245	.243	.225	.202
05	.181	.222	.153	.197	.155	.174	.247	.233	.228	.199
06	.164	.187	.147	.154	.182	.167	.257	.246	.195	.182
07	.179	.158	.145	.189	.159	.202	.224	.242	.206	.202
08	.172	.158	.170	.182	.189	.173	.223	.236	.212	.187
09	.188	.177	.150	.188	.183	.193	.237	.241	.196	.197
10	.184	.187	.134	.200	.181	.197	.253	.196	.197	.198
11	.181	.140	.173	.169	.191	.165	.227	.189	.181	.209
12	.197	.149	.161	.164	.150	.147	.231	.194	.190	.199
13	.150	.146	.160	.158	.153	.171	.205	.200	.218	.215
14	.167	.187	.189	.183	.175	.157	.241	.201	.212	.237
15	.161	.174	.189	.190	.169	.162	.224	.251	.208	.250
16	.151	.169	.160	.181	.167	.169	.214	.235	.220	.216
17	.162	.149	.164	.154	.125	.146	.230	.248	.207	.205
18	.185	.172	.150	.197	.132	.156	.222	.221	.226	.207
19	.153	.157	.148	.152	.129	.183	.235	.197	.223	.238
20	.143	.143	.167	.147	.169	.168	.235	.228	.227	.209
21	.148	.140	.145	.162	.177	.176	.226	.250	.191	.196
22	.153	.131	.155	.205	.172	.200	.217	.211	.204	.202
23	.172	.130	.191	.193	.156	.175	.202	.209	.209	.250
24	.198	.131	.156	.178	.175	.177	.187	.195	.222	.216
25	.186	.157	.133	.172	.175	.157	.198	.191	.222	.184
26	.140	.150	.148	.187	.150	.164	.233	.224	.176	.147
27	.120	.109	.143	.182	.154	.185	.197	.202	.145	.168
28	.148	.117	.133	.153	.139	.201	.170	.205	.204	.159
29	.161	.131	.130	.135	.179	.173	.180	.227	.192	.177
30	.141	.154	.110	.160	.165	.149	.172	.217	.171	.179
31	.137	.108	.141	.174	.149	.158	.207	.190	.174	.168
32	.138	.134	.133	.183	.151	.128	.213	.207	.174	.160
33	.155	.127	.148	.164	.148	.137	.210	.219	.156	.223
34	.174	.137	.116	.167	.136	.108	.216	.186	.209	.198
35	.140	.105	.967,-1	.170	.102	.134	.186	.191	.205	.173
36	.953,-1	.794,-1	.964,-1	.117	.151	.138	.191	.217	.193	.198
37	.118	.772,-1	.884,-1	.155	.129	.185	.213	.233	.187	.202
38	.860,-1	.114	.766,-1	.156	.182	.151	.207	.184	.219	.207
39	.987,-1	.112	.146	.162	.121	.163	.193	.216	.231	.175
40	.105	.119	.111	.134	.149	.179	.176	.244	.191	.181
41	.123	.114	.148	.172	.168	.183	.220	.224	.222	.209
42	.146	.169	.158	.207	.192	.166	.219	.237	.198	.173
43	.170	.157	.167	.217	.158	.132	.205	.205	.200	.176
44	.200	.168	.168	.199	.151	.120	.212	.197	.214	.172
45	.134	.144	.137	.180	.136	.137	.173	.172	.191	.162
46	.150	.150	.116	.162	.171	.133	.166	.199	.179	.168
47	.138	.143	.109	.183	.177	.150	.168	.200	.184	.155
48	.134	.113	.102	.163	.157	.154	.166	.180	.177	.164
49	.103	.121	.108	.160	.168	.142	.155	.187	.169	.169
50	.133	.137	.117	.183	.137	.148	.180	.181	.178	.123
51	.930,-1	.134	.112	.166	.179	.159	.166	.198	.165	.133
52	.118	.152	.114	.165	.179	.154	.184	.160	.163	.147
53	.122	.171	.134	.150	.172	.156	.218	.164	.151	.128
54	.144	.182	.136	.149	.167	.168	.188	.133	.164	.133
55	.150	.159	.151	.159	.202	.159	.145	.158	.174	.142
56	.155	.156	.181	.160	.172	.134	.123	.176	.133	.164
57	.162	.169	.155	.150	.139	.129	.146	.178	.166	.147
58	.143	.185	.148	.146	.108	.162	.174	.175	.145	.162
59	.166	.164	.122	.159	.116	.128	.154	.148	.165	.124
60	.161	.106	.131	.136	.158	.116	.180	.152	.144	.153

Run No. 21 ; x component

K	Separation Distance (m.)									
	6	12	18	24	36	42	48	72	84	90
00	.490,-1	.655,-3	.507,-1	.413,-1	-.137,-1	.277,-1	-.330,-1	.350,-1	.111,-2	-.360,-1
01	.587,-1	.846,-1	-.863,-2	.415,-1	-.309,-1	-.475,-1	.681,-3	-.203,-1	.914,-2	.900,-2
02	.134,-1	.836,-2	-.133,-2	.313,-1	-.730,-2	.339,-1	-.381,-1	-.242,-1	.737,-1	.217,-1
03	-.334,-2	.165,-1	.552,-2	-.216,-1	-.296,-1	-.271,-1	.221,-2	.310,-1	-.416,-1	.250,-1
04	.409,-1	.346,-1	-.146,-1	.122,-3	-.435,-2	-.154,-1	.214,-1	.207,-1	.144,-1	.321,-1
05	.196,-1	.713,-1	.387,-1	-.172,-2	-.281,-1	-.138,-2	-.175,-1	.116,-1	.279,-1	.122,-1
06	.413,-1	.250,-1	.581,-1	.124,-1	.370,-1	-.123,-1	.607,-2	.331,-1	.805,-1	-.189,-1
07	.371,-1	.940,-1	-.979,-2	-.147,-1	.317,-2	.344,-1	-.358,-1	.380,-1	-.926,-2	-.930,-2
08	-.602,-2	.137,-1	.233,-1	.129,-1	.555,-1	.467,-1	-.145,-2	.140,-2	-.911,-2	.275,-1
09	.280,-1	.490,-1	-.227,-2	-.292,-1	-.244,-1	.191,-1	-.347,-2	.247,-2	.639,-2	.177,-1
10	.466,-2	.339,-1	-.467,-1	-.110,-1	.504,-2	.394,-2	.170,-1	-.643,-2	.330,-2	-.107,-1
11	.171,-1	-.196,-1	.178,-1	-.476,-2	-.184,-1	-.103,-1	.854,-2	.469,-2	-.836,-1	.960,-2
12	.816,-2	-.299,-1	.362,-1	-.415,-1	-.484,-1	.197,-1	.748,-2	-.164,-1	.802,-2	-.502,-2
13	.594,-1	-.405,-1	-.583,-2	.186,-2	.137,-1	.400,-1	.170,-1	.376,-1	-.309,-1	-.247,-1
14	.380,-1	.473,-1	-.288,-1	.204,-1	.182,-1	.298,-1	.717,-1	.188,-2	-.294,-1	.576,-1
15	-.148,-2	.191,-1	.328,-1	-.446,-1	.900,-2	.445,-1	-.562,-1	.322,-1	-.275,-1	.554,-1
16	.256,-1	.154,-1	.314,-1	.337,-1	-.593,-1	.187,-1	-.188,-1	.161,-2	.344,-1	-.756,-2
17	-.178,-1	-.168,-2	.609,-2	.158,-1	.233,-1	.868,-2	.253,-1	.291,-1	-.617,-1	-.254,-2
18	.408,-1	.207,-1	-.244,-1	-.235,-1	.249,-1	.963,-2	-.244,-1	-.241,-1	.306,-1	-.137,-1
19	.291,-2	-.468,-1	.291,-1	-.892,-2	-.441,-1	-.176,-1	-.165,-1	-.137,-1	.775,-2	.105,-1
20	.176,-1	-.133,-1	-.545,-1	-.152,-1	-.211,-1	.364,-1	.500,-1	-.177,-2	.299,-1	.455,-1
21	.167,-2	-.376,-1	.569,-1	.930,-2	-.550,-1	-.435,-1	.219,-1	-.562,-2	-.278,-1	.462,-2
22	.610,-1	.178,-1	-.457,-1	.492,-1	-.728,-1	.111,-1	-.509,-1	.801,-2	.777,-1	-.147,-1
23	.365,-2	.899,-2	.106,-1	-.581,-2	-.832,-2	-.336,-1	-.168,-1	-.570,-2	.188,-1	.661,-3
24	-.255,-1	-.151,-2	.694,-1	-.128,-1	-.214,-1	-.451,-2	-.286,-1	-.194,-1	.276,-1	-.228,-1
25	-.208,-1	.405,-1	.277,-1	-.212,-1	-.109,-1	.520,-1	.219,-1	-.468,-2	-.561,-1	.227,-1
26	-.204,-1	-.244,-2	-.492,-1	-.609,-1	-.260,-1	.274,-1	-.217,-1	-.161,-1	.288,-1	.115,-1
27	.258,-1	.179,-1	.239,-1	-.305,-1	.968,-2	.160,-1	.224,-1	-.610,-2	.329,-1	.123,-1
28	.787,-2	-.492,-2	-.380,-1	-.708,-2	.432,-2	-.434,-1	.196,-1	-.191,-1	.249,-2	.456,-1
29	.615,-1	.124,-1	.163,-1	.222,-1	-.179,-2	.830,-2	-.811,-2	.515,-1	.312,-1	.579,-1
30	-.696,-1	.786,-2	.207,-1	.101,-1	-.147,-1	-.417,-1	.163,-1	.179,-1	.411,-1	.408,-1
31	.114,-1	.115,-1	-.925,-2	-.813,-2	.386,-1	-.319,-1	.437,-1	.229,-1	.690,-1	-.159,-1
32	.289,-1	.363,-1	.525,-2	.339,-1	-.432,-1	.174,-2	.285,-1	.493,-1	.463,-1	.281,-1
33	-.163,-1	.441,-3	-.947,-2	.766,-2	-.386,-2	.461,-2	-.235,-1	.137,-1	.939,-4	.799,-1
34	.399,-1	.134,-1	-.693,-1	.475,-1	-.308,-1	-.482,-1	-.133,-1	.162,-1	.313,-1	.110,-1
35	.218,-1	.394,-1	-.115,-1	.393,-2	.303,-1	.123,-1	-.186,-1	.257,-1	.133,-1	.254,-1
36	-.327,-1	-.304,-1	.239,-1	-.104,-1	-.493,-2	-.881,-2	-.319,-1	.181,-1	-.168,-1	.497,-3
37	.431,-1	.467,-1	.415,-2	-.260,-1	.793,-2	.923,-2	.755,-2	.116,-1	-.259,-2	-.126,-1
38	.609,-1	-.588,-3	.305,-1	.153,-1	-.237,-2	-.589,-2	.208,-1	-.111,-1	-.512,-3	.209,-2
39	-.742,-2	.473,-1	.622,-2	-.356,-1	.337,-1	-.230,-1	.155,-1	-.123,-1	-.429,-1	-.350,-1
40	-.396,-1	.511,-2	-.355,-1	.554,-2	-.211,-1	.281,-1	-.121,-1	-.367,-1	-.199,-1	.646,-1
41	.142,-1	-.259,-1	-.306,-1	.165,-1	.290,-1	-.367,-1	-.309,-1	.349,-2	.149,-1	-.571,-1
42	.109,-1	-.245,-1	-.351,-1	.106,-1	-.958,-2	.118,-1	-.161,-1	-.314,-1	.467,-2	.209,-1
43	.140,-2	.294,-1	.710,-1	-.554,-3	.245,-1	-.246,-2	-.124,-2	.278,-1	.110,-1	.118,-1
44	-.421,-1	.136,-1	.484,-1	.182,-1	-.318,-1	-.527,-1	.329,-1	-.369,-1	.273,-1	.223,-1
45	-.412,-1	-.205,-1	.522,-1	-.475,-1	.147,-1	.290,-1	-.123,-1	.417,-1	.817,-2	-.303,-2
46	.477,-1	-.382,-1	-.725,-2	.498,-2	-.259,-1	.347,-1	.142,-1	-.726,-2	-.192,-1	-.810,-3
47	-.317,-1	-.231,-1	-.126,-1	.260,-1	-.323,-1	-.483,-1	.290,-1	.380,-1	.308,-1	.332,-1
48	.157,-2	-.238,-1	-.274,-1	-.615,-1	-.876,-2	-.355,-1	.199,-1	.291,-1	-.516,-3	.109,-2
49	-.156,-1	-.567,-1	-.669,-1	.169,-1	-.143,-1	.279,-1	.180,-1	.329,-2	.579,-1	-.220,-1
50	-.103,-1	-.186,-1	.516,-1	.111,-3	-.344,-1	-.180,-1	-.370,-1	.140,-1	.779,-2	-.335,-1
51	.204,-1	-.878,-2	.445,-4	.262,-1	-.414,-1	.630,-2	.149,-1	.262,-1	.239,-1	.395,-1
52	.222,-1	.166,-1	.592,-2	-.443,-2	-.604,-1	.348,-1	.404,-1	-.134,-1	.432,-2	.137,-1
53	-.113,-1	.212,-1	.149,-1	-.341,-2	-.172,-1	.278,-1	.502,-1	-.208,-1	.297,-1	.266,-1
54	.224,-1	.101,-1	.423,-2	-.748,-2	.882,-2	-.214,-1	.427,-2	.505,-1	.406,-1	-.631,-2
55	-.336,-1	.262,-1	.640,-2	-.969,-2	-.299,-1	-.320,-1	-.601,-1	-.206,-1	.483,-1	-.149,-1
56	.474,-1	-.263,-1	.359,-1	.502,-1	-.107,-2	-.496,-1	-.205,-1	.625,-1	-.121,-1	.453,-1
57	.413,-2	-.412,-2	.983,-2	.895,-2	-.327,-1	-.282,-2	-.128,-1	.604,-1	.180,-1	-.991,-2
58	.209,-1	.273,-1	-.579,-2	-.869,-2	.412,-1	.683,-1	.120,-1	.281,-1	-.514,-1	.598,-2
59	-.167,-2	.433,-1	.360,-2	.310,-2	.488,-2	.346,-1	-.441,-1	.645,-2	.358,-2	.761,-2
60	.396,-1	-.529,-2	.247,-1	.303,-1	.391,-1	-.260,-1	-.549,-1	-.828,-2	.138,-1	.223,-1

Run No. 23 ; u component

Separation Distance (m.)

K	6	12	18	24	36	42	48	72	84	90
00	.417	.260	.229	.468,-1	.113	.124	.105	-.955,-2	.537,-1	.374,-1
01	.405	.252	.193	.409,-1	.109	.120	.512,-1	.273,-2	.447,-1	.304,-1
02	.424	.241	.181	.508,-1	.104	.123	.937,-1	.641,-2	.315,-1	.363,-1
03	.413	.265	.173	.611,-1	.107	.125	.109	.347,-1	.566,-1	.485,-1
04	.394	.282	.147	.526,-1	.124	.124	.957,-1	.640,-1	.587,-1	.485,-1
05	.388	.271	.152	.683,-1	.132	.115	.108	.907,-1	.662,-1	.405,-1
06	.370	.275	.168	.852,-1	.130	.951,-1	.107	.111	.598,-1	.409,-1
07	.343	.261	.167	.994,-1	.947,-1	.891,-1	.997,-1	.797,-1	.609,-1	.313,-1
08	.286	.261	.183	.104	.183	.938,-1	.868,-1	.509,-1	.715,-1	.393,-1
09	.271	.259	.175	.959,-1	.221	.110	.105	.558,-1	.381,-1	.473,-1
10	.257	.242	.171	.998,-1	.227	.120	.121	.526,-1	.775,-1	.611,-1
11	.248	.213	.168	.109	.214	.120	.129	.348,-1	.990,-1	.786,-1
12	.250	.210	.161	.109	.216	.125	.106	.575,-1	.142	.851,-1
13	.262	.195	.159	.956,-1	.187	.105	.946,-1	.759,-1	.151	.778,-1
14	.266	.205	.153	.958,-1	.177	.121	.853,-1	.868,-1	.135	.805,-1
15	.247	.205	.160	.877,-1	.171	.128	.609,-1	.965,-1	.121	.715,-1
16	.234	.167	.158	.765,-1	.179	.140	.372,-1	.935,-1	.109	.586,-1
17	.234	.161	.134	.706,-1	.177	.137	.259,-1	.119	.870,-1	.694,-1
18	.230	.159	.110	.682,-1	.161	.117	.158,-1	.153	.113	.913,-1
19	.216	.156	.986,-1	.485,-1	.176	.110	.851,-2	.157	.165	.896,-1
20	.216	.159	.921,-1	.463,-1	.167	.138	.000	.157	.198	.104
21	.209	.168	.691,-1	.349,-1	.136	.135	-.169,-1	.157	.194	.113
22	.182	.186	.531,-1	.482,-1	.108	.141	-.253,-1	.147	.188	.137
23	.171	.183	.415,-1	.397,-1	.863,-1	.132	-.337,-1	.145	.162	.129
24	.149	.199	.562,-1	.476,-1	.994,-1	.122	-.405,-1	.113	.155	.122
25	.139	.188	.747,-1	.531,-1	.115	.102	-.315,-1	.100	.161	.128
26	.140	.185	.611,-1	.396,-1	.121	.982,-1	-.214,-1	.921,-1	.171	.167
27	.150	.191	.610,-1	.187,-1	.124	.934,-1	-.104,-1	.768,-1	.167	.166
28	.144	.205	.571,-1	-.167,-2	.122	.784,-1	-.340,-1	.604,-1	.180	.157
29	.125	.184	.375,-1	-.133,-1	.120	.699,-1	-.378,-1	.516,-1	.162	.141
30	.110	.188	.325,-1	-.246,-1	.127	.736,-1	-.377,-1	.494,-1	.158	.137
31	.929,-1	.186	.671,-1	-.286,-1	.133	.729,-1	-.402,-1	.443,-1	.139	.142
32	.768,-1	.173	.750,-1	-.280,-1	.112	.874,-1	-.417,-1	.451,-1	.127	.140
33	.111	.174	.610,-1	-.260,-1	.910,-1	.112	-.215,-1	.654,-1	.110	.131
34	.114	.196	.731,-1	-.275,-2	.259	.121	.178,-2	.520,-1	.834,-1	.136
35	.111	.199	.884,-1	-.529,-2	.649,-1	.844,-1	.264,-1	.713,-1	.788,-1	.130
36	.797,-1	.177	.835,-1	-.222,-1	.619,-1	.733,-1	.405,-1	.599,-1	.135	.999,-1
37	.661,-1	.180	.831,-1	-.141,-1	.505,-1	.744,-1	.689,-1	.734,-1	.172	.878,-1
38	.631,-1	.164	.707,-1	-.289,-1	.585,-1	.669,-1	.754,-1	.708,-1	.199	.933,-1
39	.463,-1	.154	.585,-1	-.339,-1	.740,-1	.733,-1	.740,-1	.798,-1	.169	.104
40	.410,-1	.150	.739,-1	-.459,-1	.949,-1	.686,-1	.695,-1	.565,-1	.196	.123
41	.330,-1	.151	.699,-1	-.504,-1	.900,-1	.718,-1	.675,-1	.510,-1	.140	.135
42	.240,-1	.167	.503,-1	-.208,-1	.104	.700,-1	.779,-1	.449,-1	.144	.149
43	.158,-1	.158	.222,-1	-.380,-1	.954,-1	.674,-1	.804,-1	.553,-1	.160	.163
44	.334,-1	.136	.171,-1	-.280,-1	.875,-1	.697,-1	.721,-1	.851,-1	.178	.140
45	.517,-1	.135	.644,-3	-.800,-2	.931,-1	.768,-1	.821,-1	.106	.165	.128
46	.513,-1	.135	-.644,-2	.603,-3	.113	.718,-1	.661,-1	.129	.126	.116
47	.409,-1	.121	-.388,-2	.293,-2	.116	.756,-1	.700,-1	.132	.124	.100
48	.301,-1	.111	-.138,-1	-.624,-2	.121	.780,-1	.105	.131	.110	.108
49	.266,-1	.914,-1	-.446,-1	.415,-2	.130	.525,-1	.111	.115	.111	.118
50	.279,-1	.589,-1	-.647,-1	.130,-1	.108	.621,-1	.[illegible]	.104	.123	.125
51	.184,-1	.400,-1	-.520,-1	.803,-3	.107	.658,-1	.889,-1	.125	.130	.121
52	-.756,-2	.249,-1	-.445,-1	-.157,-1	.105	.764,-1	.824,-1	.138	.152	.102
53	-.158,-1	.214,-1	-.230,-1	-.191,-1	.850,-1	.858,-1	.605,-1	.129	.135	.898,-1
54	-.178,-1	.724,-2	-.252,-1	-.495,-2	.838,-1	.987,-1	.601,-1	.142	.136	.914,-1
55	.656,+1	.378,-1	-.294,-1	.246,-1	.105	.113	.560,-1	.159	.110	.899,-1
56	-.276,-1	.411,-1	-.360,-1	.329,-1	.127	.863,-1	.497,-1	.177	.122	.805,-1
57	-.335,-1	.501,-1	-.419,-1	.248,-1	.128	.699,-1	.552,-1	.170	.107	.108
58	-.389,-1	.481,-1	-.469,-1	.616,-2	.104	.709,-1	.425,-1	.157	.990,-1	.996,-1
59	-.674,-1	.270,-1	-.370,-1	.157,-1	.685,-1	.599,-1	.288,-1	.141	.111	.121
60	-.818,-1	.347,-1	-.213,-1	.165,-1	.445,-1	.469,-1	.346,-1	.122	.122	.867,-1

Run No. 23 ; v component

K	Separation Distance (m.)									
	6	12	18	24	36	42	48	72	84	90
00	.403	.242	.183	.177	.898,-1	.101	.665,-1	-.424,-1	.117,-1	.402,-1
01	.449	.263	.189	.164	.783,-1	.835,-1	.689,-1	-.224,-1	.303,-1	.347,-1
02	.291	.263	.191	.156	.123	.115	.560,-1	-.409,-2	.454,-2	.368,-1
03	.282	.287	.241	.171	.143	.125	.341,-1	-.113,-1	.210,-1	.232,-1
04	.245	.311	.266	.184	.926,-1	.114	.409,-1	.205,-1	.185,-1	.151,-1
05	.187	.214	.240	.146	.143	.667,-1	.497,-1	.172,-2	-.324,-1	-.140,-1
06	.138	.167	.215	.137	.154	.456,-1	.359,-1	.237,-1	.228,-1	-.104,-1
07	.116	.116	.172	.122	.169	.675,-1	.360,-1	.570,-1	.201,-1	-.110,-1
08	.138	.157	.172	.122	.144	.548,-1	.109	.778,-1	.244,-1	-.487,-1
09	.111	.133	.166	.118	.165	.106	.108	.631,-1	.287,-1	-.125,-1
10	.123	.127	.154	.132	.144	.110	.102	.588,-1	.146,-1	-.409,-1
11	.111	.127	.172	.845,-1	.118	.109	.562,-1	.470,-1	.221,-1	-.291,-1
12	.682,-1	.111	.118	.933,-1	.105	.751,-1	.622,-1	.450,-1	.549,-2	-.301,-1
13	.503,-1	.922,-1	.862,-1	.509,-1	.942,-1	.959,-1	-.500,-2	.549,-1	.207,-1	-.128,-1
14	.494,-1	.844,-1	.773,-1	.370,-1	.812,-1	.803,-1	.173,-1	.378,-1	.574,-1	-.114,-1
15	.595,-2	.955,-1	.251,-1	-.104,-1	.835,-1	.817,-1	.418,-1	.410,-1	.297,-1	.942,-2
16	.894,-2	.860,-1	.183,-1	.122,-1	.787,-1	.835,-1	.537,-1	.516,-1	.520,-1	.579,-2
17	.418,-1	.814,-1	.168,-1	.369,-1	.534,-1	.520,-1	.254,-1	.760,-1	.105	.228,-1
18	.331,-1	.183,-1	.327,-1	.707,-1	.596,-1	.592,-1	.506,-1	.607,-1	.128	.546,-1
19	.487,-1	.866,-1	.136,-2	.669,-1	.461,-1	.797,-1	.437,-1	.310,-1	.939,-1	.762,-1
20	.354,-1	.421,-1	.942,-2	.887,-1	.913,-1	.692,-1	.445,-1	.790,-1	.486,-1	.793,-1
21	.892,-1	.252,-1	.201,-1	.108	.848,-1	.653,-1	.490,-1	.696,-1	.747,-1	.302,-1
22	.597,-2	.700,-1	.241,-1	.961,-1	.878,-1	.773,-1	-.376,-3	.943,-1	.266,-1	.228,-1
23	.467,-2	.957,-1	.760,-1	.741,-1	.120	.886,-1	.311,-1	.532,-1	.471,-1	.376,-1
24	-.989,-3	.650,-1	.515,-1	.659,-1	.788,-1	.812,-1	.614,-1	.471,-1	.260,-1	.353,-1
25	.228,-1	.605,-1	.615,-1	.291,-1	.538,-1	.396,-1	.701,-1	-.151,-2	.458,-1	.135,-1
26	.230,-1	.355,-1	.381,-1	-.247,-2	.644,-1	.389,-1	.640,-1	.297,-1	.619,-1	.332,-1
27	.407,-1	.398,-1	.752,-1	.351,-1	.320,-1	.231,-1	.105	.982,-2	.309,-1	.446,-1
28	.258,-1	.553,-1	.299,-1	-.608,-2	.114,-1	.272,-1	.763,-1	.361,-1	.350,-1	.504,-1
29	.102,-1	.316,-1	.265,-1	.532,-2	.279,-1	.669,-1	.111	.861,-2	.244,-1	.517,-1
30	.293,-1	.418,-2	.414,-2	.387,-1	.612,-1	.262,-1	.889,-1	.347,-1	.233,-1	.596,-1
31	.278,-1	.640,-1	.140,-1	.460,-1	.726,-1	.784,-1	.657,-1	.194,-1	.170,-1	.667,-1
32	.595,-1	.405,-1	.416,-1	.617,-1	.525,-1	.722,-1	.800,-1	.397,-1	.404,-1	.584,-1
33	.668,-1	.273,-1	.561,-1	.800,-1	.579,-1	.527,-1	.481,-1	.661,-1	.212,-2	.738,-1
34	.385,-1	.416,-1	.462,-1	.391,-1	.535,-1	.427,-1	.224,-1	.254,-1	.205,-1	.488,-1
35	.485,-1	.986,-1	.861,-1	.756,-1	.774,-1	.517,-1	.233,-1	.641,-1	.315,-1	.229,-1
36	.174,-1	.633,-1	.108	.606,-1	.656,-1	.509,-1	.603,-2	.663,-1	.417,-1	.205,-1
37	.167,-1	.358,-1	.662,-1	.593,-1	.781,-1	.828,-1	.187,-1	.143,-1	.513,-1	.102,-1
38	-.187,-3	.412,-1	.330,-1	.363,-1	.783,-1	.775,-1	.305,-1	.551,-2	.202,-1	.253,-1
39	.141,-1	.593,-1	.780,-1	.639,-1	.429,-1	.770,-1	.287,-1	.969,-2	.989,-1	.420,-1
40	-.116,-1	.351,-1	.618,-2	.744,-1	.549,-1	.376,-1	.882,-2	.529,-1	.469,-1	.411,-1
41	-.177,-1	.458,-1	.847,-2	.658,-1	.221,-1	.620,-1	.425,-2	.829,-1	.174,-1	.325,-1
42	.261,-2	.973,-1	.462,-1	.677,-1	.142,-1	.396,-1	.947,-2	.901,-1	.127,-1	-.384,-2
43	.131,-1	.425,-1	.313,-1	.546,-1	.354,-1	.585,-1	.359,-2	.936,-1	.344,-1	.173,-1
44	.340,-1	.453,-1	.349,-1	.662,-1	-.662,-2	.934,-1	-.139,-1	.562,-1	.112,-1	.695,-1
45	.306,-1	.819,-1	.181,-1	.802,-1	.250,-1	.535,-1	-.147,-2	.115	.310,-1	.897,-1
46	.129,-1	.634,-1	.288,-1	.722,-1	.184,-2	.410,-1	.111,-1	.852,-1	.812,-1	.141,-1
47	.253,-1	.215,-1	.478,-1	.404,-1	.245,-1	.360,-1	.121,-1	.790,-1	.820,-1	.457,-1
48	.523,-1	.405,-1	.538,-1	.791,-1	.513,-1	.478,-1	.194,-1	.518,-1	.124,-1	-.110,-1
49	.263,-1	.821,-1	.705,-1	.842,-1	.402,-1	.226,-1	.139,-1	.353,-1	.263,-1	.305,-1
50	.698,-1	.984,-1	.105	.479,-1	.366,-1	.405,-1	.301,-1	.559,-1	.235,-1	.239,-1
51	.623,-1	.960,-1	.124	.387,-1	.259,-1	.545,-1	.490,-3	.200,-1	-.477,-1	.598,-1
52	.385,-1	.935,-1	.134	.222,-1	.462,-1	.200,-1	.376,-1	.405,-1	.448,-1	.276,-2
53	.395,-1	.906,-1	.135	.463,-1	.256,-1	.479,-1	-.261,-2	-.187,-1	-.115,-1	-.214,-1
54	-.149,-2	.109	.128	.460,-1	.326,-1	.585,-1	.310,-2	-.112,-1	-.293,-2	-.767,-2
55	.452,-1	.130	.130	.562,-1	.253,-1	.604,-1	.572,-1	-.797,-2	-.156,-1	-.354,-1
56	.385,-1	.105	.773,-1	.471,-1	.387,-1	.100	.550,-1	.169,-1	.521,-2	-.108,-1
57	.896,-2	.560,-1	.819,-1	.532,-1	.515,-1	.702,-1	.289,-1	.114,-1	-.292,-1	-.270,-1
58	.599,-1	.440,-1	.488,-1	.569,-1	.556,-1	.366,-1	.204,-1	.155,-1	-.269,-1	-.471,-1
59	.555,-1	.394,-1	.340,-1	.156,-1	.753,-1	.666,-1	-.245,-1	.312,-1	-.184,-1	-.449,-1
60	.649,-1	.432,-1	.446,-1	.237,-1	.419,-1	.462,-1	-.334,-1	.234,-1	-.473,-2	-.523,-1

Run No. 24 ; u component

K	Separation Distance (n.)									
	0	12	18	24	36	42	48	72	84	90
00	.329	.183	.289,-1	.127	.556,-1	.446,-1	.591,-1	.286,-2	-.944,-1	-.917,-1
01	.350	.194	.727,-1	.123	.515,-1	.377,-1	.697,-1	.339,-1	-.101	-.103
02	.339	.192	.358,-1	.121	.746,-1	.607,-1	.480,-1	.403,-1	-.102	-.647,-1
03	.313	.167	.141	.137	.860,-1	.597,-1	.319,-1	.476,-1	-.801,-1	-.153,-1
04	.298	.172	.131	.132	.531,-1	.507,-1	.405,-1	.418,-1	-.467,-1	-.235,-1
05	.285	.150	.852,-1	.131	.111	.440,-1	.617,-1	.383,-1	-.365,-1	-.840,-2
06	.225	.123	.645,-1	.132	.123	.333,-1	.727,-1	.296,-1	-.210,-1	-.100,-1
07	.209	.126	.572,-1	.137	.126	.351,-1	.841,-1	.204,-1	.352,-2	.313,-2
08	.196	.124	.524,-1	.145	.114	.445,-1	.923,-1	.146,-1	.411,-2	-.351,-2
09	.167	.124	.450,-1	.153	.109	.494,-1	.123	.225,-1	-.565,-2	.122,-2
10	.143	.120	.326,-1	.153	.102	.584,-1	.133	.198,-1	.792,-2	-.229,-3
11	.108	.116	.234,-1	.153	.103	.721,-1	.138	-.299,-2	.371,-2	.146,-1
12	.592,-1	.881,-1	.113,-1	.141	.110	.730,-1	.141	-.953,-2	-.191,-1	.186,-1
13	.283,-1	.702,-1	-.242,-2	.155	.101	.683,-1	.145	.733,-2	-.238,-1	.400,-1
14	.693,-3	.466,-1	.866,-4	.163	.727,-1	.613,-1	.150	.967,-2	-.297,-1	.454,-1
15	-.222,-1	.283,-1	.185,-1	.162	.548,-1	.531,-1	.134	.333,-1	-.500,-1	.416,-1
16	-.278,-1	.337,-1	.448,-1	.165	.612,-1	.586,-1	.134	.460,-1	-.237,-1	.541,-1
17	-.838,-2	.397,-1	.594,-1	.167	.664,-1	.525,-1	.135	.393,-1	.286,-1	.108
18	-.339,-1	.279,-1	.761,-1	.168	.864,-1	.218,-1	.132	.297,-1	.593,-1	.118
19	-.674,-1	-.934,-2	.680,-1	.145	.105	-.163,-2	.128	.185,-1	.599,-1	.122
20	-.867,-1	-.150,-1	.717,-1	.158	.108	.188,-3	.145	.109,-1	.723,-1	.152
21	-.741,-1	-.825,-2	.627,-1	.147	.115	.213,-1	.148	.208,-1	.697,-1	.147
22	-.740,-1	.390,-2	.620,-1	.139	.126	.596,-2	.138	.227,-1	.686,-1	.143
23	-.543,-1	.120,-1	.472,-1	.144	.126	.520,-2	.105	.386,-1	.574,-1	.119
24	-.558,-1	-.236,-2	.280,-1	.145	.118	.149,-1	.824,-1	.426,-1	.534,-1	.108
25	-.314,-1	-.880,-2	.374,-1	.149	.112	.256,-1	.775,-1	.316,-1	.923,-1	.102
26	-.411,-1	.308,-2	.104,-1	.138	.772,-1	.418,-1	.844,-1	.344,-1	.102	.116
27	-.668,-1	.210,-2	-.161,-1	.109	.579,-1	.487,-1	.840,-1	.445,-1	.117	.110
28	-.626,-1	-.448,-2	-.217,-1	.860,-1	.554,-1	.803,-1	.876,-1	.441,-1	.136	.950,-1
29	-.527,-1	.408,-3	-.222,-1	.667,-1	.478,-1	.826,-1	.526,-1	.417,-1	.131	.979,-1
30	-.406,-1	-.160,-1	-.268,-2	.476,-1	.639,-1	.792,-1	.180,-1	.459,-1	.139	.860,-1
31	-.598,-1	-.201,-1	-.606,-2	.344,-1	.508,-1	.767,-1	-.307,-2	.430,-1	.152	.993,-1
32	-.710,-1	-.159,-1	-.701,-2	.122,-1	.306,-1	.581,-1	-.811,-3	.455,-1	.160	.826,-1
33	-.665,-1	-.149,-1	-.260,-3	-.194,-1	.921,-2	.495,-1	-.933,-2	.192,-1	.144	.862,-1
34	-.561,-1	-.562,-2	.335,-1	-.523,-1	.109,-1	.529,-1	.214,-2	.323,-1	.122	.565,-1
35	-.484,-1	.127,-2	.607,-1	-.566,-1	-.611,-2	.494,-1	.160,-1	.484,-1	.789,-1	.351,-1
36	-.382,-1	.854,-2	.725,-1	-.492,-1	-.155,-1	.404,-1	.533,-2	.583,-1	.487,-1	.172,-1
37	-.372,-1	.201,-1	.732,-1	-.503,-1	-.959,-2	.175,-1	.377,-2	.747,-1	.431,-1	.626,-2
38	-.229,-1	.308,-1	.829,-1	-.702,-1	-.242,-1	.107,-2	-.319,-2	.756,-1	.459,-1	-.159,-1
39	-.123,-1	.571,-1	.102	-.918,-1	-.443,-1	-.273,-1	-.684,-2	.714,-1	.556,-1	-.218,-1
40	.139,-1	.609,-1	.111	-.111	-.453,-1	-.371,-1	.156,-2	.475,-1	.489,-1	-.519,-1
41	.232,-1	.431,-1	.752,-1	-.122	-.518,-1	-.283,-1	.140,-1	.262,-1	.351,-1	-.552,-1
42	.339,-1	.455,-1	.742,-1	-.139	-.484,-1	-.270,-2	.156,-1	.280,-1	.154,-1	-.490,-1
43	.563,-1	.258,-1	.567,-1	-.149	-.312,-1	-.115,-2	.174,-1	.160,-1	.214,-1	-.571,-1
44	.110	.735,-2	.648,-1	-.154	-.269,-1	.282,-2	.134,-1	.241,-1	.272,-2	-.439,-1
45	.110	-.239,-1	.766,-1	-.144	-.373,-1	.163,-1	.140,-1	.515,-1	-.176,-2	-.407,-1
46	.102	-.118,-2	.746,-1	-.132	-.437,-1	.185,-1	.377,-2	.528,-1	-.238,-1	-.363,-1
47	.104	.169,-1	.711,-1	-.120	-.315,-1	.172,-1	-.690,-2	.510,-1	-.249,-1	-.328,-2
48	.998,-1	.172,-1	.687,-1	-.110	-.404,-1	.971,-2	-.153,-1	.510,-1	-.432,-1	.625,-2
49	.890,-1	.120,-1	.704,-1	-.930,-1	-.458,-1	.100,-1	-.568,-2	.266,-1	-.624,-1	-.659,-2
50	.973,-1	.105,-1	.439,-1	-.100	-.598,-1	.283,-1	-.142,-1	.752,-2	-.236,-1	-.790,-2
51	.847,-1	-.377,-2	.471,-1	-.880,-1	-.672,-1	.367,-1	-.233,-1	-.144,-1	-.130,-1	-.378,-2
52	.639,-1	-.179,-1	.463,-1	-.780,-1	-.633,-1	.275,-1	-.297,-1	-.213,-1	-.293,-1	-.481,-2
53	.637,-1	-.381,-1	.313,-1	-.971,-1	-.484,-1	.771,-2	-.191,-1	-.637,-2	-.360,-1	.597,-2
54	.690,-1	-.546,-1	.511,-2	-.114	-.426,-1	-.270,-2	-.997,-2	-.281,-1	-.392,-1	.218,-1
55	.615,-1	-.521,-1	-.117,-1	-.106	-.500,-1	-.731,-2	.591,-2	-.392,-1	-.424,-1	.319,-1
56	.513,-1	-.537,-1	-.140,-1	-.102	-.369,-1	-.917,-2	-.505,-2	-.475,-1	-.167,-1	.306,-1
57	.460,-1	-.594,-1	-.224,-1	-.103	-.316,-1	-.331,-2	-.124,-1	-.493,-1	-.190,-2	.485,-1
58	.453,-1	-.348,-1	-.970,-2	-.114	-.396,-1	-.316,-2	-.355,-1	-.270,-1	-.162,-1	.657,-2
59	.346,-1	-.348,-1	.147,-2	-.126	-.275,-1	-.226,-1	-.688,-1	.696,-2	-.451,-1	-.161,-1
60	.297,-1	-.476,-1	-.251,-2	-.136	-.432,-1	-.314,-1	-.646,-1	.357,-1	-.467,-1	-.[illegible]

Run No. 24 ; v component

K	Separation Distance (m.)									
	6	12	18	24	36	42	48	72	84	90
00	.413	.289	.176	.141	.751,-1	.969,-1	.773,-2	.491,-1	.675,-1	.397,-1
01	.305	.238	.206	.181	.105	.942,-1	.274,-1	.408,-1	.630,-1	.587,-1
02	.225	.191	.161	.197	.118	.975,-1	.621,-1	.427,-1	.723,-1	.598,-1
03	.178	.217	.154	.136	.825,-1	.839,-1	.872,-1	.333,-1	.534,-1	.853,-1
04	.147	.170	.137	.156	.585,-1	.826,-1	.406,-1	.210,-1	.274,-1	.762,-1
05	.131	.168	.158	.139	.677,-1	.780,-1	.968,-1	.565,-1	.436,-1	.392,-1
06	.149	.150	.977,-1	.145	.921,-1	.748,-1	.875,-1	.558,-1	.613,-1	.585,-1
07	.120	.127	.923,-1	.152	.813,-1	.218,-1	.907,-1	.470,-1	.226,-1	.102
08	.118	.118	.958,-1	.131	.480,-1	.636,-1	.117	.676,-1	.537,-1	.521,-1
09	.912,-1	.125	.106	.666,-1	.189,-1	.502,-1	.147	.959,-1	.361,-1	.478,-1
10	.635,-1	.908,-1	.948,-1	.484,-1	-.225,-1	.568,-1	.111	.590,-1	.291,-1	.232,-1
11	.895,-1	.787,-1	.970,-1	.254,-1	.246,-1	.607,-1	.819,-1	.383,-1	.226,-1	-.425,-2
12	.671,-1	.321,-1	.501,-1	-.102,-2	.496,-1	.314,-1	.113	.360,-1	-.245,-1	-.560,-2
13	.869,-1	.405,-1	.460,-1	-.184,-1	.362,-1	.660,-1	.853,-1	.407,-1	.348,-2	-.358,-1
14	.613,-1	.258,-1	.359,-1	.116,-2	.134,-1	.302,-1	.451,-1	.444,-1	.129,-1	.157 -1
15	.294,-1	.431,-1	.364,-1	-.223,-1	-.179,-1	.587,-1	.366,-1	.411,-1	-.570,-2	.166,-1
16	.282,-1	.781,-2	.448,-1	.488,-2	-.201,-1	.388,-1	.202,-1	.216,-1	.157,-1	.106,-1
17	.473,-1	.276,-1	.740,-1	.857,-2	.108,-1	.553,-1	.487,-1	.174,-1	-.212,-1	-.225,-1
18	.129,-1	.476,-1	.628,-1	.981,-2	.170,-1	.522,-1	.658,-1	.233,-2	-.158,-1	.321,-1
19	.484,-1	.452,-1	.292,-1	.906,-2	.505,-1	.537,-1	.410,-1	.936,-2	.679,-2	.581 -1
20	.101	.341,-1	-.105,-1	-.589,-2	.246,-1	.229,-1	.517,-1	-.126,-1	.221,-1	.114
21	.510,-1	-.143,-1	-.279,-1	-.182,-2	.373,-3	.332,-1	.449,-2	-.116,-1	.676,-1	.106
22	.293,-1	-.332,-1	-.130,-1	-.182,-1	.218,-1	.421,-1	.124,-1	.196,-1	.694,-1	.798,-1
23	.478,-1	-.537,-1	-.186,-1	-.320,-1	.267,-1	.191,-2	-.342,-1	.300,-1	.357,-1	.354,-1
24	.326,-1	-.496,-1	.179,-1	-.620,-1	.359,-1	.443,-1	-.654,-2	.188,-1	-.243,-1	-.182,-1
25	.322,-1	-.824,-2	.610,-1	-.202,-1	.463,-1	.299,-1	-.458,-1	.391,-2	-.457,-1	-.265,-1
26	.239,-1	-.752,-2	.405,-1	-.820,-1	.400,-1	.696,-1	-.568,-1	-.582 -1	-.334,-1	.266,-2
27	.310,-1	.602,-1	.166,-1	-.430,-1	.348,-1	.432,-1	-.500,-1	-.482,-1	-.299,-1	.491,-1
28	.310,-1	.185,-1	.451,-1	-.187,-1	.443,-1	.189,-1	-.315,-1	-.373,-1	-.234,-1	.378,-1
29	.348,-1	-.306,-1	.430,-1	-.521,-1	.192,-1	.223,-1	-.883,-2	-.483,-1	-.293,-1	-.221,-1
30	.418,-1	-.155,-1	.115,-1	-.438,-1	-.147,-2	.424,-1	-.868,-2	-.491,-1	-.361,-1	-.221,-1
31	.490,-2	.245,-1	.384,-1	-.570,-1	.132,-1	.453,-1	-.438,-1	-.523,-1	-.104,-1	.111,-1
32	.236,-1	.105,-1	.290,-1	-.517,-1	.553,-1	.589,-1	-.363,-1	-.628,-1	-.129,-1	-.545,-2
33	-.123,-1	.683,-2	.302,-1	-.339,-1	.518,-1	.852,-1	-.187,-2	-.662,-1	-.114,-1	-.186,-1
34	-.108,-1	.477,-2	.453,-1	-.306,-1	.429,-1	.483,-1	-.152,-1	-.418,-1	.306,-1	-.196,-2
35	.109,-1	.517,-1	.491,-1	-.367,-3	.390,-1	.221,-1	-.227,-1	-.334,-1	-.190,-1	-.382,-1
36	.142,-1	.179,-1	.514,-1	.143,-1	.593,-1	.428,-1	-.412,-1	-.566,-1	-.870,-2	-.216,-1
37	.288,-1	.354,-1	.435,-1	.332,-1	.496,-1	.741,-1	-.360,-1	-.578,-1	-.767,-3	-.584,-1
38	.327,-1	.315,-1	.565,-1	.655,-1	.441,-1	.468,-1	-.540,-2	-.736,-1	-.210,-1	-.548,-1
39	.620,-1	.478,-1	.337,-1	.728,-1	.679,-1	.511,-1	-.737,-1	-.104	.900,-2	-.940,-2
40	.433,-1	-.150,-2	.252,-1	.616,-1	.460,-1	.832,-1	-.694,-1	-.889,-1	-.254,-2	.207,-1
41	.499,-1	.232,-1	.126,-2	.502,-1	.664,-1	.841,-1	-.686,-1	-.701,-1	.121,-1	.340,-2
42	.385,-1	.152,-1	.374,-1	.375,-1	.701,-1	.581,-1	-.863,-1	-.879,-1	-.192,-1	.217,-1
43	-.143,-1	.493,-1	-.641,-2	.624,-1	.865,-1	.689,-1	-.673,-1	-.983,-1	-.900,-2	.113,-1
44	-.320,-1	.876,-2	-.767,-2	.738,-1	.107	.513,-1	-.777,-1	-.671,-1	-.162,-1	.137,-1
45	-.566,-1	.338,-2	-.643,-2	.598,-1	.990,-1	.546,-1	-.747,-1	-.253,-1	-.303,-1	-.144,-1
46	-.753,-1	-.392,-1	-.507,-1	.981,-1	.835,-1	.687,-1	-.552,-1	-.201,-1	-.722,-2	.122,-1
47	-.368,-1	-.116,-1	.967,-3	.100	.693,-1	.461,-1	-.339,-1	-.274,-1	-.156,-1	.125,-1
48	-.242,-1	-.188,-1	.526,-2	.527,-1	.637,-1	.604,-1	.106,-1	-.372,-1	-.528,-1	-.153,-2
49	-.318,-1	-.133,-1	-.160,-1	.153,-2	.452,-1	.355,-1	-.699,-2	-.455,-1	-.543,-2	.480,-2
50	-.457,-1	-.224,-1	-.385,-1	-.109,-1	.477,-1	.644,-1	-.430,-1	-.523,-1	.116,-1	.110,-1
51	-.472,-1	-.439,-1	-.305,-1	.379,-1	.169,-1	.474,-1	.741,-2	-.422,-2	.304,-1	.266,-1
52	-.369,-1	.150,-1	-.660,-2	.319,-1	.705,-2	.182,-1	-.150,-1	-.236,-1	.100,-1	.187,-1
53	-.544,-1	.134,-1	-.264,-1	.250,-1	-.559,-4	.242,-1	-.208,-1	-.288,-2	.355,-2	.345,-2
54	-.549,-1	-.447,-2	-.687,-1	.775,-2	.252,-1	.371,-1	-.656,-2	-.106,-1	-.315,-1	-.219,-1
55	-.328,-1	-.538,-2	-.740,-1	.271,-1	.874,-1	.324,-1	-.481,-1	-.384,-1	-.306,-1	-.320,-1
56	-.793,-1	-.354,-1	-.549,-1	-.408,-2	.776,-1	.435,-1	-.623,-1	-.503,-2	-.212,-1	-.491,-1
57	-.949,-1	-.412,-1	-.584,-1	.139,-1	.526,-1	.624,-2	-.525,-1	-.215,-1	-.184,-1	-.241,-1
58	-.759,-1	-.742,-1	-.506,-1	.281,-1	.520,-1	-.188,-1	-.298,-1	-.147,-1	-.330,-1	-.355,-1
59	-.102	-.696,-1	-.506,-1	.234,-1	.800,-1	-.216,-1	.138,-1	-.115,-1	-.232,-1	-.456,-1
60	-.839,-1	-.771,-1	-.333,-1	.385,-1	.583,-1	-.516,-1	.107,-1	-.983,-2	-.350,-1	.383,-1

Run No. 27 ; u component

	Separation Distance (m.)									
K	6	12	18	24	36	42	48	72	84	90
00	.555	.410	.398							
01	.574	.421	.405							
02	.574	.436	.400							
03	.561	.423	.399							
04	.542	.413	.422							
05	.516	.422	.417							
06	.488	.419	.401							
07	.468	.412	.400							
08	.452	.375	.391							
09	.439	.370	.385							
10	.415	.353	.379							
11	.399	.342	.359							
12	.382	.316	.344							
13	.372	.300	.332							
14	.372	.297	.311							
15	.373	.267	.294							
16	.355	.252	.285							
17	.340	.260	.274							
18	.326	.262	.273							
19	.316	.249	.268							
20	.306	.239	.268							
21	.292	.241	.256							
22	.304	.237	.251							
23	.307	.233	.243							
24	.302	.238	.240							
25	.314	.235	.230							
26	.323	.214	.233							
27	.307	.186	.217							
28	.305	.162	.215							
29	.294	.142	.198							
30	.283	.130	.183							
31	.261	.134	.164							
32	.248	.125	.169							
33	.223	.113	.162							
34	.209	.111	.141							
35	.190	.107	.133							
36	.174	.107	.124							
37	.171	.111	.125							
38	.170	.113	.124							
39	.176	.110	.125							
40	.177	.114	.117							
41	.187	.948,-1	.129							
42	.180	.758,-1	.124							
43	.181	.707,-1	.118							
44	.165	.721,-1	.110							
45	.173	.896,-1	.114							
46	.171	.840,-1	.120							
47	.159	.816,-1	.107							
48	.153	.684,-1	.105							
49	.158	.787,-1	.955,-1							
50	.162	.109	.112							
51	.156	.882,-1	.127							
52	.141	.781,-1	.142							
53	.136	.880,-1	.154							
54	.126	.104	.167							
55	.121	.103	.152							
56	.119	.102	.135							
57	.113	.104	.125							
58	.107	.106	.113							
59	.991,-1	.926,-1	.983,-1							
60	.101	.792,-1	.101							

Run No. 27 ; v component

	Separation Distance (m.)									
K	6	12	18	24	36	42	48	72	84	90
00	.691	.630	.539							
01	.651	.634	.554							
02	.596	.638	.550							
03	.557	.628	.550							
04	.514	.616	.533							
05	.496	.607	.517							
06	.451	.592	.497							
07	.416	.574	.473							
08	.395	.547	.446							
09	.375	.516	.425							
10	.336	.490	.388							
11	.309	.457	.361							
12	.291	.396	.437							
13	.280	.369	.318							
14	.263	.347	.314							
15	.272	.337	.307							
16	.248	.329	.284							
17	.217	.324	.270							
18	.219	.312	.253							
19	.204	.295	.251							
20	.192	.279	.230							
21	.205	.275	.207							
22	.190	.264	.186							
23	.196	.250	.187							
24	.180	.236	.174							
25	.164	.227	.179							
26	.176	.220	.184							
27	.180	.206	.183							
28	.179	.208	.176							
29	.182	.199	.136							
30	.173	.180	.185							
31	.155	.169	.158							
32	.140	.181	.151							
33	.110	.170	.136							
34	.110	.151	.138							
35	.965,-1	.146	.102							
36	.100	.128	.101							
37	.108	.115	.881,-1							
38	.113	.104	.694,-1							
39	.116	.105	.735,-1							
40	.113	.875,-1	.742,-1							
41	.123	.919,-1	.749,-1							
42	.115	.768,-1	.557,-1							
43	.102	.724,-1	.581,-1							
44	.993,-1	.769,-1	.517,-1							
45	.941,-1	.796,-1	.449,-1							
46	.918,-1	.804,-1	.567,-1							
47	.789,-1	.701,-1	.522,-1							
48	.956,-1	.475,-1	.370,-1							
49	.665,-1	.599,-1	.287,-1							
50	.809,-1	.533,-1	.210,-1							
51	.847,-1	.512,-1	.190,-1							
52	.820,-1	.405,-1	.155,-1							
53	.582,-1	.345,-1	.193,-1							
54	.591,-1	.392,-1	.314,-1							
55	.564,-1	.295,-1	.264,-1							
56	.615,-1	.351,-1	.383,-1							
57	.759,-1	.207,-1	.381,-1							
58	.705,-1	.142,-1	.385,-1							
59	.532,-1	.215,-1	.450,-1							
60	.481,-1	.231,-1	.381,-1							

Run No. 32 ; u component

K	Separation Distance (m.) 6	12	18	24	36	42	48	72	84	90
00	.858	.851	.868	.847	.830	.830	.832	.846	.830	.852
01	.848	.861	.863	.850	.825	.835	.839	.843	.838	.855
02	.841	.858	.855	.849	.822	.831	.841	.839	.841	.849
03	.840	.852	.850	.847	.830	.835	.835	.829	.847	.842
04	.842	.852	.055	.846	.828	.837	.831	.838	.842	.832
05	.839	.847	.857	.848	.826	.835	.829	.848	.835	.823
06	.837	.849	.859	.852	.824	.837	.823	.849	.835	.825
07	.837	.849	.853	.857	.825	.843	.822	.846	.831	.829
08	.840	.844	.852	.854	.832	.844	.825	.844	.822	.930
09	.841	.846	.854	.848	.831	.838	.822	.836	.824	.834
10	.842	.845	.854	.845	.833	.835	.822	.835	.825	.837
11	.842	.844	.858	.840	.837	.832	.822	.837	.827	.842
12	.841	.843	.855	.828	.831	.834	.817	.838	.826	.839
13	.835	.846	.857	.825	.820	.829	.818	.838	.826	.838
14	.833	.846	.851	.830	.822	.824	.820	.837	.834	.838
15	.831	.846	.836	.832	.823	.829	.826	.832	.834	.830
16	.838	.845	.820	.830	816	.828	.823	.831	.830	.826
17	.840	.834	.827	.834	.817	.828	.822	.829	.826	.822
18	.839	.825	.837	.837	.814	.829	.820	.825	.827	.827
19	.833	.814	.845	.835	.815	.833	.822	.823	.824	.835
20	.827	.821	.844	.832	.818	.831	.817	.827	.817	.828
21	.831	.820	.843	.824	.823	.819	.809	.830	.819	.878
22	.836	.830	.836	.821	.824	.815	.801	.831	.822	.828
23	.839	.823	.836	.822	.820	.811	.805	.832	.823	.831
24	.837	.822	.833	.817	.816	.808	.808	.827	.827	.829
25	.830	.826	.835	.814	.814	.807	.814	.827	.824	.814
26	.827	.832	.835	.816	.808	.808	.810	.831	.824	.807
27	.828	.829	.840	.813	.801	.811	.820	.830	.818	.813
28	.832	.825	.838	.811	.797	.812	.822	.830	.808	.819
29	.825	.826	.828	.807	.796	.807	.818	.835	.809	.819
30	.825	.829	.827	.806	.805	.806	.808	.825	.806	.814
31	.826	.829	.823	.804	.809	.809	.804	.824	.811	.810
32	.831	.825	.814	.806	.805	.813	.797	.819	.807	.814
33	.836	.815	.817	.808	.806	.814	.796	.816	.800	.817
34	.830	.806	.817	.808	.810	.812	.793	.816	.795	818
35	.826	.808	.817	.809	.814	.804	.794	.821	.801	.819
36	.818	.808	.822	.805	.815	.800	.796	.821	.808	.817
37	.815	.806	.831	.805	.806	.802	.801	.821	.808	.811
38	.815	.805	.832	.807	.796	.808	.805	.820	.807	.806
39	.811	.810	.825	.809	.787	.806	.805	.817	.806	.804
40	.809	.814	.823	.808	.788	.806	.807	.813	.802	.802
41	.809	.812	.821	.807	.786	.807	.808	.817	.797	.805
42	.823	.805	.813	.806	.790	.808	.801	.819	.799	.805
43	.835	.801	.813	.805	.792	.809	.792	.817	.801	.800
44	.834	.800	.812	.807	.793	.804	.786	.810	.801	.793
45	.823	.797	.814	.807	.795	.801	.779	.806	.798	.788
46	.818	.798	.809	.811	.795	.807	.779	.806	.789	.793
47	.822	.799	.809	.820	.793	.800	.784	.804	.785	.800
48	.824	.801	.807	.817	.796	.793	.785	.799	.785	.804
49	.822	.795	.806	.805	.799	.791	.779	.796	.787	.797
50	.821	.790	.808	.798	.800	.791	.776	.789	.792	.796
51	.807	.787	.808	.796	.797	.787	.773	.790	.788	.795
52	.809	.789	.804	.796	.786	.795	.770	.793	.791	.794
53	.805	.792	.797	.799	.778	.800	.772	.793	.790	.791
54	.802	.794	.795	.798	.782	.801	.776	.795	.783	.783
55	.798	.788	.793	.795	.790	.798	.776	.796	.782	.782
56	.790	.785	.788	.799	.790	.800	.780	.789	.770	.783
57	.795	.779	.787	.791	.790	.796	.774	.785	.771	.785
58	.794	.773	.788	.784	.788	.801	.773	.784	.775	.782
59	.787	.772	.786	.782	.784	.793	.779	.780	.775	.783
60	.781	.775	.787	.778	.790	.788	.778	.780	.775	.780



Run No. 32 ; v component

K	Separation Distance (n.)									
	6	12	18	24	36	42	48	72	84	90
00	.902,-1	.153	.128	.129	.716,-1	.124	.104	.426,-1	.738,-1	.935,-1
01	.599,-1	.156	.123	.121	.192	.161	.126	.109	.526,-1	.123
02	.939,-1	.178	.124	.142	.139	.996,-1	.862,-1	.927,-1	.286,-1	.132
03	.669,-1	.155	.120	.960,-1	.117	.148	.580,-1	.128	.379,-1	.144
04	.552,-1	.151	.112	.105	.129	.159	.795,-1	.872,-1	.454,-1	.409,-1
05	.706,-1	.168	.937,-1	.141	.159	.964,-1	.207,-1	.120	.639,-1	.350,-1
06	.418,-1	.118	.116	.129	.141	.104	.871,-1	.109	.209,-1	.772,-1
07	.127,-1	.112	.152	.131	.911,-1	.805,-1	.553,-1	.533,-1	.396,-1	.209,-1
08	.153,-1	.109	.565,-1	.176	.781,-1	.687,-1	.393,-1	.717,-1	.492,-1	.398,-1
09	.485,-1	.101	.548,-1	.995,-1	.854,-1	.101	.297,-1	.579,-1	.136,-1	.764,-1
10	.458,-1	.101	.134	.660,-1	.108	.632,-1	.416,-1	.550,-1	.290,-1	.565,-1
11	.205,-1	.973,-1	.927,-1	.973,-1	.662,-1	.753,-1	.423,-1	.291,-1	.226,-2	.670,-1
12	-.237,-1	.131	.646,-1	.121	.835,-1	.564,-1	.799,-1	.115	.824,-2	.432,-1
13	.248,-1	.111	.934,-1	.126	.992,-1	.472,-1	.316,-1	.242,-1	.603,-1	.393,-1
14	.248,-1	.103	.399,-1	.754,-1	.963,-1	.626,-1	.218,-1	.115,-1	-.185,-1	.426,-1
15	.569,-1	.819,-1	.414,-1	.108	.511,-1	.614,-1	.452,-1	.383,-1	.347,-1	.106
16	.171,-1	.662,-1	.115	.939,-1	.605,-1	.576,-1	.442,-1	.743,-1	-.263,-1	.535,-1
17	-.457,-1	.763,-1	.554,-1	.143	.568,-1	.801,-1	.261,-1	.849,-1	.210,-1	.503,-1
18	.207,-1	.989,-1	.472,-1	.133	.672,-1	.853,-1	.516,-1	.049,-1	.302,-1	.634,-1
19	.412,-1	.857,-1	.557,-2	.707,-1	.843,-1	.920,-2	-.155,-1	-.462,-1	.560,-1	.652,-1
20	.221,-1	.834,-1	.280,-1	.342,-1	.351,-1	.787,-1	.463,-1	.235,-1	.254,-1	.617,-2
21	-.185,-1	.375,-1	.515,-1	.605,-1	.324,-1	.694,-1	.568,-1	.843,-3	.170,-1	.135,-1
22	-.237,-2	.687,-1	.574,-1	.327,-1	.103	.418,-1	.567,-1	.717,-2	-.256,-2	.535,-1
23	-.876,-2	.112	.789,-1	.260,-1	.536,-1	.180,-1	.559,-1	.508,-1	-.365,-2	.348,-1
24	-.366,-1	.872,-1	.454,-1	.380,-1	.747,-1	.399,-1	.323,-1	.789,-1	-.129,-1	.293,-1
25	-.439,-1	.904,-1	.420,-1	.593,-1	.513,-1	.273,-1	.322,-1	.226,-1	.376,-3	.254,-1
26	-.295,-1	.727,-1	.339,-2	.853,-1	.594,-1	.195,-1	-.186,-2	.396,-1	.137,-1	.101,-1
27	-.514,-1	.556,-1	.722,-1	.253,-1	.552,-1	-.186,-2	.648,-2	.235,-1	.264,-1	.475,-1
28	-.165,-1	.882,-1	.366,-1	.921,-1	-.109,-1	.586,-2	.314,-1	.652,-3	.389,-1	.652,-1
29	.540,-2	.106	-.449,-1	.833,-1	.205,-1	.496,-2	.479,-2	.169,-1	.225,-1	.620,-1
30	-.790,-2	.398,-1	-.301,-1	.642,-1	.344,-1	-.250,-1	.796,-1	-.230,-3	.629,-2	.164,-1
31	-.509,-1	.425,-1	.380,-2	.354,-1	.498,-1	.571,-1	.117	.365,-1	.117,-1	.416,-1
32	-.714,-1	.437,-1	.411,-1	.138,-1	.307,-1	-.239,-1	.288,-1	.475,-1	-.244,-1	.139,-1
33	-.752,-1	.969,-1	-.174,-1	.271,-1	.457,-1	.673,-1	.518,-1	.175,-1	-.104,-1	.768,-1
34	-.573,-1	.806,-1	-.367,-1	.469,-1	.501,-1	.321,-1	.488,-1	.226,-1	-.187,-1	.548,-1
35	-.843,-2	.370,-1	.171,-1	.675,-1	.980,-1	.170,-1	.305,-1	-.366,-1	.211,-1	.542,-1
36	-.316,-1	.305,-1	.319,-1	.563,-1	.118	-.559,-2	.111,-1	.463,-2	.469,-1	.262,-2
37	-.424,-1	.939,-1	-.489,-1	.364,-1	.997,-1	-.149,-1	.392,-1	-.148,-1	.115,-2	.682,-1
38	-.679,-1	.600,-1	.166,-2	.999,-2	.567,-1	-.140,-1	-.195,-1	-.257,-2	-.132,-1	.669,-1
39	-.247,-1	.524,-1	-.673,-1	.123,-1	-.198,-1	-.318,-1	.315,-1	.632,-1	-.167,-1	.624,-1
40	-.216,-1	.549,-1	-.378,-1	.149,-1	.234,-1	-.998,-2	.613,-1	.253,-1	-.126,-1	.722,-1
41	-.259,-1	-.258,-1	-.117,-1	.247,-1	.128,-1	-.248,-1	.446,-1	.478,-1	.596,-1	-.258,-2
42	-.710,-2	.257,-1	-.288,-1	-.376,-1	.164,-1	.157,-2	.280,-1	.578,-1	.271,-1	.307,-1
43	-.501,-1	.537,-1	.229,-1	-.921,-2	.183,-2	.270,-1	.514,-1	.123,-1	-.587,-2	-.154,-1
44	.183,-1	.150,-1	-.141,-1	.390,-1	.698,-1	.572,-2	.333,-1	.155,-1	.671,-1	.488,-1
45	-.236,-1	.506,-1	-.527,-1	.304,-1	.435,-1	.102	.778,-1	.680,-1	.211,-1	.299,-1
46	-.663,-2	.378,-1	-.286,-1	.134,-1	.972,-1	.387,-1	.362,-1	.739,-1	.318,-1	-.124,-1
47	.291,-1	-.447,-2	-.542,-2	.320,-1	.126	-.373,-2	.335,-1	-.453,-1	.467,-2	-.191,-1
48	-.577,-1	.545,-1	.913,-2	.323,-1	.701,-1	-.119,-2	.317,-1	.368,-1	-.375,-1	.250,-1
49	-.464,-1	.845,-1	-.939,-2	.550,-1	.636,-1	-.784,-2	.559,-1	.466,-1	-.333,-1	.442,-1
50	-.496,-1	.505,-1	-.267,-1	.960,-1	.177,-1	-.199,-2	-.120,-1	.169,-1	-.431,-1	.425,-1
51	-.339,-1	.546,-1	-.229,-1	.878,-2	.297,-1	-.297,-1	-.345,-3	-.142,-1	-.177,-1	.265,-1
52	-.241,-1	.471,-1	-.654,-1	.371,-1	.161,-1	-.509,-1	.358,-1	-.843,-3	.116,-1	.834,-1
53	-.919,-1	.965,-2	.903,-3	.473,-2	-.291,-1	-.996,-2	-.873,-2	.119,-1	.294,-2	.150,-1
54	-.101	.456,-1	.873,-2	-.166,-2	-.174,-1	.250,-2	.359,-1	.339,-1	-.250,-1	.102,-1
55	-.490,-1	.708,-1	.313,-1	.275,-1	.386,-2	-.195,-1	.771,-1	.475,-2	-.217,-1	.473,-1
56	.191,-1	.379,-1	.113,-2	-.168,-1	-.206,-1	-.349,-1	.648,-1	.433,-1	-.501,-1	.724,-1
57	.153,-1	.389,-1	-.303,-1	-.737,-1	.464,-1	-.222,-1	.209,-2	-.192,-1	.383,-1	-.449,-3
58	-.770,-1	.478,-1	-.251,-1	-.619,-1	-.407,-1	-.168,-1	.332,-1	-.605,-1	-.343,-2	.521,-2
59	-.613,-2	.807,-1	.222,-2	-.149,-1	-.405,-1	.291,-1	-.337,-2	-.434,-1	-.706,-2	.318,-1
60	-.392,-2	.640,-1	-.334,-1	-.211,-1	-.981,-2	-.212,-1	-.602,-1	-.323,-1	-.287,-1	-.145,-1

Run No. 35a; u component

	Separation Distance (m.)									
K	6	12	18	24	36	42	48	72	84	90
00	.327	.365	.328	.370	.443	.303	.363	.365	.406	.327
01	.333	.355	.316	.375	.419	.287	.365	.379	.399	.314
02	.355	.352	.296	.377	.407	.284	.358	.390	.410	.298
03	.365	.357	.288	.361	.396	.292	.379	.393	.422	.307
04	.371	.362	.289	.348	.390	.309	.390	.402	.426	.324
05	.355	.367	.302	.356	.387	.316	.389	.403	.414	.338
06	.357	.374	.319	.385	.377	.307	.385	.400	.400	.341
07	.362	.371	.330	.391	.377	.313	.388	.383	.398	.331
08	.370	.356	.330	.386	.378	.312	.373	.374	.402	.327
09	.384	.348	.315	.384	.387	.318	.373	.378	.395	.324
10	.383	.357	.330	.385	.384	.322	.380	.365	.388	.306
11	.359	.350	.336	.404	.370	.305	.375	.352	.403	.287
12	.348	.335	.342	.406	.364	.304	.375	.348	.413	.275
13	.342	.333	.352	.401	.370	.306	.401	.345	.427	.273
14	.355	.321	.355	.410	.369	.298	.407	.335	.414	.282
15	.359	.314	.349	.399	.371	.276	.410	.326	.394	.289
16	.342	.305	.325	.404	.375	.246	.406	.321	.375	.304
17	.335	.306	.310	.398	.376	.242	.405	.322	.366	.305
18	.319	.316	.323	.369	.379	.243	.394	.319	.366	.289
19	.296	.312	.343	.354	.376	.247	.382	.337	.370	.285
20	.295	.306	.334	.360	.370	.266	.392	.347	.368	.287
21	.283	.309	.351	.382	.393	.281	.395	.363	.368	.292
22	.295	.310	.349	.391	.415	.290	.402	.377	.383	.295
23	.312	.335	.341	.390	.396	.282	.422	.377	.370	.287
24	.313	.355	.333	.396	.359	.274	.447	.376	.356	.287
25	.316	.355	.334	.390	.347	.294	.458	.390	.331	.287
26	.301	.368	.340	.383	.355	.293	.456	.400	.327	.269
27	.314	.373	.343	.371	.369	.291	.444	.404	.343	.276
28	.305	.362	.332	.367	.375	.288	.426	.383	.361	.283
29	.296	.379	.301	.356	.364	.290	.404	.377	.364	.283
30	.280	.382	.284	.357	.359	.267	.409	.366	.360	.284
31	.261	.370	.295	.366	.354	.261	.413	.365	.361	.286
32	.252	.349	.303	.375	.359	.269	.416	.360	.373	.285
33	.230	.354	.305	.363	.385	.261	.404	.340	.359	.279
34	.210	.357	.307	.338	.393	.255	.402	.337	.345	.275
35	.210	.368	.343	.316	.405	.268	.405	.354	.356	.273
36	.204	.364	.357	.320	.405	.277	.399	.368	.372	.258
37	.224	.364	.373	.340	.399	.286	.396	.389	.381	.239
38	.238	.352	.363	.340	.391	.278	.401	.395	.377	.225
39	.237	.358	.339	.330	.379	.272	.399	.395	.358	.239
40	.238	.361	.333	.323	.360	.282	.379	.384	.367	.252
41	.238	.352	.328	.329	.370	.271	.393	.374	.352	.249
42	.226	.360	.318	.347	.384	.257	.363	.366	.346	.249
43	.219	.356	.300	.365	.389	.245	.353	.369	.373	.242
44	.219	.370	.285	.363	.383	.232	.330	.358	.311	.235
45	.241	.362	.277	.361	.373	.214	.343	.342	.320	.248
46	.273	.352	.276	.357	.371	.211	.357	.333	.345	.260
47	.265	.344	.273	.350	.380	.227	.362	.342	.320	.262
48	.264	.343	.270	.348	.390	.228	.367	.335	.306	.271
49	.258	.339	.273	.343	.384	.213	.381	.339	.297	.265
50	.247	.345	.284	.351	.372	.205	.385	.340	.286	.287
51	.249	.341	.282	.335	.357	.207	.388	.351	.293	.300
52	.254	.352	.266	.307	.354	.195	.388	.360	.281	.270
53	.270	.336	.254	.284	.359	.187	.370	.370	.264	.267
54	.262	.323	.258	.287	.371	.195	.375	.388	.254	.277
55	.265	.324	.270	.276	.377	.201	.385	.385	.255	.301
56	.234	.315	.253	.263	.375	.223	.384	.381	.291	.293
57	.233	.314	.243	.281	.375	.262	.376	.380	.333	.280
58	.237	.313	.247	.287	.369	.283	.383	.379	.333	.280
59	.234	.301	.278	.297	.360	.305	.388	.372	.335	.309
60	.236	.302	.271	.305	.347	.306	.386	.365	.339	.313

Run No. 35a; v component

	Separation Distance (m)									
K	6	12	18	24	36	42	48	72	84	96
00	.331	.234	.100	.242	.265	.229	.271	.172	.231	.160
01	.266	.265	.121	.258	.266	.253	.242	.176	.250	.174
02	.308	.223	.175	.230	.252	.255	.275	.161	.207	.162
03	.221	.201	.178	.209	.256	.272	.249	.196	.173	.190
04	.233	.209	.148	.199	.248	.262	.222	.202	.220	.209
05	.207	.169	.159	.235	.237	.239	.193	.185	.144	.186
06	.239	.231	.191	.236	.248	.224	.197	.194	.180	.163
07	.230	.186	.196	.239	.242	.198	.217	.167	.196	.202
08	.214	.232	.192	.245	.260	.206	.196	.177	.206	.197
09	.259	.215	.177	.191	.239	.220	.201	.222	.209	.200
10	.217	.202	.205	.207	.255	.235	.209	.137	.256	.237
11	.193	.220	.185	.216	.249	.215	.199	.127	.216	.216
12	.179	.215	.176	.218	.248	.210	.210	.900,-1	.194	.199
13	.186	.210	.218	.217	.253	.225	.180	.148	.195	.162
14	.211	.223	.170	.195	.260	.273	.236	.145	.197	.156
15	.190	.197	.122	.197	.234	.213	.221	.143	.160	.167
16	.219	.179	.136	.177	.216	.195	.213	.111	.210	.219
17	.199	.183	.126	.157	.265	.221	.212	.145	.196	.185
18	.167	.183	.162	.197	.276	.214	.213	.195	.175	.205
19	.170	.152	.180	.164	.267	.209	.190	.183	.198	.174
20	.202	.112	.182	.152	.210	.166	.141	.180	.199	.134
21	.209	.123	.176	.174	.174	.170	.172	.141	.194	.183
22	.217	.119	.189	.170	.230	.135	.149	.155	.184	.157
23	.205	.120	.175	.179	.224	.191	.225	.120	.211	.135
24	.192	.169	.134	.158	.263	.235	.218	.926,-1	.198	.133
25	.192	.157	.166	.185	.215	.196	.242	.152	.177	.160
26	.144	.181	.144	.193	.203	.182	.221	.872,-1	.201	.177
27	.154	.209	.133	.174	.171	.179	.215	.822,-1	.226	.172
28	.141	.227	.168	.157	.238	.190	.215	.109	.189	.157
29	.144	.209	.156	.124	.218	.149	.198	.109	.183	.178
30	.191	.173	.187	.165	.184	.138	.223	.144	.157	.167
31	.190	.162	.195	.163	.245	.190	.212	.110	.185	.152
32	.171	.194	.146	.189	.194	.179	.177	.189	.188	.136
33	.230	.154	.158	.150	.187	.185	.178	.130	.189	.150
34	.163	.166	.148	.142	.162	.197	.218	.110	.150	.121
35	.159	.138	.145	.133	.190	.164	.197	.123	.176	.139
36	.177	.132	.161	.178	.195	.142	.185	.149	.198	.161
37	.192	.108	.135	.191	.201	.150	.167	.148	.186	.142
38	.198	.107	.150	.230	.174	.202	.145	.152	.191	.172
39	.189	.138	.177	.141	.218	.143	.173	.112	.193	.173
40	.182	.160	.162	.159	.204	.122	.225	.165	.192	.189
41	.167	.235	.145	.189	.177	.129	.223	.143	.172	.159
42	.170	.187	.134	.166	.217	.154	.188	.154	.172	.173
43	.145	.174	.157	.152	.209	.150	.187	.115	.196	.149
44	.161	.196	.134	.142	.208	.133	.210	.987,-1	.208	.168
45	.174	.176	.120	.133	.206	.191	.188	.116	.198	.152
46	.151	.194	.132	.145	.200	.209	.190	.118	.202	.195
47	.155	.226	.148	.134	.227	.202	.179	.112	.203	.185
48	.157	.187	.181	.150	.190	.175	.179	.172	.210	.180
49	.209	.183	.154	.167	.217	.216	.177	.123	.193	.168
50	.167	.146	.133	.136	.191	.198	.204	.121	.171	.873,-1
51	.168	.148	.165	.141	.196	.189	.164	.108	.174	.853,-1
52	.128	.150	.144	.947,-1	.177	.159	.184	.109	.232	.110
53	.177	.164	.111	.112	.191	.118	.170	.156	.164	.163
54	.190	.120	.156	.173	.211	.137	.165	.152	.199	.131
55	.178	.120	.930,-1	.174	.195	.153	.147	.141	.159	.123
56	.179	.156	.669,-1	.203	.183	.128	.161	.928,-1	.127	.888,-1
57	.144	.124	.831,-1	.189	.218	.140	.199	.105	.125	.108
58	.154	.203	.715,-1	.176	.253	.149	.152	.156	.142	.147
59	.123	.157	.106	.170	.207	.187	.170	.180	.194	.112
60	.122	.131	.866,-1	.125	.213	.123	.145	.144	.17[illegible]	.109

Run No. 39 ; u component

	Separation Distance (m.)									
K	6	12	18	24	36	42	48	72	84	90
00	.844	.849	.858	.840	.830	.855	.834	.842	.827	.847
01	.852	.849	.858	.843	.820	.854	.833	.845	.829	.840
02	.851	.846	.859	.845	.828	.844	.836	.835	.828	.838
03	.852	.838	.865	.849	.824	.833	.836	.832	.830	.837
04	.855	.837	.866	.851	.831	.833	.834	.831	.829	.832
05	.856	.836	.861	.846	.835	.837	.841	.839	.830	.830
06	.858	.840	.855	.834	.832	.840	.842	.839	.829	.832
07	.864	.844	.846	.833	.831	.841	.840	.841	.832	.834
08	.858	.833	.851	.833	.831	.838	.836	.841	.843	.830
09	.854	.827	.858	.836	.823	.842	.827	.840	.838	.833
10	.852	.830	.853	.836	.822	.848	.825	.842	.834	.834
11	.847	.826	.858	.832	.819	.850	.832	.837	.839	.833
12	.847	.831	.853	.831	.810	.846	.835	.830	.834	.835
13	.844	.837	.849	.837	.810	.838	.837	.822	.827	.840
14	.837	.834	.846	.839	.815	.837	.829	.819	.814	.841
15	.839	.832	.836	.842	.812	.845	.822	.819	.813	.840
16	.845	.833	.853	.835	.812	.845	.815	.822	.809	.839
17	.854	.820	.836	.827	.809	.841	.808	.825	.804	.838
18	.854	.814	.843	.827	.805	.832	.802	.826	.813	.829
19	.853	.815	.844	.826	.808	.824	.803	.824	.815	.821
20	.848	.825	.844	.815	.809	.820	.803	.819	.819	.819
21	.844	.828	.837	.811	.809	.817	.802	.816	.823	.815
22	.841	.827	.831	.806	.804	.822	.800	.809	.820	.814
23	.839	.828	.823	.809	.805	.826	.804	.809	.809	.805
24	.830	.824	.822	.814	.809	.822	.807	.810	.803	.811
25	.830	.819	.821	.821	.809	.827	.809	.812	.812	.808
26	.824	.811	.811	.814	.812	.824	.811	.811	.812	.811
27	.814	.803	.814	.807	.807	.821	.808	.813	.812	.814
28	.809	.801	.817	.806	.811	.820	.807	.808	.809	.823
29	.819	.799	.819	.798	.804	.816	.810	.801	.813	.819
30	.807	.797	.817	.798	.802	.809	.816	.808	.806	.814
31	.813	.797	.811	.794	.799	.808	.809	.808	.809	.809
32	.816	.791	.813	.791	.795	.807	.799	.800	.817	.809
33	.811	.800	.811	.793	.790	.804	.799	.801	.820	.806
34	.812	.799	.809	.802	.785	.799	.805	.796	.820	.809
35	.806	.797	.809	.804	.786	.787	.808	.800	.817	.807
36	.804	.794	.812	.794	.789	.784	.805	.797	.811	.803
37	.807	.792	.803	.786	.791	.785	.806	.794	.804	.802
38	.800	.781	.804	.786	.796	.789	.801	.794	.805	.802
39	.799	.776	.797	.783	.791	.792	.799	.792	.804	.805
40	.795	.791	.801	.787	.777	.789	.800	.787	.802	.805
41	.788	.783	.804	.788	.772	.784	.795	.789	.798	.809
42	.781	.785	.803	.785	.770	.786	.796	.792	.800	.805
43	.777	.784	.805	.791	.776	.790	.796	.794	.801	.800
44	.775	.779	.799	.790	.775	.793	.794	.800	.804	.811
45	.786	.775	.792	.786	.777	.794	.797	.799	.805	.811
46	.796	.773	.793	.788	.776	.786	.800	.793	.799	.807
47	.796	.772	.791	.784	.772	.782	.797	.797	.798	.801
48	.796	.773	.784	.777	.766	.776	.801	.800	.793	.798
49	.793	.775	.784	.771	.770	.781	.805	.802	.792	.798
50	.797	.773	.778	.765	.776	.780	.801	.799	.788	.796
51	.796	.769	.783	.759	.765	.785	.796	.799	.787	.795
52	.786	.769	.790	.762	.757	.785	.794	.794	.779	.798
53	.782	.770	.790	.773	.752	.776	.790	.794	.783	.805
54	.781	.774	.793	.774	.755	.767	.795	.786	.782	.804
55	.781	.773	.785	.770	.750	.758	.799	.791	.774	.805
56	.775	.762	.775	.770	.753	.770	.797	.786	.773	.803
57	.775	.774	.776	.763	.747	.774	.798	.793	.782	.800
58	.769	.780	.781	.769	.743	.773	.789	.782	.781	.798
59	.757	.784	.778	.758	.751	.773	.784	.779	.780	.795
60	.758	.776	.771	.750	.747	.765	.780	.775	.769	.790

Run No. 39 ; v component

K	Separation Distance (m.)									
	6	12	18	24	36	42	48	72	84	90
00	.817	.861	.830	.825	.787	.759	.737	.794	.749	.731
01	.818	.868	.825	.822	.786	.764	.739	.783	.751	.732
02	.812	.862	.828	.827	.783	.757	.739	.788	.762	.735
03	.808	.866	.840	.824	.780	.760	.720	.796	.755	.735
04	.804	.865	.840	.824	.786	.774	.724	.789	.761	.728
05	.799	.865	.845	.826	.791	.778	.723	.793	.748	.738
06	.801	.859	.832	.824	.802	.771	.742	.791	.765	.726
07	.797	.851	.823	.828	.794	.778	.746	.797	.764	.736
08	.811	.843	.836	.819	.797	.774	.736	.799	.759	.728
09	.797	.854	.818	.811	.789	.767	.739	.794	.762	.723
10	.788	.845	.817	.809	.787	.750	.745	.790	.753	.735
11	.787	.847	.820	.818	.789	.760	.748	.781	.756	.741
12	.788	.843	.816	.816	.782	.760	.752	.781	.768	.741
13	.796	.836	.823	.817	.793	.757	.738	.782	.754	.728
14	.794	.847	.822	.819	.792	.755	.740	.776	.747	.726
15	.773	.841	.816	.808	.784	.761	.733	.783	.742	.723
16	.784	.836	.818	.805	.794	.771	.742	.778	.743	.723
17	.781	.843	.823	.811	.792	.766	.737	.780	.740	.713
18	.791	.846	.821	.823	.795	.766	.745	.781	.740	.712
19	.792	.839	.814	.816	.791	.758	.724	.774	.743	.703
20	.773	.838	.811	.816	.790	.749	.732	.777	.747	.723
21	.784	.844	.819	.810	.773	.754	.738	.785	.742	.711
22	.788	.840	.823	.809	.786	.755	.734	.776	.752	.728
23	.790	.841	.824	.815	.782	.759	.731	.776	.742	.719
24	.780	.839	.829	.820	.787	.757	.729	.787	.741	.711
25	.784	.832	.825	.812	.778	.761	.728	.785	.740	.729
26	.785	.834	.811	.804	.774	.762	.718	.775	.742	.718
27	.781	.840	.807	.806	.759	.755	.719	.769	.744	.717
28	.781	.827	.805	.809	.776	.756	.708	.771	.728	.719
29	.770	.825	.801	.809	.780	.754	.717	.768	.732	.726
30	.763	.829	.811	.808	.771	.739	.719	.768	.744	.720
31	.771	.834	.809	.797	.763	.745	.706	.775	.738	.716
32	.770	.824	.795	.795	.759	.740	.706	.766	.738	.721
33	.776	.822	.809	.796	.756	.748	.713	.761	.735	.717
34	.776	.828	.809	.796	.763	.747	.712	.760	.727	.719
35	.766	.823	.802	.794	.757	.734	.712	.758	.739	.708
36	.772	.824	.807	.791	.763	.741	.715	.770	.740	.706
37	.771	.820	.795	.790	.762	.745	.711	.765	.739	.699
38	.762	.812	.788	.781	.751	.736	.720	.757	.731	.705
39	.751	.818	.798	.786	.747	.731	.711	.759	.719	.700
40	.758	.816	.779	.784	.755	.730	.703	.756	.727	.709
41	.768	.823	.792	.785	.754	.727	.716	.755	.721	.711
42	.760	.816	.790	.774	.750	.737	.713	.765	.719	.706
43	.754	.817	.790	.783	.737	.728	.700	.762	.725	.709
44	.764	.802	.786	.738	.746	.734	.692	.762	.719	.702
45	.774	.807	.769	.783	.737	.720	.693	.760	.720	.704
46	.759	.806	.779	.797	.747	.733	.700	.765	.729	.703
47	.751	.807	.781	.778	.728	.726	.691	.753	.724	.699
48	.757	.811	.784	.770	.748	.734	.693	.749	.703	.699
49	.757	.804	.736	.770	.759	.738	.705	.753	.741	.702
50	.753	.798	.785	.773	.748	.734	.685	.739	.711	.700
51	.759	.799	.787	.762	.751	.736	.688	.737	.719	.694
52	.740	.802	.782	.770	.754	.731	.674	.751	.711	.682
53	.747	.798	.779	.777	.740	.722	.679	.743	.700	.672
54	.738	.804	.786	.777	.747	.720	.685	.735	.699	.691
55	.743	.793	.779	.770	.753	.722	.680	.745	.715	.680
56	.751	.795	.779	.770	.730	.708	.678	.742	.705	.679
57	.746	.798	.779	.760	.731	.715	.679	.737	.694	.682
58	.740	.796	.768	.774	.730	.716	.681	.742	.698	.707
59	.731	.777	.772	.764	.738	.720	.676	.736	.696	.698
60	.740	.779	.767	.759	.744	.714	.672	.742	.698	.702

Run No. 43 ; u component

K	Separation Distance (n.)									
	6	12	18	24	36	42	48	72	84	90
00	.815	.673	.619	.607	.524	.532	.416	.360	.361	.365
01	.748	.633	.581	.571	.522	.503	.423	.348	.333	.343
02	.693	.599	.549	.540	.504	.487	.429	.344	.315	.340
03	.658	.559	.522	.518	.478	.474	.418	.317	.301	.328
04	.629	.533	.513	.509	.458	.460	.402	.288	.283	.313
05	.597	.512	.492	.479	.443	.437	.397	.286	.272	.295
06	.578	.485	.483	.469	.423	.413	.383	.280	.256	.289
07	.553	.471	.467	.464	.400	.396	.361	.273	.255	.272
08	.524	.463	.442	.450	.386	.381	.355	.279	.247	.261
09	.495	.444	.413	.439	.372	.358	.335	.280	.236	.248
10	.456	.418	.395	.422	.352	.348	.316	.277	.226	.225
11	.427	.398	.377	.392	.335	.331	.303	.273	.195	.209
12	.402	.371	.366	.367	.315	.320	.293	.254	.178	.208
13	.378	.362	.349	.355	.294	.307	.241	.222	.174	.209
14	.355	.348	.333	.338	.284	.296	.235	.217	.168	.200
15	.348	.322	.327	.333	.273	.285	.240	.212	.161	.195
16	.326	.318	.323	.323	.265	.286	.242	.198	.158	.189
17	.313	.312	.306	.313	.271	.271	.242	.187	.155	.177
18	.300	.300	.304	.306	.265	.244	.241	.187	.154	.169
19	.294	.301	.298	.296	.241	.217	.233	.194	.153	.158
20	.299	.292	.283	.286	.215	.189	.220	.190	.147	.165
21	.305	.285	.274	.268	.189	.178	.212	.185	.148	.171
22	.295	.269	.251	.257	.183	.179	.206	.198	.155	.152
23	.273	.251	.236	.243	.178	.173	.205	.205	.145	.150
24	.260	.241	.239	.228	.163	.160	.201	.200	.140	.144
25	.244	.250	.244	.211	.140	.143	.214	.189	.133	.139
26	.244	.246	.231	.199	.111	.123	.212	.194	.131	.134
27	.231	.224	.213	.180	.103	.106	.197	.195	.123	.129
28	.217	.212	.196	.177	.972,-1	.962,-1	.172	.190	.107	.117
29	.203	.194	.190	.160	.831,-1	.932,-1	.159	.182	.967,-1	.105
30	.181	.184	.184	.152	.791,-1	.908,-1	.161	.168	.926,-1	.114
31	.174	.171	.170	.153	.791,-1	.890,-1	.171	.156	.887,-1	.128
32	.175	.160	.155	.148	.872,-1	.896,-1	.172	.154	.933,-1	.126
33	.166	.147	.141	.150	.892,-1	.932,-1	.171	.157	.105	.127
34	.150	.141	.138	.144	.999,-1	.920,-1	.156	.152	.101	.133
35	.149	.129	.126	.147	.932,-1	.848,-1	.137	.150	.105	.142
36	.153	.118	.117	.142	.925,-1	.854,-1	.131	.139	.120	.141
37	.142	.114	.130	.134	.831,-1	.944,-1	.136	.139	.134	.129
38	.122	.132	.129	.124	.918,-1	.986,-1	.142	.142	.131	.136
39	.115	.135	.110	.125	.106	.992,-1	.145	.147	.117	.142
40	.109	.115	.970,-1	.124	.107	.890,-1	.146	.141	.115	.144
41	.100	.103	.976,-1	.133	.761,-1	.722,-1	.150	.150	.107	.133
42	.950,-1	.987,-1	.920,-1	.142	.510,-1	.607,-1	.160	.150	.101	.135
43	.105	.961,-1	.104	.121	.478,-1	.667,-1	.158	.132	.943,-1	.126
44	.107	.907,-1	.988,-1	.983,-1	.472,-1	.696,-1	.164	.120	.821,-1	.114
45	.112	.758,-1	.959,-1	.941,-1	.416,-1	.595,-1	.170	.110	.674,-1	.107
46	.114	.720,-1	.810,-1	.887,-1	.359,-1	.605,-1	.161	.116	.541,-1	.917,-1
47	.102	.660,-1	.782,-1	.815,-1	.370,-1	.658,-1	.154	.110	.459,-1	.805,-1
48	.908,-1	.632,-1	.673,-1	.686,-1	.435,-1	.692,-1	.135	.841,-1	.482,-1	.656,-1
49	.901,-1	.612,-1	.562,-1	.665,-1	.537,-1	.631,-1	.130	.651,-1	.492,-1	.590,-1
50	.940,-1	.505,-1	.572,-1	.702,-1	.422,-1	.553,-1	.118	.586,-1	.308,-1	.484,-1
51	.822,-1	.456,-1	.592,-1	.721,-1	.306,-1	.505,-1	.102	.530,-1	.126,-1	.233,-1
52	.777,-1	.484,-1	.547,-1	.601,-1	.286,-1	.504,-1	.103	.572,-1	-.191,-2	.244,-2
53	.723,-1	.406,-1	.501,-1	.548,-1	.166,-1	.557,-1	.102	.526,-1	-.871,-2	.128,-1
54	.805,-1	.302,-1	.432,-1	.489,-1	.270,-1	.663,-1	.108	.358,-1	-.851,-2	.110,-1
55	.749,-1	.262,-1	.510,-1	.376,-1	.369,-1	.655,-1	.106	.350,-1	-.182,-1	-.366,-2
56	.600,-1	.261,-1	.606,-1	.400,-1	.412,-1	.627,-1	.936,-1	.387,-1	-.376,-1	-.259,-1
57	.948,-1	.279,-1	.619,-1	.411,-1	.306,-1	.742,-1	.737,-1	.310,-1	-.501,-1	-.388,-1
58	.829,-1	.206,-1	.568,-1	.437,-1	.355,-1	.776,-1	.749,-1	.186,-1	-.625,-1	-.452,-1
59	.764,-1	.203,-1	.593,-1	.417,-1	.434,-1	.902,-1	.779,-1	.587,-2	-.749,-1	-.451,-1
60	.641,-1	.262,-1	.542,-1	.354,-1	.455,-1	.830,-1	.620,-1	.675,-2	-.852,-1	-.557,-1

Run No. 43 ; v c

Separation Dis[illegible]

K	6	12	18	24	36	[illegible]	48	72	84	90
00	.898	.814	.794	.766	.708	.690	.714	.632	.627	.598
01	.839	.781	.763	.742	.681	.681	.701	.627	.608	.592
02	.800	.751	.730	.716	.667	.659	.685	.620	.596	.580
03	.770	.730	.701	.691	.652	.641	.677	.605	.584	.562
04	.730	.703	.683	.673	.637	.631	.667	.588	.568	.542
05	.704	.673	.665	.652	.626	.617	.655	.577	.554	.530
06	.684	.654	.637	.631	.608	.594	.640	.570	.534	.509
07	.655	.630	.618	.615	.594	.582	.617	.549	.520	.495
08	.630	.617	.608	.601	.568	.571	.605	.532	.512	.480
09	.618	.595	.588	.582	.560	.570	.603	.524	.488	.463
10	.598	.579	.560	.570	.553	.554	.593	.515	.476	.459
11	.589	.558	.558	.564	.537	.534	.572	.494	.461	.453
12	.572	.546	.546	.551	.532	.519	.559	.476	.467	.444
13	.558	.533	.532	.545	.511	.495	.545	.467	.457	.425
14	.561	.526	.524	.527	.500	.481	.528	.456	.449	.423
15	.548	.526	.514	.513	.485	.460	.505	.451	.435	.409
16	.537	.525	.501	.499	.467	.446	.485	.442	.435	.411
17	.525	.504	.479	.487	.460	.440	.477	.438	.442	.423
18	.524	.487	.473	.477	.453	.440	.473	.431	.448	.426
19	.515	.473	.464	.466	.446	.429	.464	.429	.447	.417
20	.501	.460	.448	.449	.433	.413	.453	.430	.440	.409
21	.496	.442	.434	.446	.418	.392	.450	.437	.427	.401
22	.482	.429	.424	.432	.407	.385	.447	.444	.424	.403
23	.469	.423	.413	.414	.401	.385	.436	.437	.423	.394
24	.465	.409	.405	.395	.404	.384	.438	.431	.420	.392
25	.454	.401	.394	.396	.398	.376	.433	.423	.421	.374
26	.445	.398	.378	.404	.395	.372	.431	.410	.402	.370
27	.432	.387	.370	.399	.385	.373	.434	.408	.405	.371
28	.417	.380	.365	.394	.384	.374	.429	.396	.397	.378
29	.406	.377	.356	.388	.382	.367	.427	.399	.395	.381
30	.384	.370	.349	.383	.379	.370	.423	.400	.398	.378
31	.375	.364	.346	.382	.383	.371	.419	.402	.392	.371
32	.368	.358	.336	.391	.396	.373	.417	.411	.393	.372
33	.356	.352	.335	.379	.400	.376	.413	.402	.386	.369
34	.351	.339	.333	.378	.407	.376	.406	.392	.381	.370
35	.349	.351	.341	.384	.397	.366	.408	.384	.379	.364
36	.342	.363	.338	.388	.396	.371	.410	.385	.384	.374
37	.341	.366	.345	.393	.389	.360	.408	.382	.392	.385
38	.347	.366	.349	.387	.375	.352	.413	.383	.395	.383
39	.349	.362	.328	.380	.366	.348	.402	.387	.384	.376
40	.348	.352	.334	.370	.352	.339	.396	.390	.381	.364
41	.346	.356	.339	.365	.350	.332	.387	.387	.374	.359
42	.343	.353	.334	.354	.344	.337	.381	.384	.377	.354
43	.344	.352	.325	.350	.347	.343	.381	.384	.373	.359
44	.342	.343	.328	.345	.347	.337	.390	.383	.370	.360
45	.335	.346	.330	.338	.343	.330	.387	.364	.367	.357
46	.332	.340	.327	.333	.330	.319	.388	.365	.371	.362
47	.335	.333	.332	.334	.326	.315	.382	.366	.368	.364
48	.332	.333	.335	.335	.319	.308	.382	.375	.364	.360
49	.341	.332	.335	.330	.320	.304	.379	.379	.359	.352
50	.348	.335	.333	.321	.316	.315	.384	.372	.347	.342
51	.352	.327	.327	.319	.319	.319	.388	.374	.345	.338
52	.353	.330	.330	.319	.322	.319	.387	.365	.335	.323
53	.348	.334	.331	.334	.320	.311	.390	.353	.321	.310
54	.353	.337	.328	.338	.308	.310	.390	.348	.312	.300
55	.361	.346	.332	.332	.311	.310	.390	.330	.304	.294
56	.361	.340	.331	.331	.314	.310	.390	.332	.303	.296
57	.361	.337	.329	.331	.309	.300	.381	.328	.294	.292
58	.360	.323	.324	.329	.296	.288	.371	.321	.294	.287
59	.353	.327	.323	.326	.295	.283	.365	.319	.298	.289
60	.347	.326	.326	.315	.284	.278	.368	.316	.304	.287

Run No. 45 ; u component

	Separation Distance (m.)									
K	1	4	5	16	20	21	64	80	84	85
00	.835				.471	.356	.999,-1		.498,-1	.106,-1
01	.738				.466	.373	.875,-1		.471,-1	.143,-1
02	.589				.455	.373	.933,-1		.497,-1	.163,-1
03	.493				.431	.363	.814,-1		.556,-1	.536,-2
04	.420				.416	.340	.775,-1		.597,-1	.664,-2
05	.371				.388	.322	.930,-1		.348,-1	-.228,-1
06	.342				.372	.297	.110		.315,-1	-.127,-1
07	.311				.355	.293	.112		.266,-1	-.172,-1
08	.271				.361	.297	.125		.108,-1	-.409,-1
09	.259				.334	.266	.124		.836,-2	-.420,-1
10	.226				.317	.249	.115		.210,-1	-.418,-1
11	.199				.308	.235	.131		.110,-1	-.309,-1
12	.178				.276	.226	.119		.361,-1	-.200,-1
13	.146				.266	.230	.124		.448,-1	-.271,-1
14	.137				.237	.193	.124		.423,-1	.106,-3
15	.118				.237	.190	.142		.523,-1	.120,-1
16	.994,-1				.231	.197	.136		.611,-1	.393,-1
17	.795,-1				.225	.173	.121		.559,-1	.381,-1
18	.645,-1				.222	.179	.131		.571,-1	.493,-1
19	.673,-1				.215	.179	.133		.601,-1	.497,-1
20	.717,-1				.213	.179	.119		.785,-1	.719,-1
21	.782,-1				.208	.188	.112		.707,-1	.859,-1
22	.107				.211	.185	.105		.731,-1	.833,-1
23	.116				.212	.182	.128		.656,-1	.659,-1
24	.101				.228	.183	.132		.594,-1	.489,-1
25	.994,-1				.216	.176	.147		.425,-1	.317,-1
26	.114				.217	.186	.151		.187,-1	.261,-2
27	.121				.190	.157	.150		.358,-1	.901,-3
28	.120				.167	.146	.124		.365,-1	.134,-1
29	.131				.164	.148	.107		.342,-1	.140,-1
30	.135				.152	.139	.115		.376,-1	.304,-1
31	.120				.141	.123	.133		.450,-1	.407,-1
32	.103				.161	.134	.124		.665,-1	.483,-1
33	.872,-1				.167	.138	.118		.711,-1	.557,-1
34	.101				.180	.144	.928,-1		.862,-1	.737,-1
35	.110				.202	.163	.979,-1		.803,-1	.764,-1
36	.101				.190	.158	.104		.788,-1	.528,-1
37	.106				.217	.170	.126		.841,-1	.382,-1
38	.986,-1				.218	.161	.141		.928,-1	.466,-1
39	.101				.212	.170	.135		.795,-1	.398,-1
40	.120				.200	.169	.139		.629,-1	.222,-1
41	.117				.191	.156	.118		.740,-1	.443,-1
42	.109				.189	.134	.114		.836,-1	.439,-1
43	.104				.194	.133	.111		.858,-1	.491,-1
44	.117				.192	.146	.102		.100	.509,-1
45	.119				.201	.159	.102		.787,-1	.551,-1
46	.101				.196	.176	.101		.477,-1	.353,-1
47	.899,-1				.188	.162	.853,-1		.265,-1	.197,-1
48	.605,-1				.187	.172	.898,-1		.338,-1	.157,-1
49	.479,-1				.175	.170	.947,-1		.585,-1	.167,-1
50	.503,-1				.167	.150	.125		.801,-1	.424,-1
51	.689,-1				.195	.176	.133		.872,-1	.487,-1
52	.856,-1				.189	.144	.128		.864,-1	.591,-1
53	.856,-1				.159	.148	.128		.108	.796,-1
54	.789,-1				.135	.127	.136		.100	.772,-1
55	.812,-1				.118	.839,-1	.153		.850,-1	.662,-1
56	.925,-1				.123	.863,-1	.166		.880,-1	.577,-1
57	.925,-1				.115	.660,-1	.187		.979,-1	.489,-1
58	.700,-1				.825,-1	.470,-1	.201		.109	.507,-1
59	.656,-1				.704,-1	.352,-1	.187		.111	.665,-1
60	.654,-1				.683,-1	.277,-1	.172		.122	.761,-1

Run No. 45 ; v component

	Separation Distance (m.)									
K	1	4	5	16	20	21	64	80	84	85
00	.793				.573	.567	.367		.331	.347
01	.803				.572	.579	.366		.316	.332
02	.716				.585	.572	.371		.316	.314
03	.663				.578	.566	.351		.333	.321
04	.623				.576	.574	.356		.351	.323
05	.600				.584	.573	.364		.322	.312
06	.614				.578	.572	.375		.311	.329
07	.598				.572	.564	.379		.300	.307
08	.595				.550	.559	.374		.307	.304
09	.588				.544	.535	.356		.304	.296
10	.566				.532	.532	.348		.290	.294
11	.558				.495	.523	.342		.288	.286
12	.545				.514	.501	.335		.288	.278
13	.549				.488	.494	.324		.282	.301
14	.551				.445	.474	.329		.269	.272
15	.505				.446	.451	.330		.271	.285
16	.498				.429	.432	.335		.263	.275
17	.475				.431	.428	.331		.262	.271
18	.458				.428	.436	.318		.285	.286
19	.462				.424	.430	.329		.283	.289
20	.458				.404	.423	.327		.280	.286
21	.444				.414	.422	.329		.281	.283
22	.438				.402	.403	.311		.292	.281
23	.447				.395	.406	.317		.295	.295
24	.438				.384	.391	.309		.287	.276
25	.434				.389	.394	.323		.261	.281
26	.417				.383	.391	.298		.249	.272
27	.399				.365	.390	.284		.240	.263
28	.400				.351	.366	.266		.219	.258
29	.415				.347	.371	.272		.205	.236
30	.404				.346	.368	.270		.226	.239
31	.387				.322	.350	.232		.222	.216
32	.407				.316	.343	.211		.222	.219
33	.401				.302	.334	.220		.217	.215
34	.404				.312	.310	.201		.195	.209
35	.412				.312	.333	.177		.187	.201
36	.399				.313	.319	.169		.185	.222
37	.386				.309	.312	.181		.172	.190
38	.386				.290	.314	.201		.157	.184
39	.359				.295	.303	.175		.154	.194
40	.376				.286	.308	.194		.150	.168
41	.368				.267	.287	.184		.148	.172
42	.364				.277	.305	.184		.145	.172
43	.377				.276	.284	.202		.158	.175
44	.365				.278	.300	.167		.115	.161
45	.358				.263	.280	.149		.113	.159
46	.357				.265	.262	.153		.123	.146
47	.340				.275	.271	.159		.115	.149
48	.348				.256	.273	.129		.117	.133
49	.343				.263	.276	.117		.101	.129
50	.326				.257	.285	.116		.117	.128
51	.339				.244	.280	.103		.109	.139
52	.331				.223	.255	.119		.115	.131
53	.333				.218	.237	.130		.120	.141
54	.333				.216	.222	.141		.128	.157
55	.318				.197	.225	.106		.140	.163
56	.329				.220	.218	.715,-1		.116	.143
57	.315				.202	.211	.855,-1		.102,	.117
58	.307				.209	.215	.792,-1		.812,-1	.105
59	.283				.208	.221	.515,-1		.819,-1	.103
60	.283				.188	.223	.323,-1		.839,-1	.114

Run No. 46 ; u component

Separation Distance (m.)

K	6	12	18	24	36	42	48	72	84	90
00	.396	.310	.251	.204	.208	.194	.293	.149	.159	.205
01	.393	.269	.287	.212	.202	.193	.294	.150	.151	.182
02	.397	.238	.299	.214	.223	.212	.278	.137	.129	.149
03	.399	.217	.297	.205	.252	.222	.263	.134	.132	.145
04	.396	.200	.265	.203	.283	.230	.273	.142	.162	.158
05	.349	.214	.226	.219	.298	.222	.289	.154	.174	.173
06	.315	.232	.202	.222	.319	.221	.299	.142	.192	.184
07	.277	.233	.196	.218	.323	.230	.301	.150	.201	.185
08	.240	.210	.188	.204	.308	.220	.302	.161	.215	.208
09	.208	.227	.200	.179	.292	.222	.304	.150	.192	.210
10	.204	.230	.231	.143	.293	.231	.305	.151	.188	.195
11	.191	.230	.225	.127	.301	.215	.307	.165	.178	.189
12	.175	.248	.205	.132	.294	.217	.299	.144	.165	.177
13	.172	.262	.231	.124	.284	.228	.269	.138	.170	.181
14	.148	.264	.227	.132	.268	.206	.295	.141	.176	.179
15	.147	.267	.227	.140	.267	.202	.290	.127	.185	.178
16	.159	.273	.231	.144	.266	.192	.286	.134	.195	.163
17	.172	.276	.224	.149	.269	.188	.280	.126	.202	.148
18	.190	.274	.205	.141	.268	.173	.281	.137	.210	.142
19	.196	.252	.201	.154	.259	.168	.278	.125	.211	.157
20	.191	.235	.213	.665,-1	.240	.167	.284	.139	.203	.156
21	.186	.214	.207	.171	.221	.164	.295	.149	.190	.140
22	.180	.197	.200	.165	.221	.162	.317	.142	.194	.122
23	.145	.190	.195	.159	.214	.164	.325	.125	.167	.105
24	.126	.200	.191	.148	.224	.164	.328	.125	.154	.105
25	.102	.198	.169	.129	.213	.173	.326	.115	.156	.859,-2
26	.120	.213	.181	.143	.205	.198	.317	.101	.151	.920,-1
27	.128	.224	.208	.152	.207	.211	.322	.118	.156	.963,-1
28	.129	.238	.205	.164	.137	.208	.318	.109	.154	.979,-1
29	.108	.240	.190	.176	.168	.204	.308	.912,-1	.143	.914,-1
30	.960,-1	.230	.189	.182	.188	.197	.285	.118	.131	.983,-1
31	.981,-1	.218	.179	.192	.185	.201	.259	.113	.142	.113
32	.982,-1	.220	.164	.194	.185	.226	.243	.105	.163	.108
33	.940,-1	.212	.184	.187	.182	.226	.247	.999,-1	.176	.111
34	.845,-1	.215	.192	.175	.193	.221	.246	.109	.169	.120
35	.889,-1	.220	.183	.163	.199	.230	.234	.921,-1	.170	.111
36	.865,-1	.210	.191	.172	.196	.243	.223	.821,-1	.180	.940,-1
37	.755,-1	.196	.179	.174	.187	.248	.248	.865,-1	.179	.112
38	.671,-1	.193	.170	.163	.189	.257	.246	.102	.191	.127
39	.815,-1	.212	.157	.154	.189	.255	.228	.104	.211	.124
40	.929,-1	.206	.143	.160	.205	.259	.211	.942,-1	.223	.135
41	.889,-1	.196	.126	.163	.207	.259	.228	.922,-1	.210	.137
42	.700,-1	.181	.102	.146	.218	.245	.237	.116	.202	.130
43	.806,-1	.171	.791,-1	.134	.235	.244	.241	.109	.198	.128
44	.103	.167	.727,-1	.136	.254	.246	.232	.100	.207	.149
45	.972,-1	.140	.717,-1	.143	.260	.247	.235	.108	.209	.152
46	.941,-1	.130	.841,-1	.159	.264	.259	.242	.117	.229	.149
47	.755,-1	.109	.973,-1	.185	.262	.243	.238	.139	.222	.152
48	.544,-1	.735,-1	.979,-1	.196	.257	.210	.243	.133	.217	.157
49	.548,-1	.445,-1	.746,-1	.198	.246	.181	.231	.142	.218	.160
50	.627,-1	.226,-1	.772,-1	.185	.233	.187	.225	.158	.215	.177
51	.683,-1	-.528,-2	.703,-1	.188	.225	.192	.229	.155	.215	.175
52	.873,-1	-.186,-1	.638,-1	.189	.216	.184	.221	.167	.229	.168
53	.907,-1	-.172,-2	.579,-1	.175	.210	.182	.226	.176	.238	.181
54	.990,-1	.154,-1	.620,-1	.195	.210	.178	.232	.196	.238	.185
55	.118	.280,-1	.606,-1	.195	.214	.171	.238	.190	.231	.184
56	.125	.394,-1	.633,-1	.195	.215	.138	.358,-1	.210	.236	.167
57	.136	.684,-1	.425,-1	.199	.216	.130	.242	.201	.235	.166
58	.129	.765,-1	.285,-1	.207	.209	.131	.243	.190	.216	.176
59	.110	.591,-1	.155,-1	.211	.200	.136	.252	.202	.210	.189
60	.104	.426,-1	.105,-1	.204	.207	.140	.240	.222	.208	.203

Run No. 46 ; v component

Separation Distance (m.)

K	6	12	18	24	36	42	48	72	84	90
00	.596	.519	.492	.538	.494	.508	.521	.484	.463	.488
01	.563	.512	.510	.539	.488	.510	.504	.476	.465	.495
02	.510	.491	.508	.546	.497	.499	.498	.492	.462	.508
03	.493	.467	.463	.538	.482	.549	.516	.494	.449	.484
04	.489	.472	.478	.541	.517	.547	.509	.469	.446	.471
05	.487	.452	.467	.543	.518	.540	.517	.476	.428	.485
06	.487	.464	.488	.543	.517	.500	.494	.471	.437	.457
07	.462	.489	.475	.522	.510	.511	.509	.472	.447	.464
08	.467	.453	.459	.496	.504	.515	.492	.465	.440	.456
09	.469	.460	.494	.478	.503	.516	.498	.456	.447	.449
10	.469	.471	.465	.473	.490	.512	.501	.466	.450	.434
11	.482	.475	.482	.505	.497	.501	.509	.463	.453	.471
12	.451	.476	.494	.505	.508	.521	.485	.478	.460	.466
13	.476	.484	.500	.502	.508	.530	.479	.481	.458	.459
14	.465	.484	.518	.510	.525	.540	.483	.476	.482	.479
15	.474	.493	.525	.520	.511	.537	.503	.472	.478	.444
16	.469	.497	.508	.515	.509	.533	.506	.471	.474	.456
17	.449	.495	.495	.531	.495	.528	.517	.470	.473	.455
18	.446	.487	.495	.526	.500	.514	.509	.471	.467	.453
19	.448	.452	.483	.529	.517	.514	.518	.486	.460	.452
20	.442	.461	.464	.534	.496	.511	.522	.483	.462	.429
21	.452	.490	.475	.535	.474	.501	.504	.475	.460	.430
22	.481	.474	.469	.516	.494	.495	.515	.476	.467	.472
23	.461	.472	.467	.506	.436	.488	.470	.450	.465	.464
24	.448	.467	.444	.498	.484	.467	.487	.444	.456	.472
25	.444	.464	.474	.496	.501	.479	.483	.454	.462	.466
26	.479	.482	.497	.469	.475	.493	.466	.453	.466	.483
27	.441	.500	.478	.464	.476	.495	.493	.457	.478	.467
28	.446	.463	.493	.480	.480	.481	.491	.432	.469	.472
29	.462	.464	.474	.499	.483	.504	.488	.449	.497	.473
30	.487	.481	.487	.502	.481	.513	.483	.450	.471	.451
31	.456	.482	.500	.497	.485	.489	.465	.454	.478	.470
32	.446	.491	.509	.521	.485	.501	.462	.440	.491	.447
33	.432	.465	.496	.531	.481	.478	.470	.434	.475	.466
34	.431	.496	.478	.510	.476	.501	.480	.442	.471	.468
35	.458	.456	.500	.481	.471	.495	.469	.440	.449	.432
36	.437	.484	.472	.490	.500	.457	.476	.442	.440	.438
37	.453	.438	.467	.502	.485	.479	.455	.418	.448	.444
38	.458	.474	.483	.492	.439	.483	.453	.447	.447	.427
39	475	.477	.460	.501	.479	.483	.477	.462	.434	.448
40	.472	.481	.447	.508	.484	.472	.461	.442	.454	.451
41	.458	.491	.460	.480	.486	.481	.467	.459	.465	.431
42	.440	.505	.462	.492	.485	.485	.455	.460	.454	.444
43	.460	.448	.474	.475	.489	.485	.456	.455	.444	.460
44	.449	.437	.456	.467	.498	.473	.475	.443	.460	.451
45	.429	.445	.457	.486	.504	.466	.464	.435	.429	.465
46	.427	.444	.464	.488	.467	.489	.458	.409	.410	.432
47	.433	.449	.468	.466	.495	.494	.460	.411	.418	.427
48	.420	.478	.442	.475	.488	.485	.443	.422	.428	.448
49	.438	.466	.477	.473	.478	.489	.326	.421	.452	.446
50	.454	.481	.502	.470	.456	.492	.454	.420	.470	.437
51	.433	.464	.495	.459	.452	.484	.440	.418	.450	.441
52	.415	.461	.472	.456	.481	.492	.475	.436	.454	.425
53	.411	.476	.463	.452	.475	.466	.460	.434	.437	.434
54	.417	.473	.449	.473	.475	.476	.431	.437	.438	.428
55	.408	.457	.465	.479	.455	.464	.446	.438	.437	.431
56	.397	.462	.470	.471	.470	.465	.445	.430	.443	.424
57	.426	.477	.499	.484	.470	.469	.454	.445	.418	.414
58	.427	.489	.517	.500	.455	.460	.465	.434	.423	.410
59	.425	.497	.488	.469	.475	.469	.467	.434	.419	.437
60	.444	.470	.502	.481	.469	.463	.458	.442	.411	.398

Run No. 53 ; u component

	Separation Distance (m.)									
K	1	4	7	16	20	21	64	80	84	85
00	.284	.287	.256	.234	.283	.242	.320	.369	.236	.314
01	.234	.282	.266	.239	.250	.255	.306	.362	.279	.291
02	.280	.312	.339	.262	.257	.256	.280	.335	.287	.256
03	.298	.319	.289	.285	.249	.246	.324	.327	.295	.288
04	.288	.317	.262	.314	.256	.263	.292	.316	.276	.305
05	.269	.341	.307	.278	.268	.283	.307	.299	.301	.317
06	.259	.317	.316	.306	.247	.284	.317	.271	.276	.301
07	.241	.276	.294	.279	.239	.283	.298	.289	.285	.308
08	.283	.218	.311	.301	.225	.269	.287	.283	.296	.307
09	.344	.220	.296	.276	.233	.285	.277	.315	.307	.316
10	.327	.208	.305	.259	.231	.283	.280	.320	.302	.290
11	.297	.244	.303	.262	.237	.259	.277	.378	.273	.284
12	.276	.270	.309	.255	.257	.280	.276	.352	.305	.309
13	.281	.260	.301	.283	.257	.294	.307	.341	.320	.305
14	.273	.272	.305	.318	.290	.334	.287	.320	.312	.275
15	.266	.310	.316	.302	.282	.338	.279	.307	.304	.275
16	.255	.323	.309	.316	.230	.320	.289	.306	.276	.293
17	.238	.299	.311	.302	.219	.288	249	.308	.271	.287
18	.226	.282	.318	.304	.249	.244	.249	.319	.296	.285
19	.246	.252	.296	.278	.304	.225	.256	.312	.285	.292
20	.237	.236	.288	.259	.296	.213	.278	.311	.263	.321
21	.222	.278	.276	.265	.305	.218	.284	.314	.253	.328
22	.254	.317	.262	.278	.246	.196	.307	.326	.262	.301
23	.247	.292	.291	.274	.249	.218	.304	.337	.276	.302
24	.271	.298	.302	.278	.246	.280	.301	.311	.281	.336
25	.251	.324	.324	.299	.258	.278	.293	.283	.312	.359
26	.294	.307	.309	.278	.237	.296	.283	.294	.333	.337
27	.277	.302	.284	.259	.209	.272	.267	.323	.311	.329
28	.290	.358	.268	.260	.195	.250	.237	.314	.290	.342
29	.316	.333	.258	.256	.193	.278	.294	.324	.291	.309
30	.312	.311	.276	.219	.198	.290	.310	.313	.283	.290
31	.262	.315	.294	.202	.229	.244	.325	.305	.287	.292
32	.271	.302	.309	.235	.210	.226	.301	.306	.286	.318
33	.262	.298	.280	.252	.204	.256	.292	.288	.285	.293
34	.259	.286	.283	.231	.226	.286	.308	.301	.297	.270
35	.272	.261	.283	.232	.232	.261	.270	.343	.310	.291
36	.271	.255	.267	.265	.214	.225	.285	.322	.299	.322
37	.263	.263	.238	.272	.196	.244	.280	.321	.288	.326
38	.237	.273	.251	.249	.247	.264	.305	.328	.282	.315
39	.249	.243	.230	.237	.287	.266	.281	.328	.315	.338
40	.260	.263	.237	.221	.268	.245	.251	.354	.275	.315
41	.280	.272	.249	.250	.268	.218	.263	.291	.295	.280
42	.290	.232	.248	.246	.230	.187	.308	.299	.302	.271
43	.285	.257	.240	.241	.224	.247	.332	.302	.264	.311
44	.292	.229	.233	.253	.237	.268	.323	.291	.287	.313
45	.235	.192	.231	.262	.224	.282	.310	.266	.310	.306
46	.216	.166	.252	.257	.239	.286	.313	.277	.311	.323
47	.248	.214	.290	.253	.225	.251	.277	.298	.298	.324
48	.253	.244	.299	.235	.231	.242	.282	.323	.258	.328
49	.279	.247	.349	.235	.243	.268	.298	.374	.270	.343
50	.278	.235	.319	.239	.245	.279	.305	.374	.293	.322
51	.249	.209	.254	.257	.206	.286	.303	.371	.298	.318
52	.262	.199	.244	.279	.239	.260	.324	.355	.309	.292
53	.260	.223	.242	.220	.256	.281	.348	.319	.285	.286
54	.231	.261	.261	.215	.250	.226	.368	.336	.305	.280
55	.175	.313	.220	.216	.255	.249	.348	.314	.345	.274
56	.224	.314	.252	.217	.286	.251	.329	.290	.325	.271
57	.260	.281	.297	.242	.273	.224	.308	.293	.308	.270
58	.209	.273	.315	.253	.234	.259	.312	.304	.302	.277
59	.200	.233	.290	.190	.276	.231	.324	.292	.297	.290
60	.230	.218	.267	.196	-.112,-1	.221	.319	.341	.284	.309

Run No. 53 ; v component

	Separation Distance (m.)									
K	1	4	5	16	20	21	64	80	84	85
00	.682	.401	.404	.427	.393	.352	.333	.235	.271	.247
01	.409	.402	.418	.411	.463	.379	.314	.310	.243	.265
02	.354	.441	.407	.469	.436	.382	.316	.288	.236	.242
03	.353	.429	.387	.450	.393	.369	.342	.247	.268	.212
04	.340	.420	.409	.428	.416	.381	.341	.250	.270	.258
05	.406	.403	.384	.434	.427	.383	.323	.238	.248	.219
06	.355	.358	.363	.443	.406	.380	.296	.238	.278	.204
07	.367	.411	.377	.467	.396	.367	.301	.262	.222	.176
08	.385	.387	.333	.454	.413	.355	.287	.279	.265	.262
09	.326	.339	.319	.391	.404	.375	.289	.249	.277	.238
10	.350	.361	.339	.396	.490	.420	.337	.269	.254	.255
11	.317	.341	.337	.416	.428	.412	.338	.289	.226	.272
12	.317	.366	.368	.458	.435	.405	.349	.276	.275	.207
13	.302	.350	.308	.421	.413	.381	.304	.286	.274	.262
14	.339	.335	.318	.427	.352	.366	.320	.296	.305	.272
15	.310	.326	.315	.387	.391	.349	.334	.266	.323	.274
16	.341	.371	.311	.384	.411	.380	.318	.279	.234	.228
17	.324	.330	.309	.398	.392	.368	.280	.270	.261	.242
18	.274	.318	.319	.366	.371	.387	.309	.327	.253	.242
19	.279	.299	.305	.380	.341	.298	.331	.278	.223	.253
20	.265	.328	.306	.385	.388	.330	.297	.257	.285	.269
21	.270	.370	.350	.395	.371	.371	.274	.260	.235	.238
22	.322	.335	.241	.397	.365	.350	.332	.310	.287	.305
23	.269	.308	.262	.425	.387	.387	.292	.289	.318	.305
24	.330	.306	.308	.411	.357	.342	.305	.298	.261	.257
25	.255	.314	.305	.392	.381	.344	.326	.282	.268	.254
26	.309	.327	.307	.366	.375	.326	.355	.264	.284	.240
27	.314	.343	.302	.398	.350	.348	.312	.263	.263	.228
28	.323	.348	.338	.387	.405	.343	.304	.292	.266	.241
29	.305	.337	.323	.383	.377	.316	.361	.277	.297	.252
30	.321	.346	.305	.345	.368	.351	.340	.253	.276	.209
31	.277	.350	.318	.371	.342	.356	.317	.279	.240	.193
32	.269	.361	.346	.391	.379	.390	.288	.287	.249	.261
33	.320	.351	.333	.375	.394	.365	.305	.263	.255	.264
34	.313	.305	.282	.413	.409	.362	.299	.295	.271	.280
35	.282	.356	.327	.384	.405	.337	.301	.317	.280	.217
36	.257	.323	.284	.364	.378	.326	.283	.276	.276	.259
37	.298	.324	.279	.393	.334	.335	.283	.274	.240	.249
38	.320	.346	.317	.381	.373	.347	.287	.276	.240	.244
39	.326	.333	.285	.378	.399	.363	.307	.304	.270	.262
40	.296	.3[illegible]	.321	.384	.399	.355	.307	.241	.239	.216
41	.304	.331	.285	.376	.375	.354	.315	.271	.230	.221
42	.295	.365	.294	.387	.376	.341	.329	.224	.285	.299
43	.295	.351	.314	.401	.365	.327	.328	.286	.263	.261
44	.269	.349	.333	.391	.381	.324	.314	.210	.278	.255
45	.285	.326	.321	.368	.367	.309	.298	.242	.241	.233
46	.274	.320	.261	.406	.406	.323	.288	.273	.253	.240
47	.239	.348	.315	.368	.391	.372	.264	.273	.228	.215
48	.302	.313	.310	.377	.350	.330	.293	.239	.235	.213
49	.290	.338	.281	.388	.397	.342	.327	.232	.253	.212
50	.249	.345	.314	.395	.405	.379	.323	.251	.273	.216
51	.285	.286	.265	.401	.384	.341	.294	.265	.283	.271
52	.274	.320	.258	.395	.371	.335	.287	.250	.283	.260
53	.292	.328	.278	.396	.376	.366	.291	.259	.260	.227
54	.250	.301	.281	.352	.375	.322	.314	.253	.275	.219
55	.195	.319	.283	.341	.399	.349	.324	.332	.253	.237
56	.286	.312	.298	.358	.355	.334	.265	.288	.265	.297
57	.234	.277	.247	.369	.352	.314	.265	.302	.290	.262
58	.238	.289	.249	.358	.347	.300	.311	.250	.254	.233
59	.240	.300	.278	.357	.318	.281	.261	.227	.256	.219
60	.222	.314	.283	.356	.339	.335	.269	.248	.239	.212

Run No. 54 ; u component

Separation Distance (m.)

K	6	12	18	24	36	42	48	72	84	90
00	.164	.958,-1	.113	.908,-1	.556,-1	.108	.114	.965,-1	.885,-1	.120
01	.195	.100	.934,-1	.962,-1	.879,-1	.124	.128	.109	.879,-1	.128
02	.204	.108	.113	.505,-1	.712,-1	.122	.126	.107	.978,-1	.130
03	.213	.888,-1	.122	.573,-1	.695,-1	.969,-1	.113	.959,-1	.953,-1	.136
04	.221	.118	.112	.376,-1	.654,-1	.837,-1	.125	.979,-1	.508,-1	.127
05	.193	.150	.952,-1	.192,-1	.633,-1	.945,-1	.991,-1	.524,-1	.702,-1	.147
06	.175	.128	.854,-1	.479,-2	.515,-1	.905,-1	.101	.614,-1	.547,-1	.152
07	.184	.148	.745,-1	.132,-1	.737,-1	.117	.125	.744,-1	.705,-1	.157
08	.156	.147	.569,-1	.671,-2	.817,-1	.117	.143	.382,-1	.547,-1	.155
09	.180	.126	.313,-1	-.177,-1	.856,-1	.916,-1	.128	.909,-1	.782,-1	.135
10	.174	.139	.572,-1	-.455,-2	.945,-1	.946,-1	.115	.739,-1	.948,-1	.129
11	.142	.147	.805,-1	.360,-2	.106	.115	.113	.743,-1	.121	.134
12	.128	.118	.849,-1	.199,-1	.110	.110	.110	.534,-1	.972,-1	.112
13	.105	.117	.637,-1	.352,-1	.109	.109	.152	.466,-1	.897,-1	.117
14	.953,-1	.117	.786,-1	.371,-1	.991,-1	.106	.156	.258,-1	.106	.940,-1
15	.794,-1	.123	.902,-1	.439,-1	.806,-1	.829,-1	.163	.204,-1	.840,-1	.101
16	.930,-1	.132	.107	.613,-1	.876,-1	.882,-1	.144	.133,-1	.768,-2	.105
17	.116	.102	.113	.436,-1	.736,-1	.936,-1	.133	.665,-2	.862,-1	.110
18	.112	.132	.118	.304,-1	.917,-1	.924,-1	.117	-.375,-2	.789,-1	.158
19	.112	.133	.116	.336,-1	.110	.759,-1	.129	.263,-2	.109	.167
20	.139	.149	.911,-1	.395,-1	.149	.868,-1	.130	.164,-1	.126	.153
21	.126	.143	.694,-1	.563,-1	.107	.103	.121	.830,-2	.119	.122
22	.971,-1	.128	.594,-1	.544,-1	.126	.115	.123	.124,-2	.133	.106
23	.675,-1	.130	.328,-1	.534,-1	.130	.853,-1	.109	-.133,-2	.836,-1	.591,-1
24	.699,-1	.107	.291,-1	.700,-1	.959,-1	.712,-1	.127	.118,-3	.110	.437,-1
25	.558,-1	.934,-1	.499,-1	.705,-1	.785,-1	.394,-1	.146	-.390,-2	.107	.404,-1
26	.603,-1	.806,-1	.765,-1	.558,-1	.597,-1	.487,-1	.169	.164,-1	.121	.812,-1
27	.483,-1	.950,-1	.850,-1	.446,-1	.428,-1	.679,-1	.162	.147,-1	.104	.101
28	.440,-1	.117	.890,-1	.232,-1	.649,-1	.697,-1	.147	.317,-1	.105	.975,-1
29	.698,-1	.137	.815,-1	.355,-1	.905,-1	.621,-1	.131	.395,-1	.895,-1	.135
30	.704,-1	.132	.639,-1	.499,-1	.868,-1	.604,-1	.104	.738,-1	.107	.153
31	.786,-1	.155	.787,-1	.312,-1	.512,-1	.627,-1	.914,-1	.101	.115	.178
32	.650,-1	.153	.818,-1	.137,-1	.491,-1	.734,-1	.592,-1	.115	.869,-1	.159
33	.498,-1	.126	.769,-1	.479,-2	.430,-1	.598,-1	.611,-1	.114	.556,-1	.160
34	.495,-1	.123	.522,-1	.187,-1	.692,-1	.549,-1	.555,-1	.969,-1	.292,-1	.146
35	.480,-1	.103	.530,-1	-.695,-2	.110	.569,-1	.637,-1	.969,-1	.513,-1	.124
36	.106,-1	.979,-1	.483,-1	.719,-2	.104	.691,-1	.471,-1	.129	.629,-1	.982,-1
37	.329,-1	.992,-1	.853,-1	-.199,-1	.121	.748,-1	.725,-1	.138	.742,-1	.742,-1
38	.136,-1	.865,-1	.734,-1	-.105,-1	.100	.963,-1	.456,-1	.134	.719,-1	.294,-1
39	.316,-1	.920,-1	.600,-1	.435,-2	.114	.119	.416,-1	.935,-1	.548,-1	-.807,-2
40	.197,-1	.667,-1	.865,-1	.156,-1	.139	.174	.644,-1	.826,-1	.746,-1	-.885,-2
41	.356,-1	.753,-1	.115	.158,-1	.170	.186	.559,-1	.853,-1	.990,-1	-.651,-2
42	.678,-1	.744,-1	.135	.312,-1	.118	.173	.649,-1	.894,-1	.125	.359,-1
43	.129	.111	.136	.242,-1	.120	.163	.954,-1	.651,-1	.952,-1	.528,-1
44	.140	.126	.142	.168,-2	.158	.159	.119	.572,-1	.851,-1	.952,-1
45	.157	.123	.164	.127,-1	.163	.163	.885,-1	.674,-1	.701,-1	.125
46	.149	.111	.176	.168,-1	.180	.171	.802,-1	.628,-1	.751,-1	.143
47	.123	.119	.175	.113,-1	.191	.176	.628,-1	.439,-1	.773,-1	.141
48	.117	.131	.170	.286,-1	.186	.145	.710,-1	.466,-1	.662,-1	.163
49	.106	.115	.182	.644,-1	.173	.137	.737,-1	.675,-1	.530,-1	.155
50	.105	.139	.217	.568,-1	.174	.151	.578,-1	.787,-1	.494,-1	.981,-1
51	.682,-1	.135	.217	.575,-1	.171	.152	.623,-1	.697,-1	.645,-1	.102
52	.869,-1	.129	.183	.655,-1	.161	.170	.713,-1	.619,-1	.685,-1	.106
53	.634,-1	.110	.166	.750,-1	.157	.187	.615,-1	.501,-1	.816,-1	.863,-1
54	.838,-1	.113	.173	.750,-1	.137	.192	.705,-1	.276,-1	.589,-1	.108
55	.101	.945,-1	.158	.827,-1	.117	.196	.770,-1	.592,-1	.594,-1	.127
56	.138	.132	.137	.108	.082,-1	.197	.819,-1	.857,-1	.477,-1	.106
57	.164	.901,-1	.150	.107	.865,-1	.210	.555,-1	.974,-1	.652,-1	.110
58	.192	.802,-1	.142	.106	.940,-1	.177	.344,-1	.123	.659,-1	.963,-1
59	.194	.565,-1	.105	.147	.121	.164	.386,-1	.122	.679,-1	.106
60	.166	.107	.106	.164	.108	.143	.256,-1	.130	.695,-1	.105

Run No. 54 ; v component

Separation Distance (r.)

K	6	12	18	24	36	42	48	72	84	90
00	.272	.133	.954,-1	.158	.113	.125	.581,-1	.925,-1	.809,-1	.659,-1
01	.217	.139	.937,-1	.140	.642,-1	.116	.656,-1	.131	.701,-1	.113
02	.147	.117	.524,-1	.109	.490,-1	.989,-1	.502,-1	.142	.915,-1	.995,-1
03	.144	.822,-1	.563,-1	.124	.691,-1	.886,-1	.555,-1	.862,-1	.103	.126
04	.145	.831,-1	.959,-1	.123	.748,-1	.296,-1	.626,-1	.808,-1	.116	.107
05	.101	.736,-1	.771,-1	.739,-1	.772,-1	.375,-1	.242,-1	.106	.949,-1	.108
06	.524,-1	.810,-1	.750,-1	.127	.976,-1	.993,-1	.782,-1	.621,-1	.779,-1	.150
07	.537,-1	.982,-1	.110	.132	.108	.710,-1	.941,-1	.777,-1	.131	.116
08	.472,-1	.803,-1	.921,-1	.101	.955,-1	.792,-1	.134	.807,-1	.105	.982,-1
09	.984,-1	.609,-1	.810,-1	.128	.565,-1	.827,-1	.112	.661,-1	.952,-1	.968,-1
10	.752,-1	.979,-1	.116	.112	.751,-1	.818,-1	.831,-1	.681,-1	.956,-1	.988,-1
11	.775,-1	.579,-1	.940,-1	.921,-1	.112	.917,-1	.103	.713,-1	.131	.873,-1
12	.102	.613,-1	.603,-1	.878,-1	.123	.654,-1	.864,-1	.916,-1	.935,-1	.604,-1
13	.590,-1	.658,-1	.492,-1	.110	.115	.890,-1	.962,-1	.739,-1	.973,-1	.975,-1
14	.903,-1	.707,-1	.934,-1	.124	.947,-1	.594,-1	.926,-1	.623,-1	.116	.789,-1
15	.138	.765,-1	.932,-1	.120	.129	.818,-1	.118	.960,-1	.400,-1	.101
16	.945,-1	.517,-1	.891,-1	.892,-1	.100	.258,-1	.502,-1	.771,-1	.65,,-1	.774,-1
17	.103	.103	.112	.801,-1	.743,-1	.910,-1	.784,-1	.662,-1	.957,-1	.992,-1
18	.804,-1	.116	.106	.979,-1	.679,-1	.103	.812,-1	.405,-1	.957,-1	.646,-1
19	.900,-1	.855,-1	.539,-1	.123	.107	.973,-1	.105	.110	.122	.339,-1
20	.105	.102	.742,-1	.821,-1	.118	.991,-1	.940,-1	.101	.149	.936,-1
21	.438,-1	.726,-1	.580,-1	.102	.140	.989,-1	.610,-1	.876,-1	.151	.510,-1
22	.431,-1	.841,-1	.623,-1	.934,-1	.150	.157	.659,-1	.101	.598,-1	.504,-1
23	.307,-1	.699,-1	.997,-1	.959,-1	.137	.174	.856,-1	.859,-1	.710,-1	.466,-1
24	.375,-1	.108	.399,-1	.106	.134	.141	.108	.896,-1	.724,-1	.373,-1
25	.374,-1	.104	.501,-1	.120	.691,-2	.941,-1	.666,-1	.850,-1	.712,-1	.368,-1
26	.170,-1	.138	.111	.125	.137	.102	.346,-1	.137	.685,-1	.594,-1
27	.901,-1	.963,-1	.106	.109	.119	.910,-1	.371,-1	.108	.999,-1	.193,-1
28	.101	.825,-1	.565,-1	.722,-1	.881,-1	.376,-1	.388,-1	.131	.668,-1	.154,-1
29	.996,-1	.111	.469,-1	.111	.137	.967,-1	.828,-1	.114	.103	.524,-1
30	.895,-1	.926,-1	.291,-1	.110	.121	.793,-1	.105	.134	.157	.779,-1
31	.943,-1	.851,-1	.564,-1	.126	.151	.682,-1	.119	.936,-1	.711,-1	.385,-1
32	.862,-1	.804,-1	.831,-1	.968,-1	.120	.600,-1	.108	.116	.525,-1	.849,-1
33	.114	.750,-1	.672,-1	.798,-1	.720,-1	.102	.142	.111	.111	.670,-1
34	.557,-1	.576,-1	.775,-1	.536,-1	.694,-1	.751,-1	.707,-1	.877,-1	.470,-1	.526,-1
35	.589,-1	.388,-1	.871,-1	.725,-1	.498,-1	.545,-1	.918,-1	.113	.131	.963,-1
36	.118	.504,-1	.203,-1	.116	.661,-1	.707,-1	.107	.953,-1	.107	.115
37	.109	.609,-1	.473,-1	.834,-1	.618,-1	.338,-1	.147	.513,-1	.674,-1	.164
38	.502,-1	.659,-1	.640,-1	.101	.761,-1	.580,-1	.157	.717,-1	.854,-1	.824,-1
39	.803,-1	.746,-1	.115	.297,-1	.119	.637,-1	.139	.562,-1	.807,-1	.103
40	.601,-1	.881,-1	.108	.349,-1	.101	.170,-1	.416,-1	.955,-1	.827,-1	.105
41	.360,-1	.138	.930,-1	.519,-1	.807,-1	.803,-1	.427,-1	.449,-1	.759,-1	.960,-1
42	.698,-1	.105	.673,-1	.814,-1	.693,-1	.155,-1	.239,-1	.103	.101	.845,-1
43	.581,-1	.836,-1	.219,-1	.813,-1	.967,-1	.819,-1	.692,-1	.681,-1	.846,-1	.739,-1
44	.123	.838,-1	.662,-1	.968,-1	.104	.668,-1	.975,-1	.129	.892,-1	.732,-1
45	.136	.616,-1	.725,-1	.105	.140	.929,-1	.130	.117	.656,-1	.824,-1
46	.120	.753,-1	.813,-1	.668,-1	.100	.379,-1	.878,-1	.118	.681,-1	.954,-1
47	.971,-1	.507,-1	.357,-1	.122	.659,-1	.715,-1	.808,-1	.751,-1	.641,-1	.105
48	.927,-1	.123	.587,-1	.930,-1	.716,-1	.887,-1	.849,-1	.477,-1	.905,-1	.576,-1
49	.751,-1	.121	.670,-1	.108	.602,-1	.128	.762,-1	.919,-1	.938,-1	.405,-1
50	.828,-1	.864,-1	.726,-1	.685,-1	.843,-1	.120	.121	.689,-1	.841,-1	.661,-1
51	.675,-1	.370,-1	.835,-1	.103	.104	.658,-1	.102	.597,-1	.706,-1	.549,-1
52	.399,-1	.848,-1	.914,-1	.132	.108	.942,-1	.415,-1	.732,-1	.759,-1	.857,-1
53	.413,-1	.101	.904,-1	.953,-1	.127	.561,-1	.639,-1	.746,-1	.157	.108
54	.822,-1	.669,-1	.823,-1	.121	.682,-1	.111	.279,-1	.734,-1	.136	.789,-1
55	.111	.939,-1	.113	.115	.142	.966,-1	.466,-1	.117	.107	.810,-1
56	.107	.111	.875,-1	.104	.843,-1	.146	.684,-1	.117	.161	.110
57	.908,-1	.914,-1	.112	.893,-1	.545,-1	.152	.108	.101	.102	.978,-1
58	.135	.129	.749,-1	.560,-1	.878,-1	.117	.896,-1	.705,-1	.107	.622,-1
59	.138	.115	.128	.102	.781,-1	.131	.877,-1	446,-1	.113	.105
60	.154	.118	.154	.100	.637,-1	.631,-1	.140	.128	.769,-1	.101

Run No. 55 ; u component

	Separation Distance (n.)									
K	6	12	18	24	36	42	48	72	84	96
00	.475	.284	.234	.169	.926,-1	-.476,-2	.174	.126	.908,-3	.782,-1
01	.425	.238	.225	.153	.771,-1	-.171,-1	.131	.969,-1	.470,-1	.942,-1
02	.360	.276	.215	.140	.473,-1	.331,-2	.1[illegible]	.104	.678,-1	.899,-1
03	.315	.243	.209	.133	.422,-1	-.236,-1	.982,-1	.957,-1	.939,-1	.765,-1
04	.264	.241	.195	.118	.324,-1	-.620,-1	.835,-1	.106	.106	.753,-1
05	.238	.227	.149	.106	.380,-1	-.670,-1	.947,-1	.102	.133	.797,-1
06	.229	.203	.150	.103	.317,-1	-.714,-1	.265,-1	.103	.129	.696,-1
07	.200	.198	.136	.112	.180,-1	-.531,-1	.000	.107	.105	.679,-1
08	.159	.195	.129	.123	-.239,-2	-.563,-1	-.325,-1	.147	.782,-1	.654,-1
09	.161	.175	.936,-1	.139	.156,-1	-.424,-1	-.380,-1	.156	.852,-1	.684,-1
10	.149	.151	.668,-1	.124	.294,-1	-.266,-1	-.449,-1	.121	.747,-1	.821,-1
11	.141	.123	.251,-1	.104,-1	.251,-1	-.229,-1	-.522,-1	.116	.809,-1	.885,-1
12	.106	.103	-.579,-2	.970,-1	.304,-1	-.471,-1	-.701,-1	.136	.837,-1	.838,-1
13	.896,-1	.994,-1	-.274,-1	.981,-1	.188,-1	-.227,-1	-.711,-1	.156	.886,-1	.903,-1
14	.772,-1	.884,-1	-.354,-1	.834,-1	.559,-2	.146,-1	-.474,-1	.158	.119	.111
15	.636,-1	.841,-1	-.602,-1	.713,-1	.325,-2	.268,-1	-.318,-1	.161	.922,-1	.139
16	.356,-1	.406,-1	-.730,-1	.739,-1	-.751,-3	.539,-1	-.140,-2	.165	.963,-1	.136
17	.282,-1	.256,-1	-.694,-1	.725,-1	.367,-2	.543,-1	-.147,-1	.167	.122	.132
18	.423,-1	.470,-2	-.531,-1	.741,-1	.339,-2	.576,-1	-.397,-1	.148	.148	.130
19	.241,-1	-.240,-1	-.566,-1	.647,-1	.167,-2	.606,-1	-.640,-1	.134	.151	.108
20	.143,-2	-.241,-1	-.666,-1	.508,-1	-.317,-2	.679,-1	-.481,-1	.120	.109	.863,-1
21	.134,-3	-.347,-1	-.694,-1	.832,-1	-.141,-1	.386,-1	-.139,-1	.118	.973,-1	.685,-1
22	-.349,-2	-.414,-1	-.617,-1	.903,-1	.129,-1	.443,-1	-.132,-1	.109	.806,-1	.769,-1
23	.161,-2	-.528,-1	-.665,-1	.830,-1	.116,-1	.398,-1	-.398,-2	.132	.966,-1	.820,-1
24	-.693,-2	-.665,-1	-.577,-1	.942,-1	-.109,-1	.283,-1	.302,-1	.142	.881,-1	.782,-1
25	-.824,-2	-.713,-1	-.570,-1	.117	-.322,-1	-.498,-2	.427,-1	.146	.100	.595,-1
26	-.154,-1	-.693,-1	-.537,-1	.128	-.380,-1	.143,-2	.521,-1	.121	.121	.511,-1
27	-.278,-1	-.599,-1	-.384,-1	.129	-.409,-1	-.241,-1	.587,-1	.130	.104	.291,-1
28	-.700,-1	-.507,-1	-.388,-1	.146	-.466,-1	-.576,-1	.716,-1	.129	.853,-1	.183,-1
29	-.715,-1	-.336,-1	-.397,-1	.148	-.355,-1	-.503,-1	.666,-1	.114	.680,-1	-.818,-3
30	-.761,-1	-.363,-1	-.574,-1	.158	-.229,-1	-.788,-1	.704,-1	.112	.395,-1	-.644,-2
31	-.713,-1	-.431,-1	-.606,-1	.152	-.319,-1	-.947,-1	.651,-1	.108	.322,-1	-.900,-2
32	-.650,-1	-.663,-1	-.720,-1	.127	-.251,-1	-.102	.842,-1	.974,-1	.309,-1	-.155,-1
33	-.474,-1	-.634,-1	-.664,-1	.115	-.490,-1	-.809,-1	.116	.741,-1	.338,-1	-.252,-1
34	-.487,-1	-.316,-1	-.416,-1	.107	-.583,-1	-.829,-1	.982,-1	.516,-1	.300,-1	-.490,-1
35	-.671,-1	-.225,-1	-.263,-1	.101	-.764,-1	-.585,-1	.982,-1	.490,-1	.823,-2	-.311,-1
36	-.409,-1	-.819,-2	-.184,-1	.120	-.774,-1	-.390,-1	.927,-1	.684,-1	-.196,-1	-.365,-1
37	-.309,-1	.173,-1	-.527,-3	.973,-1	-.875,-1	-.585,-2	.875,-1	.721,-1	-.528,-2	-.276,-1
38	-.205,-1	.849,-2	.424,-1	.681,-1	-.807,-1	-.854,-2	.636,-1	.434,-1	-.132,-1	-.120,-1
39	-.245,-1	.153,-1	.566,-1	.527,-1	-.987,-1	-.390,-1	.463,-1	.381,-1	-.172,-1	.788,-2
40	-.553,-1	.302,-1	.641,-1	.440,-1	-.915,-1	-.510,-1	.335,-1	.327,-1	-1	.145,-1
41	-.537,-1	.579,-1	.500,-1	.359,-1	-.813,-1	-.460,-1	.392,-1	.524,-1	, 2	.409,-3
42	-.259,-1	.491,-1	.295,-1	.196,-1	-.817,-1	-.486,-1	.496,-1	.511,-1	.342,-2	.121,-1
43	-.265,-1	.366,-1	.322,-1	.173,-1	-.104	-.519,-1	.767,-1	.670,-1	.278,-1	.296,-1
44	-.433,-1	.345,-1	.420,-1	.483,-2	-.973,-1	-.637,-1	.523,-1	.685,-1	.533,-1	.186,-1
45	-.397,-1	.235,-1	.387,-1	-.197,-1	-.113	-.995,-1	.575,-1	.871,-1	.643,-1	-.624,-2
46	-.458,-1	.456,-2	.423,-1	-.494,-1	-.109	-.125	.722,-1	.856,-1	.633,-1	.767,-2
47	-.412,-1	.130,-1	.693,-1	-.404,-1	-.138	-.118	.784,-1	.550,-1	.596,-1	.869,-2
48	-.238,-1	.504,-1	.555,-1	-.532,-1	-.150	-.138	.904,-1	.372,-1	.353,-1	.266,-2
49	-.199,-1	.388,-1	.494,-1	-.508,-1	-.154	-.138	.904,-1	.576,-1	.414,-1	.460,-2
50	-.423,-1	.498,-1	.553,-1	-.530,-1	-.143	-.135	.108	.829,-1	.652,-1	.269,-1
51	-.433,-1	.748,-1	.693,-1	-.630,-1	-.131	-.135	.931,-1	.803,-1	.631,-1	.457,-1
52	-.361,-1	.628,-1	.911,-1	-.723,-1	-.100	-.143	.764,-1	.831,-1	.519,-1	.638,-1
53	-.325,-1	.745,-1	.107	-.761,-1	-.105	-.139	.520,-1	.698,-1	.750,-1	.724,-1
54	-.258,-1	.604,-1	.116	-.392,-1	-.917,-1	-.125	.226,-1	.852,-1	.624,-1	.725,-1
55	-.463,-1	.694,-1	.108	-.304,-1	-.354,-1	-.110	.103,-1	.939,-1	.384,-1	.723,-1
56	-.208,-1	.702,-1	.998,-1	-.467,-1	-.753,-1	-.930,-1	-.158,-1	.947,-1	.305,-1	.701,-1
57	-.242,-1	.491,-1	.737,-1	-.433,-1	-.669,-1	-.900,-1	-.342,-1	.826,-1	.352,-1	.474,-1
58	-.185,-1	.235,-1	.645,-1	-.193,-1	-.761,-1	-.713,-1	-.443,-1	.938,-1	.261,-1	.300,-1
59	-.142,-1	.237,-1	.471,-1	-.201,-1	-.801,-1	-.539,-1	-.359,-1	.959,-1	.222,-1	.307,-1
60	.429,-2	.259,-1	.634,-1	-.128,-1	-.489,-1	-.294,-1	-.264,	.107	.768,-2	.322,-1

Run No. 55 ; v component

Separation Distance (m.)

K	6	12	18	24	36	42	48	72	84	90
00	.431	.496	.354	.617,-1	.674,-1	.189,-1	.122	.128	.845,-1	.393,-1
01	.284	.226	.222	.573,-1	.441,-1	.614,-1	.116	.999,-1	.918,-1	.573,-1
02	.148	.170	.138	.585,-1	.572,-1	.696,-1	.144	.872,-1	.453,-1	.139,-1
03	.889,-1	.131	.926,-1	.850,-1	.486,-1	.444,-1	.126	.250,-1	.116,-1	.101,-1
04	.793,-1	.771,-1	.855,-1	.804,-1	.681,-1	.521,-1	.112	.371,-1	.802,-1	.676,-1
05	.771,-1	.786,-1	.801,-1	.875,-1	.680,-1	.686,-1	.117	.676,-1	.579,-1	.936,-1
06	.882,-1	.685,-1	.127	.716,-1	.796,-1	.562,-1	.100	.802,-1	.316,-1	.666,-1
07	.104	.674,-1	.765,-1	.917,-1	.110	.106	.987,-1	.571,-1	.421,-1	.342,-1
08	.647,-1	.319,-1	.754,-1	.130	.106	.119	.946,-1	.481,-1	.346,-1	-.117,-1
09	.560,-1	.248,-1	.201,-1	.155	.111	.734,-1	.116	.496,-1	.326,-1	.559,-1
10	.111,-1	.513,-1	.681,-2	.121	.114	.128	.109	.441,-1	-.130,-1	-.152,-1
11	.131,-1	.132,-1	.276,-1	.134	.949,-1	.121	.140	-.244,-1	.103,-1	-.101,-1
12	.526,-1	.712,-2	.160,-1	.121	.111	.121	.715,-1	-.135,-1	-.575,-2	.243,-2
13	-.230,-1	.856,-2	-.279,-2	.119	.164	.138	.555,-1	-.140,-1	-.325,-1	-.117,-1
14	.613,-2	.367,-1	.532,-1	.125	.936,-1	.769,-1	.890,-1	.117,-2	.106,-1	-.565,-2
15	.475,-1	-.136,-1	.133,-1	.120	.519,-1	.135,-1	.665,-1	.219,-1	.161,-1	.380,-1
16	.571,-2	-.892,-2	.204,-3	.668,-1	.781,-1	.758,-1	.884,-1	-.858,-2	-.374,-1	-.125,-1
17	.238,-3	-.102,-1	.392,-1	.942,-1	.953,-1	.809,-1	.850,-1	-.404,-1	-.266,-1	.300,-2
18	.620,-1	.389,-1	.399,-1	.104	.763,-1	.695,-1	.765,-1	.214,-2	-.157,-1	.118,-1
19	.206,-1	.466,-1	.431,-1	.859,-1	.785,-1	.366,-1	.398,-1	-.376,-2	.191,-1	.221,-1
20	.297,-1	.208,-1	.353,-1	.822,-1	.468,-1	.490,-1	.791,-1	.578,-1	.633,-1	.535,-1
21	.113,-2	.247,-1	-.163,-1	.432,-1	.218,-1	.119,-1	.523,-1	.437,-1	.205,-1	.455,-2
22	-.346,-1	.960,-3	.443,-3	.227,-1	.336,-1	.284,-1	.666,-1	.217,-1	.366,-1	.265,-1
23	-.142,-1	.453,-1	.207,-1	.736,-1	.449,-1	.399,-1	.583,-1	.280,-1	.583,-1	.308,-1
24	.409,-1	.415,-1	.408,-1	.112,-1	.374,-1	.286,-1	.575,-1	.378,-1	-.255,-2	.131,-1
25	.385,-1	.547,-1	.327,-1	.564,-1	.496,-1	.415,-1	-.586,-2	-.916,-2	.226,-1	.241,-1
26	.224,-1	.353,-1	.275,-1	.570,-1	.640,-1	.604,-1	-.233,-1	.354,-1	.341,-2	.529,-1
27	.301,-1	.375,-1	.351,-1	.514,-1	.226,-1	.669,-1	.164,-1	.721,-2	.284,-1	.511,-1
28	-.122,-2	.113,-1	-.341,-2	.455,-1	.610,-1	.561,-1	.438,-1	.607,-1	.493,-1	.949,-1
29	-.232,-2	.325,-2	.109,-1	.745,-1	.733,-1	.762,-1	.655,-1	.109,-1	.817,-2	.395,-1
30	.235,-2	-.111,-1	-.766,-2	.937,-1	.877,-1	.104	.328,-1	-.304,-1	.216,-1	.512,-1
31	-.112,-1	-.224,-3	.496,-1	.861,-1	.673,-1	.890,-1	.327,-1	.273,-2	-.647,-2	-.303,-1
32	.486,-1	-.886,-2	.533,-1	.974,-1	.848,-1	.894,-1	.563,-1	-.136,-1	-.367,-1	-.161,-2
33	.910,-1	.220,-1	.109	.814,-1	.329,-1	.661,-1	.287,-1	.367,-1	.503,-1	.461,-1
34	.819,-1	.559,-1	.952,-1	.576,-1	.763,-1	.957,-1	.401,-1	.437,-1	.470,-1	.684,-1
35	.972,-1	.663,-1	.123	.750,-1	.605,-1	.461,-1	.525,-2	.647,-1	.514,-1	.608,-1
36	.770,-1	.261,-1	.661,-2	.618,-1	.113,-1	.717,-1	.367,-1	.383,-1	.216,-1	.412,-1
37	-.940,-2	.110,-1	.344,-1	.681,-1	.352,-1	.106	.545,-1	.682,-2	.477,-1	.448,-1
38	.376,-1	.711,-1	.776,-1	.770,-1	.454,-1	.104	.133,-1	.659,-2	-.173,-1	.183,-1
39	.532,-1	.861,-1	.782,-1	.727,-1	.450,-1	.836,-1	.910,-2	.454,-1	.374,-1	.454,-1
40	.871,-1	.925,-1	.763,-1	.727,-1	.457,-1	.922,-1	.972,-2	.434,-1	.545,-1	.101
41	.631,-1	.692,-1	.528,-1	.344,-1	.339,-1	.104	.350,-1	.681,-1	.542,-1	.497,-1
42	.218,-2	.650,-1	.568,-1	.542,-1	.703,-1	.825,-1	.210,-1	.363,-1	-.511,-3	.677,-1
43	.361,-1	.135,-1	.269,-1	.985,-1	.934,-1	.792,-1	.691,-1	.316,-1	.254,-1	.655,-2
44	-.172,-1	.260,-1	.253,-1	.113	.608,-1	.513,-1	.677,-1	-.273,-2	-.307,-1	-.861,-2
45	.319,-1	.325,-2	.315	.329,-1	.275,-1	.634,-1	.585,-1	-.154,-1	-.209,-1	-.374,-3
46	.347,-1	.173,-1	.316,-1	.675,-1	.828,-1	.915,-1	.408,-1	.780,-2	.385,-1	.331,-1
47	.139,-1	-.114,-1	-.153,-3	.100	.966,-1	.859,-1	.430,-1	.595,-1	.793,-1	.862,-1
48	-.204,-1	.478,-1	.183,-1	.116	.860,-1	.703,-1	.487,-1	.657,-1	.973,-1	.100
49	-.316,-2	-.412,-2	-.151,-1	.827,-1	.860,-1	.720,-1	.404,-1	.106	.111	.777,-1
50	-.892,-4	.256,-1	.292,-1	.111	.819,-1	.989,-1	-.216,-2	.107	.744,-1	.739,-1
51	.231,-1	-.157,-1	.410,-2	.123	.831,-1	.992,-1	.650,-1	.431,-1	.618,-1	.647,-1
52	-.131,-2	.346,-1	.198,-1	.106	.110	.413,-1	.778,-1	.972,-1	.547,-1	.793,-1
53	.233,-1	.182,-1	.305,-1	.118	.117	.803,-1	.745,-1	.677,-1	.312,-1	.102
54	.435,-1	-.270,-1	.384,-1	.113	.954,-1	.381,-1	.305,-1	.649,-1	.648,-1	.960,-1
55	.123,-1	-.109,-1	.947,-2	.915,-1	.113	.556,-1	.535,-1	.889,-1	.550,-1	.109
56	.388,-1	.172,-1	.330,-1	.120	.146	.288,-1	.745,-1	.277,-1	.579,-2	.187,-1
57	.322,-1	.202,-1	.817,-3	.131	.785,-1	.391,-1	.777,-1	-.234,-2	.116,-1	.109,-1
58	.204,-1	-.750,-2	.708,-1	.103	.652,-1	.538,-1	.767,-1	.578,-1	.502,-1	.217,-1
59	.717,-1	.238,-1	.843,-1	.702,-1	.970,-1	.331,-1	.518,-1	.558,-1	.492,-1	.511,-1
60	.673,-1	.230,-1	.532,-1	.196,-1	.282,-1	.389,-1	.122,-1	.788,-1	.746,-1	.485,-1

Run No. 56 ; u component

K	Separation Distance (m.)									
	1	4	5	16	20	21	64	80	84	85
00	.796	.916,-1	.133	.533,-1	.245	.174	.145	.511,-1	.491,-1	.945,-2
01	.644	.758,-1	.120	.621,-1	.250	.180	.134	.563,-1	.572,-1	-.876,-2
02	.439	.578,-1	.870,-1	.737,-1	.280	.195	.123	.670,-1	.659,-1	.838,-2
03	.337	.417,-1	.570,-1	.911,-1	.252	.188	.137	.823,-1	.792,-1	.349,-1
04	.278	.410,-1	.461,-1	.124	.204	.172	.153	.917,-1	.771,-1	.214,-1
05	.229	.419,-1	.392,-1	.136	.166	.144	.143	.943,-1	.451,-1	-.316,-2
06	.180	.216,-1	.375,-2	.119	.151	.139	.108	.110	.822,-2	-.200,-1
07	.123	.886,-2	.216,-2	.122	.124	.119	.849,-1	.999,-1	-.240,-2	-.239,-1
08	.877,-1	.140,-1	.996,-2	.158	.101	.111	.729,-1	.743,-1	-.822,-2	-.826,-2
09	.711,-1	.254,-1	.263,-1	.173	.714,-1	.680,-1	.445,-1	.624,-1	-.158,-1	-.148,-1
10	.809,-1	-.601,-2	.166,-1	.180	.553,-1	.770,-1	.211,-1	.632,-1	-.132,-1	-.182,-1
11	.538,-1	.165,-2	.224,-1	.177	.256,-1	.493,-1	.269,-1	.756,-1	-.240,-1	-.398,-1
12	.328,-1	.541,-2	.185,-1	.153	-.139,-1	.270,-1	.338,-1	.103	-.516,-1	-.695,-1
13	.867,-2	.438,-1	.424,-1	.150	-.270,-1	.177,-1	.567,-1	.121	-.664,-1	-.902,-1
14	.617,-2	.777,-1	.674,-1	.142	-.106,-1	.158,-1	.563,-1	.112	-.739,-1	-.788,-1
15	.322,-1	.673,-1	.625,-1	.143	-.102,-1	-.223,-2	.361,-1	.129	-.835,-1	-.799,-1
16	.283,-1	.706,-1	.481,-1	.157	-.123,-1	-.105,-1	.256,-1	.146	-.812,-1	-.878,-1
17	.112,-1	.826,-1	.548,-1	.161	-.141,-1	-.156,-1	.109,-1	.149	-.871,-1	-.759,-1
18	.829,-2	.762,-1	.546,-1	.145	-.215,-1	-.196,-1	.295,-1	.152	-.926,-1	-.808,-1
19	-.251,-2	.510,-1	.385,-1	.110	.697,-2	-.618,-2	.592,-1	.186	-.873,-1	-.717,-1
20	-.124,-1	.547,-1	.450,-1	.109	.376,-1	.359,-1	.358,-1	.201	-.569,-1	-.349,-1
21	-.597,-2	.787,-1	.586,-1	.117	.741,-1	.636,-1	-.440,-2	.220	-.435,-1	-.142,-1
22	.232,-1	.762,-1	.639,-1	.125	.878,-1	.617,-1	-.132,-1	.237	-.623,-1	-.368,-1
23	-.705,-2	.669,-1	.478,-1	.125	.986,-1	.692,-1	-.177,-1	.247	-.713,-1	-.510,-1
24	-.116,-1	.689,-1	.603,-1	.121	.100	.665,-1	-.277,-1	.241	-.867,-1	-.584,-1
25	-.246,-1	.775,-1	.544,-1	.116	.995,-1	.888,-1	-.332,-1	.225	-.103	-.719,-1
26	-.109,-1	.100	.342,-1	.112	.127	.115	-.481,-1	.194	-.953,-1	-.406,-1
27	.730,-2	.130	.106	.119	.117	.938,-1	-.325,-1	.175	-.762,-1	-.281,-1
28	.134,-1	.160	.128	.114	.839,-1	.589,-1	-.122,-1	.181	-.250,-1	-.462,-2
29	-.746,-2	.166	.119	.752,-1	.740,-1	.665,-1	.485,-2	.171	.148,-1	.279,-1
30	.790,-3	.148	.111	.545,-1	.990,-1	.103	.135,-1	.167	.474,-1	.531,-1
31	-.176,-1	.125	.778,-1	.420,-1	.108	.130	.383,-2	.145	.494,-1	.508,-1
32	-.178,-1	.769,-1	.359,-1	.569,-1	.943,-1	.107	.417,-2	.138	.316,-1	.316,-1
33	-.305,-1	.527,-1	.443,-1	.489,-1	.106	.101	-.107,-1	.134	.451,-1	.273,-1
34	-.296,-1	.532,-1	.312,-1	.266,-1	.917,-1	.786,-1	-.676,-2	.132	.572,-1	.399,-1
35	-.150,-1	.485,-1	.434,-1	.181,-1	.757,-1	.537,-1	.237,-2	.105	.720,-1	.507,-1
36	-.193,-1	.553,-1	.477,-1	.218,-1	.635,-1	.430,-1	-.744,-2	.768,-1	.685,-1	.558,-1
37	-.153,-1	.221,-1	.348,-1	.207,-1	.996,-1	.646,-1	-.159,-1	.578,-1	.645,-1	.646,-1
38	-.322,-1	.174,-1	.261,-1	.258,-1	.103	.691,-1	-.238,-1	.554,-1	.376,-1	.487,-1
39	-.356,-1	.194,-1	.332,-1	.441,-1	.948,-1	.663,-1	-.271,-1	.659,-1	.222,-1	.491,-1
40	-.135,-1	.330,-1	.503,-1	.682,-1	.894,-1	.551,-1	-.210,-1	.794,-1	.183,-1	.478,-1
41	-.333,-2	.260,-1	.375,-1	.866,-1	.844,-1	.704,-1	-.293,-1	.594,-1	.248,-1	.390,-1
42	.669,-2	.252,-1	.144,-3	.920,-1	.705,-1	.783,-1	-.305,-1	.510,-1	.697,-1	.494,-1
43	.145,-1	.413,-1	.147,-1	.872,-1	.671,-1	.734,-1	-.174,-1	.296,-1	.459,-1	.527,-1
44	.715,-2	.423,-1	.358,-1	.862,-1	.546,-1	.874,-1	-.135,-1	.119,-1	.935,-2	.314,-1
45	.457,-2	.650,-1	.594,-1	.833,-1	.871,-1	.993,-1	-.166,-1	.132,-1	.218,-1	.349,-1
46	.962,-2	.948,-1	.778,-1	.805,-1	.109	.110	-.473,-2	.111,-1	.516,-1	.493,-1
47	.301,-1	.767,-1	.958,-1	.101	.119	.991,-1	.699,-2	.249,-1	.641,-1	.823,-1
48	.357,-1	.680,-1	.776,-1	.906,-1	.108	.884,-1	.157,-1	.299,-1	.653,-1	.862,-1
49	.374,-1	.930,-1	.770,-1	.924,-1	.101	.856,-1	.235,-1	.460,-1	.629,-1	.658,-1
50	.111,-1	.973,-1	.873,-1	.109	.105	.832,-1	.154,-1	.390,-1	.893,-1	.874,-1
51	-.302,-1	.101	.794,-1	.113	.878,-1	.852,-1	.264,-1	.548,-1	.826,-1	.815,-1
52	-.287,-1	.118	.887,-1	.131	.418,-1	.474,-1	.557,-1	.479,-1	.736,-1	.645,-1
53	-.603,-1	.125	.958,-1	.104	.334,-1	.152,-1	.654,-1	.476,-1	.639,-1	.387,-1
54	-.476,-1	.119	.944,-1	.884,-1	.350,-1	-.344,-3	.341,-1	.455,-1	.483,-1	.474,-2
55	-.202,-1	.908,-1	.665,-1	.941,-1	.412,-1	.302,-1	.268,-1	.635,-1	.428,-1	-.462,-2
56	-.205,-1	.736,-1	.542,-1	.957,-1	.566,-1	.562,-1	.178,-1	.856,-1	.212,-1	-.168,-1
57	-.228,-1	.541,-1	.427,-1	.101	.646,-1	.631,-1	.256,-1	.904,-1	.949,-2	-.233,-1
58	.124,-1	.561,-1	.587,-1	.833,-1	.556,-1	.454,-1	.261,-1	.927,-1	.133,-1	-.148,-1
59	.143,-1	.747,-1	.732,-1	.803,-1	.136,-1	.120,-2	.958,-2	.872,-1	.129,-1	-.185,-1
60	.352,-1	.964,-1	.984,-1	.917,-1	-.184,-1	-.227,-1	.104,-1	.653,-1	.207,-1	.571,-2

Run No. 56 ; v component

Separation Distance (m.)

K	1	4	5	16	20	21	64	80	84	85
00	.662	.539	.527	.451	.430	.435	.413	.357	.378	.394
01	.568	.540	.545	.435	.400	.410	.425	.395	.392	.368
02	.470	.514	.507	.438	.399	.396	.416	.374	.392	.375
03	.439	.487	.456	.409	.387	.388	.414	.369	.389	.377
04	.402	.445	.439	.427	.401	.423	.397	.375	.369	.375
05	.426	.442	.416	.445	.415	.419	.412	.377	.361	.367
06	.383	.416	.410	.449	.415	.437	.432	.347	.356	.363
07	.384	.424	.402	.435	.442	.409	.429	.380	.345	.362
08	.412	.423	.392	.424	.429	.431	.421	.373	.331	.376
09	.405	.389	.388	.432	.430	.459	.425	.379	.348	.381
10	.421	.388	.409	.418	.405	.446	.428	.374	.339	.339
11	.389	.415	.434	.439	.392	.413	.403	.371	.355	.368
12	.400	.405	.383	.432	.397	.403	.400	.395	.371	.375
13	.381	.380	.385	.408	.425	.417	.384	.384	.370	.368
14	.388	.380	.399	.439	.439	.418	.385	.351	.364	.380
15	.387	.404	.393	.423	.428	.444	.378	.362	.379	.379
16	.378	.376	.393	.386	.431	.459	.377	.373	.380	.380
17	.373	.376	.397	.402	.438	.451	.401	.369	.370	.402
18	.385	.391	.366	.431	.453	.436	.395	.378	.384	.402
19	.392	.380	.385	.414	.428	.420	.374	.376	.382	.382
20	.363	.351	.390	.405	.437	.415	.359	.403	.376	.398
21	.381	.376	.374	.403	.426	.420	.362	.402	.372	.388
22	.385	.360	.360	.418	.434	.430	.377	.392	.390	.378
23	.383	.342	.350	.403	.420	.432	.410	.384	.380	.386
24	.372	.328	.350	.411	.423	.436	.379	.344	.371	.373
25	.376	.353	.368	.419	.416	.423	.360	.334	.363	.371
26	.368	.336	.346	.426	.413	.400	.375	.355	.371	.351
27	.349	.336	.315	.407	.440	.402	.355	.366	.334	.324
28	.358	.338	.344	.406	.409	.411	.332	.381	.358	.328
29	.371	.331	.364	.403	.407	.399	.348	.347	.363	.344
30	.365	.326	.356	.398	.401	.392	.324	.360	.366	.362
31	.357	.348	.349	.398	.370	.382	.354	.378	.331	.364
32	.384	.343	.350	.382	.369	.371	.377	.353	.336	.357
33	.357	.348	.357	.405	.391	.363	.356	.369	.324	.350
34	.347	.347	.350	.384	.391	.390	.351	.387	.369	.355
35	.358	.357	.359	.384	.346	.375	.338	.373	.359	.381
36	.355	.368	.369	.380	.362	.376	.326	.383	.373	.382
37	.375	.383	.367	.392	.363	.390	.320	.370	.382	.350
38	.341	.373	.378	.391	.378	.380	.290	.341	.335	.350
39	.349	.385	.378	.382	.374	.376	.332	.344	.320	.343
40	.347	.372	.364	.376	.376	.379	.357	.333	.336	.344
41	.353	.371	.358	.338	.346	.367	.358	.331	.356	.344
42	.340	.372	.361	.337	.341	.359	.383	.332	.330	.342
43	.349	.335	.369	.374	.370	.362	.376	.321	.351	.336
44	.346	.311	.349	.371	.371	.361	.362	.309	.349	.339
45	.343	.336	.345	.364	.395	.376	.329	.305	.313	.326
46	.367	.375	.371	.378	.389	.386	.329	.328	.322	.317
47	.356	.318	.343	.375	.368	.368	.327	.325	.324	.332
48	.334	.338	.327	.387	.375	.369	.314	.341	.303	.347
49	.327	.353	.333	.382	.341	.337	.307	.340	.330	.331
50	.356	.351	.350	.389	.346	.360	.328	.326	.333	.328
51	.356	.341	.362	.387	.360	.343	.300	.315	.307	.313
52	.327	.318	.351	.371	.341	.339	.306	.282	.297	.294
53	.329	.293	.310	.349	.340	.329	.328	.299	.345	.324
54	.321	.315	.294	.350	.306	.320	.339	.323	.328	.315
55	.275	.307	.299	.329	.308	.309	.359	.343	.307	.305
56	.281	.299	.318	.326	.308	.298	.360	.327	.293	.298
57	.283	.296	.306	.307	.313	.314	.320	.335	.304	.278
58	.287	.281	.304	.293	.317	.302	.310	.336	.296	.268
59	.287	.289	.311	.308	.293	.308	.282	.320	.305	.328
60	.317	.267	.297	.300	.286	.310	.280	.311	.321	.322

Run No. 58 ; u component

Separation Distance (m.)

K	1	4	5	16	20	21	64	80	84	85
00	.170	.474,-1	.749,-1	-.404,-1	-.212,-1	.337,-1	.703,-1	.488,-2	.120	.400,-1
01	.199	.412,-1	.397,-1	-.266,-1	-.418,-1	.927,-3	.860,-1	.535,-1	.100	.308,-1
02	.177	.366,-1	.798,-1	.213,-1	-.577,-2	.103,-1	.512,-1	.490,-1	.935,-1	.381,-1
03	.151	.469,-1	.424,-1	.570,-1	.447,-1	.342,-1	.357,-1	.232,-1	.815,-1	.420,-1
04	.828,-1	.722,-1	.390,-1	.225,-1	.732,-1	.745,-1	.751,-2	.399,-1	.869,-1	.190,-1
05	.621,-1	.777,-1	.613,-1	.404,-1	.558,-1	.480,-1	.125,-1	.242,-1	.905,-1	.469,-1
06	.505,-1	.118	.271,-1	.828,-1	.373,-1	.659,-1	.139,-1	.654,-1	.731,-1	.866,-1
07	.436,-1	.127	.491,-1	.259,-1	.384,-1	.562,-1	.117,-1	.552,-1	.668,-1	.557,-1
08	.443,-1	.964,-1	.770,-1	.371,-1	.498,-1	.380,-1	.353,-1	.441,-1	.754,-1	.587,-1
09	.824,-2	.297,-1	.331,-1	.453,-1	.697,-1	.222,-1	.570,-1	.374,-1	.665,-1	.106,-1
10	-.550,-1	.144,-1	.595,-1	.109,-1	.910,-1	.218,-1	.229,-1	.570,-3	.855,-1	.231,-1
11	-.361,-1	-.541,-1	.323,-1	.208,-1	.891,-1	.302,-1	.237,-1	.443,-1	.647,-1	.585,-1
12	-.334,-1	-.415,-1	.615,-1	.126,-1	.139	.355,-1	.298,-1	.457,-1	.194,-1	.535,-1
13	.189,-1	.760,-2	.449,-1	.270,-1	.101	.555,-1	-.2[illegible],-1	.752,-1	.752,-1	.253,-1
14	.772,-1	.705,-2	.211,-1	.583,-2	.697,-1	.591,-1	-.454,-2	.114	.955,-1	.352,-2
15	.889,-1	.596,-1	-.215,-2	.320,-1	.852,-1	.572,-1	.613,-2	.920,-2	.731,-1	-.603,-2
16	.718,-1	.756,-1	.729,-2	.444,-1	.814,-1	.617,-1	-.245,-1	.835,-2	.649,-1	-.817,-2
17	.811,-1	.998,-1	-.205,-1	.667,-1	.139,-1	.442,-1	-.582,-1	-.233,-1	.557,-1	.214,-1
18	.775,-1	.150,-1	.109,-1	.108	.481,-1	.555,-1	-.109,-1	.383,-1	.678,-1	.792,-2
19	.883,-1	.114,-1	.234,-1	.737,-1	.658,-1	.407,-1	.158,-1	.164,-1	.955,-1	.435,-1
20	.939,-1	.406,-1	.260,-1	.622,-1	.444,-1	-.221,-1	.215,-1	.692,-1	.113	.527,-1
21	.393,-1	.340,-1	.408,-1	.376,-1	.951,-2	.241,-1	.448,-2	.892,-1	.108	.348,-1
22	-.247,-1	.532,-1	.642,-1	.515,-1	-.000,-2	.170,-1	.423,-1	.389,-1	.687,-1	.331,-1
23	.234,-1	.409,-1	.825,-1	.263,-1	.320,-1	.820,-2	.490,-1	.153,-1	.516,-1	.600,-1
24	.357,-1	.210,-1	.590,-1	.427,-1	.307,-1	.111,-2	.285,-1	.836,-1	.104	.679,-1
25	.182,-1	.327,-1	.215,-1	-.233,-1	.456,-1	.121,-1	.186,-1	.817,-1	.579,-1	.578,-1
26	.320,-1	.722,-1	.440,-1	-.274,-1	.487,-1	.313,-1	.264,-2	.669,-1	.540,-1	.564,-1
27	.664,-1	.791,-1	.503,-1	-.131,-1	.519,-1	.193,-1	.749,-2	.710,-1	.827,-1	.372,-1
28	.115	.403,-1	.459,-1	.127,-1	.130,-1	.338,-2	.315,-1	.329,-1	.894,-1	.738,-1
29	.128	.289,-1	.326,-1	.399,-1	-.227,-1	-.196,-1	-.462,-2	-.140,-2	.364,-1	.687,-1
30	.684,-1	.573,-1	.855,-2	.513,-1	-.831,-2	-.528,-1	.219,-1	.666,-2	.222,-1	.231,-1
31	.318,-1	.456,-1	.123,-1	.704,-1	.306,-1	-.268,-1	.216,-1	.407,-1	.500,-1	-.14[illegible],-1
32	.298,-1	.582,-1	.371,-1	.271,-1	.101,-1	-.294,-1	.363,-1	.178,-1	.230,-1	.[illegible]4,-1
33	.385,-1	.541,-1	.668,-1	.157,-1	-.357,-2	.155,-1	.873,-1	.397,-1	.287,-1	.701,-1
34	.341,-1	.803,-1	.157,-1	.152,-1	.275,-1	.326,-1	.686,-1	.623,-1	.387,-1	.626,-1
35	-.182,-1	.507,-1	-.236,-1	.506,-1	.603,-1	-.429,-1	.297,-1	.421,-1	.9[illegible]3,-1	.436,-1
36	-.342,-2	.598,-1	-.507,-1	.230,-1	.788,-1	.127,-1	.358,-1	.524,-2	.[illegible]4,-1	.122
37	.124,-2	.388,-1	.399,-2	.271,-1	.100	.376,-1	.357,-1	.573,-1	.131	.140
38	.434,-2	.184,-1	.215,-2	.547,-1	.120	.804,-1	.353,-1	.762,-1	.101	.109
39	.392,-1	.422,-1	.530,-1	.370,-1	.907,-1	.820,-1	.251,-1	.728,-1	.412,-1	.904,-1
40	.271,-1	.598,-1	.569,-1	.399,-1	.613,-1	.125,-1	.591,-1	.172,-1	.576,-1	.797,-1
41	.157,-1	.569,-1	.347,-1	.343,-1	.175,-1	-.135,-1	.[illegible]28,-1	.278,-1	.756,-1	.428,-1
42	.383,-1	.161,-1	.177,-1	.480,-1	-.382,-1	-.504,-2	.315,-1	.640,-1	.600,-1	.186,-1
43	.512,-1	.442,-1	.475,-1	.658,-1	-.199,-1	.291,-1	.950,-2	.808,-1	.926,-1	-.162,-2
44	.540,-1	.602,-1	.560,-1	.797,-1	-.148,-1	.229,-1	-.310,-1	.553,-1	.782,-1	.226,-1
45	.527,-1	.523,-1	.533,-1	.581,-1	.463,-1	.259,-1	-.300,-1	.402,-1	.854,-1	.348,-1
46	.622,-1	.809,-1	.283,-1	.914,-3	.456,-1	.595,-1	-.191,-1	.249,-1	.108	.676,-1
47	.510,-1	.781,-1	.502,-1	.331,-1	.642,-1	.708,-1	.118,-1	.861,-1	.109	.121
48	.271,-1	.478,-1	.699,-1	-.179,-1	.733,-1	.408,-1	.437,-1	.764,-1	.127	.133
49	-.152,-1	.430,-1	.[illegible]93,-1	-.208,-1	.931,-1	.107,-1	.463,-1	.551,-1	.101	.107
50	-.477,-2	.288,-1	-.568,-2	.421,-2	.898,-1	.324,-1	.298,-1	.441,-1	.966,-1	.821,-1
51	-.347,-2	.226,-1	-.[illegible]22,-1	.146,-1	.591,-1	.675,-1	.427,-1	.481,-1	.664,-1	.945,-1
52	.933,-2	-.525,-1	-.142,-1	.810,-2	.114,-1	.109	.309,-1	.291,-1	.736,-1	.718,-1
53	.481,-1	.695,-2	.414,-2	.265,-1	.252,-1	.834,-1	.541,-1	.194,-2	.560,-1	.975,-1
54	.598,-1	.138,-1	-.320,-1	.205,-1	.207,-1	.339,-1	.602,-1	-.125,-2	.124,-1	.729,-1
55	.432,-1	.649,-2	-.484,-1	.162,-1	.185,-1	.551,-1	.708,-1	.289,-1	.100,-1	.621,-1
56	.915,-1	.713,-1	-.480,-2	-.155,-1	.359,-2	.597,-1	.319,-2	.906,-1	-.184,-1	.142,-1
57	.887,-1	.900,-1	.220,-1	.475,-1	.117,-1	.381,-1	-.182,-1	.838,-1	.170,-1	.168,-1
58	.672,-1	.159,-1	.355,-1	.105	.146,-1	-.383,-1	-.658,-2	.388,-1	.310,-1	-.104,-1
59	.398,-1	-.184,-1	.319,-1	.411,-1	.234,-1	-.562,-1	.642,-2	.500,-1	.199,-1	-.375,-1
60	.703,-1	.257,-1	.286,-1	.492,-1	-.630,-2	-.736,-1	.171,-1	.106	-.351,-1	.105,-1

Run No. 58 ; v component

Separation Distance (m.)

K	1	4	5	16	20	21	64	80	84	85
00	.148	.111	.691,-1	.541,-1	.493,-1	-.601,-2	.354,-1	.614,-1	.424,-1	.634,-1
01	.579,-1	.108	.705,-1	.966,-1	.485,-1	.549,-1	.159,-1	.656,-1	.283,-1	.630,-1
02	.566,-1	.116	.691,-1	.127	.570,-1	.465,-1	.174,-1	.268,-1	.512,-1	.362,-1
03	.125	.740,-1	.136	.919,-1	-.175,-1	.638,-1	.334,-1	.370,-1	.101	.317,-1
04	.101	.861,-1	.147	.782,-1	.827,-2	.352,-1	.686,-1	.778,-1	.675,-1	.472,-1
05	.828,-1	.563,-1	.102	.108	.593,-1	.107	.987,-1	.685,-1	.909,-1	.321,-1
06	.924,-1	.386,-1	.555,-1	.776,-1	.128	.106	.836,-1	.456,-1	.488,-1	-.896,-2
07	.159	.260,-1	.574,-1	.823,-1	.776,-1	.949,-1	.695,-1	.473,-1	.710,-1	.401,-1
08	.802,-1	.526,-1	.254,-1	.215,-1	.612,-1	.830,-1	.428,-1	.982,-1	.434,-1	.106,-1
09	.110	.225,-1	.137,-1	.371,-1	.890,-1	.116	.614,-1	.714,-1	.603,-1	-.819,-2
10	.584,-1	.159,-1	-.923,-2	.411,-1	.137	.886,-1	.321,-1	.598,-1	.608,-1	.303,-1
11	.861,-1	.394,-1	.609,-1	-.158,-1	.975,-1	.631,-1	.190,-1	.681,-1	.882,-2	-.211,-1
12	.914,-1	.941,-1	.486,-1	.153,-1	.810,-1	.778,-1	-.163,-1	.406,-1	.304,-1	.460,-1
13	.111	.107	.104	-.237,-1	.489,-1	.106	-.109,-1	-.238,-1	.472,-1	.402,-1
14	.111	.125	.124	.269,-1	.466,-1	.774,-1	-.525,-2	.155,-1	.270,-1	.207,-1
15	.900,-1	.103	.892,-1	.265,-1	.880,-1	.542,-1	.498,-1	.648,-2	.448,-1	.244,-1
16	.120	.966,-1	.962,-1	.373,-2	.104	.298,-1	.256,-1	-.134,-1	.609,-1	.382,-1
17	.118	.537,-1	.731,-1	.229,-1	.314,-1	.172,-1	-.258,-1	-.243,-1	.712,-1	.287,-1
18	.830,-1	.882,-1	.113	.536,-1	.652,-1	.678,-1	-.370,-1	.324,-2	.138,-1	.156,-2
19	.117	.656,-1	.667,-1	.929,-1	.578,-1	.788,-1	-.553,-1	.389,-1	.194,-1	.164,-1
20	.122	.660,-1	.393,-1	.869,-1	.103	.106	-.291,-1	.136,-1	.538,-1	.523,-2
21	.324,-1	.612,-1	.696,-1	.741,-1	.764,-1	.263,-1	.119,-2	-.234,-1	.746,-1	-.417,-2
22	-.481,-2	.571,-1	.443,-1	.459,-1	.106	.789,-1	.000	-.217,-1	.918,-1	.600,-1
23	.286,-1	.234,-1	.471,-1	.322,-1	.692,-1	.430,-1	.423,-1	.473,-2	.672,-1	.697,-1
24	.927,-1	.716,-1	.128	.730,-1	.474,-1	.890,-1	.251,-1	.755,-2	.676,-1	.706,-2
25	.105	.930,-1	.120	.540,-1	.396,-1	.749,-1	-.340,-1	-.202,-1	.852,-1	.108,-1
26	.119	.110	.778,-1	.763,-1	.675,-1	.105	-.125,-1	-.359,-1	.664,-1	.332,-1
27	.129	.726,-1	.108	.111	.504,-1	.760,-1	-.373,-2	-.232,-1	.591,-1	-.504,-2
28	.978,-1	.764,-1	.489,-1	.106	.596,-1	.701,-1	.197,-1	-.226,-1	.153,-2	.481,-2
29	.842,-1	.789,-1	.734,-1	.106	.670,-1	.527,-1	.597,-1	.495,-1	.416,-1	.387,-1
30	.693,-1	.440,-1	.306,-1	.987,-1	.800,-1	.136	.211,-1	.760,-1	-.199,-1	.324,-1
31	.713,-1	.523,-1	.445,-1	.114	.891,-1	.622,-1	.477,-1	.112	.559,-1	-.140,-1
32	.107	.698,-1	.369,-1	.119	.704,-1	.186,-1	.152,-1	.648,-1	.313,-1	-.122,-1
33	.916,-1	.740,-1	.578,-1	.146	.565,-1	.105	.409,-1	.898,-1	.296,-1	.408,-1
34	.114	.522,-1	.776,-1	.136	.926,-1	.230,-1	.189,-2	.757,-1	.598,-2	.239,-1
35	.539,-1	.833,-1	.719,-1	.593,-1	.533,-1	.830,-1	.181,-1	.686,-1	.109,-1	.230,-2
36	.773,-1	.690,-1	.271,-1	.129	.569,-1	.781,-1	.351,-1	.956,-1	.618,-1	.205,-1
37	.681,-1	.592,-1	.654,-1	.124	.254,-1	.296,-1	.447,-1	-.348,-2	.634,-1	.754,-2
38	.853,-1	.330,-1	.515,-1	.785,-1	.612,-1	.641,-2	.585,-1	.582,-1	.323,-1	-.169,-1
39	.259,-1	.271,-1	.966,-1	.632,-1	.581,-1	.609,-1	.377,-1	-.810,-2	-.328,-1	.326,-1
40	.903,-1	.501,-1	.647,-1	.672,-1	.682,-1	.220,-1	.412,-1	-.160,-1	-.309,-1	.280,-1
41	.665,-1	.495,-1	.524,-1	-.299,-2	.499,-1	.242,-1	-.127,-1	-.424,-1	.227,-1	-.164,-1
42	.977,-1	.595,-1	.140	.288,-1	-.528,-2	.490,-1	.164,-1	-.194,-1	.235,-1	.271,-1
43	.859,-1	.919,-1	.788,-1	.588,-1	.176,-1	.484,-1	.294,-1	.217,-1	.442,-1	.363,-1
44	.674,-1	.916,-1	.548,-1	.643,-2	.618,-1	.882,-1	.115,-1	.467,-1	.633,-1	-.273,-2
45	.120	.677,-1	.106	.302,-1	.674,-1	.522,-1	-.273,-1	.154,-1	.420,-1	.669,-1
46	.913,-1	.732,-1	.728,-1	.455,-1	.455,-1	.261,-1	.373,-2	-.581,-2	.247,-1	-.198,-1
47	.469,-1	.656,-1	.742,-1	.389,-1	.341,-1	.374,-1	-.169,-1	-.662,-2	.993,-2	.316,-1
48	.224,-1	.836,-1	.699,-1	.334,-1	.338,-1	.224,-1	-.141,-1	.185,-1	.280,-3	.116,-1
49	.806,-1	.288,-1	.730,-1	.726,-2	.195,-1	.635,-1	-.509,-2	.351,-1	.312,-1	.363,-1
50	.116	.398,-1	.348,-1	.247,-1	557,-1	.575,-1	.864,-2	.314,-1	.232,-1	.480,-1
51	.691,-1	.445,-1	.606,-1	.219,-1	.344,-1	.427,-1	-.314,-1	.112,-1	.132,-1	.722,-2
52	.125	.609,-1	.710,-1	.576,-1	.679,-1	.919,-1	.149,-1	.549,-2	.181,-1	.236,-1
53	.640,-1	.378,-1	.298,-1	.781,-1	.649,-1	.481,-1	.114,-1	.762,-2	-.120,-1	.310,-1
54	.992,-1	.419,-1	.511,-1	.492,-1	.386,-1	.765,-1	.458,-2	-.146,-1	.494,-1	-.321,-3
55	.480,-1	.892,-2	.320,-1	.475,-1	.323,-1	.624,-1	.712,-2	-.201,-1	-.153,-2	-.337,-2
56	.907,-1	.421,-2	.679,-1	.695,-1	.430,-2	.405,-1	.165,-1	-.196,-1	.131,-1	.522,-1
57	.677,-1	.617,-1	.174,-1	.101	-.148,-1	.550,-1	.494,-1	.205,-1	.642,-1	-.546,-2
58	.901,-1	.103	.901,-1	.811,-1	.405,-1	.468,-1	.380,-1	.555,-1	.234,-1	-.536,-1
59	.845,-1	.715,-1	.481,-1	.271,-1	.999,-1	-.210,-1	-.424,-2	.552,-2	.169,-1	.215,-1
60	.972,-1	.486,-1	.564,-1	-.124,-3	.108	.592,-1	-.237,-2	.361,-1	-.210,-1	.371,-1

Run No. 59 ; u component

Separation Distance (m.)

K	1	4	5	16	20	21	64	80	84	85
00	.344	.946,-2	.122,-1	.818,-1	.356,-1	.921,-1	.117	.463,-1	.892,-2	-.359,-1
01	.331	.23' 1	.136,-1	.688,-1	.677,-1	.103	.572,-1	.983,-1	.382,-1	-.393,-1
02	.213	-.50 2	.292,-1	.280,-1	.120	.136	.588,-1	.114	.516,-1	-.192,-1
03	.116	.12,-2	.440,-1	.594,-1	.141	.126	.536,-1	.902,-1	.648,-1	-.160,-1
04	.643,-1	.202,-1	.287,-1	.758,-1	.123	.110	.566,-1	.674,-1	.584,-1	.615,-1
05	.691,-1	.574,-1	-.212,-1	.106	.115	.898,-1	.453,-1	.504,-1	.638,-1	.695,-1
06	.859,-1	.471,-1	.414,-2	.156	.885,-1	.772,-1	-.545,-2	.807,-1	.746,-1	.578,-1
07	.103	.515,-1	.223,-1	.204	.106	.362,-1	-.197,-1	.749,-1	.110	.353,-1
08	.103	.468,-1	.501,-1	.172	.131	.017,-1	.802,-4	.723,-1	.111	.240,-1
09	.872,-1	.210,-1	.577,-1	.146	.114	.604,-1	.109,-1	.052,-1	.104	.107,-1
10	.838,-1	.120,-1	.598,-1	.143	.143	.103	.225,-2	.300,-1	.920,-1	.219,-1
11	.893,-1	.424,-2	.449,-1	.127	.147	.119	.158,-1	.199,-1	.590,-1	.439,-1
12	.736,-1	.376,-1	.253,-1	.119	.952,-1	.109	.105,-1	.449,-1	.353,-1	.557,-1
13	.109	.455,-1	.526,-1	.117	.585,-1	.900,-1	.505,-1	.434,-1	.706,-1	.640,-1
14	.144	.271,-1	.824,-1	.116	.456,-1	.999,-1	.633,-1	.664,-1	.866,-1	.549,-1
15	.150	.469,-1	.902,-1	.872,-1	.939,-1	.790,-1	.536,-1	.757,-1	.104	.544,-1
16	.116	.000,-1	.751,-1	.789,-1	.110	.893,-1	.878,-1	.750,-1	.114	.661,-1
17	.759,-1	.705,-1	.526,-1	.839,-1	.113	.902,-1	.109	.580,-1	.720,-1	.866,-1
18	.179,-1	.385,-1	.534,-1	.958,-1	.109	.571,-1	.670,-1	.128,-1	.663,-1	.739,-1
19	.252,-1	.645,-1	.210,-1	.888,-1	.117	.354,-1	.538,-1	.265,-1	.834,-1	.548,-1
20	.634,-1	.106	.398,-1	.907,-1	.103	.449,-1	.618,-1	.353,-1	.576,-1	.787,-1
21	.506,-1	.904,-1	.574,-1	.559,-1	.892,-1	.523,-1	.523,-1	.610,-1	.560,-1	.935,-1
22	.371,-1	.913,-1	.313,-1	.201,-1	.844,-1	.482,-1	.418,-1	.795,-1	.163,-1	.101
23	.583,-1	.871,-1	.439,-1	.536,-2	.888,-1	.454,-1	.250,-1	.842,-1	.329,-1	.134
24	.763,-1	.904,-1	.559,-1	.195,-1	.868,-1	.394,-1	.202,-1	.381,-2	.528,-1	.919,-1
25	.118	.701,-1	.639,-1	.245,-1	.630,-1	.480,-1	.412,-1	.137,-1	.187,-1	.714,-1
26	.127	.925,-1	.929,-1	.482,-1	.536,-1	.200,-1	.265,-1	.315,-1	.315,-1	.742,-1
27	.129	.102	.961,-1	.612,-1	.772,-1	.264,-2	.539,-1	.318,-1	.259,-1	.591,-1
28	.111	.757,-1	.970,-1	.739,-1	.721,-1	-.614,-4	.424,-1	.238,-1	.246,-1	.398,-1
29	.853,-1	.522,-1	.852,-1	.494,-1	.111	.178,-1	.393,-1	-.150,-1	.662,-1	.362,-1
30	.457,-1	.244,-1	.692,-1	.164,-1	.114	.628,-1	.609,-1	.231,-1	.102	.805,-1
31	.159,-1	.191,-1	.412,-1	.124,-1	.117	.503,-1	.653,-1	.664,-1	.887,-1	.935,-1
32	.270,-1	.406,-1	.404,-1	-.605,-2	.175	.416,-1	.751,-1	.453,-1	.834,-1	.958,-1
33	.520,-1	.444,-1	.582,-1	.260,-1	.227	.692,-1	.893,-1	.555,-1	.320,-1	.105
34	.050,-1	.585,-1	.782,-1	.357,-1	.238	.107	.125	.545,-1	.501,-1	.604,-1
35	.709,-1	.384,-1	.727,-1	.561,-1	.203	.106	.102	.575,-1	.596,-1	.707,-1
36	.619,-1	-.280,-2	.377,-1	.572,-1	.144	.506,-1	.629,-1	.255,-1	.654,-1	.513,-1
37	.593,-1	.560,-2	.350,-1	.584,-1	.921,-1	-.436,-2	.104	.570,-1	.615,-1	.417,-1
38	.427,-1	.196,-1	.710,-1	.422,-1	.926,-1	-.915,-2	.126	.875,-1	.716,-1	.162,-1
39	.330,-1	.351,-1	.113	.362,-1	.836,-1	.173,-1	.122	.495,-1	.416,-1	.950,-2
40	.509,-1	.501,-1	.161	.394,-1	.113	-.350,-2	.769,-1	.596,-1	.524,-1	.167,-1
41	.671,-1	.694,-1	.117	.103	.109	-.304,-1	.484,-1	.935,-1	.163,-1	.380,-1
42	.015,-1	.636,-1	.109	.130	.657,-1	-.331,-1	.565,-1	.122	.548,-2	.439,-1
43	.039,-1	.704,-1	.118	.961,-1	.542,-1	-.316,-1	.624,-1	.504,-1	.318,-1	.547,-1
44	.455,-1	.583,-1	.761,-1	.745,-1	.273,-1	.150,-1	.570,-1	.535,-1	.526,-1	.691,-1
45	.376,-1	.562,-1	.422,-1	.679,-1	.196,-1	.694,-1	.339,-1	.624,-1	.645,-1	.699,-1
46	.563,-1	.443,-1	.498,-1	.562,-1	.330,-1	.822,-1	.329,-1	.846,-1	.932,-1	.618,-1
47	.738,-1	.160,-1	.265,-1	.447,-1	.501,-1	.865,-1	.442,-1	.942,-1	.703,-1	.710,-1
48	.957,-1	.222,-1	.373,-1	.455,-1	.312,-1	.945,-1	.413,-1	.782,-1	.602,-1	.532,-1
49	.647,-1	.325,-1	.764,-1	.378,-1	.568,-1	.821,-1	.341,-1	.506,-1	.890,-1	.351,-1
50	.723,-1	.349,-1	.793,-1	.323,-1	.601,-1	.834,-1	.355,-1	.484,-1	.829,-1	.535,-1
51	.723,-1	.242,-1	.732,-1	.255,-1	.963,-2	.748,-1	.274,-1	.668,-1	.785,-1	.553,-1
52	.109	.984,-2	.272,-1	.335,-1	-.244,-1	.326,-1	-.257,-2	.622,-1	.783,-1	.117,-1
53	.116	-.537,-2	.334,-1	.744,-1	-.605,-2	.375,-1	.431,-1	.461,-1	.524,-1	-.133,-1
54	.918,-1	-.570,-1	-.182,-2	.725,-1	.302,-1	.679,-1	.351,-1	.710,-1	.527,-1	.153,-1
55	.748,-1	-.499,-1	-.356,-1	.115	.304,-1	.112	.310,-1	.690,-1	.542,-1	.369,-1
56	.021,-1	-.542,-1	-.256,-1	.148	-.185,-2	.128	.302,-1	.971,-1	.150,-1	.222,-1
57	.771,-1	-.101,-1	-.204,-3	.110	.103,-1	.113	.305,-1	.790,-1	.155,-1	.252,-1
58	.952,-1	.202,-1	.257,-1	.772,-1	.227,-1	.105	-.206,-1	.991,-1	.559,-1	.161,-1
59	.104	.295,-1	-.159,-1	.548,-1	.399,-1	.929,-1	-.536,-1	.963,-1	.108	.233,-1
60	.127	.154,-1	-.512,-2	.390,-1	.504,-1	.662,-1	-.226,-1	.543,-1	.657,-1	.505,-1

Run No. 59 ; v component

	Separation Distance (m.)									
K	1	4	5	16	20	21	64	80	84	85
00	.268	.755,-1	.386,-1	.737,-1	.568,-1	.236,-1	.101	.219,-1	.531,-1	.445,-1
01	.183	.105	.611,-1	.872,-1	.491,-1	.537,-1	.902,-1	.787,-2	.720,-1	.521,-1
02	.211,-1	.114	.802,-1	.776,-1	.515,-1	.308,-1	.803,-1	-.109,-1	.879,-1	.488,-1
03	.444,-1	.105	.487,-1	.773,-1	.773,-1	.607,-1	.802,-1	.390,-1	.108	.104
04	.330,-1	.720,-1	.221,-1	.141	.645,-1	.202,-1	.970,-1	.781,-1	.747,-1	.111
05	.927,-2	.683,-1	.314,-1	.981,-1	.566,-1	.361,-1	.954,-1	.104	.853,-1	.103
06	-.196,-1	.120	.240,-1	.747,-1	.115	.653,-1	.134	.106	.930,-1	.501,-1
07	.176,-2	.136	.714,-1	.372,-1	.758,-1	.958,-1	.158	.121	.815,-1	.587,-1
08	.349,-1	.101	.569,-1	.107	.979,-1	.315,-1	.861,-1	.131	.657,-1	.509,-1
09	.604,-1	.113	.517,-1	.789,-1	.810,-1	.388,-1	.583,-1	.120	.554,-1	.188,-2
10	.835,-1	.421,-1	.498,-1	.686,-1	.815,-1	.263,-1	.792,-1	.103	.747,-1	-.805,-2
11	.354,-1	.781,-2	.105,-2	.604,-1	.103	.743,-1	.653,-1	.596,-1	.116	.831,-2
12	.183,-1	-.222,-1	.187,-1	.788,-1	.599,-1	.826,-1	.806,-1	.307,-1	.101	.780,-2
13	.212,-1	.201,-1	.107,-1	.477,-1	.871,-1	.172,-1	.860,-1	.171,-1	.986,-1	.193,-1
14	.834,-3	.747,-2	.742,-2	.375,-1	.485,-1	-.118,-1	.427,-1	.390,-1	.897,-1	-.202,-1
15	.137,-1	.145,-1	.450,-1	.710,-1	.701,-1	-.167,-1	.600,-1	.460,-1	.626,-1	.624,-2
16	.249,-1	.403,-2	.392,-1	.506,-1	.228,-1	-.123,-1	.656,-1	.234,-1	.596,-1	.594,-1
17	.203,-1	.238,-1	.396,-1	.441,-1	.892,-1	.251,-1	.610,-1	.286,-1	.539,-1	.160,-1
18	.197,-1	.190,-1	.473,-1	.170,-1	.969,-1	.471,-1	.754,-1	-.270,-1	.527,-1	.167,-2
19	.678,-1	.392,-2	.587,-1	.184,-1	.389,-1	.141,-1	.691,-1	-.261,-1	.647,-1	.664,-1
20	.449,-1	-.167,-1	.423,-1	.442,-1	.380,-1	.347,-1	.525,-1	-.188,-1	.778,-1	.716,-1
21	.307,-1	.323,-1	-.637,-2	.245,-1	.718,-1	.116	.537,-1	.404,-1	.632,-1	.477,-1
22	.306,-1	.146,-1	-.262,-1	.280,-1	.810,-1	.517,-1	.685,-1	.536,-1	.711,-1	.395,-1
23	.292,-1	.352,-1	-.127,-1	.508,-1	.483,-1	.319,-1	.492,-1	.371,-1	.000,-1	.410,-1
24	.102,-1	.363,-1	.196,-1	.966,-1	.309,-1	.338,-1	.283,-1	.319,-1	.120	.536,-1
25	.241,-1	.132,-1	.469,-1	.880,-1	.417,-1	.562,-1	.136,-1	.371,-1	.841,-1	.639,-1
26	.121,-2	-.106,-1	.783,-1	.632,-1	.708,-1	.198,-1	.380,-1	.613,-1	.560,-1	.378,-1
27	.270,-1	-.263,-1	.477,-1	.624,-1	.778,-1	.501,-1	.190,-1	.641,-1	.415,-1	.156,-1
28	.504,-1	.738,-2	.177,-1	.867,-1	.610,-1	.442,-1	.358,-1	.525,-1	.741,-1	.569,-2
29	.557,-1	.522,-1	.762,-2	.976,-1	.327,-1	.504,-1	.576,-1	.699,-1	.106	.694,-2
30	-.742,-3	.415,-1	.262,-1	.131	.442,-1	.515,-1	.426,-1	.867,-1	.145	.198,-1
31	.120,-1	.439,-1	-.726,-2	.943,-1	.650,-1	.453,-1	.135,-1	.114	.114	.109,-1
32	-.255,-2	.312,-1	-.257,-1	.666,-1	.744,-1	.202,-1	.386,-1	.139	.109	.174,-1
33	-.427,-2	.660,-1	.726,-3	.575,-1	.112	.253,-2	.206,-1	.137	.955,-1	.941,-1
34	.296,-1	.269,-1	.686,-2	.306,-1	.113	.468,-1	.130,-1	.933,-1	.924,-1	.108
35	.210,-1	.440,-1	.118,-1	.575,-1	.560,-1	.390,-1	.301,-1	.774,-1	.284,-1	.283,-1
36	.245,-1	.590,-1	.317,-1	.315,-1	.918,-1	.240,-1	.106,-1	.921,-1	.501,-1	-.286,-2
37	.446,-1	.405,-1	.168,-1	.444,-1	.920,-1	.291,-1	.231,-1	.116	.595,-1	-.118,-1
38	.412,-1	.137,-1	-.216,-1	.528,-1	.862,-1	.305,-2	-.688,-2	.131	.763,-1	.293,-1
39	.610,-1	.325,-1	.126,-1	.787,-1	.507,-1	.247,-1	.201,-2	.111	.663,-1	.960,-2
40	.150,-1	.887,-1	.320,-1	.455,-1	.535,-1	.244,-1	.272,-1	.967,-1	.605,-1	.517,-1
41	-.224,-1	.900,-1	.804,-2	.594,-1	.357,-1	.168,-2	.455,-1	.119	.706,-1	.568,-1
42	-.579,-2	.897,-1	.395,-1	.824,-1	.252,-1	.456,-2	.189,-1	.945,-1	.822,-1	.267,-1
43	.904,-2	.109	.259,-1	.655,-1	.504,-1	.651,-1	.663,-1	.807,-1	.955,-1	.130,-3
44	-.223,-1	.116	.192,-1	.699,-1	.640,-1	.501,-1	.921,-1	.973,-1	.922,-1	.675,-2
45	.216,-1	.667,-1	.653,-1	.872,-1	.750,-1	.217,-1	.598,-1	.112	.809,-1	-.214,-2
46	-.508,-2	.484,-1	.571,-1	.615,-1	.406,-1	.119,-1	.306,-1	.892,-1	.628,-1	.653,-2
47	.314,-1	.259,-1	.507,-1	.661,-1	.858,-1	.486,-1	.236,-1	.503,-1	.475,-1	.483,-1
48	.523,-1	.807,-2	.397,-1	.558,-1	.799,-1	.420,-1	.342,-2	.770,-1	.272,-1	.549,-1
49	.355,-1	.143,-1	.179,-1	.476,-1	.401,-1	.427,-1	.109,-1	.737,-1	.443,-1	.219,-1
50	.292,-1	.595,-1	.536,-1	.306,-1	.279,-1	.427,-1	.511,-2	.395,-1	.562,-1	-.191,-1
51	-.270,-1	.630,-1	.462,-1	.324,-2	.282,-1	-.693,-2	.948,-2	.217,-1	.283,-1	-.142,-1
52	-.129,-1	.627,-1	.543,-1	.250,-1	.557,-1	-.334,-1	.174,-2	.384,-1	.477,-1	.172,-1
53	.630,-2	.616,-1	.439,-1	.194,-1	.259,-1	-.505,-1	.548,-2	.907,-1	.428,-1	.407,-1
54	.210,-1	.752,-1	.541,-2	.250,-1	.391,-1	-.136,-1	-.130,-1	.775,-1	.640,-1	.182,-1
55	.242,-1	.775,-1	-.426,-1	.736,-1	.364,-1	-.263,-2	-.478,-2	.580,-1	.637,-1	.177,-1
56	.414,-1	.147	-.274,-1	.592,-1	.558,-1	.282,-1	-.178,-1	.509,-1	.293,-1	-.578,-2
57	-.195,-2	.948,-1	-.186,-2	.307,-1	.288,-1	-.257,-2	.220,-1	.559,-1	.4[illegible]-1	.474,-1
58	-.189,-2	.934,-1	-.128,-1	-.121,-2	.553,-1	-.197,-1	.791,-2	.397,-1	.46[illegible],-1	.450,-1
59	-.409,-1	.646,-1	-.400,-1	.170,-1	.406,-1	-.653,-2	-.313,-2	.650,-1	.803,-2	.546,-1
60	-.235,-1	.693,-1	-.394,-1	.309,-1	.295,-1	.971,-2	-.253,-1	.435,-1	-.999,-2	.465,-1

Run No. 60 ; u compone**

Separation Distance (m.)

K	1	4	5	16	20	21	64	80	84	85
00	.765	.645,-1	.545,-1	.102	.305	.192	.283,-1	.141	.129	.129
01	.608	.630,-1	.620,-1	.898,-1	.346	.218	.358,-1	.167	.115	.116
02	.466	.697,-1	.687,-1	.108	.353	.254	.423,-1	.145	.934,-1	.110
03	.369	.809,-1	.693,-1	.910,-1	.350	.284	.515,-1	.104	.834,-1	.924,-1
04	.342	.108	.965,-1	.787,-1	.309	.269	.356,-1	.764,-1	.679,-1	.749,-1
05	.315	.104	.895,-1	.760,-1	.262	.252	.291,-1	.683,-1	.709,-1	.562,-1
06	.251	.113	.943,-1	.841,-1	.253	.255	.380,-1	.575,-1	.718,-1	.296,-1
07	.221	.138	.105	.867,-1	.235	.220	.579,-1	.750,-1	.854,-1	.366,-1
08	.185	.108	.998,-1	.980,-1	.202	.185	.647,-1	.929,-1	.105	.287,-1
09	.186	.686,-1	.783,-1	.100	.166	.164	.914,-1	.778,-1	.104	.377,-1
10	.156	.750,-1	.712,-1	.118	.175	.166	.993,-1	.944,-1	.643,-1	.177,-1
11	.123	.665,-1	.742,-1	.134	.149	.141	.970,-1	.103	.537,-1	.254,-1
12	.106	.784,-1	.101	.157	.147	.138	.116	.906,-1	.630,-1	.483,-1
13	.110	.894,-1	.114	.184	.159	.146	.122	.777,-1	.709,-1	.488,-1
14	.992,-1	.105	.968,-1	.205	.125	.137	.114	.101	.904,-1	.545,-1
15	.730,-1	.100	.834,-1	.175	.106	.112	.129	.870,-1	.999,-1	.616,-1
16	.718,-1	.930,-1	.660,-1	.149	.903,-1	.103	.158	.763,-1	.104	.554,-1
17	.702,-1	.909,-1	.624,-1	.141	.903,-1	.920,-1	.187	.780,-1	.904,-1	.508,-1
18	.694,-1	.881,-1	.720,-1	.147	.993,-1	.804,-1	.206	.635,-1	.992,-1	.828,-1
19	.518,-1	.850,-1	.787,-1	.152	.755,-1	.675,-1	.203	.566,-1	.957,-1	.873,-1
20	.563,-1	.756,-1	.783,-1	.135	.795,-1	.857,-1	.174	.553,-1	.110	.118
21	.736,-1	.694,-1	.504,-1	.120	.102	.884,-1	.140	.402,-1	.135	.134
22	.799,-1	.565,-1	.204,-1	.131	.113	.869,-1	.123	.685,-1	.150	.146
23	.706,-1	.238,-1	.191,-2	.119	.105	.774,-1	.117	.575,-1	.128	.179
24	.961,-1	.595,-2	-.162,-1	.129	.126	.786,-1	.128	.669,-1	.120	.177
25	.117	-.167,-1	-.143,-1	.131	.128	.101	.116	.693,-1	.108	.158
26	.124	-.245,-1	-.269,-1	.130	.128	.103	.108	.857,-1	.111	.145
27	.123	.172,-1	-.183,-1	.900,-1	.135	.116	.102	.842,-1	.118	.141
28	.104	.298,-1	-.126,-1	.101	.103	.102	.102	.869,-1	.126	.139
29	.111	.213,-1	-.142,-1	.894,-1	.111	.112	.122	.967,-1	.148	.159
30	.113	.109,-1	-.202,-1	.821,-1	.124	.112	.118	.108	.162	.162
31	.110	-.714,-2	-.175,-1	.884,-1	.128	.124	.114	.112	.176	.173
32	.129	.260,-1	.119,-1	.665,-1	.130	.125	.103	.106	.179	.170
33	.112	.287,-1	.250,-1	.588,-1	.105	.936,-1	.995,-1	.762,-1	.188	.181
34	.937,-1	.180,-1	.158,-1	.565,-1	.655,-1	.536,-1	.996,-1	.568,-1	.178	.172
35	.965,-1	.139,-1	.540,-1	.433,-1	.142,-1	.230,-1	.917,-1	.307,-1	.196	.170
36	.841,-1	.272,-1	.436,-1	.379,-1	.503,-2	.975,-2	.879,-1	.143,-1	.185	.135
37	.552,-1	.226,-1	.331,-1	.344,-1	-.126,-2	.572,-2	.893,-1	.264,-1	.164	.108
38	.446,-1	.261,-1	-.143,-2	.467,-2	.880,-2	-.353,-2	.921,-1	.102,-1	.145	.983,-1
39	.535,-1	.369,-1	.509,-2	.265,-1	.988,-2	.168,-2	.131	.190,-1	.122	.788,-1
40	.104	.612,-1	.134,-1	.370,-1	.250,-1	-.188,-1	.119	.233,-1	.112	.747,-1
41	.110	.698,-1	.264,-1	.379,-1	.438,-1	.168,-3	.941,-1	-.124,-1	.824,-1	.445,-1
42	.106	.744,-1	.463,-1	.443,-1	.691,-1	.346,-1	.667,-1	-.212,-1	.940,-1	.436,-1
43	.832,-1	.865,-1	.482,-1	.698,-1	.795,-1	.501,-1	.660,-1	-.310,-1	.964,-1	.470,-1
44	.532,-1	.798,-1	.651,-1	.643,-1	.734,-1	.655,-1	.538,-1	-.313,-1	.980,-1	.738,-1
45	.523,-1	.670,-1	.610,-1	.570,-1	.725,-1	.595,-1	.446,-1	-.524,-2	.110	.907,-1
46	.154,-1	.426,-1	.599,-1	.558,-1	.887,-1	.565,-1	.459,-1	.349,-2	.990,-1	.851,-1
47	-.215,-2	.476,-1	.683,-1	.730,-1	.116	.359,-1	.305,-1	.138,-1	.806,-1	.865,-1
48	-.345,-1	.389,-1	.376,-1	.796,-1	.975,-1	.285,-1	.470,-1	.230,-1	.755,-1	.801,-1
49	-.277,-1	.427,-1	.232,-1	.940,-1	.682,-1	.191,-1	.569,-1	.250,-1	.111	.104
50	-.487,-1	.311,-1	.350,-2	.900,-1	.762,-1	.246,-1	.633,-1	.342,-1	.131	.997,-1
51	-.633,-1	.503,-1	.660,-2	.118	.640,-1	.203,-1	.619,-1	.389,-1	.106	.706,-1
52	-.728,-1	.736,-1	-.350,-2	.120	.631,-1	.131,-1	.348,-1	.298,-1	.928,-1	.686,-1
53	-.497,-1	.570,-1	-.589,-2	.110	.560,-1	.203,-1	.638,-1	.377,-1	.109	.706,-1
54	-.375,-1	.483,-1	-.185,-1	.109	.493,-1	.437,-1	.893,-1	.222,-1	.108	.844,-1
55	-.388,-1	.371,-1	-.396,-1	.142	.571,-1	.382,-1	.104	.204,-1	.108	.742,-1
56	-.484,-1	.322,-1	-.298,-1	.146	.560,-1	.370,-1	.102	-.116,-3	.119	.953,-1
57	-.355,-1	.182,-1	-.170,-1	.151	.326,-1	.538,-2	.103	-.204,-1	.138	.125
58	-.388,-1	.336,-1	-.215,-1	.153	.549,-2	-.148,-1	.112	-.892,-2	.154	.146
59	-.279,-1	.441,-1	-.143,-2	.174	-.276,-1	-.958,-2	.150	-.292,-1	.183	.176
60	-.765,-2	.395,-1	-.108,-1	.159	-.218,-1	-.163,-1	.172	-.290,-1	.196	.188

Run No. 60 ; v component

Separation Distance (m.)

K	1	4	5	16	20	21	64	80	84	85
00	.272	.893,-1	.116	.156,-1	.447,-2	.463,-2	.449,-1	.237,-1	.230,-1	.121,-1
01	.162	.790,-1	.169	.421,-1	.696,-1	.161,-1	.132,-1	.547,-1	.376,-1	.197,-1
02	.142	.128	.190	.968,-2	-.514,-2	-.565,-2	.155,-1	.206,-1	.429,-1	.208,-1
03	.459,-1	.123	.920,-1	.227,-1	.126,-1	-.276,-1	.864,-3	.909,-2	.264,-1	.441,-1
04	.533,-1	.801,-1	.114	.252,-1	.241,-1	.135,-1	.239,-1	.360,-1	.347,-1	.493,-1
05	.477,-1	.138	.139	.451,-1	.145,-1	.479,-1	.412,-1	.433,-1	-.112,-1	.313,-1
06	.557,-1	.455,-1	.104	.751,-1	.471,-1	-.325,-2	.768,-2	.637,-1	.502,-1	.735,-1
07	.617,-1	.104	.843,-1	.327,-1	.401,-1	.964,-2	.936,-2	.469,-1	.190,-1	.652,-1
08	.861,-1	.466,-1	.550,-1	.678,-1	.171,-1	.353,-1	.137,-1	.111	.616,-1	.499,-1
09	.902,-1	.434,-1	.497,-1	.533,-1	-.578,-1	-.194,-1	-.918,-2	.253,-1	.395,-2	.301,-1
10	.288,-1	.549,-1	.239,-1	.495,-1	-.832,-1	.105,-1	.720,-2	.335,-1	-.462,-2	.801,-2
11	.999,-1	.522,-1	.710,-1	.531,-1	-.527,-1	-.129,-1	-.275,-1	.793,-1	.295,-1	.401,-1
12	.780,-1	.436,-1	.447,-1	.333,-1	-.114,-1	.383,-3	-.161,-1	.625,-1	.423,-1	.110
13	.109	.384,-1	.382,-2	.477,-1	-.237,-1	.627,-1	.427,-2	.558,-1	.496,-1	.774,-1
14	.598,-1	.319,-1	.340,-1	.479,-1	.114,-1	.250,-1	-.631,-2	.560,-1	.413,-1	.652,-1
15	.402,-1	.360,-1	.105,-1	-.762,-2	.418,-1	.577,-1	.413,-1	.525,-1	.363,-1	.457,-1
16	.249,-1	.880,-2	.621,-1	.531,-1	.106,-1	.633,-1	-.872,-2	.168,-1	.740,-1	.477,-1
17	.363,-1	.314,-1	.363,-1	.485,-1	.484,-1	.135,-1	.104,-1	.369,-1	.380,-1	.343,-1
18	.792,-1	.763,-2	.723,-1	.751,-1	.454,-2	.321,-2	.143,-1	.510,-1	.359,-1	.665,-1
19	.592,-1	-.497,-2	.622,-1	.526,-1	.159,-1	.419,-1	-.250,-1	.490,-1	.576,-1	.781,-1
20	.275,-1	-.868,-2	.922,-2	.158,-1	-.287,-1	.243,-1	-.166,-2	.565,-1	.522,-1	.694,-1
21	.501,-1	.105,-1	.311,-2	-.855,-2	.333,-1	.727,-3	.415,-1	.182,-2	.584,-1	.471,-1
22	.697,-1	-.154,-1	.127,-1	.718,-1	.416,-1	-.215,-1	.377,-1	-.854,-2	.887,-1	.574,-1
23	.416,-3	-.105,-1	-.162,-2	.133,-1	.218,-1	.861,-2	.168,-1	.000	.120,-1	.336,-1
24	-.782,-2	.230,-2	.507,-1	.489,-1	.117,-1	.575,-1	.329,-1	-.219,-1	.893,-2	.449,-1
25	-.417,-1	.153,-1	-.245,-1	.258,-1	-.516,-1	-.227,-1	.379,-1	.285,-1	-.281,-2	.261,-1
26	-.140,-1	.939,-2	.244,-1	.165,-1	.823,-2	.396,-1	.230,-1	.316,-1	-.292,-1	.186,-1
27	.369,-1	.158,-2	.689,-2	.637,-1	.469,-2	.142,-1	.584,-1	.301,-1	-.113,-1	.462,-1
28	.124,-1	-.154,-1	.529,-1	.246,-1	.131,-1	.150,-1	.268,-1	.200,-1	-.248,-1	.182,-1
29	.596,-1	.305,-1	-.259,-1	.229,-1	.322,-1	.127,-1	.408,-1	.577,-1	.271,-1	.435,-1
30	.277,-1	.929,-2	.275,-1	.820,-2	-.572,-1	.758,-2	.333,-1	.365,-1	-.161,-1	.428,-1
31	.193,-1	.222,-1	.324,-2	.758,-1	-.266,-1	-.473,-1	.245,-1	.741,-1	.266,-1	.540,-1
32	.449, 1	-.202,-2	.431,-1	.229,-1	-.334,-1	-.433,-1	.633,-1	.221,-1	.408,-1	.547,-1
33	.296,-1	-.266,-1	.386,-2	.309,-1	-.499,-1	.536,-1	.268,-1	.365,-1	.473,-1	.379,-1
34	.955,-2	-.852,-3	-.337,-1	.350,-1	.330,-1	.135,-1	-.353,-2	.362,-1	-.248,-2	.466,-1
35	.365,-1	.706,-1	.176,-1	.713,-1	.101,-1	.313,-1	.388,-1	.349,-1	.130,-2	.496,-1
36	-.228,-1	.377,-1	-.113,-1	.282,-1	.132,-1	.718,-1	.300,-1	.250,-2	-.122,-1	.161,-1
37	.560,-2	-.175,-1	.155,-1	-.103,-1	.157,-1	.572,-1	.197,-1	.502,-2	.162,-1	.698,-1
38	.427,-3	.887,-2	.133,-1	.218,-1	-.407,-1	.514,-1	-.106,-1	.424,-1	-.363,-1	.286,-1
39	.774,-3	.352,-1	-.108,-2	-.308,-1	-.142,-1	.135,-1	-.231,-1	.270,-1	.134,-2	.141,-1
40	.508,-1	.399,-1	-.157,-1	.159,-1	-.359,-1	-.496,-1	.207,-1	.508,-1	-.910,-1	.138,-1
41	.347,-2	.154,-1	.283,-1	.640,-2	-.209,-1	-.646,-1	-.125,-1	.117,-1	-.396,-1	.860,-2
42	.442,-1	-.171,-1	.586,-1	-.119,-2	-.201,-1	-.313,-1	.103,-1	-.391,-2	-.644,-1	.230,-1
43	.513,-1	.258,-1	.309,-1	.510,-2	-.460,-1	.371,-2	.211,-1	.514,-1	-.204,-1	.408,-1
44	.411,-1	.194,-2	.334,-1	-.805,-2	-.153,-1	.304,-1	-.132,-1	.221,-1	-.224,-1	.313,-1
45	.174,-1	.587,-1	.515,-2	.740,-2	-.264,-1	.343,-1	.466,-1	.521,-3	-.582,-1	.397,-1
46	.403,-2	.203,-1	.309,-1	.435,-1	.444,-2	.489,-1	-.475,-1	.401,-1	-.144,-2	.718,-1
47	.559,-1	.279,-1	.485,-1	.355,-1	.247,-1	-.269,-1	.840,-2	-.125,-1	-.438,-1	.630,-1
48	-.320,-2	.355,-1	.516,-1	.145,-1	-.446,-1	-.869,-1	.179,-1	.589,-1	-.435,-2	.731,-1
49	.902,-2	.752,-1	.331,-1	.490,-1	-.652,-1	-.747,-1	-.259,-1	.345,-1	-.388,-1	.417,-1
50	.214,-1	.517,-1	.551,-1	.188,-1	-.189,-1	-.466,-1	-.397,-1	.155,-1	.910,-2	.614,-1
51	.572,-1	-.155,-1	.196,-1	.199,-1	-.305,-1	-.402,-1	.444,-2	.260,-1	.140,-1	.489,-1
52	.809,-1	.131,-1	.544,-1	.145,-2	-.380,-1	-.484,-1	-.209,-1	.573,-2	.468,-2	.724,-1
53	.466,-1	.325,-1	.333,-1	-.325,-1	-.307,-1	-.244,-1	-.424,-1	.461,-1	.184,-1	.172,-1
54	.140,-1	.570,-1	.149,-1	-.371,-1	-.700,-1	-.619,-1	.435,-1	.427,-1	-.365,-1	.409,-1
55	-.319,-1	.322,-1	.142,-1	-.295,-1	-.217,-1	-.356,-1	.030,-1	.989,-2	.351,-1	.942,-1
56	-.187,-1	.112,-1	.338,-1	.223,-2	-.184,-1	-.348,-1	-.540,-2	.466,-1	-.230,-1	.825,-2
57	-.119,-1	.346,-1	.124,-1	.700,-1	.230,-1	-.138,-1	-.315,-1	.306,-1	-.150,-1	.550,-1
58	-.424,-1	.319,-1	.339,-1	-.933,-2	.464,-1	-.233,-1	.109,-1	.321,-1	-.406,-1	.447,-2
59	-.373,-3	-.314,-1	-.218,-1	-.31[illegible],-1	-.216,-1	.735,-2	.223,-2	.539,-1	-.143,-1	.567,-1
60	.149,-1	.855,-2	-.187,-1	.988,-2	-.613,-1	-.305,-1	.329,-1	-.156,-2	-.391,-1	.416,-1

Run No. 62 ; u component

K	Separation Distance (m.)									
	1	4	5	16	20	21	64	80	84	85
00	.874	.335	.359	.376	.659	.625	.168	.299	.148	.153
01	.813	.321	.337	.403	.647	.642	.185	.310	.143	.138
02	.699	.311	.323	.414	.616	.620	.201	.312	.151	.134
03	.624	.297	.319	.428	.582	.596	.212	.298	.167	.154
04	.565	.280	.312	.428	.554	.569	.223	.298	.185	.173
05	.513	.276	.308	.431	.522	.546	.235	.302	.198	.191
06	.481	.287	.315	.423	.483	.510	.247	.291	.210	.204
07	.463	.281	.318	.414	.447	.482	.246	.282	.223	.215
08	.449	.264	.303	.411	.424	.460	.247	.267	.231	.224
09	.431	.266	.292	.403	.401	.445	.248	.250	.224	.216
10	.409	.278	.295	.394	.383	.424	.249	.241	.217	.198
11	.398	.287	.288	.381	.356	.405	.250	.240	.201	.185
12	.371	.273	.291	.392	.334	.377	.241	.226	.184	.163
13	.333	.273	.285	.393	.313	.359	.233	.209	.170	.145
14	.298	.272	.298	.391	.294	.338	.220	.201	.174	.142
15	.286	.277	.298	.385	.270	.318	.201	.204	.180	.160
16	.266	.274	.300	.374	.235	.293	.178	.194	.183	.193
17	.259	.258	.286	.356	.202	.258	.156	.171	.181	.199
18	.248	.240	.252	.338	.189	.229	.145	.162	.167	.174
19	.244	.222	.224	.320	.187	.219	.127	.166	.149	.165
20	.247	.204	.214	.285	.168	.20[illegible]	.113	.169	.129	.143
21	.249	.192	.208	.263	.153	.176	.106	.152	.105	.105
22	.252	.180	.211	.252	.145	.172	.108	.147	.965,-1	.879,-1
23	.263	.190	.221	.242	.143	.159	.114	.144	.932,-1	.827,-1
24	.245	.189	.222	.225	.158	.167	.122	.151	.909,-1	.934,-1
25	.231	.190	.216	.219	.159	.178	.117	.161	.110	.110
26	.222	.182	.201	.200	.156	.177	.951,-1	.156	.117	.117
27	.212	.173	.182	.179	.163	.175	.808,-1	.154	.106	.116
28	.200	.166	.177	.164	.166	.178	.695,-1	.158	.826,-1	.114
29	.205	.153	.163	.150	.161	.176	.474,-1	.163	.600,-1	.929,-1
30	.212	.126	.147	.148	.153	.181	.299,-1	.174	.300,-1	.718,-1
31	.207	.118	.137	.142	.143	.162	.178,-1	.173	.132,-1	.513,-1
32	.196	.102	.126	.149	.138	.159	.116,-1	.169	.726,-3	.325,-1
33	.181	.101	.117	.155	.143	.158	.286,-1	.174	.209,-2	.410,-1
34	.157	.110	.130	.148	.137	.157	.311,-1	.169	.295,-1	.604,-1
35	.140	.112	.120	.144	.136	.166	.335,-1	.153	.426,-1	.681,-1
36	.126	.107	.113	.131	.127	.166	.444,-1	.155	.609,-1	.746,-1
37	.117	.104	.112	.119	.125	.167	.537,-1	.157	.595,-1	.632,-1
38	.122	.115	.128	.114	.112	.158	.599,-1	.166	.615,-1	.585,-1
39	.142	.136	.134	.125	.116	.153	.644,-1	.166	.621,-1	.532,-1
40	.164	.154	.155	.146	.111	.160	.720,-1	.161	.576,-1	.565,-1
41	.176	.165	.176	.153	.103	.154	.805,-1	.157	.537,-1	.524,-1
42	.175	.184	.183	.157	.109	.152	.872,-1	.141	.420,-1	.442,-1
43	.173	.188	.181	.155	.110	.146	.124	.126	.399,-1	.419,-1
44	.159	.185	.179	.166	.101	.128	.887,-1	.117	.415,-1	.502,-1
45	.151	.185	.166	.161	.103	.125	.808,-1	.115	.394,-1	.486,-1
46	.129	.173	.168	.178	.993,-1	.117	.719,-1	.924,-1	.306,-1	.413,-1
47	.986,-1	.166	.165	.180	.110	.122	.749,-1	.699,-1	.368,-1	.444,-1
48	.877,-1	.172	.174	.199	.111	.126	.741,-1	.717,-1	.576,-1	.655,-1
49	.872,-1	.180	.175	.210	.110	.134	.818,-1	.729,-1	.749,-1	.856,-1
50	.863,-1	.172	.178	.212	.116	.139	.972,-1	.804,-1	.867,-1	.946,-1
51	.103	.182	.177	.209	.118	.130	.112	.949,-1	.847,-1	.832,-1
52	.113	.188	.181	.217	.124	.116	.116	.104	.764,-1	.813,-1
53	.108	.187	.196	.220	.124	.118	.113	.115	.621,-1	.853,-1
54	.103	.184	.192	.218	.126	.126	.982,-1	.128	.640,-1	.819,-1
55	.105	.182	.189	.227	.130	.126	.103	.131	.760,-1	.850,-1
56	.107	.175	.187	.225	.133	.132	.113	.136	.873,-1	.948,-1
57	.104	.162	.185	.218	.147	.149	.106	.142	.111	.110
58	.918,-1	.130	.169	.220	.168	.171	.108	.155	.130	.121
59	.865,-1	.101	.145	.207	.179	.177	.985,-1	.155	.133	.119
60	.891,-1	.806,-1	.116	.205	.164	.179	.865,-1	.149	.135	.121

Run No. 62 ; v component

	Separation Distance (m.)									
K	1	4	5	16	20	21	64	80	84	85
00	.770	.584	.539	.288	.210	.240	.163,-1	-.510,-1	-.434,-1	-.587,-1
01	.637	.506	.562	.306	.219	.244	.108,-1	-.169,-1	-.417,-1	-.594,-1
02	.559	.462	.509	.306	.222	.257	-.511,-2	-.941,-2	-.954,-2	-.529,-1
03	.521	.456	.468	.278	.262	.269	.162,-1	-.341,-2	-.123,-1	-.251,-1
04	.452	.400	.410	.287	.284	.285	.423,-1	-.640,-2	-.290,-1	-.428,-1
05	.448	.375	.400	.305	.269	.276	.427,-1	.163,-1	-.151,-1	-.401,-1
06	.430	.369	.403	.299	.236	.249	.712,-2	.240,-2	.174,-2	-.253,-1
07	.418	.334	.374	.248	.223	.236	-.334,-1	-.702,-2	.215,-1	-.273,-1
08	.394	.304	.352	.248	.211	.231	-.264,-1	.153,-1	.418,-1	.469,-2
09	.365	.302	.355	.241	.181	.213	-.419,-1	.799,-2	.366,-1	.668,-2
10	.399	.320	.374	.194	.159	.195	-.834,-2	-.635,-2	.470,-1	.132,-1
11	.390	.300	.353	.184	.167	.224	-.814,-3	-.864,-2	.460,-1	-.211,-1
12	.366	.283	.353	.175	.187	.223	.120,-1	.181,-1	.175,-1	-.365,-1
13	.376	.266	.345	.184	.180	.250	.135,-1	.139,-1	.816,-2	-.404,-1
14	.349	.238	.327	.150	.196	.242	-.671,-2	.120,-2	.364,-2	-.365,-1
15	.328	.288	.317	.143	.202	.256	-.305,-2	-.986,-2	.283,-1	-.722,-3
16	.301	.255	.283	.122	.191	.240	-.171,-1	-.103,-2	.525,-1	.190,-1
17	.305	.257	.295	.136	.187	.232	.205,-1	.685,-2	.396,-1	-.199,-2
18	.305	.240	.304	.159	.195	.253	.293,-1	.292,-1	.494,-1	.193,-1
19	.282	.266	.308	.158	.199	.246	.128,-1	.338,-1	.434,-1	.365,-1
20	.284	.232	.282	.163	.216	.254	.458,-1	.241,-1	.437,-1	.522,-1
21	.257	.241	.261	.193	.208	.254	.425,-1	.313,-1	.502,-1	.449,-1
22	.238	.240	.241	.151	.194	.221	.586,-1	.231,-1	.314,-1	.434,-1
23	.235	.211	.235	.190	.181	.218	.565,-1	.296,-1	.496,-1	.382,-1
24	.235	.197	.236	.137	.166	.216	.460,-1	.315,-1	.585,-1	.600,-1
25	.230	.180	.223	.119	.180	.212	.102,-1	.367,-1	.649,-1	.679,-1
26	.196	.183	.241	.124	.179	.213	.712,-2	.676,-1	.916,-1	.739,-1
27	.195	.218	.236	.115	.187	.242	.232,-1	.589,-1	.863,-1	.506,-1
28	.176	.227	.236	.115	.195	.242	.244,-2	.115,-1	.630,-1	.319,-1
29	.160	.190	.218	.149	.219	.239	.285,-2	.175,-1	.429,-1	.296,-1
30	.149	.196	.216	.191	.219	.248	.155,-1	.136,-1	.522,-1	.217,-1
31	.145	.184	.199	.239	.208	.235	.200,-1	.159,-1	.611,-1	.370,-1
32	.146	.151	.169	.215	.225	.249	.127,-1	.279,-1	.871,-1	.313,-1
33	.140	.125	.151	.188	.209	.188	.179,-1	.654,-2	.595,-1	.257,-1
34	.140	.127	.148	.155	.173	.160	.273,-1	-.180,-1	.506,-1	.302,-1
35	.133	.144	.152	.133	.150	.145	.349,-1	-.314,-1	.528,-1	.327,-1
36	.152	.165	.162	.104	.148	.150	.450,-1	.171,-1	.650,-1	.323,-1
37	.161	.157	.147	.112	.152	.146	.108,-1	-.129,-1	.596,-1	.178,-1
38	.157	.129	.144	.841,-1	.131	.146	.427,-2	-.278,-1	.444,-1	.704,-2
39	.152	.134	.135	.573,-1	.117	.136	.369,-1	-.404,-1	.245,-1	-.181,-2
40	.138	.973,-1	.109	.521,-1	.147	.153	.386,-1	-.435,-1	.191,-1	-.224,-1
41	.104	.944,-1	.115	.109	.125	.144	.264,-1	-.315,-1	.213,-1	-.256,-1
42	.101	.611,-1	.114	.521,-1	.108	.129	.321,-1	-.318,-1	-.260,-2	-.849,-2
43	.936,-1	.645,-1	.949,-1	.359,-1	.941,-1	.134	.380,-1	-.103,-1	.127,-1	-.188,-1
44	.975,-1	.676,-1	.962,-1	.383,-1	.854,-1	.101	.169,-1	-.113,-1	.559,-1	-.226,-1
45	.104	.669,-1	.112	.150,-1	.718,-1	.826,-1	.203,-3	.188,-2	-.850,-2	-.273,-1
46	.883,-1	.815,-1	.109	.213,-1	.592,-1	.690,-1	.157,-1	-.120,-1	-.175,-1	-.330,-1
47	.893,-1	.752,-1	.111	.148,-1	.604,-1	.718,-1	.122,-2	-.154,-1	-.694,-3	.488,-2
48	.578,-1	.362,-1	.887,-1	.943,-2	.583,-1	.601,-1	.131,-1	.240,-2	.000	.105,-1
49	.675,-1	.623,-1	.846,-1	.248,-1	.344,-1	.444,-1	-.139,-1	.993,-2	.174,-2	.163,-1
50	.738,-1	.419,-1	.699,-1	.256,-1	.752,-1	.763,-1	-.383,-1	-.531,-2	.257,-1	.993,-2
51	.567,-1	.339,-1	.496,-1	.173,-1	.642,-1	.790,-1	-.213,-1	-.890,-2	.174,-1	.488,-2
52	.178,-1	-.807,-2	.309,-1	.218,-2	.347,-1	.347,-1	.875,-2	.839,-2	.382,-1	.339,-1
53	-.125,-1	-.234,-1	.693,-2	.619,-2	.234,-1	.341,-1	.183,-1	.180,-1	.347,-1	.287,-1
54	.108,-2	-.290,-1	.325,-1	.253,-1	.576,-1	.630,-1	.396,-1	.614,-1	.833,-2	.368,-1
55	-.378,-2	.213,-1	.343,-1	.537,-1	.581,-1	.541,-1	.336,-1	.329,-1	-.139,-2	.291,-1
56	.161,-1	-.994,-2	.311,-1	.568,-1	.571,-1	.621,-1	.444,-1	.134,-1	.712,-2	.179,-1
57	.150,-1	-.839,-3	.488,-1	.551,-1	.471,-1	.486,-1	.208,-1	.312,-1	.236,-1	.218,-1
58	.147,-1	-.230,-2	.222,-1	.448,-1	.432,-1	.427,-1	.269,-1	.685,-2	.104,-1	-.867,-2
59	.249,-2	.662,-2	.165,-1	.504,-1	.216,-1	.489,-1	.773,-2	.531,-2	-.142,-1	-.255,-1
60	-.403,-2	-.113,-1	.127,-1	.319,-1	.227,-1	.313,-1	.163,-1	-.514,-2	-.677,-2	-.276,-1

Run No. 65 ; u component

K	Separation Distance (m.) 6	12	18	24	36	42	48	72	84	90
00	.542	.393	.322					.176	.475,-1	.860,-2
01	.446	.326	.303					.182	.377,-1	.493,-2
02	.389	.271	.283					.181	.141,-1	-.426,-2
03	.345	.239	.245					.154	.593,-3	-.573,-2
04	.302	.217	.202					.120	.222,-2	-.116,-1
05	.247	.192	.182					.872,-1	.117,-1	-.146,-2
06	.191	.160	.175					.651,-1	.127,-1	.104,-1
07	.152	.129	.172					.389,-1	.141,-1	-.666,-3
08	.115	.126	.162					.198,-1	.341,-2	.439,-2
09	.107	.132	.157					.166,-1	.529,-2	.121,-1
10	.107	.131	.140					.389,-2	.111,-1	.264,-1
11	.817,-1	.109	.109					-.423,-2	.385,-3	.435,-1
12	.419,-1	.831,-1	.780,-1					.118,-2	-.988,-3	.240,-1
13	.389,-1	.713,-1	.526,-1					.102,-2	-.802,-2	.343,-1
14	.148,-1	.534,-1	.480,-1					-.660,-2	-.144,-1	.413,-1
15	-.184,-1	.410,-1	.324,-1					-.272,-1	.201,-1	.429,-1
16	-.263,-1	.345,-1	.120,-1					-.374,-1	.429,-1	.304,-1
17	-.273,-1	.313,-1	.112,-1					-.377,-1	.169,-1	.218,-1
18	-.345,-1	.252,-1	-.989,-2					-.355,-1	.209,-1	.209,-1
19	-.325,-1	.102,-1	-.216,-1					-.169,-1	.305,-1	.234,-1
20	-.407,-1	-.487,-2	-.591,-1					-.237,-2	.264,-1	.146,-1
21	-.480,-1	-.519,-2	-.695,-1					.139,-1	-.578,-2	.101,-1
22	-.598,-1	-.281,-1	-.688,-1					.103,-1	-.212,-1	.932,-2
23	-.508,-1	-.242,-1	-.566,-1					.169,-1	-.447,-1	.285,-1
24	-.437,-1	-.219,-1	-.419,-1					.643,-2	-.413,-1	.334,-1
25	-.263,-1	-.201,-1	-.413,-1					.113,-1	-.904,-2	.493,-1
26	-.159,-1	-.321,-1	-.402,-1					.125,-1	-.311,-2	.509,-1
27	.594,-2	-.128,-1	-.305,-1					.162,-1	.459,-2	.435,-1
28	.181,-1	-.100,-2	-.292,-1					310,-1	.234,-1	.277,-1
29	.339,-1	-.561,-2	-.264,-1					.382,-1	.237,-1	.108,-1
30	.159,-1	-.240,-2	-.162,-2					.599,-1	.130,-1	.168,-1
31	.959,-2	.240,-2	-.324,-2					.391,-1	.756,-3	.116,-1
32	.253,-1	-.301,-2	.144,-2					.498,-	.166,-1	.196,-1
33	.437,-1	-.902,-2	.143,-1					.662,-1	.387,-1	.437,-1
34	.535,-1	-.501,-2	.286,-1					.548,-1	.610,-1	.561,-1
35	.634,-1	-.761,-2	.340,-1					.626,-1	.372,-1	.418,-1
36	.719,-1	.301,-2	.313,-1					.584,-1	.628,-1	.451,-1
37	.668,-1	.110,-1	.441,-1					.631,-1	.612,-1	.601,-1
38	.756,-1	.134,-1	.523,-1					.415,-1	.702,-1	.504,-1
39	.909,-1	.411,-1	.672,-1					.279,-1	.719,-1	.560,-1
40	.947,-1	.529,-1	.623,-1					.217,-1	.416,-1	.336,-1
41	.985,-1	.423,-1	.690,-1					-.191,-2	.163,-1	.275,-1
42	.901,-1	.642,-1	.557,-1					-.148,-1	.185,-1	.240,-1
43	.772,-1	.528,-1	.549,-1					-.210,-1	.133,-2	.163,-1
44	.602,-1	.357,-1	.727,-1					-.176,-1	-.770,-2	.107,-1
45	.498,-1	.267,-1	.682,-1					-.598,-2	-.163,-1	.152,-1
46	.326,-1	.301,-1	.564,-1					.282,-2	-.241,-1	.193,-1
47	.240,-1	.252,-1	.255,-1					-.575,-2	-.704,-1	.269,-1
48	.457,-2	.110,-1	.142,-1					-.231,-1	-.141,-1	.442,-1
49	.134,-1	-.254,-1	.324,-1					-.511,-1	-.167,-1	.529,-1
50	.348,-1	-.367,-1	.504,-1					-.658,-1	-.963,-2	.569,-1
51	.422,-1	-.190,-1	.716,-1					-.502,-1	-.978,-2	.570,-1
52	.481,-1	.521,-2	.904,-1					-.318,-1	-.444,-2	.396,-1
53	.629,-1	.321,-1	.104					-.124,-1	.519,-2	.189,-1
54	.855,-1	.509,-1	.910,-1					.254,-2	.682,-2	.288,-1
55	.916,-1	.796,-1	.623,-1					.778,-2	-.237,-2	.471,-1
56	.858,-1	.730,-1	.436,-1					-.558,-2	.444,-3	.393,-1
57	.960,-1	.536,-1	.204,-1					-.252,-1	.800,-2	.241,-1
58	.916,-1	.425,-1	-.270,-2					-.404,-1	-.175,-1	.826,-2
59	.714,-1	.141,-1	-.184,-1					-.477,-1	-.170,-1	-.966,-2
60	.489,-1	-.254,-1	-.293,-1					-.526,-1	-.147,-1	-.129,-1

Run No. 65 ; v component

Separation Distance (m.)

K	6	12	18	24	36	42	48	72	84	90
00	.145	.196	.128					.690,-1	.363,-1	.638,-2
01	.866,-1	.109	.115					.813,-1	.532,-1	.204,-1
02	.962,-1	.978,-1	.931,-1					.526,-1	.443,-1	.315,-1
03	.648,-1	.100	.854,-1					.384,-1	.214,-1	.692,-1
04	.714,-1	.803,-1	.111					.118,-1	.504,-1	.103
05	.669,-1	.755,-1	.106					.180,-1	.900,-1	.829,-1
06	.815,-1	.471,-1	.927,-1					.614,-1	.890,-1	.807,-1
07	.836,-1	.621,-1	.117					.895,-1	.715,-1	.640,-1
08	.315,-1	.685,-1	.913,-1					.112	.403,-1	.687,-1
09	.462,-1	.854,-1	.119					.911,-1	.390,-1	.351,-1
10	.819,-1	.773,-1	.144					.738,-1	.650,-1	.143,-1
11	.123	.975,-1	.121					.373,-1	.305,-1	.233,-1
12	.103	.802,-1	.907,-1					.527,-1	.160,-1	.492,-1
13	.571,-1	.589,-1	.611,-1					.378,-1	.164,-1	.855,-1
14	.393,-1	.315,-1	.104					.269,-1	.326,-1	.650,-1
15	.655,-1	.188,-1	.982,-1					.391,-1	.516,-1	.478,-1
16	.582,-1	.615,-1	.105					.169,-1	.816,-1	.162,-1
17	.219,-1	.809,-1	.114					.123,-1	.774,-1	.372,-1
18	.101,-1	.900,-1	.140					.193,-1	.624,-1	.597,-1
19	.732,-1	.828,-1	.154					.248,-1	.401,-1	.631,-1
20	.703,-1	.839,-1	.142					.312,-1	.369,-1	.742,-1
21	.863,-1	.636,-1	.124					.223,-1	.370,-1	.456,-1
22	.966,-1	.861,-1	.111					.308,-1	.211,-1	.141,-1
23	.750,-1	.586,-1	.853,-1					-.132,-3	-.783,-2	-.202,-1
24	.549,-1	.764,-1	.876,-1					-.139,-1	-.213,-1	-.778,-2
25	.237,-1	.656,-1	.745,-1					-.472,-1	-.675,-1	-.304,-1
26	.254,-1	.677,-1	.599,-1					-.509,-1	-.349,-1	-.275,-1
27	.483,-1	.301,-1	.474,-1					-.448,-1	-.219,-1	-.247,-1
28	.709,-1	.365,-3	.627,-1					-.681,-2	.256,-1	-.928,-2
29	.596,-1	-.663,-2	.783,-1					.210,-1	.311,-1	.111,-2
30	.781,-1	-.101,-1	.970,-1					.193,-2	.319,-1	.301,-1
31	.688,-1	-.618,-2	.105					-.245,-1	-.656,-2	.442,-1
32	.757,-1	.350,-1	.131					-.738,-2	.141,-1	.385,-1
33	.473,-1	.328,-1	.137					-.768,-2	-.127,-2	.103,-1
34	.870,-1	.332,-1	.129					-.488,-2	-.479,-1	-.245,-1
35	.711,-1	.609,-1	.124					.254,-1	-.362,-1	-.274,-1
36	.719,-1	.960,-1	.102					-.134,-1	-.281,-1	-.369,-1
37	.595,-1	.807,-1	.104					-.227,-1	-.130,-1	-.542,-1
38	.301,-1	.775,-1	.104					-.360,-1	-.303,-1	-.880,-1
39	.758,-1	.917,-1	.143					-.356,-1	-.621,-1	-.526,-1
40	.103	.569,-1	.149					-.159,-2	-.354,-1	-.852,-2
41	.828,-1	.785,-1	.113					.980,-2	-.444,-1	-.937,-2
42	.632,-1	.500,-1	.627,-1					.155,-1	-.919,-2	.168,-1
43	.602,-1	.403,-1	.426,-1					.401,-1	.237,-1	-.464,-2
44	.867,-1	.517,-1	.715,-1					.587,-1	.742,-1	-.234,-1
45	.973,-1	.339,-1	.103					.448,-1	.420,-1	-.211,-1
46	.157	.675,-2	.945,-1					.301,-1	.580,-2	-.946,-3
47	.170	.327,-1	.773,-1					.360,-1	.640,-2	.171,-1
48	.979,-1	.365,-1	.995,-1					.450,-1	.181,-1	.323,-1
49	.151,-1	.335,-1	.111					.380,-1	.157,-1	.235,-1
50	.119,-1	.349,-1	.985,-1					.190,-1	-.382,-2	.143,-1
51	-.138,-2	.160,-1	.703,-1					.240,-2	.406,-2	.347,-1
52	.262,-1	.562,-3	.115					.124,-1	-.109,-2	.299,-1
53	.381,-1	.107,-1	.108					.232,-1	.317,-2	.204,-2
54	.693,-1	.461,-2	.105					.643,-2	-.253,-2	.816,-2
55	.953,-1	.386,-1	.636,-1					-.149,-1	-.432,-1	.210,-1
56	.885,-1	.526,-1	.705,-1					-.227,-1	-.209,-1	.815,-2
57	.570,-1	.192,-1	.526,-1					-.369,-1	.389,-2	.164,-1
58	.620,-2	.432,-1	.577,-1					-.184,-1	.224,-1	.161,-1
59	.513,-1	.562,-2	.988,-1					-.342,-1	.107,-1	.567,-1
60	.809,-1	.473,-1	.704,-1					-.580,-1	-.387,-2	.434,-1

Run No. 66 ; u component

K	Separation Distance (m.) 6	12	18	24	36	42	48	72	84	90
00	.177	.154	.841,-1	.177	.727,-1	.121	.548,-1	.156	.112	.113
01	.114	.114	.919,-1	.150	.105	.103	.377,-1	.169	.105	.113
02	.803,-1	.815,-1	.914,-1	.117	.117	.108	.495,-1	.165	.106	.106
03	.653,-1	.737,-1	.710,-1	.669,-1	.113	.120	.703,-1	.155	.103	.854,-1
04	.552,-1	.643,-1	.794,-1	.476,-1	.116	.118	.813,-1	.168	.105	.913,-1
05	.354,-1	.291,-1	.984,-1	.566,-1	.105	.993,-1	.642,-1	.161	.886,-1	.626,-1
06	.186,-1	.410,-1	.107	.672,-1	.115	.101	.549,-1	.141	.351,-1	.575,-1
07	-.799,-3	.839,-1	.110	.304,-1	.106	.113	.917,-1	.887,-1	.255,-1	.872,-1
08	.490,-1	.839,-1	.111	.154,-2	.674,-1	.106	.828,-1	.626,-1	.409,-1	.122
09	.102	.595,-1	.115	-.629,-2	.247,-1	.112	.980,-1	.430,-1	.317,-1	.178
10	.122	.411,-1	.117	.245,-1	.290,-1	.105	.123	.495,-1	-.874,-2	.209
11	.113	.631,-1	.115	.874,-1	.213,-1	.111	.113	.176,-1	.782,-2	.214
12	.857,-1	.537,-1	.940,-1	.102	.423,-1	.949,-1	.894,-1	.191,-2	.482,-1	.207
13	.682,-1	.634,-1	.926,-1	.897,-1	.342,-1	.111	.911,-1	-.166,-1	.558,-1	.152
14	.837,-1	.796,-1	.799,-1	.718,-1	.349,-1	.987,-1	.728,-1	-.151,-1	.511,-1	.900,-1
15	.908,-1	.893,-1	.738,-1	.627,-1	.382,-1	.101	.659,-1	.210,-1	.402,-1	.191,-1
16	.918,-1	.758,-1	.607,-1	.101	.460,-1	.154	.649,-1	.315,-1	.536,-1	.439,-1
17	.102	.883,-1	.428,-1	.991,-1	.523,-1	.150	.340,-1	.262,-1	.593,-1	.110
18	.117	.126	.237,-1	.103	.908,-1	.164	.614,-2	.310,-1	.254,-1	.126
19	.112	.114	.390,-1	.111	.126	.141	-.116,-1	.176,-1	.576,-1	.119
20	.101	.839,-1	.531,-1	.107	.826,-1	.144	-.763,-2	.563,-1	.876,-1	.892,-1
21	.989,-1	.811,-1	.962,-1	.139	.614,-1	.160	.996,-2	.876,-1	.989,-1	.953,-1
22	.990,-1	.779,-1	.112	.134	.268,-1	.142	.153,-1	.818,-1	.100	.862,-1
23	.106	.685,-1	.947,-1	.150	.597,-2	.101	.192,-1	.101	.971,-1	.787,-1
24	.106	.702,-1	.880,-1	.107	-.686,-2	.101	.265,-1	.110	.101	.706,-1
25	.819,-1	.615,-1	773,-1	.102	.135,-2	.620,-1	.398,-2	.134	.117	.815,-1
26	.420,-1	.729,-1	.813,-1	.105	.165,-1	.870,-1	.421,-1	.132	.108	.585,-1
27	.225,-1	.641,-1	.871,-1	.113	.774,-1	.684,-1	.467,-1	.115	.862,-1	.477,-1
28	.617,-2	.615,-1	.866,-1	.142	.745,-1	.605,-1	.232,-1	.913,-1	.109	.511,-1
29	.815,-2	.851,-1	.859,-1	.140	.941,-1	.434,-1	.356,-1	.814,-1	.148	.222,-1
30	.881,-2	.110	.992,-1	.131	.928,-1	.445,-1	.319,-2	.868,-1	.133	.285,-1
31	.247,-1	.120	.932,-1	.686,-1	.588,-1	.458,-1	.192,-1	.967,-1	.966,-1	.565,-1
32	.273,-1	.106	.905,-1	.497,-1	.559,-1	.264,-1	.269,-1	.886,-1	.855,-1	.601,-1
33	.941,-2	.814,-1	.113	.424,-1	.385,-1	.333,-1	.535,-1	.723,-1	.778,-1	.667,-1
34	.426,-2	.543,-1	.131	.281,-1	.312,-2	.233,-1	.924,-1	.775,-1	.902,-1	.794,-1
35	.215,-1	.640,-1	.158	.144,-1	.324,-1	.216,-1	.892,-1	.121	.104	.918,-1
36	.489,-1	.664,-1	.156	.349,-1	.743,-1	.311,-1	.971,-1	.111	.742,-1	.730,-1
37	.657,-1	.574,-1	.146	.368,-1	.100	.457,-1	.763,-1	.114	.615,-1	.956,-1
38	.527,-1	.757,-1	.144	.596,-2	.913,-1	.6[illegible]4,-1	.700,-1	.814,-1	.475,-1	.102
39	.364,-1	.981,-1	.160	-.135,-1	.758,-1	.658,-1	.192,-1	.396,-1	.319,-1	.125
40	.335,-1	.772,-1	.127	-.904,-2	.635,-1	.801,-1	.570,-1	.304,-1	.418,-1	.115
41	.143,-1	.698,-1	.950,-1	-.503,-2	.937,-1	.925,-1	.8[illegible]2,-1	.607,-2	.408,-1	.954,-1
42	-.599,-3	.100	.717,-1	.155,-1	.104	.902,-1	.955,-1	.209,-1	.263,-1	.754,-1
43	.126,-1	.938,-1	.103	.284,-1	.133	.111	.102	.595,-1	.216,-1	.109
44	.456,-1	.979,-1	.162	.238,-1	.119	.121	.117	.608,-1	.334,-1	.144
45	.779,-1	.839,-1	.191	.507,-1	.109	.120	.106	.331,-1	.315,-1	.175
46	.985,-1	.101	.196	.452,-1	.120	.107	.586,-1	.295,-1	.411,-1	.173
47	.912,-1	.118	.205	.599,-1	.101	.120	.569,-1	.351,-1	.750,-1	.159
48	.707,-1	.111	.191	.308,-1	.864,-1	.861,-1	.959,-1	.724,-1	.129	.122
49	.732,-1	.112	.151	.282,-1	.562,-1	.751,-1	.866,-1	.858,-1	.138	.977,-1
50	.908,-1	.955,-1	.120	.406,-1	.726,-1	.743,-1	.353,-1	.975,-2	.129	.989,-1
51	.911,-1	.846,-1	.849,-1	.767,-1	.787,-1	.843,-1	.101,-1	-.237,-1	.997,-1	.930,-1
52	.885,-1	.973,-1	.738,-1	.811,-1	.531,-1	.956,-1	-.126,-2	-.408,-1	.962,-1	.975,-1
53	.760,-1	.113	.951,-1	.842,-1	.513,-1	.869,-1	-.889,-2	-.655,-1	.966,-1	.920,-1
54	.855,-1	.103	.137	.102	.517,-1	.967,-1	-.124,-1	-.141,-1	.101	.910,-1
55	.910,-1	.972,-1	.152	.101	.742,-1	.115	.597,-2	.292,-1	.110	.662,-1
56	.797,-1	.131	.121	.103	.661,-1	.125	.220,-1	.693,-1	.990,-1	.247,-1
57	.565,-1	.181	.112	.148	.737,-1	.159	.497,-1	.511,-1	.754,-1	.199,-1
58	.522,-1	.179	.114	.137	.794,-1	.165	.226,-1	.378,-1	.404,-1	.276,-1
59	.592,-1	.133	.101	.123	.851,-1	.125	.304,-1	.338,-1	.328,-1	.472,-1
60	.301,-1	.112	.734,-1	.149	.125	.110	.152,-1	.546,-1	.229,-1	.364,-1

Run No. 66 ; v component

Separation Distance (m.)

K	6	12	18	24	36	42	48	72	84	90
00	.306	.289	.306	.279	.308	.318	.152	.196	.177	.153
01	.25[illegible]	.263	.246	.280	.284	.324	.167	.191	.103	.160
02	.230	.259	.253	.282	.274	.316	.157	.168	.965,-1	.155
03	.195	.210	.235	.250	.281	.315	.182	.171	.111	.148
04	221	.180	.242	.258	.286	.327	.193	.170	.161	.193
05	.239	.182	.255	.242	.305	.348	.203	.178	.161	.166
06	.286	.183	.254	.209	.309	.314	.216	.147	.146	.178
07	.265	.211	.273	.212	.308	.311	.239	.164	.154	.173
08	.287	.22[illegible]	.[illegible]	.221	.326	.321	.247	.178	.159	.166
09	.251	.223	.27[illegible]	.216	.329	.310	.219	.178	.138	.144
10	.269	.232	.2[illegible]	.231	.333	.322	.220	.178	.187	.145
11	.283	.235	.24[illegible]	.253	.327	.299	.183	.166	.170	.163
12	.250	.203	.212	.258	.335	.320	.172	.172	.184	.139
13	.244	.234	.249	.265	.302	.343	.149	.171	.174	.123
14	.288	.219	.257	.263	.303	.315	.126	.164	.143	.173
15	.219	.215	.263	.266	.315	.289	.947,-1	.188	.127	.197
16	.218	.226	.238	.258	.311	.292	.979,-1	.208	.106	.177
17	.253	.226	.230	.239	.291	.288	.110	.197	.134	.156
18	.258	.241	.266	.229	.294	.293	.123	.181	.151	.148
19	.257	.[illegible]	.[illegible]	.[illegible]	.296	.289	.134	.156	.127	.143
20	.228	.227	.294	.242	.308	.303	.163	.136	.175	.170
21	.240	.251	.288	.251	.287	.307	.181	.126	.180	.175
22	.276	.252	.306	.256	.302	.319	.194	.130	.210	.178
23	.260	.240	.257	.250	.282	.315	.217	.123	.175	.165
24	.212	.261	.244	.250	.290	.346	.223	.138	.148	.142
25	.226	.261	.214	.239	.309	.324	.225	.172	.121	.154
26	.242	.229	.244	.248	.299	.315	.236	.189	.129	.173
27	.25[illegible]	.20[illegible]	.244	.254	.311	.297	.224	.173	.140	.143
28	.2[illegible]2	.219	.237	.245	.274	.306	.221	.168	.149	.150
29	.232	.217	.272	.258	.307	.296	.214	.147	.145	.176
30	.280	.201	.252	.265	.313	.283	.210	.125	.149	.211
31	.240	.228	.287	.260	.297	.290	.207	.109	.119	.184
32	.258	.243	.281	.276	.300	.313	.217	.124	.152	.169
33	.268	.301	.246	.294	.303	.322	.206	.127	.150	.142
34	.242	.273	.246	.297	.311	.318	.178	.140	.141	.169
35	.214	.263	.263	.309	.331	.312	.185	.141	.128	.192
36	.246	.283	.281	.291	.311	.299	.182	.144	.150	.212
37	.211	.259	.252	.271	.334	.272	.182	.177	.155	.195
38	.203	.241	.248	.276	.320	.275	.193	.173	.167	.182
39	.209	.243	.228	.284	.286	.303	.206	.190	.157	.158
40	.169	.236	.254	.303	.297	.316	.204	.141	.164	.168
41	.210	.209	.246	.315	.311	.294	.192	.120	.141	.168
42	.196	.258	.260	.279	.311	.286	.225	.885,-1	.163	.153
43	.244	.249	.279	.249	.277	.291	.217	.109	.152	.159
44	.266	.267	.300	.238	.261	.314	.233	.934,-1	.145	.140
45	.257	.284	.255	.225	.258	.292	.224	.116	.151	.130
46	.220	.284	.276	.205	.273	.314	.213	.125	.110	.150
47	.219	.282	.285	.218	.301	.337	.179	.126	.120	.140
48	.252	.263	.254	.244	.303	.327	.144	.962,-1	.809,-1	.167
49	.195	.239	.234	.257	.292	.303	.145	.100	.587,-1	.162
50	.215	.251	.253	.249	.269	.309	.150	.115	.106	.167
51	.185	.246	.214	.266	.262	.297	.157	.161	.164	.203
52	.229	.224	.220	.253	.307	.263	.179	.178	.198	.209
53	.23[illegible]	.230	.234	.252	.253	.255	.206	.140	.198	.173
54	.19[illegible]	.229	.255	.235	.254	.272	.199	.107	.198	.122
55	.2.1	.248	.241	.212	.266	.317	.215	.128	.163	.165
56	.182	.235	.255	.200	.279	.28[illegible]	.251	.111	.122	.200
57	.178	.260	.230	.201	.310	.276	.259	.113	.102	.139
58	.187	.272	.233	.202	.289	.283	.257	.152	.147	.194
59	.207	.258	.222	.192	.316	.271	.251	.188	.163	.130
60	.2.1	.260	.261	.196	.321	.298	.245	.212	.170	.123

Run No. 67 ; u component

Separation Distance (m.)

K	1	4	5	10	20	21	34	50	84	85
00	.492	.413,-1	.715,-1	.300,-1	.157	.100	-.956,-1	.750,-1	.420,-1	.180,-1
01	.419	.515,-1	.584,-1	.115	.170	.133	-.495,-1	.751,-1	.425,-1	-.144,-1
02	.340	.752,-1	.717,-1	.112	.163	.154	-.268,-1	.529,-1	.156,-1	-.343,-1
03	.274	.711,-1	.703,-1	.981,-1	.152	.150	-.193,-1	-.317,-2	-.580,-3	-.579,-1
04	.205	.844,-1	.683,-1	.937,-1	.151	.159	-.153,-2	.223,-2	.187,-2	-.554,-1
05	.159	.104	.554,-1	.846,-1	.145	.170	-.103,-2	.128,-1	.147,-1	-.409,-1
06	.135	.110	.396,-1	.793,-1	.119	.150	.177,-1	.417,-1	.368,-1	-.274,-2
07	.120	.902,-1	.319,-1	.878,-1	.849,-1	.125	.381,-1	.575,-1	.483,-1	.680,-2
08	.776,-1	.792,-1	.444,-1	.804,-1	.748,-1	.115	.807,-1	.261,-1	.669,-1	.345,-2
09	.333,-1	.663,-1	.372,-1	.815,-1	.650,-1	.106	.760,-1	.149,-1	.566,-1	.151,-1
10	.223,-1	.380,-1	.202,-1	.901,-1	.669,-1	.995,-1	.522,-1	.167,-1	.311,-1	.286,-1
11	.211,-1	.157,-1	.210,-1	.955,-1	.674,-1	.844,-1	.410,-1	.547,-1	.495,-1	.330,-1
12	.275,-1	-.522,-2	.159,-1	.793,-1	.567,-1	.653,-1	.155,-1	.604,-1	.597,-1	.517,-1
13	.514,-1	.509,-2	-.405,-2	.108	.619,-1	.589,-1	.319,-1	.400,-1	.726,-1	.408,-1
14	.595,-1	.211,-1	-.130,-1	.867,-1	.715,-1	.551,-1	.260,-1	.123,-1	.892,-1	.503,-1
15	.461,-1	.951,-2	-.225,-2	.701,-1	.957,-1	.584,-1	.276,-1	-.825,-2	.852,-1	.500,-1
16	.393,-1	.111,-1	.269,-1	.408,-1	.111	.646,-1	.713,-3	-.133,-1	.670,-1	.226,-1
17	.609,-1	.331,-1	.818,-2	.151,-1	.110	.815,-1	-.329,-1	-.299,-1	.604,-1	.152,-1
18	.690,-1	.257,-1	-.452,-2	.288,-1	.102	.895,-1	-.637,-1	-.457,-1	.295,-1	.868,-2
19	.426,-1	.102,-1	.382,-2	423,-1	.102	.105	-.980,-1	-.214,-1	.265,-1	-.492,-2
20	.514,-1	.288,-1	.754,-2	.676,-1	.915,-1	.132	-.124	-.128,-1	.471,-2	-.480,-1
21	.493,-1	.424,-1	-.188,-1	.595,-1	.102	.117	-.108	.272,-2	-.141,-1	-.420,-1
22	.357,-1	.651,-1	.184,-1	.334,-1	.952,-1	.136	-.976,-1	.400,-1	-.178,-1	-.113,-1
23	.16 ,-1	.848,-1	.519,-1	.305,-1	.813,-1	.123	-.101	.494,-1	-.530,-1	-.277,-1
24	-.691,-2	.102	.643,-1	.898,-2	.764,-1	.126	-.116	.254,-1	-.312,-1	-.631,-1
25	-.351,-1	.887,-1	.946,-1	-.431,-2	.707,-1	.915,-1	-.114	-.173,-1	-.203,-1	-.686,-1
26	-.462,-1	.902,-1	.917,-1	-.159,-1	.450,-1	.108	-.945,-1	.206,-1	-.346.-2	-.805,-1
27	-.523,-1	.720,-1	.721,-1	.102,-1	.153,-1	.110	-.742,-1	.387,-1	.395,-2	-.831,-1
28	-.699,-1	.839,-1	.862,-1	.295,-1	.922,-2	.738,-1	-.470,-1	.157,-1	.122,-1	-.743,-1
29	-.739,-1	.909,-1	.104	.614,-2	.192,-1	.520,-1	-.411,-1	.206,-1	.344,-1	-.659,-1
30	-.885,-1	.115	.983,-1	.256,-1	.508,-1	.557,-1	-.749,-1	.399,-1	-.936,-4	-.452,-1
31	-.707,-1	.131	.117	.288,-1	.791,-1	.861,-1	-.866,-1	.432,-1	.165,-1	-.248,-1
32	-.530,-1	.138	.958,-1	.318,-1	.708,-1	.750,-1	-.794,-1	.334,-1	.223,-1	-.122,-1
33	-.114,-1	.135	.881,-1	.432,-1	.416,-1	.600,-1	-.415,-1	.299,-1	.446,-1	.148,-1
34	.845,-2	.127	.840,-1	.295,-1	.415,-1	.227,-1	-.157,-1	.406,-1	.346,-1	-.139,-1
35	.145,-1	.132	.864,-1	-.641,-3	.167,-1	.118,-1	-.682,-2	.536,-1	.131,-2	.242,-2
36	-.268,-1	.128	.954,-1	.541,-2	.166,-1	.326,-1	-.153,-2	.456,-1	-.186,-1	-.213,-1
37	-.414,-1	.118	.850,-1	.130,-1	.355,-1	.627,-1	-.242,-1	.126,-1	-.318,-1	-.391,-1
38	-.381,-1	.802,-1	.708,-1	.301,-1	.358,-1	.936,-1	-.175,-1	.314,-2	-.491,-1	-.558,-1
39	-.448,-1	.802,-1	.605,-1	.394,-2	.338,-1	.859,-1	-.192,-1	-.136,-1	-.673,-1	-.753,-1
40	-.411,-1	.836,-1	.705,-1	.181,-1	.277,-1	.684,-1	-.129,-1	-.355,-1	-.935,-1	-.975,-1
41	-.302,-1	.731,-1	.609,-1	.760,-2	.474,-1	.718,-1	-.134,-1	-.230,-1	-.943,-1	-.103
42	-.368,-2	.701,-1	.702,-1	425,-1	.609,-1	.632,-1	-.525,-1	.175,-1	-.100	-.116
43	.230,-1	.769,-1	.855,-1	.793,-1	.783,-1	.818,-1	-.510,-1	.180,-1	-.977,-1	-.165
44	.583,-1	.803,-1	.101	.102	.852,-1	.628,-1	-.594,-1	.168,-1	-.916,-1	-.180
45	.444,-1	.595,-1	.985,-1	.120	.592,-1	.673,-1	-.577,-1	.266,-1	-.961,-1	-.169
46	.207,-1	.399,-1	.970,-1	.140	.429,-1	.611,-1	-.429,-1	.439,-1	-.616,-1	-.114
47	.158,-1	.135,-1	.841,-1	.127	.458,-1	.430,-1	-.570,-1	.345,-1	-.378,-1	-.883,-1
48	.160,-1	.167,-1	.593,-1	.955,-1	.600,-1	.378,-1	-.476,-1	.358,-1	-.496,-2	-.525,-1
49	-.413,-2	.615,-2	.422,-1	.766,-1	.407,-1	.935,-1	-.203,-1	.233,-1	-.496,-2	-.300,-1
50	-.161,-1	-.556,-2	.337,-1	.770,-1	.304,-1	.100	-.176,-1	.320,-2	.655,-3	-.238,-2
51	-.333,-1	.573, 2	.114,-1	.680,-1	.301,-1	.870,-1	-.473,-1	.157,-1	.117,-1	.110,-1
52	-.376,-1	.354,-1	.118,-1	.771,-1	.352,-1	.913,-1	-.402,-1	-.650,-2	.767,-2	-.164,-1
53	-.530,-1	.552,-1	.452,-2	.102	.453,-1	.819,-1	-.123,-1	.728,-2	.102,-1	-.587,-1
54	- 613,-1	.351,-1	-.286,-1	.130	.415,-1	.747,-1	-.350,-1	.163,-1	-.115,-1	-.794,-1
55	-.542,-1	.315,-1	-.769,-2	.108	.354,-1	.597,-1	-.106,-1	.237,-1	-.197,-1	-.748,-1
56	-.330,-1	.424,-1	-.172,-1	.103	.344,-1	.693,-1	-.367,-2	.707,-2	-.175,-1	-.586,-1
57	-.158,-1	.443,-1	-.318,-1	.960,-1	.511,-1	.815,-1	-.374,-1	.129,-1	-.715,-2	-.477,-1
58	.278,-2	.429,-1	-.300,-1	.800,-1	.515,-1	.842,-1	-.580,-1	.446,-2	-.336,-1	-.101,-1
59	.392,-1	.541,-1	-.255,-1	.561,-1	.480,-1	.647,-1	-.740,-1	.602,-2	-.243,-1	-.307,-1
60	.675,-1	.556,-1	-.204,-1	.560,-1	.728,-1	.744,-1	-.806,-1	.320,-2	-.484,-1	-.199,-1

Run No. 67 ; v component

Separation Distance (m.)

K	1	4	5	16	20	21	64	80	84	85
00	.147	.161	.222	.269	.760,-1	.185	.276	.290	-.939,-2	.185
01	.106	.160	.236	.273	.488,-1	.201	.270	.286	.329,-1	.150
02	.368,-1	.170	.246	.262	.432,-1	.225	.249	.294	.450,-1	.148
03	.246,-1	.161	.248	.248	.515,-1	.219	.261	.291	.551,-1	.180
04	.141,-1	.159	.235	.235	.468,-1	.195	.258	.298	.760,-1	.196
05	.247,-2	.156	.217	.224	.265,-1	.167	.249	.296	.593,-1	.159
06	-.104,-1	.146	.228	.213	.157,-1	.169	.236	.290	.522,-1	.152
07	.162,-1	.154	.237	.199	.256,-1	.158	.230	.285	.233,-1	.150
08	.524,-2	.141	.248	.196	.241,-1	.151	.237	.277	.459,-1	.119
09	.705,-2	.133	.236	.193	.129,-1	.142	.244	274	.379,-1	.117
10	-.183,-1	.119	.235	.209	.146,-1	.134	.256	.287	.490,-1	.151
11	-.502,-1	.118	.226	.222	.130,-1	.120	.273	.290	.786,-1	.184
12	-.497,-1	.117	.213	.233	.143,-1	.124	.286	.278	.826,-1	.185
13	-.479,-1	.108	.212	.230	.214,-1	.143	.280	.279	.982,-1	.209
14	-.494,-1	.112	.204	.229	.542,-1	.170	.265	.288	.104	.218
15	-.389,-1	.110	.204	.236	.667,-1	.181	.251	.288	.726,-1	.208
16	-.514,-1	.889,-1	.190	.254	.697,-1	.170	.245	.263	.633,-1	.178
17	-.506,-1	.864,-1	.205	.279	.793,-1	.147	.239	.251	.647,-1	.159
18	-.407,-1	.986,-1	.203	.300	.916,-1	.143	.238	.243	.697,-1	.174
19	-.540,-1	.102	.207	.318	.112	.171	.237	.237	.616,-1	.153
20	-.819,-1	.102	.173	.329	.864,-1	.173	.231	.250	.540,-1	.108
21	-.767,-1	.113	.142	.347	.112	.171	.235	.254	.569,-1	.898,-1
22	-.791,-1	.116	.113	.352	.105	.170	.241	.256	.465,-1	.124
23	-.603,-1	.134	.113	.362	.107	.157	.242	.259	.633,-1	.194
24	-.863,-1	.139	.119	.361	.120	.151	.201	.259	.566,-1	.213
25	-.577,-1	.136	.113	.360	.145	.162	.198	.266	.540,-1	.211
26	-.524,-1	.123	.105	.353	.152	.166	.190	.270	.588,-1	.184
27	-.711,-1	.108	.103	.338	.137	.175	.190	.251	.245,-1	.161
28	-.702,-1	.114	.107	.330	.125	.176	.206	.245	-.559,-2	.139
29	-.344,-1	.112	.999,-1	.319	.113	.162	.220	.243	-.134,-1	.135
30	-.442,-1	.108	.107	.314	.137	.159	.212	.241	-.137,-3	.146
31	-.682,-1	.127	.101	.306	.122	.157	.192	.249	.127,-1	.141
32	-.788,-1	.137	.126	.300	.125	.159	.227	.256	.313,-1	.151
33	-.877,-1	.148	.141	.276	.981,-1	.169	.220	.265	.760,-1	.165
34	-.587,-1	.136	.128	.268	.947,-1	.182	.226	.260	.527,-1	.153
35	-.481,-1	.136	.119	.261	.977,-1	.180	.223	.277	.327,-1	.139
36	-.577,-1	.137	.110	.257	.974,-1	.167	.188	.295	.184,-1	.120
37	-.407,-1	.154	.118	.251	.938,-1	.184	.168	.298	.512,-2	.143
38	-.146,-1	.149	.132	.234	.864,-1	.184	.177	.284	.102,-1	.154
39	.105,-1	.148	.159	.226	.104	.137	.178	.284	.108,-1	.152
40	-.175,-1	.137	.150	.216	.757,-1	.109	.191	.284	.228,-1	.165
41	-.492,-1	.136	.145	.224	.745,-1	.113	.199	.268	.595,-1	.166
42	-.568,-1	.126	.148	.237	.683,-1	.130	.213	.245	.532,-1	.145
43	-.978,-1	.118	.143	.242	.615,-1	.154	.201	.233	.343,-1	.137
44	-.109	.968,-1	.132	.263	.922,-1	.154	.203	.223	.289,-1	.135
45	-.825,-1	.701,-1	.115	.281	.113	.149	.197	.225	.404,-1	.197
46	-.516,-1	.504,-1	.121	.297	.113	.152	.186	.217	.615,-1	.167
47	-.531,-1	.260,-1	.110	.308	.115	.117	.173	.208	.455,-1	.148
48	-.850,-1	.103,-1	.889,-1	.322	.126	.110	.160	.209	.513,-1	.162
49	-.731,-1	.125,-1	.698,-1	.313	.156	.122	.155	.229	.628,-1	.147
50	-.651,-1	.400,-1	.772,-1	.303	.178	.118	.159	.240	.627,-1	.135
51	-.665,-1	.617,-1	.110	.288	.209	.136	.165	.242	.755,-1	.961,-1
52	-.948,-1	.811,-1	.121	.282	.170	.126	.178	.245	.805,-1	.116
53	-.127	.105	.130	.278	.151	.118	.201	.259	.944,-1	.142
54	-.118	.118	.137	.277	.147	.112	.195	.261	.114	.139
55	-.957,-1	.136	.136	.280	.135	.111	.210	.249	.112	.153
56	-.504,-1	.146	.129	.293	.127	.130	.199	.228	.134	.168
57	-.680,-1	.135	.100	.285	.105	.136	.207	.222	.130	.150
58	-.233,-1	.154	.817,-1	.274	.126	.124	.197	.208	.837,-1	.156
59	-.463,-1	.177	.861,-1	.250	.103	.959,-1	.199	.212	.626,-1	.144
60	-.277,-1	.194	.105	.245	.130	.643,-1	.171	.209	.952,-1	.138

Run No. 56 ; u component

	Separation Distance (m.)									
K	1	2	5	10	20	21	64	82	84	85
00	.735	.475	.524	.520	.440	.450	.425	.417	.394	.415
01	.689	.475	.519	.509	.453	.430	.429	.417	.387	.404
02	.591	.493	.510	.474	.477	.475	.442	.417	.372	.371
03	.535	.507	.512	.500	.497	.496	.448	.409	.363	.357
04	.495	.503	.497	.515	.451	.504	.441	.410	.348	.350
05	.450	.488	.495	.505	.494	.507	.411	.415	.344	.343
06	.434	.491	.482	.498	.493	.487	.401	.410	.348	.336
07	.414	.489	.485	.503	.503	.485	.390	.404	.359	.352
08	.419	.482	.453	.513	.502	.495	.384	.419	.372	.365
09	.421	.469	.436	.512	.485	.484	.383	.440	.372	.367
10	.389	.459	.433	.501	.474	.468	.357	.446	.370	.369
11	.372	.449	.445	.499	.459	.457	.352	.438	.374	.361
12	.381	.431	.431	.503	.465	.444	.347	.422	.369	.349
13	.387	.408	.413	.501	.480	.429	.345	.419	.370	.353
14	.391	.398	.393	.478	.458	.431	.351	.419	.366	.350
15	.392	.399	.388	.458	.455	.440	.373	.434	.348	.351
16	.377	.392	.364	.443	.[illegible]55	.453	.354	.418	.346	.352
17	.377	.386	.378	.428	.466	.451	.355	.404	.332	.340
18	.371	.387	.388	.428	.454	.437	.357	.358	.326	.341
19	.383	.398	.375	.420	.458	.412	.345	.406	.307	.340
20	.385	.403	.364	.414	.410	.383	.338	.400	.294	.343
21	.376	.420	.370	.430	.402	.381	.336	.397	.289	.337
22	.373	.448	.406	.440	.422	.399	.329	.404	.295	.326
23	.366	.451	.434	.451	.434	.399	.342	.413	.300	.320
24	.359	.428	.430	.440	.428	.376	.365	.411	.312	.331
25	.356	.420	.440	.444	.411	.382	.366	.410	.323	.344
26	.357	.411	.436	.438	.386	.379	.367	.418	.332	.364
27	.351	.417	.432	.436	.396	.382	.352	.416	.337	.375
28	.354	.415	.418	.428	.391	.386	.351	.407	.339	.381
29	.340	.397	.406	.405	.392	.382	.349	.386	.334	.389
30	.332	.390	.403	.395	.393	.376	.354	.403	.345	.393
31	.328	.393	.398	.399	.403	.385	.363	.413	.367	.415
32	.331	.391	.389	.412	.391	.396	.354	.415	.380	.418
33	.334	.37	.393	.415	.380	.385	.342	.401	.389	.400
34	.328	.371	.394	.411	.376	.369	.350	.409	.377	.391
35	.312	.366	.400	.410	.376	.377	.345	.403	.365	.389
36	.314	.355	.394	.400	.379	.378	.341	.378	.346	.359
37	.300	.351	.383	.404	.384	.390	.350	.383	.344	.361
38	.315	.343	.379	.407	.383	.384	.370	.394	.333	.344
39	.322	.351	.394	.406	.393	.384	.378	.400	.309	.321
40	.329	.369	.421	.407	.387	.392	.379	.389	.280	.309
41	.334	.341	.427	.417	.373	.375	.365	.384	.271	.294
42	.339	.335	.413	.414	.352	.357	.366	.367	.278	.310
43	.360	.351	.395	.412	.352	.358	.353	.365	.275	.312
44	.361	.365	.393	.412	.364	.344	.353	.371	.257	.294
45	.361	.376	.406	.412	.367	.368	.340	.378	.264	.301
46	.350	.379	.416	.407	.357	.394	.340	.393	.278	.317
47	.346	.364	.428	.392	.360	.391	.345	.395	.288	.304
48	.332	.376	.437	.382	.376	.377	.354	.382	.283	.287
49	.324	.366	.438	.379	.374	.369	.340	.383	.292	.302
50	.346	.362	.414	.376	.360	.365	.341	.389	.289	.318
51	.360	.359	.378	.380	.356	.356	.345	.392	.299	.314
52	.356	.351	.368	.371	.366	.343	.350	.382	.297	.313
53	.338	.330	.374	.374	.362	.332	.364	.380	.291	.295
54	.333	.316	.395	.390	.360	.326	.361	.384	.281	.276
55	.315	.329	.403	.409	.366	.334	.351	.389	.278	.267
56	.296	.335	.398	.412	.358	.339	.351	.383	.279	.277
57	.268	.339	.383	.397	.368	.362	.341	.386	.283	.290
58	.271	.322	.371	.381	.379	.370	.355	.396	.287	.292
59	.282	.304	.359	.374	.383	.381	.372	.394	.278	.280
60	.294	.312	.358	.387	.386	.375	.379	.379	.281	.278

Run No. 68 ; v component

	Separation Distance (m.)									
K	1	4	5	16	20	21	64	80	84	85
00	.220	.182	.765,-1	.218	.584,-1	-.238,-1	-.286,-1	-.274,-1	-.250,-1	.122
01	.207	.203	.100	.217	.773,-1	-.515,-1	-.327,-1	-.304,-1	.298,-2	.116
02	.169	.199	.106	.212	.107	-.777,-1	-.394,-1	-.482,-1	.176,-1	.763,-1
03	.143	.205	.129	.207	.143	-.640,-1	-.609,-1	-.807,-1	.122,-1	.151,-1
04	.137	.195	.143	.212	.152	-.725,-2	-.407,-1	-.116	.194,-2	.748,-2
05	.131	.199	.155	.211	.152	.238,-1	-.229,-1	-.131	-.124,-1	-.296,-2
06	.138	.212	.147	.206	.131	.622,-1	-.386,-1	-.130	-.331,-1	.105,-1
07	.103	.225	.132	.205	.108	.918,-1	-.697,-1	-.101	-.340,-1	-.514,-3
08	.695,-1	.241	.120	.209	.995,-1	.121	-.746,-1	-.750,-1	-.168,-1	.727,-2
09	.682,-1	.245	.121	.210	.104	.116	-.650,-1	-.404,-1	-.174,-1	.142,-1
10	.760,-1	.238	.118	.200	.110	.111	-.391,-1	-.320,-2	-.305,-1	-.685,-3
11	.727,-1	.228	.129	.185	.118	.108	-.239,-1	.252,-1	-.444,-1	.152,-1
12	.719,-1	.226	.148	.168	.104	.103	-.100,-1	.137,-1	-.482,-1	-.152,-1
13	.895,-1	.232	.136	.153	.101	.560,-1	-.318,-1	-.199,-2	-.607,-1	-.202,-1
14	.110	.241	.132	.131	.104	.243,-1	-.279,-1	-.106,-1	-.695,-1	-.352,-1
15	.872,-1	.255	.125	.120	.113	.203,-1	-.268,-1	-.102,-2	-.537,-1	-.197,-1
16	.757,-1	.265	.118	.123	.119	.525,-1	-.286,-1	.523,-2	-.200,-1	-.467,-3
17	.431,-1	.253	.110	.146	.134	.694,-1	-.325,-1	-.134,-1	-.695,-2	.415,-1
18	.235,-1	.241	.105	.167	.165	.810,-1	-.246,-1	-.510,-2	-.570,-2	.450,-1
19	.864,-2	.227	.113	.194	.182	.657,-1	-.189,-1	-.179,-2	-.261,-1	-.138,-1
20	.670,-2	.224	.109	.203	.166	.849,-1	-.872,-2	.283,-1	-.367,-1	-.530,-1
21	.149,-1	.216	.118	.191	.151	.822,-1	.133,-1	.173,-1	-.112,-1	-.779,-3
22	.164,-1	.191	.125	.173	.127	.628,-1	.412,-2	-.781,-2	-.362,-1	.649,-2
23	-.132,-1	.178	.118	.144	.120	.374,-1	.000	-.339,-1	-.373,-1	-.112,-1
24	-.203,-1	.154	.977,-1	.136	.986,-1	.469,-1	-.780,-2	-.587,-1	-.338,-1	.841,-3
25	-.734,-2	.129	.785,-1	.128	.964,-1	.665,-1	.637,-2	-.434,-1	-.248,-1	-.199,-1
26	.648,-2	.113	.678,-1	.119	.112	.375,-1	.559,-2	-.360,-1	-.156,-1	.592,-3
27	.270,-1	.102	.775,-1	.129	.110	.574,-1	.507,-2	-.393,-1	.000	.193,-1
28	.447,-1	.107	.636,-1	.131	.127	.807,-1	-.163,-1	-.366,-1	.323,-1	.227,-1
29	.853,-1	.113	.683,-1	.134	.127	.109	-.319,-1	-.295,-1	.318,-1	.148,-1
30	.101	.127	.796,-1	.139	.115	.111	-.163,-1	-.420,-1	.129,-1	.872,-2
31	.860,-1	.140	.975,-1	.137	.935,-1	.110	-.770,-2	-.554,-1	-.151,-1	.420,-3
32	.767,-1	.139	.820,-1	.140	.719,-1	.755,-1	.202,-2	-.649,-1	-.183,-1	.239,-1
33	.531,-1	.144	.830,-1	.140	.629,-1	.480,-1	-.523,-2	-.842,-1	.133,-1	.269,-1
34	.121,-1	.161	.955,-1	.149	.638,-1	.313,-1	-.292,-1	-.883,-1	.108,-1	.480,-2
35	.540,-2	.173	.874,-1	.166	.891,-1	.221,-1	-.527,-1	-.809,-1	-.731,-3	.226,-2
36	-.886,-2	.178	.756,-1	.156	.116	.509,-2	-.497,-1	-.960,-1	.198,-1	.483,-2
37	-.108,-1	.182	.723,-1	.145	.149	-.189,-1	-.481,-1	-.111	.250,-1	.162,-1
38	-.227,-1	.184	.460,-1	.134	.171	-.772,-2	-.527,-1	-.105	.157,-2	-.176,-1
39	-.353,-1	.187	.426,-1	.127	.159	-.425,-2	-.641,-1	-.894,-1	-.537,-1	-.347,-1
40	-.313,-1	.196	.292,-1	.121	.142	.274,-1	-.902,-1	-.923,-1	-.879,-1	-.280,-2
41	-.778,-2	.200	.325,-1	.134	.129	.454,-1	-.813,-1	-.938,-1	-.806,-1	.497,-1
42	.243,-1	.198	.260,-1	.158	.123	.469,-1	-.589,-1	-.979,-1	-.781,-1	.830,-1
43	.325,-1	.188	.173,-1	.155	.125	.469,-1	-.132,-1	-.418,-1	-.911,-1	.766,-1
44	.514,-1	.166	.300,-1	.138	.113	.387,-1	.109,-1	-.286,-1	-.103	.337,-1
45	.551,-1	.131	.502,-1	.122	.936,-1	.614,-2	.553,-2	-.241,-1	-.118	-.432,-1
46	.412,-1	.117	.589,-1	.109	.674,-1	-.567,-2	-.780,-2	-.325,-1	-.102	-.565,-1
47	.978,-2	.104	.734,-1	.891,-1	.517,-1	.720,-2	-.269,-1	-.276,-1	-.825,-1	-.562,-1
48	-.217,-1	.944,-1	.958,-1	.722,-1	.388,-1	-.478,-2	-.330,-1	-.165,-1	-.619,-1	-.457,-1
49	-.160,-1	.803,-1	.966,-1	.571,-1	.270,-1	.536,-2	-.355,-1	-.332,-1	-.298,-1	-.296,-2
50	-.348,-1	.707,-1	.970,-1	.512,-1	.260,-1	.109,-2	-.664,-1	-.307,-1	-.114,-1	.245,-1
51	-.188,-1	.654,-1	.104	.550,-1	.230,-1	.646,-2	-.926,-1	-.395,-1	-.606,-2	.175,-1
52	-.333,-1	.628,-1	.900,-1	.648,-1	.324,-1	-.243,-2	-.872,-1	-.640,-1	-.223,-1	-.245,-1
53	-.277,-1	.626,-1	.879,-1	.978,-1	.144,-1	-.781,-2	-.580,-1	-.941,-1	-.181,-1	-.402,-1
54	-.146,-1	.101	.869,-1	.144	-.451,-3	-.399,-1	-.376,-1	-.118	-.444,-1	-.433,-1
55	.162,-2	.109	.595,-1	.170	.721,-3	-.442,-1	-.305,-1	-.128	-.458,-1	.629,-2
56	.690,-2	.113	.606,-1	.191	.487,-2	-.126,-1	-.281,-1	-.131	-.661,-1	.679,-2
57	.844,-2	.108	.507,-1	.188	.112,-1	.882,-2	-.564,-1	-.102	-.916,-1	-.114,-1
58	.194,-1	.947,-1	.335,-1	.153	.152,-1	.519,-1	-.597,-1	-.898,-1	-.102	-.293,-1
59	.384,-2	.895,-1	.110,-1	.124	.210,-1	.710,-1	-.607,-1	-.709,-1	-.268,-1	-.375,-1
60	.691,-2	.856,-1	.199,-1	.116	.936,-2	.703,-1	-.653,-1	-.438,-1	-.825,-1	-.425,-1

TABLE 17.9

Smoothed cospectral density estimates, UC_n, identified by eddy wind component; harmonic number, n; and separation distance of anemometer pairs. (Pages 548 to 609.) Units are m^2/sec^2/unit frequency interval for all data except Runs 7 and 8 which are in units of percent of covariance/ unit frequency interval. To convert n to a cyclical frequency, multiply by 1/128 cycles/second.

Run No. 6 ; u component

	Separation Distance (m_s)									
N	6	12	18	24	36	42	48	72	84	90
00	.151	.104	.104	.899,-1	.120	.122	.122	.841,-1	.105	.105
01	.129	.929,-1	.890,-1	.847,-1	.101	.982,-1	.104	.554,-1	.684,-1	.676,-1
02	.954,-1	.728,-1	.677,-1	.712,-1	.689,-1	.654,-1	.693,-1	.280,-1	.298,-1	.308,-1
03	.726,-1	.601,-1	.521,-1	.472,-1	.426,-1	.416,-1	.403,-1	.154,-2	-.130,-2	-.399,-3
04	.580,-1	.535,-1	.451,-1	.347,-1	.243,-1	.248,-1	.128,-1	-.257,-1	-.263,-1	-.208,-1
05	.562,-1	.504,-1	.477,-1	.254,-1	.155,-1	.190,-1	.363,-2	-.231,-1	-.337,-1	-.234,-1
06	.449,-1	.338,-1	.356,-1	.196,-1	.116,-1	.140,-1	.127,-3	-.124,-1	-.234,-1	-.168,-1
07	.273,-1	.155,-1	.191,-1	.946,-2	.298,-2	.450,-2	-.705,-2	-.209,-2	-.340,-2	-.264,-2
08	.232,-1	.108,-1	.140,-1	.886,-2	-.201,-2	.844,-3	-.105,-1	.148,-2	.259,-2	.267,-2
09	.221,-1	.112,-1	.117,-1	.120,-1	-.254,-2	.179,-2	-.102,-1	-.521,-3	.580,-2	.246,-2
10	.163,-1	.784,-2	.577,-2	.881,-2	-.912,-3	.474,-3	-.729,-2	-.495,-3	.998,-2	.355,-2
11	.140,-1	.509,-2	.642,-2	.287,-2	-.119,-2	-.182,-2	-.535,-2	-.527,-3	.954,-2	.518,-2
12	.137,-1	.605,-2	.105,-1	-.726,-3	-.116,-2	-.131,-2	-.940,-3	.617,-3	.599,-2	.259,-2
13	.106,-1	.442,-2	.816,-2	.679,-3	-.174,-2	.569,-3	-.221,-2	.417,-2	.268,-2	.312,-3
14	.649,-2	.199,-2	.563,-2	.202,-2	-.219,-2	.864,-3	-.279,-2	.538,-2	-.142,-3	.297,-2
15	.597,-2	-.385,-3	.280,-2	.162,-2	-.230,-2	-.237,-2	-.488,-3	.567,-2	-.267,-2	.188,-2
16	.518,-2	-.159,-2	.284,-2	.245,-2	-.232,-2	-.305,-2	.865,-3	.215,-2	-.216,-2	-.841,-3
17	.639,-2	-.202,-2	.341,-2	.257,-2	-.124,-2	.136,-2	.605,-3	-.984,-3	.151,-2	.131,-2
18	.469,-2	-.606,-3	.311,-2	.186,-3	.543,-4	.228,-2	.211,-2	.919,-4	.243,-2	.594,-2
19	.428,-2	.548,-3	.185,-2	-.247,-2	.149,-2	.653,-3	.361,-2	-.115,-2	.458,-3	.347,-2
20	.467,-2	-.146,-2	-.176,-3	-.334,-2	.232,-2	.183,-2	.197,-2	-.572,-3	-.100,-2	.147,-2
21	.469,-2	-.312,-2	-.233,-3	-.157,-2	.833,-3	.297,-2	-.114,-2	-.852,-3	-.905,-3	-.431,-3
22	.514,-2	-.374,-2	-.507,-3	-.815,-3	.328,-5	.391,-2	-.160,-2	-.105,-2	.334,-3	-.198,-2
23	.437,-2	-.440,-2	-.129,-2	-.194,-2	.795,-3	.243,-2	-.399,-3	.769,-3	.258,-3	-.173,-2
24	.195,-2	-.405,-2	.493,-3	-.239,-2	.989,-3	.797,-4	-.600,-3	.187,-2	-.113,-4	.132,-3
25	.196,-2	-.322,-2	.293,-3	-.161,-2	.154,-2	.389,-3	-.408,-3	.202,-2	-.534,-3	.193,-4
26	.249,-2	-.237,-2	.590,-3	-.213,-2	.757,-3	.413,-3	.113,-2	-.420,-3	.898,-3	.119,-2
27	.305,-2	-.279,-2	.148,-3	-.194,-2	.977,-3	.100,-2	.192,-3	-.121,-2	.259,-2	.330,-2
28	.199,-2	-.305,-2	.469,-3	-.600,-3	.127,-2	.238,-3	-.811,-3	.353,-4	.889,-3	.281,-2
29	.100,-2	-.154,-2	-.308,-4	.109,-2	.107,-2	-.315,-3	.261,-3	.761,-3	-.863,-3	.193,-2
30	.107,-2	-.669,-3	-.615,-3	.149,-2	.951,-3	.385,-4	-.289,-3	.902,-3	-.511,-3	.341,-2
31	.109,-2	-.165,-2	.623,-4	.645,-3	.140,-2	.271,-2	-.158,-3	.138,-3	.121,-2	.228,-2
32	.551,-3	-.138,-2	.236,-3	-.167,-3	.130,-2	.154,-2	.796,-3	-.108,-2	.586,-3	-.248,-3
33	.126,-3	-.264,-3	-.170,-2	.909,-4	.981,-3	-.142,-2	.739,-3	-.357,-3	-.931,-3	-.522,-3
34	-.598,-3	.462,-3	-.192,-2	.108,-2	.849,-3	-.104,-2	.163,-2	.511,-4	-.269,-3	-.345,-3
35	-.191,-2	-.239,-3	-.179,-3	.463,-3	.930,-3	-.596,-3	.130,-2	-.198,-3	-.472,-3	-.145,-3
36	-.136,-2	-.174,-2	.572,-3	-.131,-2	.653,-3	-.856,-3	.111,-2	.885,-3	-.938,-3	-.172,-3
37	-.822,-3	-.146,-2	-.796,-3	-.280,-3	.623,-3	-.121,-2	.242,-2	.115,-2	-.654,-4	-.102,-2
38	-.869,-3	-.498,-3	-.193,-2	.111,-2	.266,-3	-.109,-2	.137,-2	.391,-3	.143,-3	-.206,-3
39	-.803,-3	-.423,-4	-.150,-2	.634,-3	-.105,-3	-.167,-2	-.260,-3	-.619,-3	.637,-4	.323,-3
40	-.935,-3	.734,-3	-.107,-2	.328,-3	.184,-3	-.162,-3	-.546,-3	-.226,-2	.348,-3	.497,-3
41	-.925,-3	.407,-3	-.885,-3	.955,-3	.537,-3	.120,-2	-.113,-2	-.220,-2	.175,-3	-.852,-3
42	-.996,-3	-.145,-3	-.106,-2	.159,-2	.811,-3	.568,-3	-.603,-3	.232,-3	-.147,-3	-.121,-2
43	-.136,-2	.101,-3	-.729,-3	.160,-2	.968,-3	-.495,-3	.132,-2	.182,-2	.449,-3	.114,-3
44	-.183,-2	.372,-3	.247,-3	.563,-3	.119,-2	-.141,-2	.117,-2	.190,-2	-.601,-4	.127,-2
45	-.168,-2	-.762,-4	-.341,-3	-.100,-2	.105,-2	-.120,-2	.187,-3	.109,-2	-.110,-2	.149,-2
46	-.664,-3	-.531,-3	-.149,-2	-.101,-2	.901,-3	.552,-4	-.225,-6	.762,-4	-.463,-3	.380,-3
47	-.948,-3	-.698,-3	-.912,-3	-.167,-3	.685,-3	.721,-3	.304,-4	.586,-3	-.237,-3	-.310,-3
48	-.142,-2	-.407,-3	.422,-3	.180,-3	-.340,-3	.462,-3	-.118,-4	.102,-2	.142,-3	.158,-3
49	-.175,-2	-.572,-3	.545,-3	-.258,-3	-.124,-2	.436,-3	-.971,-4	.354,-3	.125,-2	-.327,-3
50	-.155,-2	-.401,-3	.319,-4	-.997,-4	-.156,-3	.243,-4	.330,-3	-.987,-4	.923,-3	-.133,-2
51	-.172,-2	.188,-3	-.737,-3	.413,-3	.802,-3	-.809,-3	.105,-2	-.630,-3	-.270,-3	-.676,-3
52	-.131,-2	.350,-3	-.711,-3	.101,-2	.980,-4	-.578,-3	.297,-3	-.167,-2	.572,-4	.222,-3
53	-.119,-2	.102,-3	-.209,-3	.126,-2	.719,-4	-.556,-3	-.648,-4	-.862,-3	.148,-2	.455,-3
54	-.212,-2	-.689,-4	-.413,-3	.879,-3	.329,-3	-.955,-3	.365,-3	-.213,-3	.133,-2	.242,-3
55	-.188,-2	-.429,-3	-.262,-3	.416,-3	.160,-3	-.417,-3	.311,-3	-.545,-3	.585,-3	-.228,-3
56	-.126,-2	-.575,-3	.464,-3	.700,-4	.588,-3	.123,-3	-.435,-3	-.407,-3	.132,-3	.304,-4
57	-.124,-2	-.440,-3	.561,-3	-.310,-3	.926,-3	-.488,-4	.160,-3	-.105,-3	-.564,-3	.761,-3
58	-.144,-2	.174,-3	.279,-3	-.913,-4	.922,-4	-.153,-3	.145,-2	.584,-3	-.567,-3	.695,-3
59	-.192,-2	.649,-3	-.467,-3	-.102,-3	-.301,-3	.631,-3	.216,-2	.713,-3	-.848,-3	.642,-3
60	-.184,-2	.843,-3	-.516,-3	-.121,-3	-.185,-3	.104,-2	.205,-2	.445,-3	-.878,-3	.832,-3

Run No. 6 ; v component

	Separation Distance (m.)									
N	6	12	18	24	30	42	48	72	84	90
00	.275	.225	.239	.230	.262	.277	.336	.285	.315	.339
01	.215	.170	.180	.174	.203	.213	.251	.203	.220	.241
02	.886,-1	.675,-1	.712,-1	.712,-1	.813,-1	.850,-1	.909,-1	.692,-1	.614,-1	.722,-1
03	.346,-1	.231,-1	.273,-1	.291,-1	.266,-1	.326,-1	.182,-1	.156,-1	-.808,-3	.323,-2
04	.250,-1	.140,-1	.172,-1	.163,-1	.102,-1	.141,-1	.245,-2	-.151,-2	-.113,-1	-.116,-1
05	.224,-1	.103,-1	.120,-1	.123,-1	.219,-2	.442,-2	-.113,-1	-.137,-1	-.149,-1	-.167,-1
06	.216,-1	.877,-2	.104,-1	.146,-1	.161,-2	.347,-2	-.172,-1	-.167,-1	-.122,-1	-.119,-1
07	.140,-1	.345,-2	.547,-2	.841,-2	-.962,-4	.224,-2	-.869,-2	-.915,-2	-.597,-2	-.493,-2
08	.889,-2	-.327,-3	.187,-2	.506,-2	-.313,-2	.828,-3	-.545,-2	-.327,-2	.563,-3	.136,-2
09	.692,-2	-.136,-2	.323,-3	.391,-2	-.436,-2	-.177,-2	-.571,-2	-.129,-2	.613,-2	.511,-2
10	.485,-2	-.815,-3	-.137,-3	.244,-2	-.253,-2	-.234,-2	-.349,-2	.162,-2	.600,-2	.460,-2
11	.527,-2	-.141,-2	.697,-3	.370,-2	-.368,-2	-.469,-2	-.307,-2	.294,-2	.571,-2	.537,-2
12	.840,-2	-.471,-2	.409,-4	.591,-2	-.635,-2	-.695,-2	-.426,-2	-.250,-3	.438,-2	.537,-2
13	.861,-2	-.594,-2	-.172,-2	.551,-2	-.570,-2	-.468,-2	.250,-3	-.765,-3	.732,-3	-.205,-3
14	.727,-2	-.531,-2	-.317,-2	.348,-2	-.402,-2	-.267,-2	.316,-2	.819,-3	-.520,-3	-.188,-2
15	.513,-2	-.434,-2	-.285,-2	.306,-2	-.431,-2	-.258,-2	.167,-2	.103,-2	.609,-3	.564,-3
16	.235,-2	-.464,-2	-.231,-2	.282,-2	-.279,-2	-.245,-2	.628,-3	.116,-2	-.251,-4	.167,-2
17	.416,-2	-.514,-2	-.337,-2	.232,-2	-.175,-2	-.334,-2	-.176,-4	.131,-2	-.625,-3	-.698,-4
18	.602,-2	-.370,-2	-.395,-2	.210,-2	-.231,-2	-.256,-2	.822,-3	.178,-3	-.919,-3	-.390,-2
19	.575,-2	-.304,-2	-.405,-2	.138,-2	-.799,-3	-.107,-2	.102,-2	.649,-4	.509,-3	-.188,-2
20	.553,-2	-.311,-2	-.424,-2	.388,-3	.169,-2	-.700,-3	-.145,-3	-.112,-2	.200,-2	.127,-2
21	.423,-2	-.136,-2	-.322,-2	.199,-4	.187,-2	-.701,-4	-.127,-2	-.354,-2	.178,-2	.160,-2
22	.384,-2	-.363,-3	-.275,-2	-.652,-4	.459,-3	-.317,-3	-.186,-2	-.170,-2	.139,-2	-.173,-3
23	.337,-2	-.336,-3	-.138,-2	-.816,-4	.114,-3	.582,-5	-.259,-2	-.415,-3	.184,-2	.385,-3
24	.312,-2	.104,-3	-.151,-2	-.164,-3	.114,-2	.230,-3	-.788,-3	.841,-3	.225,-2	.206,-3
25	.222,-2	.341,-3	-.271,-2	-.247,-3	.187,-2	.227,-3	-.144,-3	.193,-2	.176,-2	-.788,-3
26	.117,-2	.874,-3	-.147,-2	.107,-3	.139,-2	.195,-3	-.127,-2	.555,-3	-.544,-3	-.102,-2
27	.127,-2	.182,-2	-.194,-3	.114,-2	.521,-3	.498,-3	-.193,-3	-.797,-3	-.118,-2	-.458,-3
28	.142,-2	.258,-2	.102,-2	.211,-3	-.142,-2	.169,-3	.787,-3	-.374,-3	.492,-3	-.394,-3
29	.174,-2	.432,-2	.104,-2	-.174,-2	-.244,-2	-.465,-3	-.194,-3	.442,-3	.101,-2	-.296,-3
30	.168,-2	.388,-2	.654,-3	-.188,-2	-.132,-2	-.763,-3	.431,-4	.449,-3	-.229,-3	-.797,-3
31	.183,-2	.229,-2	.142,-3	-.975,-3	-.210,-3	-.500,-3	.988,-3	-.782,-3	-.117,-2	-.764,-3
32	.145,-2	.838,-3	-.273,-4	-.500,-3	-.101,-3	-.131,-3	.311,-3	-.178,-2	-.883,-3	-.421,-3
33	.114,-2	.140,-2	.765,-3	-.806,-3	-.716,-3	-.349,-3	-.462,-3	-.412,-3	-.905,-3	.343,-3
34	.100,-2	.149,-2	.118,-2	-.104,-2	-.965,-4	-.595,-3	-.212,-2	.116,-2	-.782,-3	.102,-2
35	.164,-2	.127,-2	.152,-2	-.123,-2	-.289,-4	-.717,-3	-.190,-2	.164,-2	-.117,-2	.221,-3
36	.223,-2	.106,-2	.115,-2	.286,-4	-.105,-2	-.893,-3	-.217,-3	.538,-4	-.137,-2	-.412,-3
37	.879,-3	-.506,-4	.676,-3	.629,-3	-.106,-2	-.559,-3	-.781,-3	-.896,-3	.699,-3	.499,-3
38	-.108,-2	-.174,-2	.151,-2	.561,-3	-.957,-3	.341,-4	-.199,-2	-.588,-3	.166,-2	.202,-2
39	-.135,-2	-.226,-2	.140,-2	.595,-3	-.693,-3	.426,-3	-.146,-2	-.816,-3	.479,-3	.124,-2
40	-.981,-3	-.124,-2	.160,-2	.516,-3	-.111,-2	.591,-3	-.170,-2	-.330,-3	.698,-3	-.625,-4
41	-.283,-3	-.104,-2	.174,-2	.649,-3	-.991,-3	-.581,-3	-.891,-3	.711,-3	-.341,-3	-.300,-3
42	.294,-3	-.143,-2	.158,-2	.175,-3	-.361,-3	-.136,-2	-.148,-3	.968,-3	-.196,-2	.530,-3
43	.694,-3	-.814,-3	.177,-3	-.362,-3	.294,-3	-.567,-3	.287,-3	-.392,-4	-.137,-2	.530,-3
44	.919,-3	-.665,-3	.254,-3	-.263,-3	.479,-3	-.366,-3	-.890,-3	-.660,-3	.988,-3	.197,-4
45	-.177,-2	-.159,-2	.162,-2	.331,-4	.739,-3	-.643,-3	-.228,-2	-.794,-3	.167,-2	.269,-4
46	-.233,-2	-.204,-2	.249,-2	-.242,-4	.831,-3	-.315,-3	-.148,-2	-.366,-3	.949,-3	-.179,-3
47	-.123,-2	-.183,-2	.126,-2	-.469,-4	.134,-3	-.641,-3	-.141,-2	.190,-3	.815,-3	-.102,-2
48	-.979,-3	-.142,-2	.166,-3	.740,-3	-.217,-3	.401,-3	-.174,-2	.751,-4	.533,-3	-.143,-2
49	-.180,-3	-.127,-2	-.776,-3	.977,-3	-.291,-3	.110,-2	-.567,-3	.641,-3	.195,-3	-.798,-3
50	-.437,-3	-.732,-3	-.152,-2	.230,-3	.515,-3	.788,-3	.730,-3	.974,-3	.590,-3	-.305,-3
51	-.121,-2	-.487,-3	-.715,-3	-.306,-3	.909,-3	.471,-3	.655,-3	.971,-4	.506,-3	-.217,-3
52	-.184,-2	.262,-3	.390,-3	-.432,-3	.896,-3	.562,-4	.545,-3	-.394,-3	.180,-3	-.655,-3
53	-.197,-2	.482,-3	-.276,-3	-.216,-3	.533,-4	.271,-3	.681,-4	.546,-3	.808,-5	-.582,-3
54	-.173,-2	.773,-3	-.498,-4	-.156,-3	.690,-3	.791,-3	-.596,-3	.717,-3	.205,-3	-.106,-2
55	-.918,-3	.768,-3	.953,-3	-.587,-3	.660,-3	.459,-3	-.114,-3	-.752,-4	-.116,-2	-.118,-2
56	-.123,-2	.510,-4	.963,-3	-.534,-3	.264,-3	-.176,-3	.199,-2	-.489,-3	-.134,-2	-.391,-3
57	-.248,-2	.964,-3	.507,-3	-.841,-4	-.436,-3	.413,-4	.188,-2	-.520,-3	-.756,-4	-.223,-3
58	-.235,-2	.266,-2	-.215,-3	.203,-3	-.175,-3	.790,-3	-.172,-3	-.106,-3	.757,-3	-.170,-2
59	-.295,-3	.195,-2	-.265,-3	.233,-3	.306,-3	.197,-3	-.454,-3	-.141,-3	.132,-2	-.113,-2
60	.860,-3	.895,-3	.545,-4	.294,-3	.121,-2	-.513,-3	.399,-3	-.398,-4	.114,-2	-.660,-4

Run No. 7 ; u component

	Separation Distance (m.)									
N	6	12	18	24	36	42	48	72	84	90
00	.355	.344	.346	.321	.304	.309	.278	.260	.249	.246
01	.290	.274	.273	.244	.233	.229	.218	.181	.173	.169
02	.119	.108	.106	.831,-1	.752,-1	.738,-1	.798,-1	.411,-1	.356,-1	.355,-1
03	.309,-1	.293,-1	.283,-1	.191,-1	.147,-1	.160,-1	.131,-1	-.187,-2	-.480,-2	-.437,-2
04	.125,-1	.147,-1	.111,-1	.120,-1	.593,-2	.746,-2	.313,-2	-.159,-2	-.118,-2	-.173,-2
05	.112,-1	.648,-2	.380,-2	.521,-2	.291,-2	.676,-3	-.823,-3	-.184,-2	-.331,-2	-.394,-2
06	.124,-1	.457,-2	.314,-2	-.458,-3	-.115,-2	-.312,-2	-.327,-2	-.381,-3	-.323,-2	-.343,-2
07	.980,-2	.471,-2	.186,-2	-.431,-2	-.151,-2	-.256,-2	-.527,-2	-.623,-4	-.170,-2	-.764,-3
08	.650,-2	.421,-2	-.225,-3	-.229,-2	.214,-2	-.202,-2	-.450,-2	-.393,-2	-.528,-2	-.516,-3
09	.407,-2	.405,-2	.134,-3	.579,-3	.214,-2	-.260,-2	-.337,-2	-.585,-2	-.585,-2	-.754,-3
10	.285,-2	.234,-2	.629,-3	-.791,-3	.788,-3	-.667,-3	.623,-3	-.317,-2	-.116,-2	-.611,-3
11	.239,-2	.114,-2	.639,-3	-.678,-3	.363,-3	.654,-3	.659,-4	.229,-3	.744,-4	-.887,-3
12	.183,-2	-.520,-3	-.904,-3	-.569,-3	-.770,-3	-.628,-3	-.110,-2	.482,-3	.525,-4	-.704,-3
13	.196,-2	.320,-3	-.181,-2	.298,-3	-.297,-3	-.118,-2	.304,-3	.222,-4	-.104,-3	-.171,-3
14	.999,-3	.115,-2	-.176,-2	.777,-3	-.101,-2	-.171,-2	.374,-3	.589,-4	-.319,-3	.118,-3
15	.283,-3	.614,-3	-.113,-2	.111,-3	-.107,-2	-.102,-2	.251,-3	.157,-3	-.442,-3	.180,-3
16	-.110,-3	.130,-3	-.503,-3	.108,-3	-.409,-3	-.952,-3	.433,-3	.806,-4	.293,-4	.179,-3
17	.185,-3	.314,-3	-.111,-3	-.333,-3	-.303,-3	-.328,-3	-.177,-3	-.402,-3	-.253,-3	-.431,-3
18	.298,-3	.259,-3	-.268,-4	-.509,-3	-.648,-4	.370,-3	-.262,-3	-.436,-3	.232,-3	-.570,-3
19	.475,-3	-.111,-3	.467,-3	-.398,-3	.147,-3	.345,-3	-.350,-3	.187,-3	.702,-3	.190,-4
20	.628,-3	-.354,-3	.314,-3	-.273,-3	-.196,-3	-.134,-3	-.550,-3	.667,-3	.293,-4	.307,-3
21	.118,-3	-.530,-3	-.231,-4	-.272,-4	-.555,-3	-.146,-3	-.870,-3	.102,-2	-.311,-3	.703,-3
22	-.158,-3	-.234,-3	-.568,-5	-.244,-3	-.105,-3	-.313,-3	-.527,-3	.827,-3	-.234,-3	.416,-3
23	.161,-3	.500,-3	.206,-3	-.143,-3	.451,-3	-.151,-3	-.294,-3	.276,-3	-.416,-3	-.368,-3
24	.689,-4	.222,-3	.592,-4	.337,-3	.168,-3	.391,-4	-.833,-4	-.105,-3	-.628,-3	-.109,-3
25	.860,-4	-.147,-3	.695,-4	.498,-3	.366,-4	.232,-3	.246,-3	-.208,-3	-.374,-3	.276,-3
26	.368,-3	-.474,-3	-.498,-3	.395,-3	.265,-3	-.268,-3	.393,-3	-.194,-3	-.121,-3	.227,-3
27	.537,-3	-.134,-3	-.455,-3	.271,-3	.602,-4	.138,-4	.315,-3	-.171,-3	.256,-3	.157,-3
28	.309,-3	-.138,-3	.319,-4	.421,-3	-.424,-3	.561,-3	.301,-3	-.112,-4	.408,-3	.439,-3
29	-.192,-4	-.258,-3	-.860,-4	.367,-3	-.293,-3	-.455,-4	-.365,-4	.376,-4	-.863,-4	.439,-3
30	.190,-3	-.656,-4	-.226,-3	.983,-4	-.109,-3	-.172,-3	-.326,-4	.160,-3	-.212,-3	.497,-3
31	.287,-3	.313,-3	-.730,-4	-.259,-3	.531,-4	.102,-3	.101,-3	.206,-3	.170,-3	.272,-3
32	.173,-3	.401,-3	.124,-3	-.690,-3	.225,-3	-.316,-3	.136,-4	-.274,-3	.144,-3	-.722,-4
33	.461,-4	.349,-3	.321,-3	-.544,-3	.839,-4	-.362,-3	.435,-4	-.227,-3	-.532,-4	-.157,-4
34	-.146,-3	.109,-3	.277,-3	-.850,-4	-.369,-3	-.106,-3	.148,-3	-.770,-4	-.168,-3	.104,-3
35	-.342,-5	.238,-4	-.549,-4	.798,-5	-.390,-3	-.503,-4	.168,-3	-.771,-4	-.920,-4	.237,-3
36	-.342,-4	-.659,-4	.665,-4	-.199,-3	-.486,-3	.244,-3	.443,-3	-.305,-4	-.114,-3	.270,-3
37	.595,-4	-.406,-4	.313,-3	-.797,-4	-.459,-3	.277,-3	.200,-3	-.175,-3	-.634,-4	.218,-3
38	.244,-3	.923,-4	.337,-3	-.107,-3	-.396,-3	-.694,-4	-.994,-5	-.177,-3	-.321,-4	-.119,-3
39	.554,-4	-.114,-3	.894,-4	-.121,-3	-.279,-3	.514,-4	.149,-3	.226,-5	-.277,-4	-.143,-3
40	-.730,-4	-.856,-4	-.103,-3	-.168,-3	-.110,-3	.113,-3	.617,-4	-.106,-3	-.217,-4	.509,-4
41	-.0 9,-5	-.276,-4	.154,-5	-.131,-3	.338,-4	.105,-3	.574,-6	-.148,-3	-.645,-4	.267,-5
42	.205,-3	-.217,-4	.171,-3	-.147,-3	-.155,-4	.178,-4	.955,-4	-.130,-4	-.922,-4	.246,-3
43	.353,-3	.320,-3	.221,-3	-.864,-4	-.450,-4	-.463,-4	.108,-3	.130,-3	-.933,-4	.530,-4
44	.174,-3	.281,-3	.908,-4	-.169,-5	.826,-4	-.216,-4	-.266,-3	-.139,-3	-.228,-3	-.191,-4
45	.108,-3	.121,-3	.534,-4	.556,-4	.374,-5	-.941,-4	-.361,-3	-.412,-3	-.220,-3	-.707,-4
46	.115,-3	.181,-3	-.210,-4	.112,-3	-.129,-3	-.356,-3	-.149,-3	-.298,-3	.325,-4	.702,-4
47	.609,-4	.208,-3	-.791,-4	.301,-4	-.352,-4	-.399,-3	.515,-4	-.602,-4	-.164,-4	.340,-4
48	.154,-3	.400,-4	.759,-4	-.777,-4	.123,-3	-.302,-3	.902,-4	-.216,-4	-.181,-3	-.183,-3
49	.179,-3	.112,-3	.216,-3	-.147,-4	.244,-3	-.576,-4	.180,-4	-.171,-3	-.125,-3	-.163,-3
50	-.587,-4	.802,-4	.842,-4	-.716,-5	.107,-3	-.666,-6	.914,-4	-.860,-4	.272,-4	-.365,-4
51	-.164,-5	.334,-5	.634,-4	.133,-3	-.179,-3	-.914,-5	.271,-3	.508,-4	-.301,-4	.521,-4
52	.183,-3	-.213,-4	.678,-4	.121,-3	-.211,-3	-.136,-3	.319,-3	.132,-3	-.341,-4	.714,-4
53	.186,-4	-.993,-5	-.271,-4	.228,-3	-.172,-4	-.600,-4	.229,-4	.778,-4	-.406,-4	-.127,-3
54	-.617,-4	-.728,-4	-.675,-4	.195,-3	.986,-4	-.525,-4	-.258,-3	-.116,-3	-.597,-4	-.987,-4
55	.385,-4	-.121,-3	-.461,-4	-.824,-4	.978,-4	-.170,-3	-.241,-3	-.134,-3	.869,-4	.664,-6
56	.529,-4	-.745,-4	.565,-4	-.903,-4	.732,-4	-.152,-3	-.564,-4	-.255,-4	.113,-3	-.480,-4
57	-.684,-4	-.435,-4	.116,-3	.548,-4	.830,-4	.456,-6	-.364,-4	-.141,-4	-.956,-4	.123,-3
58	-.121,-3	-.5[illegible],-4	.677,-4	-.148,-3	.142,-3	.266,-3	-.101,-3	-.138,-3	-.348,-5	.156,-3
59	.819,-4	-.123,-3	.102,-3	-.210,-3	.236,-3	.250,-3	-.148,-3	-.151,-3	.174,-3	.462,-4
60	.169,-3	-.118,-3	.108,-3	-.555,-4	.209,-3	.722,-4	-.556,-4	-.200,-4	.213,-3	.650,-4

Run No. 7 ; v component

Separation Distance (m.)

N	6	12	18	24	36	42	48	72	84	90
00	.398	.395	.389	.391	.373	.364	.355	.321	.294	.283
01	.252	.249	.244	.246	.230	.223	.221	.197	.174	.166
02	.716,-1	.682,-1	.662,-1	.616,-1	.530,-1	.510,-1	.548,-1	.341,-1	.235,-1	.213,-1
03	.264,-1	.241,-1	.222,-1	.193,-1	.130,-1	.132,-1	.765,-2	-.617,-2	-.762,-2	-.480,-2
04	.167,-1	.161,-1	.130,-1	.138,-1	.604,-2	.561,-2	-.567,-2	-.988,-2	-.303,-2	.242,-2
05	.130,-1	.114,-1	.750,-2	.486,-2	.237,-3	-.957,-3	-.998,-2	-.347,-2	.364,-2	.776,-2
06	.105,-1	.776,-2	.410,-2	.677,-3	-.279,-2	-.376,-2	-.458,-2	.268,-2	.419,-2	.505,-2
07	.883,-2	.680,-2	.322,-2	-.121,-2	-.292,-2	-.356,-2	-.318,-2	.358,-2	.207,-2	.106,-2
08	.669,-2	.342,-2	.187,-2	-.202,-2	-.192,-2	-.112,-2	-.996,-3	.139,-2	-.944,-3	-.188,-2
09	.627,-2	.155,-2	.880,-3	-.128,-3	-.883,-3	.190,-3	.911,-3	-.107,-2	-.152,-2	-.113,-2
10	.550,-2	.268,-3	-.668,-3	-.487,-3	-.653,-3	.619,-3	.134,-2	-.237,-2	-.799,-3	.448,-3
11	.514,-2	-.340,-3	-.171,-2	-.156,-2	.409,-3	.180,-2	.153,-2	-.198,-2	.111,-2	.227,-2
12	.464,-2	-.373,-3	-.226,-2	-.244,-2	.887,-3	.174,-2	.839,-3	-.750,-3	.290,-2	.257,-2
13	.258,-2	-.350,-3	-.152,-2	-.204,-2	.946,-3	.920,-3	.206,-3	.105,-2	.166,-2	-.155,-3
14	.128,-2	-.137,-2	-.146,-2	-.137,-2	.104,-2	.491,-3	-.690,-3	.164,-2	-.519,-3	-.138,-2
15	.133,-2	-.993,-3	-.124,-2	-.101,-2	.137,-2	.475,-3	-.109,-2	.114,-2	-.375,-3	-.646,-3
16	.181,-2	-.132,-2	-.131,-2	-.791,-3	.132,-2	.679,-3	-.638,-3	.245,-3	.163,-4	-.405,-3
17	.172,-2	-.826,-3	-.936,-3	-.495,-3	.492,-3	.817,-3	-.640,-3	.931,-4	-.502,-4	.388,-4
18	.903,-3	-.446,-3	-.784,-3	-.790,-4	-.171,-3	.641,-3	-.247,-3	.112,-3	.155,-3	.234,-3
19	.631,-3	-.562,-3	-.537,-3	.554,-3	-.433,-3	-.238,-3	.364,-3	.282,-3	.474,-3	-.633,-4
20	.608,-3	-.491,-3	-.634,-3	.348,-3	-.376,-3	-.425,-3	.479,-3	.471,-4	-.759,-4	-.429,-3
21	.757,-3	-.548,-3	-.389,-3	.769,-4	-.161,-3	-.146,-3	.401,-3	-.119,-3	-.544,-3	-.287,-3
22	.292,-3	-.442,-3	-.134,-3	.204,-3	-.179,-4	.100,-4	.565,-3	.211,-3	-.547,-3	-.198,-3
23	.114,-3	-.228,-3	.143,-4	.336,-3	.221,-3	.465,-5	.392,-3	.217,-3	.126,-5	-.127,-3
24	-.190,-4	-.308,-3	.114,-3	.548,-4	.229,-3	-.263,-4	.679,-4	-.223,-3	.149,-3	.117,-4
25	.789,-4	-.115,-3	-.121,-4	-.173,-3	.114,-3	.123,-3	-.773,-4	.540,-5	.160,-3	.206,-3
26	.856,-4	-.454,-4	-.233,-3	-.372,-3	-.775,-4	.191,-3	-.323,-3	.853,-4	-.238,-3	.132,-3
27	-.901,-5	-.180,-3	-.176,-3	-.425,-3	.172,-3	.100,-3	-.175,-3	.426,-4	-.126,-3	.259,-3
28	-.129,-3	-.386,-3	-.275,-3	-.199,-3	.805,-4	.156,-3	.157,-3	.266,-3	-.734,-4	.175,-3
29	-.233,-4	-.199,-3	-.546,-3	.435,-4	-.162,-3	.264,-3	-.605,-4	.522,-3	.612,-4	-.510,-3
30	-.125,-3	-.737,-4	-.365,-3	.347,-4	-.198,-3	.262,-3	-.168,-3	.218,-3	.254,-3	-.114,-3
31	-.143,-3	.709,-4	-.854,-4	.179,-3	-.883,-4	.200,-3	.156,-3	.332,-3	.267,-3	-.693,-4
32	-.132,-3	.182,-3	-.164,-3	.159,-3	.207,-4	.253,-3	.185,-3	.361,-4	.108,-3	.248,-3
33	.175,-3	.645,-4	-.223,-3	.134,-3	.900,-4	.320,-3	.875,-4	-.174,-3	.505,-4	.476,-3
34	.193,-3	.131,-3	-.133,-5	.573,-4	.114,-3	.307,-3	.524,-4	.121,-4	.105,-3	.187,-3
35	.106,-3	.259,-3	.930,-4	.144,-3	.167,-3	.264,-3	-.367,-4	.228,-3	.172,-4	-.105,-3
36	.375,-4	-.656,-4	.154,-3	.337,-3	.533,-4	.121,-3	-.147,-4	.167,-3	-.250,-4	-.106,-3
37	.272,-3	-.411,-4	.157,-3	.371,-3	-.205,-4	.954,-4	-.106,-3	.116,-3	.169,-3	.277,-3
38	.235,-3	.964,-4	.141,-3	.148,-3	-.280,-5	.578,-4	-.158,-3	.347,-5	.172,-3	.194,-3
39	.110,-3	.103,-3	.215,-3	.184,-4	.571,-4	.109,-4	.109,-4	-.247,-4	-.227,-4	.634,-4
40	.864,-4	.122,-3	.131,-3	.184,-4	.724,-4	-.387,-4	-.590,-4	.820,-4	-.133,-3	.835,-4
41	.108,-4	.247,-3	.352,-4	.135,-3	.152,-3	-.865,-4	.250,-4	.105,-3	-.562,-4	.559,-4
42	-.153,-3	.833,-4	-.100,-3	-.207,-4	.125,-3	-.115,-3	.572,-4	.175,-4	.190,-3	.138,-3
43	-.179,-3	-.174,-4	-.934,-4	-.160,-3	.341,-4	-.564,-4	-.130,-3	-.119,-3	.327,-3	.127,-3
44	-.123,-3	.315,-4	.441,-4	-.197,-3	-.161,-4	-.366,-4	-.233,-3	-.841,-4	.276,-3	-.540,-4
45	.795,-4	.183,-3	-.536,-4	-.933,-4	-.648,-4	-.124,-3	-.171,-3	.338,-4	.347,-3	.838,-4
46	.220,-3	-.868,-4	-.768,-5	-.175,-5	-.704,-4	-.205,-3	-.249,-4	.267,-4	.182,-3	.221,-3
47	.246,-4	-.189,-3	.128,-3	-.219,-4	.653,-4	-.166,-3	.848,-4	.239,-3	-.781,-4	.244,-3
48	-.171,-3	-.650,-4	.258,-4	-.388,-4	-.280,-4	-.755,-4	.568,-4	.353,-3	-.191,-3	-.194,-4
49	-.133,-3	.567,-4	-.159,-3	-.100,-3	-.249,-4	-.934,-4	-.159,-4	.115,-3	-.193,-3	-.247,-3
50	-.256,-3	-.612,-4	.192,-4	-.151,-3	-.133,-3	-.295,-4	-.723,-4	-.244,-3	.260,-4	-.261,-3
51	-.204,-3	-.433,-4	.115,-3	-.422,-4	.393,-4	.676,-4	-.291,-4	-.292,-3	-.296,-4	.115,-4
52	-.213,-3	.999,-4	.590,-4	.197,-4	.186,-3	-.633,-4	.119,-3	-.355,-3	-.872,-4	.468,-4
53	-.139,-3	.238,-3	.829,-6	-.510,-4	.213,-3	-.115,-3	.180,-3	-.257,-3	.228,-4	-.217,-3
54	-.215,-3	.178,-3	-.110,-3	-.314,-4	.141,-3	-.254,-4	.337,-4	-.147,-3	-.789,-5	-.202,-3
55	-.187,-3	.667,-4	-.128,-3	.400,-4	.150,-4	.563,-4	-.980,-4	-.132,-3	-.126,-3	-.568,-4
56	-.272,-3	.120,-3	-.229,-3	-.568,-4	-.810,-4	.126,-3	-.194,-3	-.182,-4	-.164,-3	-.144,-3
57	-.188,-3	-.305,-4	-.112,-4	-.114,-3	.416,-4	.731,-4	-.166,-3	.242,-3	.738,-4	.609,-4
58	.179,-3	-.169,-3	-.933,-5	-.589,-4	.826,-4	-.133,-3	-.147,-4	.224,-3	.147,-3	.135,-3
59	.334,-3	-.697,-4	-.147,-4	.596,-4	.395,-4	-.159,-3	.179,-4	-.283,-4	.432,-4	.496,-4
60	.245,-3	.178,-4	.305,-4	.611,-4	.324,-4	-.115,-3	-.193,-4	-.116,-3	-.128,-3	.132,-4

Run No. 7 ; w component

Separation Distance (m.)

N	6	12	18	24	36		48	72	84	90
00	.129,-1	.366,-2	.154,-1	.124,-2	.450,-2	.142,-2	-2	.201,-2	.878,-2	.200,-2
01	.147,-1	.562,-2	.155,-1	.216,-2	.217,-2	.537,-2	-.39-	.453,-2	.504,-2	.207,-2
02	.121,-1	.623,-2	.116,-1	.622,-2	-.259,-2	.945,-2	-.762,-2	521,-2	-.216,-2	-.872,-3
03	.117,-1	.579,-2	.917,-2	.104,-1	-.430,-3	.418,-2	.176,-2	-.867,-3	-.373,-2	-.574,-2
04	.825,-2	-.172,-2	.522,-2	.747,-2	.245,-2	- 125,-2	.408,-2	-.106,-2	.176,-2	-.942,-2
05	.101,-1	-.142,-2	.155,-2	.140,-2	-.433,-2	-.586,-2	-.149,-2	-.583,-4	-.515,-2	-.739,-2
06	.136,-1	.416,-2	.451,-2	-.367,-2	-.638,-2	-.695,-2	-.183,-2	-.221,-2	-.878,-2	-.159,-2
07	.901,-2	.159,-2	.104,-2	-.597,-2	-.577,-2	-.441,-2	-.300,-2	-.118,-2	-.317,-2	-.718,-3
08	.357,-2	-.208,-2	-.323,-2	-.304,-2	-.717,-2	-.359,-2	-.132,-2	-.956,-4	-.403,-2	-.429,-2
09	.493,-2	.241,-3	.110,-2	-.100,-2	-.797,-2	-.694,-2	-.124,-3	-.249,-2	-.333,-2	-.324,-2
10	.909,-2	.526,-2	-.480,-3	-.334,-2	-.540,-2	-.442,-2	.398,-2	-.153,-2	-.160,-2	.119,-3
11	.948,-2	.532,-2	-.470,-2	-.443,-2	.154,-2	.400,-2	.234,-2	-.105,-2	-.579,-2	-.137,-2
12	.828,-2	.156,-2	-.157,-2	-.117,-2	.276,-3	.280,-2	.211,-2	-.270,-2	-.800,-2	-.201,-2
13	.588,-2	-.267,-3	.219,-2	-.812,-3	-.535,-3	.266,-2	.385,-2	-.161,-2	-.641,-2	.747,-3
14	.161,-2	-.639,-3	.335,-3	-.405,-2	.679,-4	.124,-2	.192,-2	-.226,-2	-.306,-2	.173,-2
15	.747,-3	-.125,-2	-.117,-2	-.271,-2	-.706,-3	-.339,-3	.140,-2	-.177,-2	.149,-2	-.598,-3
16	.103,-2	-.224,-2	-.107,-2	-.179,-2	.191,-2	-.164,-2	.118,-2	.171,-2	.603,-4	-.394,-2
17	.317,-2	.845,-4	-.982,-3	-.149,-2	.114,-2	-.403,-3	.159,-2	-.342,-2	-.286,-2	-.138,-3
18	-.290,-2	.159,-2	-.179,-3	-.557,-3	-.206,-2	.129,-2	.517,-2	-.563,-2	.134,-2	.369,-2
19	-.490,-2	-.145,-2	-.847,-3	.266,-2	-.792,-4	.156,-2	.493,-2	.121,-2	.464,-2	.557,-3
20	-.258,-2	-.165,-2	-.252,-2	.280,-2	.154,-2	.526,-3	.143,-2	.441,-2	.294,-2	-.136,-2
21	-.277,-2	.774,-4	-.114,-2	.853,-3	-.759,-3	.710,-3	-.132,-2	.561,-2	.392,-3	-.990,-3
22	-.315,-3	.143,-2	.995,-3	-.112,-2	-.916,-3	.510,-3	-.424,-2	.613,-2	-.496,-3	.227,-3
23	.157,-2	.210,-2	.427,-4	-.395,-3	.790,-3	.140,-2	-.404,-2	.315,-2	.115,-2	.166,-2
24	.249,-2	-.156,-2	-.295,-2	.840,-3	.214,-2	.293,-2	-.272,-2	.143,-2	-.116,-2	.593,-3
25	.258,-2	-.355,-2	-.319,-2	-.118,-2	.286,-2	.905,-3	-.388,-2	.149,-2	-.402,-2	-.158,-2
26	.316,-3	-.495,-2	-.236,-2	-.211,-2	.471,-2	-.260,-2	-.278,-2	.698,-3	-.396,-2	-.106,-2
27	-.855,-3	-.151,-2	.214,-3	-.148,-3	.361,-2	-.194,-2	.164,-2	-.113,-2	-.723,-3	-.297,-3
28	-.653,-3	.205,-2	.393,-2	.527,-3	-.326,-3	.442,-3	.187,-2	-.043,-4	.233,-2	-.174,-2
29	-.187,-2	.612,-3	.304,-2	.121,-2	-.426,-2	.425,-4	-.119,-2	.152,-2	.254,-2	-.123,-2
30	-.190,-2	-.548,-3	.221,-2	-.556,-3	-.412,-2	-.229,-2	-.218,-2	.292,-2	-.131,-2	.204,-2
31	.180,-2	.448,-3	.365,-2	-.140,-2	.141,-2	-.208,-2	-.380,-3	.162,-2	-.960,-3	.474,-3
32	.379,-2	.229,-2	.183,-2	.114,-2	.256,-2	-.317,-3	-.178,-3	.105,-2	.234,-2	-.348,-2
33	.618,-3	-.269,-3	-.143,-2	.194,-2	.129,-2	-.194,-2	-.194,-2	.255,-2	.187,-2	-.197,-3
34	-.350,-2	-.150,-2	-.184,-2	.279,-3	.975,-3	-.321,-2	-.491,-2	.963,-3	-.384,-5	.264,-2
35	-.360,-2	-.482,-3	-.858,-3	.106,-3	.137,-3	-.188,-2	-.380,-2	-.844,-3	-.489,-3	.636,-3
36	-.187,-2	-.571,-4	.381,-3	-.153,-2	-.317,-4	.822,-4	-.145,-2	-.117,-2	-.933,-3	-.295,-2
37	-.741,-3	-.384,-3	.140,-2	.611,-4	.156,-2	.120,-2	-.196,-2	-.293,-2	-.156,-2	-.242,-2
38	-.240,-3	-.155,-2	.275,-2	.164,-2	.204,-2	-.284,-4	-.865,-3	-.125,-2	-.369,-3	.525,-3
39	.903,-3	-.227,-2	.240,-2	-.110,-2	.127,-3	-.251,-3	-.145,-3	.101,-2	.556,-3	.134,-2
40	.610,-3	-.359,-3	.141,-2	-.533,-3	.365,-3	.308,-2	.220,-2	.112,-2	-.969,-3	.970,-3
41	.784,-3	.126,-2	.209,-2	-.211,-3	.987,-3	.134,-2	.232,-2	.270,-2	.316,-3	.192,-2
42	.114,-2	.105,-2	.330,-2	.329,-3	.114,-2	-.742,-3	.717,-3	.177,-2	.140,-2	.252,-2
43	-.198,-2	.240,-2	.279,-2	.221,-2	.247,-2	.148,-2	-.377,-3	-.112,-2	.103,-2	.483,-3
44	-.385,-2	.462,-2	.197,-2	.185,-2	.300,-2	.867,-3	-.690,-3	-.173,-2	.214,-4	-.266,-2
45	-.396,-2	.125,-2	.231,-2	-.727,-3	.137,-2	-.312,-2	.877,-3	-.670,-3	-.136,-3	-.387,-2
46	-.238,-2	-.799,-3	.582,-3	-.769,-3	.510,-3	-.439,-2	.226,-2	.197,-3	.145,-2	-.361,-2
47	-.762,-3	-.154,-3	-.196,-2	-.582,-3	.457,-3	-.210,-3	.441,-2	-.401,-3	-.102,-2	-.902,-3
48	-.113,-2	.318,-3	-.316,-2	-.143,-2	-.619,-3	.360,-2	.479,-2	.801,-3	-.194,-2	-.255,-3
49	-.046,-3	.164,-2	-.130,-2	-.129,-2	.344,-3	.308,-2	.149,-2	.193,-2	-.921,-3	-.159,-2
50	.863,-3	.217,-4	.522,-4	-.300,-3	-.188,-3	.253,-2	-.414,-3	-.997,-3	-.516,-3	.315,-3
51	.160,-2	-.224,-2	-.180,-3	-.591,-3	-.209,-2	.371,-2	.111,-2	-.439,-2	.103,-2	.258,-2
52	.172,-2	-.221,-2	-.718,-3	-.426,-3	-.976,-3	.313,-2	.106,-2	-.494,-2	.199,-2	.163,-2
53	.150,-2	-.951,-5	-.310,-3	.321,-3	-.818,-3	.215,-2	-.500,-3	-.333,-2	.207,-2	-.258,-3
54	.174,-2	.108,-2	.353,-3	.243,-3	-.247,-2	.971,-3	-.715,-3	-.698,-3	.321,-3	-.147,-2
55	.681,-3	-.874,-3	.637,-3	-.127,-2	-.107,-2	-.361,-3	-.107,-2	.300,-2	-.262,-2	-.259,-2
56	.292,-3	-.268,-2	.577,-3	-.125,-2	.114,-2	.319,-3	-.200,-2	.306,-2	-.312,-2	-.132,-2
57	-.111,-2	-.215,-2	.401,-3	-.933,-3	.742,-3	.204,-2	-.173,-2	-.268,-3	-.164,-2	-.101,-2
58	-.340,-2	-.659,-3	-.108,-2	-.232,-2	.344,-3	.124,-2	-.369,-3	-.151,-2	.574,-3	-.105,-2
59	-.134,-2	-.133,-2	-.180,-2	-.856,-4	.536,-3	-.168,-2	-.691,-4	-.285,-2	.863,-3	.262,-3
60	.146,-4	-.128,-2	-.190,-2	.230,-2	.740,-3	-.324,-2	-.876,-3	-.352,-2	.354,-3	.432,-3

Run No. 8 ; u component

Separation Distance (m.)

N	6	12	18	24	30	42	48	72	84	90
00	.294	.275	.275	.261	.256	.263	.199	.203	.222	.208
01	.194	.190	.172	.191	.171	.160	.130	.143	.146	.121
02	.728,-1	.897,-1	.484,-1	.880,-1	.681,-1	.384,-1	.409,-1	.648,-1	.385,-1	.276,-1
03	.357,-1	.289,-1	.131,-1	.239,-1	.244,-1	.948,-2	.120,-1	.244,-1	.251,-2	.117,-1
04	.250,-1	.969,-2	.436,-2	.529,-2	.915,-2	.981,-2	.763,-2	.113,-1	-.387,-3	.313,-2
05	.100,-1	.741,-2	.167,-2	.444,-2	.569,-2	.927,-2	.336,-2	.542,-2	-.178,-2	-.345,-2
06	.629,-2	.648,-2	.373,-2	.386,-2	.287,-2	.623,-2	.190,-2	.164,-3	-.353,-3	-.406,-2
07	.334,-2	.374,-2	.352,-2	.250,-2	.117,-2	.299,-2	.244,-2	-.774,-3	-.331,-3	-.197,-2
08	.146,-2	.190,-3	-.927,-3	.212,-3	.129,-2	.193,-3	.129,-2	.513,-3	-.291,-2	.111,-2
09	.514,-3	-.151,-2	-.285,-3	-.145,-2	.198,-2	.539,-3	.816,-3	-.212,-2	.317,-3	.252,-2
10	-.610,-3	-.215,-2	.119,-2	-.138,-2	-.206,-3	-.819,-3	.117,-2	-.263,-2	.187,-2	.268,-3
11	-.603,-4	-.170,-2	.455,-3	-.328,-3	-.653,-3	-.176,-2	-.280,-3	-.568,-3	.215,-2	.376,-3
12	.680,-3	-.953,-3	.127,-2	.244,-3	.521,-3	.617,-3	.200,-4	-.466,-3	.100,-2	.117,-2
13	.129,-2	.311,-3	.456,-3	.108,-3	.554,-3	.208,-2	.117,-2	-.155,-3	-.821,-3	-.110,-3
14	.355,-3	.111,-2	-.543,-3	.795,-3	-.588,-4	.267,-2	.742,-3	.196,-3	-.114,-2	.178,-2
15	-.986,-4	.519,-3	.596,-3	.117,-2	.816,-4	.187,-2	.166,-2	.198,-2	-.197,-2	.258,-2
16	.465,-3	-.321,-3	.802,-3	-.490,-4	.199,-3	.546,-3	.144,-2	.104,-2	-.498,-3	.122,-2
17	.429,-3	.364,-3	.129,-2	-.268,-3	.337,-3	-.240,-3	.456,-3	-.481,-3	.690,-3	-.723,-4
18	.279,-3	.770,-3	.162,-2	-.740,-4	.497,-3	-.504,-3	.325,-3	-.155,-3	.481,-3	.662,-3
19	.719,-5	.912,-3	.956,-3	.326,-3	.145,-2	-.693,-3	.294,-3	.758,-3	.760,-3	.104,-2
20	-.602,-3	.578,-3	.312,-4	.138,-2	.152,-2	-.270,-3	.193,-3	.498,-3	.111,-2	.211,-3
21	-.635,-3	.503,-3	-.394,-3	.108,-2	.617,-3	.204,-3	-.123,-3	-.202,-3	.860,-3	.231,-3
22	-.102,-2	.602,-3	-.188,-3	.263,-3	-.193,-3	-.324,-3	-.139,-3	-.793,-3	-.205,-3	-.250,-4
23	-.136,-2	.207,-3	.145,-3	.318,-4	.218,-3	-.951,-5	-.379,-4	-.529,-3	-.354,-3	.885,-4
24	-.957,-3	-.116,-3	.356,-3	.259,-3	.494,-3	.584,-3	.133,-3	.258,-3	.152,-3	.135,-3
25	-.922,-3	-.773,-4	.232,-3	.717,-3	.491,-3	.283,-3	.200,-3	.261,-3	.896,-3	-.145,-3
26	-.995,-3	-.163,-3	-.259,-3	.223,-3	-.968,-4	-.851,-4	-.308,-3	-.865,-4	.979,-3	-.337,-3
27	-.327,-3	-.671,-4	.971,-4	-.151,-3	-.206,-3	-.363,-3	-.561,-3	-.211,-4	.362,-3	.329,-4
28	-.147,-3	.248,-4	.444,-3	.171,-3	-.163,-3	-.230,-3	.209,-3	.237,-3	.111,-4	.665,-3
29	-.153,-3	.197,-3	.326,-3	.539,-3	-.124,-3	.351,-3	.824,-3	.838,-5	.547,-4	.914,-3
30	-.349,-3	.320,-3	-.657,-4	.250,-3	-.398,-3	-.706,-4	-.429,-4	-.440,-3	-.357,-3	.288,-3
31	-.274,-3	.141,-3	-.181,-3	.851,-4	-.523,-3	-.625,-4	-.346,-3	.177,-4	-.625,-3	.340,-3
32	-.114,-3	.176,-3	-.691,-3	-.463,-3	-.623,-3	.372,-3	.249,-3	-.879,-4	-.763,-3	.373,-3
33	-.271,-3	-.153,-3	-.647,-3	-.178,-4	-.492,-3	.477,-3	.438,-3	-.482,-3	-.460,-3	-.474,-4
34	-.495,-3	-.614,-3	-.119,-3	.675,-3	-.363,-3	.257,-3	-.227,-3	-.189,-3	.278,-3	-.435,-3
35	-.150,-3	-.102,-4	.106,-3	.648,-3	-.419,-3	.924,-4	-.474,-3	-.164,-3	.306,-3	-.374,-3
36	-.287,-3	.364,-3	.622,-4	.547,-3	-.773,-3	-.134,-4	-.533,-3	-.128,-3	.488,-3	.700,-4
37	-.380,-3	.475,-3	.110,-5	-.133,-4	-.548,-3	.863,-4	-.196,-3	.193,-3	.557,-3	.214,-3
38	-.453,-3	.523,-3	-.480,-3	-.162,-3	-.195,-3	.167,-3	.665,-5	.619,-5	.923,-4	-.186,-5
39	-.271,-3	.273,-3	-.425,-3	.403,-3	.253,-3	.345,-3	-.450,-3	-.173,-3	-.405,-3	-.374,-3
40	.225,-3	-.285,-3	.860,-4	.228,-3	.402,-3	.402,-3	-.413,-3	-.344,-3	-.440,-3	-.810,-3
41	.273,-3	-.255,-3	.296,-3	-.159,-3	.864,-5	.196,-3	.283,-3	-.365,-3	-.269,-3	-.497,-3
42	.437,-4	-.126,-3	.180,-3	.192,-4	-.124,-3	-.256,-3	.646,-4	.130,-4	-.325,-3	.241,-3
43	.291,-3	-.131,-3	.560,-5	.246,-4	-.542,-4	-.306,-3	-.263,-3	-.122,-3	-.482,-5	.577,-3
44	.403,-3	-.281,-3	-.929,-4	.277,-3	-.663,-4	.119,-3	-.256,-3	-.481,-3	.267,-3	.165,-3
45	.228,-3	-.675,-4	-.453,-4	.327,-3	.173,-3	.633,-4	-.292,-3	-.623,-3	.211,-3	-.120,-3
46	.129,-3	.101,-4	.109,-3	-.139,-3	.318,-3	-.302,-3	-.112,-3	-.438,-3	.245,-3	-.779,-4
47	-.148,-3	-.127,-3	.465,-4	-.257,-3	.982,-4	-.316,-3	.125,-3	-.282,-3	.144,-3	-.862,-4
48	-.444,-3	.425,-4	-.241,-3	-.620,-4	.184,-3	-.204,-4	.211,-3	-.254,-3	-.129,-3	-.409,-3
49	-.919,-4	-.741,-4	-.325,-3	-.177,-4	-.254,-3	.563,-4	-.796,-4	-.234,-3	-.316,-5	-.382,-3
50	.215,-3	-.135,-3	-.184,-3	.240,-4	-.230,-3	.282,-4	-.126,-5	-.494,-4	-.120,-3	-.380,-3
51	.206,-3	-.169,-3	-.138,-3	.486,-4	-.136,-3	.107,-3	-.104,-5	.296,-3	-.166,-3	-.418,-3
52	.148,-3	-.166,-3	-.491,-4	.118,-3	-.442,-4	.184,-3	.153,-4	.269,-3	-.936,-4	-.297,-3
53	.825,-4	-.610,-4	.454,-3	.840,-4	.360,-4	.139,-3	.162,-3	.246,-5	.691,-4	-.215,-3
54	.137,-4	-.194,-3	.459,-3	.292,-4	.115,-3	-.988,-4	-.644,-4	-.286,-3	.188,-3	-.901,-4
55	.151,-3	-.137,-3	.351,-4	.629,-4	.866,-4	-.208,-3	-.258,-3	-.272,-3	.274,-3	-.527,-4
56	.660,-4	.372,-4	-.256,-4	-.390,-4	-.106,-3	-.244,-3	-.109,-3	-.147,-3	.132,-3	-.114,-3
57	-.105,-3	.211,-3	.102,-3	-.160,-3	-.144,-3	-.212,-3	-.252,-4	-.472,-4	-.105,-3	-.180,-4
58	-.192,-3	.128,-4	-.326,-4	.111,-3	-.246,-3	.598,-4	-.335,-3	.689,-5	-.194,-3	.783,-4
59	-.285,-3	-.205,-3	.149,-3	.429,-3	-.152,-3	.318,-3	-.419,-3	-.255,-3	.112,-3	-.620,-4
60	-.298,-3	-.260,-3	.274,-3	.485,-3	-.237,-4	.300,-3	-.262,-3	-.374,-3	.235,-3	-.130,-3

Run No. 8 ; v component

Separation Distance (m.)

N	6	12	18	24	36	42	48	72	84	90
00	.404	.402	.407	.409	.369	.402	.367	.340	.332	.342
01	.235	.238	.236	.235	.206	.212	.200	.183	.181	.186
02	.570,-1	.562,-1	.493,-1	.386,-1	.252,-1	.241,-1	.256,-1	.191,-1	.267,-1	.247,-1
03	.208,-1	.155,-1	.108,-1	-.201,-3	-.255,-2	-.400,-2	-.248,-2	-.270,-2	.818,-3	.133,-3
04	.154,-1	.104,-1	.764,-2	-.272,-2	-.204,-2	-.311,-2	-.222,-2	-.824,-4	-.305,-2	-.222,-2
05	.115,-1	.746,-2	.478,-2	-.112,-2	-.215,-3	-.446,-3	.359,-3	.393,-3	-.268,-3	-.106,-2
06	.671,-2	.439,-2	.143,-2	-.111,-2	-.110,-2	.766,-3	.281,-4	.232,-3	.284,-2	.272,-2
07	.333,-2	.305,-2	.133,-2	-.167,-2	-.159,-2	-.460,-3	-.200,-3	.335,-3	.291,-2	.337,-2
08	.185,-2	.180,-2	.129,-2	-.105,-2	-.105,-2	-.121,-2	.496,-4	.953,-3	.115,-2	.155,-2
09	.236,-2	.145,-2	.979,-3	-.223,-3	-.577,-3	.256,-3	-.856,-5	.166,-2	.225,-3	-.405,-3
10	.231,-2	.985,-3	.720,-3	.355,-3	-.846,-3	.666,-3	.460,-3	.314,-3	-.724,-3	-.131,-2
11	.157,-2	-.806,-4	-.198,-3	.153,-3	-.604,-3	-.286,-3	.882,-3	.245,-3	-.746,-3	-.817,-3
12	.118,-2	.306,-4	-.694,-3	-.299,-3	-.448,-3	-.102,-2	.481,-3	.319,-3	-.276,-3	-.410,-4
13	171,-2	-.248,-3	-.571,-3	.148,-3	.140,-3	-.458,-3	.402,-3	.110,-4	-.441,-4	-.513,-4
14	.195,-2	-.678,-3	-.312,-3	-.772,-4	.119,-2	.389,-3	.133,-3	.271,-3	.121,-3	-.309,-3
15	.118,-2	-.633,-3	-.121,-3	-.167,-3	.496,-3	.340,-3	-.195,-3	.476,-3	-.221,-3	-.800,-3
16	.800,-3	-.320,-4	-.381,-3	.104,-3	-.168,-3	.412,-3	-.122,-3	.673,-4	-.169,-3	-.612,-3
17	.499,-3	.331,-3	-.762,-3	-.293,-3	-.292,-3	.590,-3	-.634,-4	.770,-4	.431,-3	.651,-4
18	.400,-4	.728,-3	-.610,-3	-.362,-3	-.262,-3	.825,-4	-.236,-3	.547,-3	.123,-2	.166,-3
19	.882,-4	.656,-3	-.278,-3	-.638,-4	-.222,-3	-.[illegible],-3	.185,-4	.484,-3	.761,-3	.835,-4
20	-.217,-3	.293,-3	-.501,-3	.379,-4	-.191,-3	-.493,-3	.109,-4	-.582,-4	.460,-3	.644,-4
21	.446,-4	.341,-3	-.610,-3	.392,-3	-.911,-4	-.589,-3	.205,-3	.367,-3	.451,-3	.274,-5
22	.187,-3	.314,-3	-.301,-3	.647,-3	.309,-4	-.118,-3	.308,-3	.436,-3	.150,-3	-.513,-3
23	.138,-3	.213,-3	-.171,-3	.177,-3	.129,-3	.477,-3	.297,-3	.322,-3	-.131,-3	-.345,-3
24	.435,-3	-.740,-4	-.342,-3	-.234,-3	-.421,-4	.613,-3	.221,-3	-.170,-3	-.139,-3	.244,-4
25	.920,-3	-.600,-3	-.642,-3	-.266,-3	.537,-5	.283,-3	.115,-3	-.404,-3	-.237,-3	.483,-3
26	.197,-3	-.505,-3	-.822,-3	.226,-3	-.160,-3	-.229,-3	.236,-3	-.242,-3	-.349,-3	.601,-3
27	-.246,-3	-.961,-4	-.593,-3	.520,-3	.884,-4	-.226,-3	.168,-3	.212,-4	-.261,-3	.431,-3
28	.318,-4	-.816,-3	-.194,-3	.320,-3	.457,-4	-.236,-3	.228,-3	-.255,-3	-.398,-3	.156,-3
29	.505,-4	-.836,-3	.873,-4	.223,-3	.239,-4	-.429,-3	.294,-3	-.392,-3	-.346,-3	.247,-4
30	.234,-4	.595,-4	.936,-4	.697,-4	.177,-3	-.261,-3	.227,-3	-.112,-3	.346,-5	-.263,-3
31	.963,-5	.166,-3	.193,-5	.450,-4	.189,-3	.690,-4	.274,-3	.253,-3	.168,-3	-.409,-3
32	-.142,-3	-.268,-3	.642,-4	.123,-3	-.280,-4	.284,-4	.250,-3	.394,-3	-.324,-4	-.249,-3
33	-.242,-3	-.463,-3	.235,-4	.266,-3	-.193,-3	-.268,-3	.209,-4	.317,-3	-.175,-3	.149,-3
34	-.781,-4	-.224,-3	.711,-4	.191,-3	-.258,-3	-.117,-3	-.338,-3	.165,-3	-.219,-3	.335,-3
35	.551,-4	-.205,-3	.961,-4	-.216,-4	-.232,-3	.243,-4	-.247,-3	.271,-3	-.448,-3	.216,-3
36	.375,-4	-.351,-3	-.192,-3	-.102,-4	-.150,-3	-.196,-3	.908,-4	.449,-3	-.548,-3	-.325,-4
37	.343,-3	.335,-4	-.184,-3	.109,-3	-.569,-5	-.623,-3	.977,-3	.516,-3	-.660,-4	-.589,-4
38	.352,-3	.555,-4	-.555,-4	.175,-3	-.431,-5	-.580,-3	-.133,-3	.413,-3	.122,-3	.207,-3
39	-.811,-4	-.217,-3	.423,-4	.239,-4	.190,-3	-.215,-3	-.854,-4	.615,-3	-.165,-3	.365,-3
40	-.215,-3	-.433,-3	-.399,-4	.142,-3	.121,-3	.584,-4	-.103,-3	.472,-3	-.263,-3	.254,-3
41	-.176,-3	-.355,-3	.458,-6	.200,-3	.633,-4	.179,-3	-.113,-3	.299,-3	-.179,-3	.699,-4
42	.104,-3	-.258,-4	.453,-3	-.387,-4	.616,-5	.600,-4	.473,-5	.264,-3	-.135,-3	-.368,-4
43	.462,-3	.179,-3	.304,-3	-.290,-4	-.109,-3	-.582,-5	.978,-5	-.342,-4	-.198,-3	-.459,-4
44	.270,-4	.165,-3	-.591,-6	.515,-4	-.209,-3	-.389,-4	-.473,-4	-.676,-4	-.299,-3	.195,-3
45	-.874,-4	-.530,-4	-.256,-4	.114,-3	-.159,-3	-.155,-3	-.740,-4	.264,-3	-.162,-3	.509,-3
46	.283,-3	-.128,-3	-.114,-3	-.118,-4	.261,-5	-.318,-4	-.197,-4	.214,-3	.585,-4	.442,-3
47	.318,-3	-.306,-4	.419,-4	-.211,-3	-.174,-3	.102,-3	-.176,-3	.892,-4	.413,-4	-.288,-4
48	.155,-3	.430,-4	.316,-3	-.168,-3	-.210,-3	.865,-4	-.344,-3	-.361,-3	.499,-4	-.463,-3
49	-.660,-4	.157,-3	.154,-4	-.915,-4	-.361,-4	-.796,-5	-.752,-4	-.316,-3	.921,-4	-.191,-3
50	-.346,-3	.279,-3	-.542,-4	.366,-5	.776,-4	-.603,-4	-.805,-4	-.104,-3	.562,-4	-.505,-6
51	-.214,-3	.864,-4	.269,-3	.154,-4	.583,-4	.135,-3	-.253,-3	-.144,-3	-.410,-4	-.209,-3
52	.223,-4	-.115,-4	.186,-3	-.828,-4	.151,-3	-.107,-3	-.137,-3	.139,-4	-.615,-4	-.249,-3
53	-.693,-4	-.939,-5	-.868,-4	.418,-4	-.692,-4	-.580,-3	.882,-4	.238,-3	.837,-4	.199,-4
54	-.211,-3	-.207,-3	-.142,-3	.204,-3	-.258,-3	-.358,-3	.725,-3	.184,-3	.142,-3	.127,-3
55	-.355,-3	-.810,-4	.509,-4	.335,-3	-.601,-4	.112,-3	.336,-3	-.728,-4	.290,-3	.435,-4
56	-.185,-3	-.133,-4	.405,-4	.193,-3	-.665,-5	.146,-3	.113,-3	-.107,-3	.354,-3	.176,-4
57	.751,-4	-.153,-3	-.102,-3	-.306,-4	-.133,-3	.230,-4	-.539,-4	.932,-5	.177,-3	-.111,-4
58	-.230,-4	-.111,-3	-.630,-4	-.119,-3	.177,-4	-.102,-3	-.683,-4	.104,-3	-.277,-3	-.140,-3
59	-.199,-3	-.115,-3	-.699,-4	-.855,-4	.100,-3	-.359,-4	.228,-4	-.275,-4	-.218,-3	-.124,-3
60	-.204,-3	-.164,-3	-.130,-3	-.808,-4	.101,-3	.802,-4	.681,-4	-.296,-4	-.738,-5	-.870,-4

Run No. 5 ; w component

	Separation Distance (m.)									
N	6	12	18	24	36	42	48	72	84	90
00	-.102,-2	.209,-2	.348,-2	.375,-2	-.782,-2	.423,-2		-.344,-2	-.997,-4	-.288,-2
01	-.154,-2	.509,-3	.130,-2	.106,-1	-.667,-2	-.269,-3		-.606,-2	-.390,-2	-.205,-2
02	-.596,-3	.122,-2	-.184,-2	.131,-1	.498,-2	-.360,-2		-.408,-2	-.114,-1	-.749,-3
03	.380,-2	.848,-2	-.286,-2	.406,-2	.137,-1	.233,-2		-.693,-3	-.100,-1	-.226,-2
04	.457,-2	.317,-2	-.223,-2	-.129,-2	.621,-2	.221.-2		-.442,-3	-.363,-2	.162,-2
05	.457,-2	-.416,-2	-.361,-2	-.110,-2	.625,-3	-.208,-2		-.295,-3	.269,-3	.247,-2
06	.436,-2	-.493,-2	-.246,-2	.537,-3	.137,-2	-.374,-2		-.273,-2	.371,-2	-.286,-2
07	.331,-2	-.474,-2	-.135,-2	.102,-3	-.434,-3	-.423,-2		-.530,-2	.653,-2	-.374,-2
08	.336,-2	-.281,-2	-.943,-3	-.177,-3	-.538,-2	-.262,-2		-.370,-2	.444,-2	-.274,-2
09	-.491,-3	-.218,-2	.242,-3	.201,-2	.779,-3	.939,-3		-.280,-2	-.245,-3	.215,-3
10	-.142,-2	-.166,-2	.341,-2	.288,-2	.662,-3	.117,-2		-.139,-3	-.823,-3	.194,-2
11	-.177,-2	-.531,-2	.208,-2	-.305,-3	-.216,-2	-.363,-3		.206,-3	-.635,-3	.214,-2
12	.331,-3	-.456,-2	-.155,-2	-.158,-2	-.391,-2	.769,-3		-.468,-2	.112,-2	.375,-2
13	.137,-2	.105,-3	-.947,-3	-.192,-2	-.270,-2	-.279,-3		-.534,-2	.178,-2	.141,-3
14	.263,-3	.188,-2	.758,-3	-.216,-2	.173,-2	-.211,-2		-.266,-2	.110,-2	.301,-4
15	-.300,-3	-.423,-3	-.528,-2	.193,-2	.633,-2	-.368,-2		.119,-2	-.169,-2	.463,-3
16	-.692,-3	-.314,-2	-.891,-2	.181,-2	.601,-2	-.244,-2		.316,-3	-.252,-2	-.571,-3
17	-.159,-2	-.173,-2	-.753,-2	-.700.-3	.370,-3	.157,-2		-.409,-2	-.345,-2	.334,-2
18	-.443,-2	-.137,-2	-.323,-2	-.10 ,-2	-.198,-2	-.200,-2		-.411,-2	-.137,-3	.474,-2
19	-.516,-2	-.133,-2	-.994,-3	.518,-4	-.264,-2	-.362,-2		.512,-3	.196,-2	.113,-2
20	-.116,-2	-.347,-2	-.256,-2	.104,-2	-.441,-2	-.213,-2		.238,-2	-.525,-3	-.237,-2
21	.305,-2	-.309,-2	-.200,-2	-.511,-3	-.177,-2	-.599,-3		.120,-2	.660,-3	-.174,-2
22	.207,-2	.287,-3	.247,-2	-.142,-2	.103,-2	-.116,-2		-.238,-2	.143,-4	.624,-4
23	.329,-3	.296,-2	.531,-2	-.200,-2	.276,-3	-.120,-2		-.552,-2	-.194,-2	-.978,-3
24	-.723,-3	.373,-2	.378,-2	-.243,-2	.342,-5	-.240,-2		-.523,-2	-.199,-2	.876,-3
25	-.456,-2	.138,-2	.169,-2	.809,-3	.254,-2	-.214,-2		-.187,-2	-.194,-3	.188,-2
26	-.758,-3	-.522,-3	.114,-2	.319,-2	.222,-2	.277,-2		-.105,-2	-.405,-3	-.221,-2
27	.641,-2	-.178,-2	.124,-2	-.119,-2	-.228,-3	.593,-2		-.151,-2	-.527,-2	-.300,-2
28	.334,-2	-.439,-3	.336,-2	-.336,-2	-.221,-2	.163,-2		.986,-3	-.483,-2	.413,-3
29	.626,-3	.266,-3	.375,-3	.312,-3	.324,-3	-.156,-2		.233,-3	.267,-3	.857,-3
30	-.169,-2	.196,-3	-.154,-2	.141,-2	.246,-2	-.125,-2		-.168,-2	-.151,-2	.458,-2
31	-.284,-2	-.359,-3	.897,-4	-.701,-3	.187,-2	-.248,-3		.165,-3	-.340,-2	.490,-2
32	-.326,-2	.175,-2	-.964,-3	.323,-4	.409,-2	-.125,-2		.158,-2	-.316,-4	-.798,-5
33	-.344,-2	.332,-2	.355,-3	-.184,-3	.301,-2	-.139,-2		.333,-2	.285,-2	-.168,-2
34	-.194,-2	.125,-2	.578,-3	-.340,-2	-.238,-2	-.237,-2		.297,-2	.243,-2	-.346,-2
35	-.342,-2	.634,-3	-.968,-3	-.274,-2	-.459,-2	-.284,-2		.432,-2	-.521,-3	-.301,-2
36	-.361,-2	.376,-3	.820,-3	-.261,-2	-.339,-2	-.166,-2		.489,-2	-.138,-2	.279,-2
37	-.236,-2	-.971,-3	.811,-3	-.101,-2	-.334,-3	-.173,-2		.127,-2	-.905,-3	.590,-2
38	-.298,-2	-.225,-2	.978,-3	.225,-3	.117,-2	-.146,-2		-.172,-2	-.346,-3	.105,-2
39	-.318,-2	-.525,-2	.367,-2	.558,-4	-.450,-3	-.139,-2		-.223,-2	.100,-3	-.170,-2
40	-.237,-2	-.631,-2	.318,-2	-.629,-3	.136,-2	-.152,-2		-.996,-3	-.976,-3	-.291,-2
41	-.313,-2	-.356,-2	.334,-2	-.463,-3	.257,-2	-.262,-2		.155,-2	-.205,-2	-.821,-3
42	-.771,-4	-.271,-2	.141,-2	-.136,-2	.156,-2	-.104,-2		.297,-2	-.257,-2	.247,-3
43	.230,-2	-.205,-2	.269,-3	.132,-3	.831,-3	.509,-3		.174,-2	-.110,-2	.633,-3
44	.172,-2	-.199,-2	.824,-3	.320,-2	-.179,-2	-.348,-3		.395,-3	.278,-3	.279,-2
45	.129,-2	-.269,-2	-.889,-3	.474,-2	-.352,-2	-.328,-2		-.971,-3	.152,-2	.162,-2
46	.256,-2	-.686,-3	-.389,-3	.242,-2	-.150,-2	-.614,-2		-.148,-2	.353,-2	-.143,-2
47	.170,-2	-.514,-3	-.123,-2	.412,-2	.108,-2	-.617,-2		-.745,-3	.454,-2	-.516,-2
48	.285,-2	-.198,-2	-.212,-2	.380,-2	.371,-3	-.147,-2		.127,-2	.402,-2	-.433,-2
49	.374,-2	-.292,-2	.706,-3	.160,-2	-.152,-2	.154,-2		.165,-2	.183,-2	-.434,-4
50	.764,-3	-.800,-3	.170,-2	.134,-2	-.266,-3	.331,-2		.929,-3	.870,-3	.463,-2
51	-.291,-2	.106,-2	-.691,-3	.158,-2	-.308,-4	.508,-2		.719,-3	-.114,-2	.558,-2
52	-.277,-2	.944,-3	-.278,-2	.180,-2	-.110,-4	.205,-2		.150,-2	-.932,-3	.150,-2
53	-.147,-2	-.276,-2	-.918,-3	.807,-3	.739,-4	-.106,-2		.116,-2	-.790,-3	-.847,-4
54	-.526,-3	-.294,-2	-.463,-3	.513,-3	.328,-4	.193,-3		-.405,-3	.104,-3	-.457,-3
55	-.445,-3	.198,-2	.865,-3	-.709,-3	-.249,-3	.470,-3		-.914,-3	-.797,-4	.690,-3
56	-.155,-2	.344,-2	.205,-2	.779,-3	-.443,-3	-.132,-4		.130,-2	-.273,-2	.855,-3
57	-.495,-2	.137,-2	.191,-2	-.202,-3	.209,-3	.102,-2		.827,-3	-.383,-2	.470,-3
58	-.465,-2	-.605,-3	.442,-3	-.312,-2	-.613,-3	.234,-2		.162,-3	-.190,-2	.148,-2
59	-.313,-2	.939,-3	-.219,-2	-.254,-2	-.169,-2	.288,-2		-.896,-3	.128,-2	.333,-2
60	-.215,-2	.121,-2	-.331,-2	-.203,-2	-.154,-2	.238,-2		-.145,-2	.127,-2	.315,-2

Run No. 10 ; u component

Separation Distance (m.)

N	6	12	18	24	36	42	48	72	84	90
00	.133,+1	.685	.861	.795	.114,+1	.145,+1	.968	.548	.724	.905
01	.100,+1	.537	.640	.613	.896	.107,+1	.754	.420	.560	.662
02	.382	.201	.216	.221	.335	.349	.271	.139	.213	.209
03	.774,-1	.447,-1	.423,-1	.427,-1	.770,-1	.492,-1	.372,-1	.953,-2	.306,-1	.244,-2
04	.492,-1	.350,-1	.196,-1	.269,-1	.398,-1	.104,-1	-.105,-1	-.126,-1	-.191,-1	-.320,-1
05	.514,-1	.257,-1	.197,-2	.131,-1	.302,-2	-.726,-2	-.778,-3	-.105,-1	-.234,-1	-.181,-1
06	.296,-1	.864,-2	-.773,-2	.361,-2	-.998,-2	-.607,-2	.132,-1	-.256,-2	-.918,-2	-.478,-2
07	.124,-1	.232,-2	-.592,-2	.633,-2	.972,-3	-.860,-2	-.482,-2	-.106,-2	-.557,-2	-.164,-2
08	-.591,-3	.400,-2	-.527,-2	.730,-2	.342,-2	-.214,-1	-.324,-2	.878,-3	.108,-2	-.371,-3
09	-.306,-2	.220,-2	-.696,-2	.595,-2	-.272,-2	-.178,-1	.554,-2	.671,-3	-.106,-2	.507,-3
10	-.142,-2	-.167,-2	-.764,-2	.176,-2	-.248,-2	-.136,-1	.677,-2	-.188,-2	-.357,-2	-.365,-2
11	-.623,-2	-.124,-2	-.304,-2	-.529,-3	-.530,-3	-.516,-2	.347,-2	-.327,-2	-.191,-2	-.183,-2
12	-.605,-2	.958,-3	-.386,-2	-.118,-2	-.337,-2	.240,-2	.957,-3	-.274,-2	-.338,-2	.134,-2
13	-.682,-3	.212,-2	-.524,-2	-.393,-3	-.251,-2	.564,-2	.346,-2	-.139,-2	-.265,-2	-.390,-2
14	-.922,-3	.241,-2	-.183,-2	-.123,-3	-.430,-3	.128,-2	.267,-2	-.424,-4	.767,-3	-.754,-3
15	-.449,-2	-.253,-4	-.237,-4	-.723,-3	-.229,-2	.111,-3	.974,-3	-.653,-3	.909,-3	.196,-2
16	-.349,-2	-.168,-2	-.104,-3	-.836,-3	-.224,-2	.431,-3	-.403,-3	-.353,-3	.588,-3	.706,-3
17	-.125,-2	-.128,-2	.222,-2	.397,-3	-.188,-2	-.701,-4	-.249,-2	.135,-2	.193,-2	.117,-2
18	-.322,-2	-.148,-2	.347,-2	.251,-3	-.120,-2	-.114,-2	-.139,-2	.199,-2	.766,-3	.544,-2
19	-.519,-2	-.427,-3	.776,-3	-.433,-3	-.126,-2	-.299,-2	-.118,-2	.670,-3	-.712,-3	.662,-2
20	-.435,-2	-.554,-3	-.633,-3	-.231,-3	-.564,-3	-.169,-2	-.179,-2	-.632,-3	-.109,-3	.401,-2
21	-.140,-2	-.114,-2	.700,-3	.316,-3	-.878,-3	.597,-3	-.932,-3	-.704,-3	.173,-2	.124,-2
22	-.209,-2	-.162,-2	.108,-2	.109,-2	-.187,-2	.129,-2	-.952,-4	-.468,-3	.199,-2	-.459,-3
23	-.234,-2	-.167,-2	.137,-2	.130,-2	-.196,-2	.181,-2	.221 -3	.150,-2	.925,-3	-.197,-2
24	-.249,-2	-.156,-2	.126,-2	.442,-3	-.868,-3	-.399,-3	.703,-3	.171,-2	.270,-3	-.158,-2
25	-.133,-2	-.114,-2	.191,-2	.156,-3	.303,-3	-.631,-3	.507,-3	.317,-3	.210,-3	.215,-3
26	.836,-3	-.877,-4	.929,-3	-.822,-3	.180,-3	-.505,-3	-.261,-3	-.514,-3	-.368,-3	.797,-3
27	.820,-3	.137,-4	.822,-3	-.173,-3	-.374,-3	-.102,-2	-.632,-3	-.453,-3	-.360,-3	-.200,-3
28	-.296,-3	-.655,-3	.636,-3	-.621,-3	.508,-3	-.954,-3	.299,-3	-.986,-4	.195,-3	-.896,-3
29	-.540,-3	-.475,-3	.660,-3	.514,-3	.107,-2	.193,-3	.509,-3	-.234,-3	.253,-3	-.856,-3
30	.754,-3	.138,-4	.329,-3	.832,-3	.674,-3	.249,-3	-.226,-4	-.199,-3	-.204,-3	-.484,-4
31	.890,-3	-.512,-3	-.118,-3	.801,-3	.271,-3	-.146,-3	.242,-3	-.651,-4	.384,-3	.259,-3
32	.306,-3	-.502,-3	-.665,-3	.321,-3	-.578,-3	-.394,-4	-.927,-4	-.408,-3	.225,-3	-.491,-3
33	.757,-3	-.351,-4	-.100,-4	-.139,-3	-.658,-3	-.413,-3	-.331,-3	-.668,-4	.808,-4	-.129,-2
34	.374,-3	.319,-3	-.538,-3	-.792,-5	-.594,-4	-.161,-2	.264,-3	.196,-3	.124,-3	-.489,-3
35	.223,-4	.373,-3	-.456,-3	.302,-3	.202,-3	-.995,-3	.437,-3	.335,-3	.501,-4	-.371,-4
36	.498,-3	-.950,-4	-.213,-3	.253,-3	.381,-3	.172,-3	.154,-3	.153,-3	.355,-3	.261,-3
37	.963,-3	-.502,-3	.426,-3	.180,-3	.807,-5	-.124,-3	-.674,-3	.419,-4	.161,-3	-.560,-3
38	.101,-2	-.508,-3	.386,-3	-.154,-4	.262,-3	-.833,-3	-.564,-3	-.841,-4	.658,-4	-.118,-2
39	.141,-2	-.303,-3	.655,-3	-.278,-3	.539,-3	-.592,-3	-.191,-3	.920,-4	.321,-3	-.109,-3
40	.152,-2	.835,-4	.116,-2	-.198,-3	.167,-3	-.143,-3	-.412,-3	.245,-3	.441,-3	.127,-2
41	.116,-2	.379,-3	.728,-3	.387,-4	-.229,-3	.381,-3	.188,-4	-.793,-4	.484,-3	.878,-3
42	.547,-3	.718,-3	.479,-3	.180,-3	.204,-3	-.112,-4	.886,-4	.127,-3	.144,-3	.172,-3
43	.464,-3	.706,-3	.558,-3	.233,-3	.672,-3	-.304,-3	.155,-3	.430,-3	.204,-3	-.748,-3
44	.107,-2	.204,-3	.416,-3	.230,-3	.779,-3	.155,-3	-.[illegible],-3	.237,-3	.206,-3	-.787,-3
45	.770,-3	-.454,-5	-.184,-4	-.155,-3	.512,-4	.422,-3	.176,-3	.106,-3	-.183,-3	-.426,-3
46	-.275,-4	.412,-4	-.288,-3	-.340,-3	-.565,-3	-.637,-4	-.388,-3	-.201,-3	-.477,-3	.252,-3
47	-.451,-3	.842,-4	.147,-3	-.257,-3	-.845,-3	-.331,-3	-.649,-3	-.260,-3	-.184,-3	.105,-3
48	-.597,-3	.236,-3	.385,-3	-.996,-4	.594,-3	-.254,-3	-.676,-3	.626,-4	-.677,-3	.216,-3
49	-.392,-3	.204,-3	.202,-3	-.310,-4	.837,-3	-.233,-3	-.795,-3	.162,-3	-.985,-3	.411,-3
50	.166,-3	-.239,-3	-.312,-3	.380,-4	-.199,-3	-.687,-4	-.196,-3	.340,-3	-.222,-3	.434,-3
51	.187,-3	-.152,-3	-.137,-3	.644,-4	-.320,-3	.297,-3	.540,-3	.367,-3	-.203,-3	.101,-2
52	-.147,-4	.115,-3	.397,-3	-.243,-3	-.265,-3	-.186,-3	.446,-3	.511,-3	-.520,-3	.976,-3
53	.186,-3	.105,-3	.177,-3	-.546,-4	-.281,-3	-.642,-3	-.777,-4	.324,-3	-.194,-3	.371,-3
54	.415,-4	.291,-3	-.391,-3	.189,-3	.105,-3	-.399,-3	-.332,-3	-.105,-3	-.825,-4	.416,-3
55	-.220,-4	.255,-3	-.138,-3	.141,-3	.371,-3	.198,-4	-.231,-3	-.231,-4	-.336,-3	.373,-3
56	.399,-4	.161,-3	.314,-4	.785,-4	.661,-4	.627,-4	.434,-3	-.347,-4	.280,-4	.556,-4
57	.296,-3	.128,-4	-.275,-4	-.403,-4	.277,-3	-.150,-3	.510,-3	-.550,-4	.434,-3	-.227,-3
58	.668,-3	-.390,-3	-.207,-4	-.149,-3	.633,-3	.298,-3	.777,-4	-.836,-4	.313,-3	.144,-3
59	.395,-3	-.785,-4	-.294,-4	-.163,-3	.554,-3	.379,-4	-.574,-4	-.192,-3	.991,-4	.568,-3
60	.544,-4	.300,-3	-.671,-4	-.560,-4	.211,-3	-.449,-3	-.400,-4	-.105,-3	-.645,-4	.562,-3

Run No. 10 ; v component

	Separation Distance (m.)									
N	6	12	18	24	36	42	48	72	84	90
00	.837	.432	.545	.470	.674	.851	.781	.476	.685	.850
01	.593	.308	.388	.350	.483	.609	.546	.316	.433	.521
02	.222	.124	.147	.139	.165	.205	.154	.714,-1	.83[illegible],-1	.766,-1
03	.993,-1	.655,-1	.704,-1	.590,-1	.467,-1	.465,-1	.290,-1	-.525,-2	-.148,-1	-.278,-1
04	.733,-1	.407,-1	.456,-1	.340,-1	.185,-1	.118,-1	.818,-2	-.162,-1	-.227,-1	-.320,-1
05	.426,-1	.219,-1	.200,-1	.189,-1	.732,-2	.336,-2	-.849,-6	-.821,-2	-.719,-2	-.128,-1
06	.242,-1	.165,-1	.109,-1	.127,-1	.570,-2	.744,-2	-.216,-2	-.608,-3	.206,-2	.119,-2
07	.176,-1	.117,-1	.784,-2	.701,-2	.107,-2	.297,-3	-.274,-2	.267,-2	.389,-2	.137,-2
08	.162,-1	.611,-2	.765,-3	.177,-2	-.223,-2	-.803,-2	-.202,-2	-.887,-3	.162,-2	-.595,-3
09	.141,-1	.555,-2	.101,-2	.158,-2	-.997,-4	-.578,-2	.589,-3	-.50[illegible],-3	.970,-3	.192,-2
10	.106,-1	.655,-2	.190,-2	-.226,-2	-.148,-2	-.397,-2	.119,-2	.170,-2	-.318,-3	.110,-3
11	.788,-2	.615,-2	-.557,-3	-.180,-2	.221,-2	-.111,-2	.120,-2	.102,-2	-.431,-3	.377,-3
12	.501,-2	.394,-2	-.469,-2	-.133,-2	.134,-2	.349,-3	.150,-2	-.623,-3	-.221,-2	-.182,-2
13	.405,-2	.207,-2	-.486,-2	-.162,-2	-.104,-2	.875,-3	.219,-2	-.208,-2	-.166,-2	-.196,-2
14	.407,-2	.469,-3	-.246,-2	-.138,-2	-.312,-4	-.140,-4	.528,-3	-.188,-2	-.897,-3	-.108,-2
15	.359,-2	-.340,-3	-.175,-2	-.849,-3	.164,-2	-.695,-3	.817,-3	.385,-3	.408,-3	.805,-4
16	.335,-2	-.104,-2	-.227,-2	-.904,-3	.623,-3	-.364,-3	.130,-2	.525,-3	.799,-3	-.529,-3
17	.173,-2	-.566,-3	-.142,-2	-.225,-3	-.100,-2	-.486,-5	.147,-3	.290,-3	.154,-4	-.861,-3
18	-.837,-3	-.364,-3	-.737,-3	.345,-3	-.143,-2	.751,-4	-.120,-2	.450,-3	-.165,-3	-.136,-2
19	-.837,-3	-.117,-2	-.104,-2	.964,-3	-.587,-3	-.573,-3	-.846,-4	.262,-3	-.275,-4	-.117,-2
20	-.698,-3	-.190,-2	-.129,-2	.977,-3	-.712,-3	-.995,-3	-.763,-4	-.136,-2	-.642,-3	-.416,-3
21	-.151,-3	-.947,-3	-.250,-3	-.895,-4	-.119,-2	.562,-3	-.970,-3	-.106,-2	-.446,-3	.557,-3
22	-.387,-3	.395,-3	.172,-3	-.559,-3	-.987,-3	.359,-3	-.757,-3	-.160,-3	.144,-3	.915,-3
23	.182,-3	.312,-3	-.277,-3	.624,-3	-.619,-3	.798,-4	-.110,-2	.195,-3	.260,-3	.390,-3
24	.322,-3	-.353,-3	.537,-3	.272,-3	-.716,-3	-.306,-3	-.794,-3	.212,-3	.131,-3	.465,-4
25	-.229,-3	-.285,-3	.609,-3	-.381,-3	-.446,-3	-.428,-3	.363,-3	.556,-3	-.177,-3	.372,-3
26	-.332,-3	.123,-3	-.113,-3	-.374,-3	-.439,-3	-.459,-3	.666,-3	.684,-3	-.272,-3	-.674,-3
27	.212,-3	-.653,-4	.247,-3	-.578,-4	-.511,-3	-.363,-3	-.438,-5	.195,-3	.487,-4	-.379,-3
28	.533,-3	-.306,-3	.290,-3	.264,-3	-.118,-3	.327,-3	-.470,-3	-.660,-4	-.194,-4	.384,-3
29	.551,-3	-.901,-5	-.560,-3	.485,-3	.187,-3	.456,-3	.281,-3	-.427,-3	.777,-3	.753,-3
30	-.452,-3	-.169,-3	-.890,-3	.489,-3	-.140,-3	.315,-3	-.880,-4	-.100,-2	.169,-2	.657,-3
31	-.869,-3	-.249,-3	.392,-4	.321,-3	-.275,-3	.363,-4	-.378,-3	-.781,-3	.855,-3	.150,-3
32	-.122,-2	-.132,-3	.361,-3	.625,-5	-.390,-3	-.483,-3	.155,-3	-.236,-3	-.195,-4	-.105,-3
33	-.561,-3	.120,-3	-.228,-3	-.200,-3	-.467,-3	-.105,-2	.377,-3	-.832,-4	.599,-3	-.109,-2
34	.285,-3	-.152,-3	.483,-4	-.484,-3	-.478,-3	-.213,-2	.748,-3	-.428,-3	.896,-3	-.104,-2
35	.109,-3	-.288,-4	.850,-3	-.242,-3	-.452,-3	-.208,-2	.762,-3	-.150,-3	-.139,-4	.276,-5
36	-.898,-3	-.105,-3	.155,-3	.257,-3	.255,-4	-.662,-3	.160,-3	.128,-3	-.624,-3	-.545,-4
37	-.558,-3	-.162,-3	-.687,-5	.150,-3	.221,-3	-.208,-3	.316,-4	-.204,-3	.187,-3	-.468,-3
38	.200,-3	.156,-3	.281,-3	-.554,-4	.122,-3	-.585,-3	.337,-3	-.476,-3	.181,-3	-.951,-3
39	.457,-3	.232,-3	.685,-3	-.187,-4	.312,-3	-.626,-3	.207,-3	-.430,-3	-.508,-6	-.879,-3
40	.728,-3	-.388,-5	.264,-3	.996,-4	.244,-3	-.583,-3	-.356,-3	-.146,-3	.306,-3	-.665,-4
41	.553,-3	-.745,-4	-.405,-3	.263,-4	.246,-3	.475,-3	-.333,-3	-.224,-4	.522,-3	.147,-3
42	-.173,-3	.729,-4	-.412,-3	-.804,-4	.255,-3	.463,-3	-.135,-3	.383,-5	.249,-4	-.428,-3
43	-.826,-4	.121,-3	.312,-3	.236,-3	.462,-3	-.364,-3	.550,-4	.340,-3	-.171,-3	-.554,-3
44	-.212,-3	.205,-3	.288,-3	.121,-3	.496,-3	-.265,-3	.162,-3	.602,-3	-.296,-4	.484,-3
45	-.102,-2	[illegible],-3	-.176,-3	.346,-4	.345,-3	-.261,-4	.173,-3	.407,-3	.266,-3	.707,-3
46	-.181,-2	.211,-3	.106,-3	.395,-3	.577,-3	.163,-3	.167,-3	.183,-3	-.840,-4	.447,-4
47	-.992,-3	.148,-3	.193,-3	.443,-3	.580,-3	.611,-3	.526,-4	.829,-4	-.298,-3	-.648,-3
48	-.376,-3	-.952,-4	-.213,-3	-.796,-4	.273,-3	.115,-2	-.140,-3	-.558,-5	-.367,-3	-.595,-3
49	.384,-3	-.132,-3	.815,-4	-.157,-3	-.157,-3	.794,-3	-.463,-3	.360,-4	-.212,-3	.843,-4
50	.421,-3	-.709,-5	.619,-3	.207,-4	-.450,-3	-.289,-3	-.455,-3	.821,-4	.104,-3	.136,-3
51	-.843,-3	-.170,-3	.112,-2	.319,-4	.165,-3	-.667,-3	-.127,-3	.656,-4	-.499,-3	.372,-3
52	-.233,-3	.538,-5	.312,-3	.363,-4	.337,-3	-.109,-3	-.931,-4	.380,-4	-.937,-3	.367,-4
53	.224,-3	-.114,-4	-.217,-3	-.899,-4	-.116,-3	-.305,-4	.163,-3	-.511,-5	-.268,-3	-.304,-3
54	-.426,-3	-.167,-3	-.127,-3	-.157,-3	.716,-6	-.365,-3	-.135,-3	-.125,-3	-.246,-3	.229,-3
55	-.983,-3	-.192,-3	-.182,-3	-.306,-3	.289,-3	-.251,-3	-.220,-3	-.360,-4	-.663,-3	.424,-3
56	-.113,-2	.566,-4	.604,-4	-.448,-3	-.933,-4	.471,-3	.643,-4	.365,-4	-.146,-3	.156,-3
57	-.433,-3	.365,-3	.721,-3	-.380,-3	-.240,-3	.242,-3	.686,-4	.263,-3	.909,-4	.529,-4
58	-.345,-3	.305,-3	.924,-3	-.764,-4	-.318,-3	-.454,-3	-.144,-3	.195,-3	-.740,-6	.212,-3
59	-.342,-3	.449,-3	.421,-3	.565,-4	-.579,-3	-.348,-3	-.235,-3	.724,-4	-.101,-3	.250,-3
60	-.179,-3	.510,-3	-.682,-5	.760,-4	-.650,-3	-.215,-4	-.196,-3	.769,-4	-.221,-3	.182,-3

Run No. 13 ; u component

N	Separation Distance (a.)									
	6	12	18	24	36	42	48	72	84	90
00	.146,-1	.136,-1	.136,-1	.161,-1	.171,-1	.171,-1	.214,-1	.168,-1	.180,-1	.181,-1
01	.695,-2	.645,-2	.645,-2	.758,-2	.803,-2	.804,-2	.999,-2	.783,-2	.838,-2	.840,-2
02	.595,-3	.618,-3	.522,-3	.414,-3	.459,-3	.511,-3	.460,-3	.440,-3	.470,-3	.521,-3
03	.180,-3	.167,-3	.736,-4	-.417,-4	.131,-3	.134,-3	.607,-4	.418,-4	.964,-4	.131,-3
04	.130,-3	.810,-4	-.183,-4	-.108,-4	.196,-3	.126,-3	.931,-4	-.746,-5	.101,-3	.104,-3
05	.995,-4	.979,-4	-.173,-4	.110,-4	.856,-4	.341,-4	.491,-4	-.435,-4	.119,-3	.108,-3
06	.695,-4	.473,-5	-.146,-4	.418,-5	.132,-4	-.316,-4	-.469,-5	-.658,-4	.773,-4	.710,-4
07	.242,-4	-.446,-5	-.697,-5	.211,-4	.178,-4	-.227,-4	-.337,-4	-.114,-4	.287,-4	.281,-4
08	-.152,-5	.252,-4	-.167,-5	.145,-4	.161,-5	-.520,-5	-.540,-5	.325,-4	.376,-4	-.357,-5
09	-.996,-5	.583,-4	.762,-5	-.790,-5	-.198,-4	.153,-5	.387,-4	.269,-4	.474,-4	-.348,-5
10	-.585,-5	.402,-4	.123,-4	-.163,-4	.166,-6	-.350,-5	.177,-4	.299,-4	.463,-4	-.722,-5
11	.442,-5	.443,-5	.152,-6	.108,-4	.417,-4	.302,-5	-.627,-5	.151,-4	.183,-4	-.275,-4
12	-.131,-4	-.224,-5	-.551,-5	.156,-4	.347,-4	-.634,-5	-.124,-4	-.899,-5	.369,-5	-.117,-4
13	-.754,-5	.592,-6	.132,-4	-.621,-5	.214,-4	-.928,-5	.134,-4	-.228,-4	.985,-5	.755,-6
14	.298,-5	-.571,-5	.152,-4	-.124,-4	.119,-4	-.138,-4	.291,-4	-.136,-4	-.836,-5	-.144,-4
15	-.113,-4	-.897,-5	.712,-5	-.580,-5	.275,-5	-.645,-5	.960,-5	-.589,-5	-.870,-5	-.152,-4
16	-.241,-4	-.954,-5	.909,-5	-.771,-5	-.887,-5	.404,-5	.143,-5	-.312,-4	.145,-4	-.297,-4
17	-.208,-4	-.834,-6	.150,-4	.134,-4	-.348,-5	.185,-5	-.880,-6	-.945,-5	.137,-4	-.370,-5
18	-.187,-4	.555,-5	.357,-5	.912,-5	-.917,-5	-.223,-5	.822,-6	.495,-5	-.415,-5	.240,-4
19	-.163,-4	.114,-4	-.937,-5	-.105,-4	-.173,-4	.546,-5	.492,-5	.278,-5	-.576,-5	.132,-4
20	-.471,-5	.545,-5	-.380,-5	-.418,-5	-.906,-5	.299,-6	-.144,-5	.130,-4	.691,-5	-.414,-5
21	-.303,-5	.618,-5	-.914,-6	.340,-5	-.679,-5	-.184,-5	.566,-5	.271,-4	.175,-4	-.400,-5
22	-.589,-5	.968,-5	.145,-5	-.107,-5	-.681,-5	.134,-5	.103,-4	.254,-4	.261,-4	.126,-4
23	.113,-5	.472,-5	-.947,-6	-.469,-5	-.129,-4	.167,-5	-.128,-4	.166,-4	.299,-4	.212,-4
24	.545,-5	-.585,-5	.318,-6	-.277,-5	-.140,-4	-.751,-5	-.166,-4	.212,-4	.184,-4	.107,-4
25	.938,-6	-.738,-5	.302,-6	.444,-5	-.802,-5	-.109,-4	.349,-5	.222,-4	.069,-6	.422,-5
26	.174,-6	.652,-7	-.115,-5	.203,-5	-.773,-6	-.684,-5	.203,-5	.137,-4	.192,-5	-.817,-6
27	-.176,-5	.644,-6	-.340,-5	-.325,-5	.540,-5	-.666,-5	-.459,-5	-.351,-5	.107,-4	.578,-5
28	-.360,-5	-.415,-5	-.627,-5	-.140,-5	.343,-5	-.388,-5	-.105,-4	-.151,-4	.485,-5	.221,-4
29	-.188,-5	-.616,-5	.159,-5	.517,-5	-.540,-5	.395,-5	-.963,-5	-.627,-5	.416,-5	.885,-5
30	.151,-5	-.515,-5	.167,-5	.397,-5	-.508,-5	.252,-5	.293,-5	-.786,-6	.938,-6	-.643,-5
31	.553,-5	-.176,-5	-.721,-5	-.904,-6	-.374,-6	-.912,-7	.659,-5	.168,-5	-.943,-6	-.654,-5
32	.397,-5	-.269,-5	-.758,-5	-.266,-5	.397,-5	.311,-5	.536,-5	-.405,-5	.302,-5	-.467,-6
33	-.152,-6	-.788,-5	-.660,-5	-.479,-6	.140,-5	.226,-5	.933,-6	-.423,-5	.644,-5	.210,-5
34	-.157,-5	-.102,-4	-.568,-5	.164,-5	-.655,-5	.352,-6	-.641,-5	.652,-5	.449,-5	-.114,-5
35	-.198,-5	-.667,-5	-.533,-5	-.520,-6	-.106,-4	.349,-5	-.701,-5	.656,-5	.571,-5	-.636,-6
36	-.355,-6	-.199,-5	-.497,-5	-.714,-6	-.556,-5	.413,-5	-.436,-5	.597,-6	.720,-5	.111,-5
37	-.116,-5	.464,-5	.110,-5	.221,-5	.103,-5	.231,-5	.495,-6	-.929,-6	.834,-5	.190,-5
38	-.208,-5	.847,-5	.111,-5	.460,-5	.717,-5	-.206,-5	.262,-5	.120,-5	.674,-5	.121,-5
39	-.131,-5	.459,-5	.104,-5	.321,-5	.678,-5	-.571,-5	.586,-5	.194,-5	.448,-5	-.605,-6
40	-.679,-6	-.174,-5	-.20,-5	.331,-5	.196,-5	.270,-6	.249,-5	-.340,-5	-.571,-6	-.306,-5
41	.126,-5	-.584,-5	.510,-5	.761,-5	-.206,-5	.381,-5	.156,-5	.368,-6	-.569,-5	-.812,-6
42	.214,-5	-.600,-5	.363,-5	.443,-5	-.159,-5	.202,-5	-.132,-6	.551,-5	-.738,-5	-.716,-5
43	.246,-5	-.285,-6	.286,-5	.415,-5	.949,-6	-.709,-6	.677,-5	.546,-5	-.721,-5	-.111,-4
44	.889,-6	-.137,-5	.144,-5	.217,-5	.358,-5	-.338,-5	.121,-4	.579,-5	.164,-5	-.377,-5
45	-.629,-6	-.551,-5	.150,-5	-.108,-5	.444,-5	-.139,-5	.669,-5	-.167,-5	.634,-5	.286,-5
46	-.194,-5	-.554,-5	.252,-6	-.119,-6	.153,-6	.146,-6	.271,-6	-.567,-5	-.441,-5	.600,-5
47	-.165,-5	-.285,-5	-.292,-5	.130,-5	-.140,-5	.748,-6	-.195,-5	-.160,-5	-.655,-5	.346,-5
48	-.113,-5	.250,-7	-.409,-5	-.809,-6	-.183,-5	.246,-5	.283,-5	.181,-5	-.874,-7	-.328,-5
49	.536,-6	.288,-5	.293,-6	-.115,-5	.104,-5	.279,-5	.565,-5	.182,-5	.387,-5	-.155,-6
50	.198,-5	.528,-5	.159,-5	-.760,-6	.117,-5	.855,-6	.226,-5	.160,-5	.302,-5	-.311,-5
51	.763,-6	.647,-5	-.141,-6	-.200,-6	-.260,-5	-.440,-6	.967,-6	.490,-6	.463,-5	-.367,-5
52	-.519,-6	.591,-5	-.845,-6	-.553,-7	-.406,-5	-.756,-6	-.421,-5	.178,-5	.719,-5	-.121,-5
53	-.967,-7	.310,-5	.846,-7	.160,-6	-.234,-5	.653,-6	-.282,-5	-.186,-6	.417,-5	.481,-6
54	-.379,-6	.196,-5	.814,-7	.402,-6	.626,-6	.388,-6	.548,-6	-.120,-5	.183,-5	.426,-6
55	-.416,-5	.597,-5	-.250,-5	.847,-6	.495,-5	.133,-6	.546,-5	-.125,-5	.312,-5	.111,-5
56	-.478,-5	.559,-5	-.217,-5	.720,-6	.411,-5	.366,-6	.462,-5	-.471,-6	.402,-5	.260,-5
57	-.421,-5	.963,-7	-.963,-7	.415,-6	-.103,-5	.218,-5	.100,-5	-.193,-6	.569,-5	.549,-5
58	-.421,-5	-.519,-5	.811,-6	-.379,-6	-.203,-5	.218,-5	-.174,-5	-.840,-6	.477,-5	.304,-5
59	-.263,-5	-.670,-5	.145,-5	-.160,-7	-.627,-6	.606,-6	.156,-5	-.245,-5	.375,-5	.810,-6
60	-.121,-5	-.530,-5	.117,-5	-.363,-6	.189,-5	-.736,-6	.336,-5	-.312,-5	.370,-5	.848,-6

Run No. 13 ; v component

Separation Distance (m.)

N	6	12	18	24	30	42	48	72	84	90
00	.640,-2	.597,-2	.781,-2	.745,-2	.608,-2	.804,-2	.727,-2	.712,-2	.594,-2	.762,-2
01	.315,-2	.299,-2	.356,-2	.376,-2	.306,-2	.404,-2	.365,-2	.352,-2	.293,-2	.374,-2
02	.350,-3	.299,-3	.381,-3	.400,-3	.324,-3	.429,-3	.389,-3	.372,-3	.307,-3	.299,-3
03	.110,-3	.606,-4	.665,-4	.664,-4	.871,-4	.113,-3	.891,-4	.589,-4	.396,-4	.210,-4
04	.512,-4	.495,-4	.422,-4	.433,-4	.459,-4	.576,-4	.424,-4	.357,-4	.174,-4	.250,-4
05	.233,-4	.320,-4	.344, 4	.269,-4	.186,-4	.153,-4	.344,-4	.133,-4	.126,-5	.178,-4
06	.174,-4	.172,-4	.199,-4	.343,-5	.899,-5	.563,-5	.251,-4	-.242,-5	-.047,-5	.658,-5
07	.184,-4	.102,-4	.652,-5	.447,-5	.943,-5	.190,-4	.103,-4	-.654,-5	-.443,-5	.138,-5
08	.125,-4	.995,-6	.157,-5	.972,-5	.566,-5	.135,-4	-.330,-5	-.123,-4	.954,-5	.407,-5
09	.641,-5	.569,-5	-.209,-6	.211,-4	.109,-4	.355,-5	-.286,-5	-.966,-5	.577,-5	.187,-4
10	.969,-6	-.236,-5	-.107,-5	.155,-4	.770,-5	.765,-6	-.276,-5	-.166,-4	.328,-5	.162,-4
11	-.324,-5	-.314,-5	-.904,-6	.800,-5	.393,-5	.805,-5	-.265,-5	-.126,-4	.116,-4	.376,-5
12	-.751,-5	.820,-5	-.103,-4	.463,-6	.102,-7	.137,-4	-.913,-5	.911,-5	.155,-4	-.138,-4
13	-.163,-5	.112,-4	.403,-5	.353,-5	.457,-5	.976,-5	-.138,-5	.157,-4	.165,-4	-.126,-4
14	-.865,-5	-.679,-5	.160,-4	-.295,-5	.882,-5	-.227,-6	.102,-4	.418,-5	.142,-4	-.695,-5
15	-.229,-4	-.183,-4	.155,-4	-.449,-5	.545,-5	.371,-5	.120,-4	.208,-5	.195,-4	-.613,-5
16	-.171,-4	-.880,-5	.712,-5	.608,-5	.150,-5	-.477,-5	.642,-5	.156,-4	.141,-4	-.383,-5
17	-.511,-5	.698,-6	.129,-5	.122,-4	.905,-5	-.748,-5	.370,-5	.170,-4	.275,-5	-.190,-5
18	-.377,-5	-.110,-4	.379,-5	.994,-5	.395,-5	-.733,-5	-.319,-5	-.147,-5	.195,-5	.751,-5
19	-.207,-5	-.179,-4	.100,-4	.498,-5	-.171,-5	.223,-5	-.645,-5	-.367,-5	.532,-5	.849,-5
20	.102,-5	-.131,-4	.568,-5	-.593,-5	.199,-5	-.107,-6	.246,-5	-.119,-4	.266,-4	.305,-5
21	.229,-5	-.935,-5	.447,-5	-.800,-5	.320,-5	-.911,-5	.379,-5	-.185,-4	.415,-4	-.824,-5
22	.152,-5	-.279,-5	.146,-5	-.153,-5	.482,-6	-.653,-5	.446,-5	-.114,-4	.198,-4	-.134,-4
23	-.856,-6	.222,-5	-.469,-5	.691,-6	-.138,-5	.369,-5	.424,-5	-.344,-5	-.761,-5	-.657,-5
24	-.148,-5	.243,-5	-.401,-5	.321,-5	-.149,-5	.713,-5	.653,-5	.447,-5	-.224,-4	.213,-5
25	.752,-6	.372,-5	-.207,-6	.694,-5	.245,-5	.143,-5	.466,-5	.530,-5	-.149,-4	-.116,-4
26	-.309,-5	.911,-6	-.969,-6	.323,-5	.194,-5	-.690,-6	.749,-6	-.146,-4	.136,-4	-.893,-5
27	-.681,-6	-.184,-5	.397,-5	.149,-5	-.105,-6	.278,-5	.508,-5	-.179,-4	.168,-4	-.208,-5
28	-.104,-5	-.331,-5	.662,-5	-.132,-5	-.227,-6	.393,-5	.623,-5	.899,-6	-.558,-5	-.259,-5
29	-.206,-5	-.397,-5	.648,-5	-.233,-5	.110,-5	.471,-5	.158,-6	.235,-4	-.102,-4	-.855,-5
30	-.172,-5	-.585,-6	.376,-5	.119,-5	.437,-6	.102,-5	.505,-5	.256,-4	-.230,-5	-.100,-4
31	.145,-6	.189,-5	.109,-5	.600,-6	.246,-5	.119,-5	.574,-5	.599,-5	.814,-5	-.363,-5
32	.218,-5	.215,-5	-.143,-5	-.323,-5	.425,-5	.667,-5	.340,-5	-.799,-5	.560,-5	.239,-5
33	.157,-5	.170,-5	-.218,-5	-.131,-6	.181,-5	.349,-5	-.150,-5	-.698,-5	-.369,-5	.543,-5
34	.135,-6	-.725,-6	.387,-6	.508,-5	-.133,-5	-.350,-5	-.262,-5	-.372,-5	-.990,-5	.220,-5
35	.308,-5	-.227,-5	.109,-5	.407,-5	-.858,-6	-.244,-5	.242,-5	-.337,-6	-.996,-5	-.178,-5
36	.195,-5	-.231,-5	.186,-5	.141,-5	-.130,-7	-.162,-	.203,-5	.113,-5	-.115,-4	-.293,-5
37	-.618,-6	-.921,-6	.621,-5	.139,-6	-.266,-5	-.183,-5	.682,-5	.481,-5	-.737,-5	.631,-6
38	-.205,-5	-.225,-5	.950,-5	.386,-6	-.695,-5	-.279,-5	.177,-5	.850,-5	.178,-5	.648,-6
39	-.294,-5	-.377,-5	.231,-5	.191,-5	-.418,-5	-.322,-5	-.811,-6	.482,-5	.919,-5	-.133,-5
40	-.186,-5	-.143,-5	-.170,-5	-.411,-	-.126,-5	-.257,-5	.623,-6	-.202,-5	.560,-5	.344,-5
41	-.247,-5	.318,-5	-.591,-6	-.259,-5	-.412,-7	-.370,-6	.967,-5	-.872,-5	-.338,-5	.590,-5
42	-.136,-5	.406,-5	.231,-5	.276,-6	-.963,-7	.174,-6	.732,-5	-.503,-5	-.853,-5	.322,-5
43	-.183,-5	.106,-5	.294,-5	-.161,-7	-.308,-6	.435,-6	-.132,-5	-.247,-5	-.129,-4	.491,-5
44	-.455,-6	-.166,-6	.428,-5	-.417,-5	.671,-7	-.306,-5	-.603,-5	.340,-5	-.428,-5	.901,-5
45	-.308,-6	.206,-5	.241,-5	-.854,-6	.136,-5	-.273,-5	-.269,-5	.770,-5	.154,-4	.698,-5
46	-.140,-5	.242,-5	.542,-6	.213,-5	.532,-6	.134,-5	-.103,-5	.614,-5	.148,-4	-.164,-5
47	.545,-6	-.377,-5	-.906,-6	.232,-5	.227,-6	.173,-5	-.269,-5	.305,-7	-.971,-6	-.290,-5
48	.344,-5	-.647,-5	-.545,-5	.213,-5	.124,-5	.950,-7	-.126,-5	.497,-5	-.646,-5	.506,-5
49	.254,-5	-.10[illegible],-5	-.440,-5	.325,-5	.126,-5	.600,-7	-.[illegible]-5	.112,-4	.232,-5	.123,-4
50	.134,-5	.364,-5	.351,-6	.260,-5	.505,-6	.731,-6	.560,-5	.952,-5	.142,-4	.109,-4
51	.213,-5	.220,-5	-.757,-7	.613,-6	.501,-6	-.171,-7	.256,-6	.245,-5	.142,-4	.305,-6
52	.382,-5	-.146,-5	-.612,-9	-.176,-5	.152,-5	.651,-6	-.546,-6	-.543,-5	.226,-5	-.840,-5
53	.383,-5	-.209,-5	-.266,-5	-.141,-5	.208,-5	.210,-5	-.123,-6	-.911,-5	-.789,-5	-.131,-4
54	.300,-6	-.310,-6	-.277,-5	.167,-5	.153,-5	.854,-6	-.706,-6	-.728,-5	-.100,-4	-.771,-5
55	.901,-6	-.249,-5	-.202,-5	.272,-5	.236,-6	-.250,-7	-.239,-5	-.523,-5	-.261,-5	.189,-5
56	.669,-5	-.726,-5	-.233,-5	-.209,-6	-.[illegible],-6	-.[illegible],-6	.[illegible], 5	-.327,-5	.524,-5	.965,-5
57	.615,-5	-.510,-5	-.367,-5	-.286,-6	-.101,-5	.730,-7	.499,-5	-.364,-5	.700,-5	.129,-4
58	.503,-6	-.532,-6	-.104,-6	.433,-5	-.318,-5	.245,-5	.226,-5	-.571,-5	.439,-5	.353,-5
59	.115,-6	-.139,-5	.187,-5	.309,-5	-.198,-6	.399,-5	-.274,-5	-.429,-5	-.172,-5	-.303,-5
60	.997,-6	-.231,-5	.690,-6	-.227,-6	.175,-5	.340,-5	-.217,-5	-.250,-5	-.532,-5	-.184,-5

Run No. 16 ; u component

N	Separation Distance (m.)									
	6	12	18	24	36	42	48	72	84	90
00	.291	.272	.253	.295	.323	.302	.341	.239	.257	.236
01	.237	.217	.201	.229	.242	.223	.240	.153	.158	.138
02	.124	.113	.964,-1	.932,-1	.855,-1	.711,-1	.736,-1	.238,-1	.161,-1	.197,-2
03	.883,-1	.765,-1	.582,-1	.324,-1	.136,-1	.578,-2	.105,-2	-.305,-1	-.313,-1	-.319,-1
04	.671,-1	.507,-1	.362,-1	.151,-1	-.577,-2	-.881,-2	-.254,-2	-.282,-1	-.224,-1	-.198,-1
05	.365,-1	.208,-1	.133,-1	.620,-2	-.333,-2	-.875,-2	.504,-2	-.145,-1	-.643,-2	-.860,-2
06	.160,-1	.929,-2	.417,-2	.336,-3	.582,-4	-.164,-2	.321,-2	-.488.-2	.221,-2	-.198,-2
07	.793,-2	.707,-2	.421,-2	-.991,-3	.480,-3	.249,-2	-.140,-3	.11?,-2	.424,-3	-.176,-2
08	.658,-2	.367,-2	.257,-2	-.351,-2	.119,-2	.140,-2	.753,-3	.254,-2	-.226,-2	-.616,-3
09	.553,-2	.284,-3	-.663,-3	-.492,-2	-.731,-4	-.362,-3	.105,-2	.338,-2	.910,-3	.603,-4
10	.318,-2	-.891,-3	-.268,-2	-.392,-2	-.193,-2	.886,-4	-.125,-2	.531,-3	.150,-2	-.867,-3
11	.189,-2	-.186,-2	-.226,-2	-.139,-2	-.104,-2	.114,-2	-.970,-3	-.136,-2	-.111,-2	.145,-2
12	.707,-3	-.192,-2	.426,-3	.238,-3	-.144,-2	.784,-3	.699,-3	.692,-3	.108,-3	.270,-2
13	-.892 -3	-.162,-2	.342,-4	.778,-3	-.140,-2	-.169,-3	.818,-3	.247,-3	.155,-2	.137,-2
14	-.992.-3	-.234,-2	-.195,-3	.798,-3	-.426,-3	-.967,-3	.385,-3	-.950,-3	-.475,-3	.406,-3
15	-.127,-4	-.235,-2	.131,-3	.162,-3	.148,-2	-.640,-3	-.306,-3	-.106,-2	-.476,-3	-.148,-3
16	-.632,-3	-.130,-2	-.245,-3	.980,-3	.172,-2	-.157,-3	-.712,-3	.631,-3	-.293,-3	-.334,-3
17	-.115,-2	-.217,-3	-.154,-3	.118,-2	.139,-2	.557,-4	.663,-5	.127,-2	.426,-4	-.464,-3
18	-.218,-3	-.539,-3	.668,-3	.718,-3	.102,-2	.236,-3	.815,-3	.310,-3	.672,-3	-.469,-3
19	.204,-3	-.129,-2	.109,-2	.537,-3	.619,-3	-.135,-4	.668,-3	-.113,-3	.255,-3	-.260,-3
20	.624,-3	-.667,-3	.867,-3	.242,-3	-.433,-3	-.411,-3	.383,-3	-.332,-3	-.760,-3	-.102,-2
21	.465,-3	-.219,-3	.817,-3	-.212,-3	.126,-3	-.458,-3	.368,-3	-.712,-3	-.430,-3	-.155,-2
22	-.2?0,-3	-.667,-4	.970,-3	-.558,-3	.259,-3	-.607,-3	.838,-3	-.610,-3	.216,-3	-.115,-2
23	-.590,-4	-.234,-3	.509,-3	.245,-4	-.243,-3	-.759,-3	.693,-3	.361,-3	-.107,-3	-.140,-3
24	.220,-3	-.674,-3	.813,-4	.265,-3	-.824,-3	-.590,-3	.492,-3	.269,-3	-.456,-4	.692,-3
25	-.215,-3	-.222,-3	-.310,-3	-.139,-3	-.840,-3	-.364,-3	.429,-3	-.783,-4	.222,-3	.699,-3
26	-.347,-3	-.968,-4	-.268,-3	-.115,-3	-.825,-3	-.154,-3	.279,-3	.142,-3	.451,-3	.367,-3
27	-.319,-3	-.217,-3	.424,-3	.447,-4	-.590,-3	.348,-3	.671,-3	.339,-3	.838,-4	.459,-3
28	-.901,-3	.769,-4	.333,-3	-.343,-4	-.107,-2	.417,-3	.818,-3	.511,-3	.438,-3	.138,-3
29	-.126,-2	-.939,-4	-.143,-3	-.679.-3	-.686,-3	.152,-3	.817,-3	.344,-3	.708,-3	-.614,-4
30	-.863,-3	-.342,-3	-.235,-3	-.825,-3	-.209,-3	.173,-3	.513,-3	.180,-3	.258,-3	.556,-3
31	-.417,-3	-.941,-4	-.542,-3	-.305,-3	-.902,-4	.717,-3	.504,-3	.559,-5	.326,-3	.105,-2
32	-.326,-3	.196,-3	-.407,-3	-.133,-3	.525,-6	.473,-3	.181,-4	-.162,-3	.532,-3	.454,-3
33	-.492,-3	.380,-3	.120,-3	-.174,-4	-.111,-3	.127,-3	.721,-4	-.427,-4	.242,-3	-.422,-4
34	-.437,-3	.499,-4	.294,-3	.415,-4	-.350,-3	.951,-4	.369,-3	.671,-4	-.175,-3	.985,-4
35	.179,-3	-.153,-3	.958,-4	-.158,-3	-.112,-3	-.231,-3	.533,-3	-.991,-4	-.126,-4	.486,-3
36	.374,-3	-.139,-3	-.123,-3	-.165,-3	.125,-3	-.405,-3	.512,-3	-.314,-3	.189,-3	.568,-3
37	-.127,-3	.803,-4	-.240,-3	.104,-3	.244,-3	-.242,-3	.183,-3	-.560,-3	.266,-4	.409,-3
38	-.249,-3	.250,-3	-.263,-3	.264,-3	.231,-3	-.659,-4	-.192,-3	-.492,-3	.194,-3	.504,-4
39	-.260,-3	.237,-3	-.872,-5	.110,-3	.459,-3	-.120,-3	-.387,-4	.406,-6	.221,-3	-.333,-4
40	-.263,-3	.393,-3	.632,-4	.108,-3	.185,-3	-.163,-3	-.120,-3	.471,-4	-.165,-3	.277,-3
41	-.612,-5	.501,-3	-.711,-4	.255,-3	.519,-4	-.277,-3	-.187,-3	-.101,-3	-.387,-3	.513,-3
42	-.351,-4	.434,-3	.655,-4	-.805,-4	.741,-4	-.173,-3	-.480,-4	-.885,-4	-.256,-3	.204,-3
43	-.644,-4	.137,-3	.189,-3	-.129,-3	.139,-3	-.202,-4	.458,-5	-.534.-4	-.588,-4	-.320,-3
44	-.122,-3	-.752,-4	.225,-3	.215,-3	-.440,-5	-.145,-3	-.249,-3	.915,-4	-.139,-3	-.142,-3
45	-.239,-3	-.448,-4	.226,-3	.223,-3	.155,-4	-.245,-3	-.304,-3	.221,-3	-.398,-3	.187,-3
46	-.217,-3	.133,-4	-.101,-4	.606,-4	-.114,-3	-.221,-3	-.138,-3	.430,-3	-.266,-3	.142,-3
47	-.104,-3	.109,-3	-.163,-3	.162,-3	-.202,-3	-.714,-4	.921,-5	.294,-3	-.209,-3	-.106,-3
48	-.113,-3	-.496,-5	.172,-4	.149,-3	-.103,-3	-.391,-3	.140,-3	.232,-3	-.265,-3	-.408,-3
49	-.241,-3	-.111,-3	.111,-3	.620,-4	.354,-4	-.321,-3	.167,-3	.192,-3	-.117,-3	-.127,-3
50	.197,-4	-.351,-4	.256,-3	-.580,-4	-.184,-6	-.208,-3	-.215,-4	.413,-4	-.247,-5	.130,-3
51	.326,-3	.145,-3	.279,-3	-.220,-3	.995,-4	-.274,-3	.102,-3	-.750,-4	.147,-3	.113,-3
52	.314,-3	.285,-3	.540,-3	-.230,-3	.321,-5	-.275,-3	.905,-4	-.369,-4	.228,-5	-.554,-4
53	.252,-3	.320,-3	.422,-3	-.237,-3	-.192,-4	.974,-4	-.531,-4	.984,-4	-.108,-3	-.124,-3
54	.112,-3	.532,-4	.193,-3	-.204,-3	.114,-4	.335,-3	.687.-4	.101,-3	-.605,-4	-.135,-3
55	.982,-4	.905,-4	.515,-4	-.633,-4	-.189,-4	.317,-3	.428,-3	.500,-4	.125,-3	.818,-4
56	.243,-3	.190,-3	.430,-4	-.253,-3	.722,-4	.175,-3	.410,-3	-.211,-3	.169,-3	.126,-3
57	.662,-4	-.938,-6	-.252,-4	-.310,-3	.200,-3	.342,-4	.158,-3	-.218,-3	.971,-4	-.597,-5
58	.317,-4	-.135,-3	-.161,-3	.177,-3	.196,-3	-.169,-3	.119,-3	.435,-5	-.103,-3	.674,-4
59	.184,-3	-.287,-3	-.106,-3	.256,-3	.121,-3	-.225,-3	.362,-3	.690,-4	-.181,-4	.101,-3
60	.160,-3	-.226,-3	-.289,-4	.270,-3	.978,-4	-.150,-3	.416,-3	.128,-3	.851,-4	.329,-4

Run No. 16 ; v component

	Separation Distance (m.)									
N	6	12	18	24	36	42	48	72	84	90
00	.644	.616	.620	.676	.684	.693	.614	.536	.530	.551
01	.385	.368	.368	.402	.388	.399	.359	.312	.298	.314
02	.104	.915,-1	.883,-1	.885,-1	.677,-1	.819,-1	.651,-1	.417,-1	.385,-1	.515,-1
03	.416,-1	.411,-1	.359,-1	.265,-1	.113,-1	.255,-1	.739,-3	-.176,-1	-.128,-1	-.104,-2
04	.232,-1	.282,-1	.231,-1	.131,-1	.212,-2	.125,-1	-.389,-2	-.905,-2	-.875,-2	-.483,-3
05	.110,-1	.102,-1	.782,-2	-.540,-3	-.310,-2	-.189,-2	-.575,-2	.721,-3	-.412,-2	-.748,-3
06	.711,-2	.436,-2	.561,-2	-.382,-2	-.324,-2	-.630,-2	-.301,-2	.155,-2	-.157,-2	-.189,-2
07	.772,-2	.215,-2	.688,-2	-.394,-2	-.504,-2	-.755,-2	-.316,-2	.383,-3	.232,-2	-.211,-3
08	.635,-2	-.112,-3	.312,-2	-.307,-2	-.260,-2	-.478,-2	.437,-3	.449,-3	.157,-2	-.194,-2
09	.296,-2	-.114,-2	.824,-3	-.291,-2	-.124,-2	-.214,-2	.246,-2	-.412,-3	-.193,-2	-.134,-2
10	-.488,-3	-.126,-2	.369,-3	-.240,-2	-.193,-2	-.157,-2	.741,-3	-.748,-3	-.169,-2	-.202,-3
11	-.103,-2	-.107,-2	-.556,-4	-.136,-2	-.976,-3	-.338,-4	-.120,-3	.924,-4	-.943,-3	-.513,-3
12	-.238,-2	-.103,-2	-.125,-3	-.453,-3	.100,-2	.577,-3	.134,-2	.117,-2	-.770,-3	-.895,-4
13	-.297,-2	-.133,-2	.220,-3	-.256,-3	.279,-2	-.378,-3	.172,-2	.747,-3	-.402,-3	-.112,-3
14	-.285,-2	-.103,-2	.440,-3	.137,-4	.127,-2	-.706,-3	.481,-3	-.125,-2	.135,-3	-.357,-3
15	-.155,-2	-.600,-3	.618,-3	.695,-3	-.904,-3	-.155,-3	.529,-3	-.333,-3	.356,-3	.317,-4
16	-.114,-2	-.677,-3	.813,-3	.101,-2	-.531,-3	.335,-3	.874,-3	.269,-3	.270,-3	.507,-3
17	-.125,-2	-.820,-3	.853,-3	.528,-3	-.555,-3	.733,-3	.727,-3	.137,-3	-.201,-3	.598,-3
18	-.221,-2	-.113,-2	.105,-2	.216,-3	-.758,-3	.492,-3	-.327,-3	.348,-3	-.112,-3	-.574,-3
19	-.188,-2	-.992,-3	.468,-3	.133,-3	-.371,-3	-.132,-3	-.577,-3	.624,-3	.681,-3	-.462,-3
20	-.123,-2	-.591,-3	.113,-3	.160,-3	-.842,-3	-.550,-3	-.432,-3	.446,-3	-.172,-3	.350,-4
21	-.915,-3	-.452,-3	.221,-3	.336,-3	.195,-3	-.463,-3	.306,-3	.578,-4	.318,-3	-.359,-3
22	-.413,-3	-.559,-3	.243,-3	.263,-3	-.523,-3	.524,-3	.503,-3	-.293,-3	-.991,-4	-.644,-3
23	-.345,-3	-.622,-3	.436,-3	.542,-4	-.340,-3	.964,-3	.196,-3	.176,-3	-.875,-4	-.176,-3
24	-.571,-3	-.426,-3	.560,-3	-.119,-3	-.311,-3	.635,-4	.558,-4	.161,-3	-.156,-4	.233,-3
25	-.346,-3	.590,-4	.701,-3	-.150,-4	-.320,-3	-.989,-4	.445,-4	-.174,-3	-.980,-4	.363,-3
26	-.616,-4	.537,-3	.569,-3	.179,-3	-.544,-4	-.745,-4	-.114,-3	-.269,-3	-.468,-3	.101,-3
27	.312,-3	-.761,-4	.281,-3	.743,-3	.143,-4	.258,-4	-.101,-3	-.322,-3	-.373,-3	.148,-4
28	.351,-3	-.757,-3	-.396,-3	.221,-3	.573,-4	.544,-5	-.954,-5	-.306,-3	.826,-4	.350,-4
29	.624,-4	-.565,-3	-.486,-3	-.807,-4	.394,-3	-.346,-3	.357,-4	-.164,-3	.503,-3	.101,-3
30	.330,-4	-.177,-3	-.347,-3	.486,+3	.397,-3	-.545,-3	-.303,-3	-.313,-3	.522,-3	.306,-3
31	-.193,-3	.164,-4	-.595,-3	.381,-3	.421,-4	-.378,-3	-.499,-3	-.121,-3	.385,-3	.545,-3
32	-.594,-3	.157,-3	-.852,-3	-.327,-3	.340,-4	-.492,-4	-.363,-3	.453,-3	-.185,-4	.358,-3
33	-.273,-3	.314,-3	-.652,-3	-.158,-3	.337,-3	-.237,-3	.224,-3	.303,-3	-.330,-3	.203,-3
34	-.150,-3	.443,-3	-.355,-3	.693,-4	.253,-3	-.439,-3	.459,-3	-.952,-4	-.613,-3	.175,-3
35	-.136,-3	.497,-3	-.288,-3	-.147,-3	-.181,-5	-.601,-3	.756,-4	-.270,-3	-.704,-4	.269,-3
36	.373,-5	.268,-3	-.199,-3	-.105,-3	.482,-4	-.713,-3	.865,-4	-.229,-3	.443,-3	-.120,-3
37	.262,-3	.897,-4	-.192,-3	.160,-3	.312,-4	-.392,-3	.293,-6	-.121,-3	-.221,-3	-.572,-3
38	.107,-3	.506,-4	-.186,-3	-.161,-4	-.570,-4	.246,-3	.336,-4	-.523,-4	-.408,-3	-.406,-3
39	.256,-3	.270,-3	.950,-4	-.207,-3	.258,-3	.596,-3	-.104,-3	.305,-4	-.159,-3	-.113,-3
40	.542,-3	.319,-3	.392,-3	-.152,-3	-.136,-3	.274,-3	-.221,-3	-.174,-3	-.247,-3	.315,-4
41	.208,-3	.364,-3	.248,-3	.521,-5	-.352,-3	.244,-3	-.731,-4	-.178,-3	-.234,-3	.121,-3
42	.187,-4	.161,-3	.979,-4	.148,-3	-.168,-3	.853,-4	.373,-4	-.449,-4	-.264,-3	-.142,-3
43	.130,-3	.686,-4	.447,-4	.165,-3	-.128,-3	.144,-4	-.331,-4	-.126,-3	-.159,-3	-.158,-3
44	.192,-4	.154,-3	-.259,-3	-.735,-4	.588,-4	.164,-3	.554,-5	-.296,-3	.263,-3	.241,-3
45	.912,-4	-.111,-3	-.171,-3	-.157,-3	.312,-3	.120,-3	.226,-3	-.202,-3	.712,-3	.614,-3
46	-.128,-3	.223,-3	-.308,-4	-.261,-3	.124,-3	.436,-4	.249,-4	-.780,-5	.601,-3	.571,-3
47	-.461,-3	.479,-3	-.267,-4	-.129,-3	-.737,-4	-.190,-5	-.179,-3	.186,-3	.727,-4	.206,-3
48	-.337,-3	.369,-4	-.571,-4	-.261,-4	.108,-3	-.182,-3	.457,-4	.256,-3	.680,-4	-.227,-5
49	-.298,-3	-.191,-3	-.258,-4	.987,-4	-.785,-4	.200,-3	.208,-3	.318,-3	.187,-3	.609,-4
50	-.439,-3	-.164,-3	-.139,-3	.638,-4	.100,-3	-.166,-3	.765,-4	.215,-3	-.186,-3	.267,-4
51	-.128,-3	.204,-3	-.138,-3	-.171,-3	.294,-3	-.228,-3	-.169,-3	.193,-4	-.578,-3	.168,-3
52	.173,-3	.320,-3	.199,-4	-.127,-3	.217,-3	.634,-4	-.168,-3	.187,-4	-.681,-3	.796,-4
53	.216,-3	.730,-4	.776,-4	-.260,-5	.179,-3	.338,-3	-.667,-5	.216,-3	-.161,-3	-.311,-3
54	-.811,-4	-.343,-4	-.392,-4	.255,-4	.765,-4	.247,-3	-.254,-3	.249,-3	.236,-3	-.392,-3
55	.138,-4	-.464,-4	.137,-4	.759,-4	-.151,-4	.259,-3	-.489,-3	-.319,-4	.318,-3	-.115,-3
56	.224,-3	-.683,-4	.152,-3	.828,-4	.320,-4	.129,-3	-.166,-3	-.256,-3	.527,-5	-.176,-3
57	.869,-4	-.142,-3	.315,-3	.139,-3	.224,-3	.147,-3	-.604,-4	-.307,-3	-.232,-3	-.523,-3
58	-.168,-3	-.227,-3	.235,-3	.154,-3	-.602,-4	.109,-3	-.565,-4	-.392,-3	.100,-3	-.368,-3
59	-.845,-4	-.270,-3	.148,-3	-.429,-4	.244,-5	.402,-4	.267,-3	-.409,-3	.161,-3	-.313,-3
60	-.288,-4	-.254,-3	.104,-3	-.217,-3	-.138,-3	.161,-5	.234,-3	-.405,-3	.245,-3	-.298,-3

Run No. 17 ; u component

N	Separation Distance (m.)									
	6	12	18	24	36	42	48	72	84	90
00	.393,-1	.316,-1	.294,-1	.386,-1	.279,-1	.252,-1	.325,-1	.197,-1	.114,-1	.105,-1
01	.430,-1	.328,-1	.309,-1	.336,-1	.224,-1	.199,-1	.220,-1	.112,-1	.386,-2	.267,-2
02	.337,-1	.261,-1	.234,-1	.216,-1	.108,-1	.658,-2	.663,-2	.160,-2	-.731,-3	-.250,-2
03	.209,-1	.187,-1	.133,-1	.869,-2	.629,-3	-.228,-2	.301,-2	-.562,-3	.221,-3	-.3.8,-3
04	.161,-1	.132,-1	.798,-2	.854,-3	-.234,-2	-.309,-2	-.228,-2	-.470,-2	-.248,-2	-.854,-3
05	.115,-1	.820,-2	.25[illegible],-2	-.441,-4	-.169,-2	-.343,-2	-.442,-2	-.489,-2	-.920,-3	.110,-2
06	.913,-2	.520,-2	-.19 ,-2	.331,-3	-.229,-3	-.205,-2	-.247,-2	-.308,-2	.582,-3	.233,-2
07	.680,-2	.294,-2	-.185,-2	-.167,-2	-.266,-2	-.113,-2	-.123,-2	-.135,-2	-.334,-3	.759,-3
08	.519,-2	.149,-2	-.133,-2	-.152,-2	-.146,-2	-.317,-3	-.804,-3	.126,-3	.615,-3	.684,-3
09	.279,-2	.260,-3	-.778,-3	.141,-2	.226,-2	.349,-4	.751,-3	.263,-3	.107,-2	.302,-3
10	.192,-2	-.649,-3	-.153,-2	.601,-3	.212,-2	.101,-2	.110,-2	.119,-3	-.211,-3	.645,-3
11	.225,-2	-.111,-2	-.282,-2	-.113,-2	.185,-2	.183,-2	.523,-3	.496,-3	-.144,-2	.308,-3
12	.148,-2	-.116,-2	-.239,-2	-.187,-2	.218,-2	.117,-2	.522,-3	.354,-3	-.181,-2	-.102,-2
13	.681,-3	-.172,-2	-.148,-2	-.513,-3	.154,-2	.659,-4	.236,-3	.328,-3	-.110,-2	-.102,-2
14	.307,-3	-.313,-2	-.980,-3	.151,-2	-.452,-3	-.184,-2	-.501,-4	.582,-3	-.115,-2	-.210,-4
15	-.342,-4	-.254,-2	.261,-4	.102,-2	-.185,-3	-.198,-2	.441,-3	.190,-3	-.569,-3	.702,-3
16	-.102,-3	-.139,-2	-.178,-3	.322,-3	.640,-3	-.332,-3	.414,-3	-.126,-2	.330,-3	.108,-2
17	-.454,-3	-.836,-3	-.346,-3	.575,-3	.395,-3	.441,-3	.675,-4	-.114,-2	.421,-4	.102,-2
18	-.435,-3	-.479,-3	-.141,-3	.452,-3	-.656,-3	.428,-3	-.482,-3	-.350,-3	-.164,-3	.168,-4
19	-.882,-3	-.370,-3	-.182,-3	-.782,-3	-.101,-2	.592,-4	-.103,-2	.377,-3	-.779,-4	-.638,-3
20	-.132,-2	-.602,-3	.520,-3	-.141,-2	-.145,-3	-.235,-3	-.907,-3	-.881,-4	.144,-3	-.394,-3
21	-.949,-3	-.850,-3	.918,-3	-.632,-3	.613,-3	-.441,-3	-.568,-3	-.848,-3	.435,-3	-.126,-3
22	-.636,-3	-.688,-3	.334,-3	-.300,-3	-.127,-3	.774,-4	-.152,-3	-.717,-3	.188,-3	-.276,-4
23	-.111,-2	-.378,-3	.692,-5	-.302,-3	-.602,-3	.540,-3	-.213,-3	-.405,-3	.467,-3	-.485,-3
24	-.112,-2	.420,-3	-.440,-3	-.260,-3	-.152,-3	.470,-4	.178,-3	-.649,-4	.689,-3	.726,-3
25	-.700,-3	.368,-3	-.116,-3	-.265,-4	.537,-3	-.669,-4	.178,-3	-.155,-3	.349,-3	-.624,-3
26	-.687,-3	.223,-3	.142,-3	.148,-3	.477,-3	.321,-3	-.508,-3	-.327,-3	-.225,-3	-.450,-3
27	-.762,-3	.871,-4	-.133,-3	.381,-3	.164,-3	.885,-4	-.807,-3	-.784,-4	-.145,-3	.188,-4
28	-.845,-3	.154,-3	-.144,-3	.347,-3	-.523,-5	.607,-4	-.531,-3	.453,-3	.149,-3	.895,-4
29	-.721,-3	.871,-4	.519,-4	.168,-3	.738,-5	.184,-3	-.433,-3	.269,-3	-.120,-3	.128,-3
30	-.751,-3	.748,-4	.789,-5	-.686,-5	.135,-3	.131,-3	-.182,-3	-.407,-4	-.167,-3	.283,-3
31	-.577,-3	.340,-3	.341,-3	.854,-4	.199,-3	.501,-3	.148,-3	.247,-3	.120,-3	.614,-3
32	-.623,-3	.358,-3	.497,-3	.150,-3	.987,-4	.589,-3	.864,-4	.255,-3	.205,-3	.345,-3
33	-.775,-3	.663,-4	.248,-3	-.378,-4	.343,-3	.205,-3	.118,-3	-.964,-4	.192,-3	-.125,-3
34	-.593,-3	.236,-3	.991,-4	.116,-3	.857,-4	.211,-3	.360,-3	-.446,-4	.105,-3	-.305,-3
35	-.361,-3	.516,-3	-.441,-4	-.779,-4	-.106,-3	.245,-3	.223,-3	.106,-3	-.783,-4	-.175,-3
36	-.368,-3	.470,-3	-.871,-4	-.134,-3	.170,-3	.202,-3	-.226,-3	.121,-3	-.162,-3	-.211,-3
37	-.428,-3	.964,-4	-.191,-3	-.170,-4	.511,-3	.718,-4	-.255,-3	.161,-3	-.205,-3	-.252,-3
38	-.837,-3	.193,-3	-.336,-3	-.630,-4	.120,-3	-.142,-4	.475,-4	.481,-4	-.249,-4	-.149,-3
39	-.647,-3	.316,-3	-.447,-3	-.107,-3	-.529,-4	.616,-4	.917,-4	-.143,-3	.131,-3	-.197,-3
40	-.248,-3	.210,-4	-.114,-3	.255,-3	-.612,-4	.125,-3	-.177,-3	-.114,-3	.167,-3	-.173,-3
41	-.225,-3	.230,-4	-.165,-4	.205,-3	-.227,-3	.300,-3	-.879,-4	.921,-4	.544,-4	-.127,-3
42	-.274,-3	.381,-3	-.115,-3	-.138,-3	-.175,-3	.246,-3	.445,-3	.926,-4	-.222,-3	-.562,-4
43	-.263,-3	.132,-3	-.692,-4	-.161,-3	-.197,-4	.212,-3	.323,-3	-.121,-3	.892,-5	-.804,-4
44	-.111,-3	-.162,-3	-.101,-3	-.279,-3	.725,-4	.147,-3	.198,-4	-.295,-4	.222,-3	-.337,-3
45	-.345,-4	-.253,-3	-.130,-4	-.355,-3	.991,-4	-.135,-3	.433,-7	.698,-5	.366,-5	-.287,-3
46	.382,-5	-.220,-3	.232,-4	-.202,-3	.205,-3	-.294,-3	.760,-4	.143,-4	.109,-3	-.597,-4
47	.115,-3	-.184,-4	-.430,-4	.133,-3	.193,-3	-.148,-3	.511,-4	.707,-4	.337,-3	.141,-3
48	.243,-3	.104,-3	-.894,-4	.144,-3	.132,-3	.310,-4	-.515,-4	-.880,-4	.130,-3	.407,-3
49	.135,-3	-.679,-4	-.992,-4	.992,-4	-.104,-3	.841,-4	-.699,-4	-.294,-3	-.150,-4	.237,-3
50	.120,-3	-.746,-4	.493,-4	-.575,-4	-.134,-3	.913,-4	-.146,-4	-.179,-3	-.108,-4	-.223,-3
51	.304,-4	.298,-4	-.805,-4	-.155,-3	.627,-4	.693,-4	-.105,-3	.119,-4	-.739,-4	-.374,-3
52	-.212,-3	-.706,-4	-.193,-3	-.157,-3	.138,-3	.119,-4	.508,-4	.386,-4	-.255,-4	-.187,-3
53	-.125,-3	-.113,-3	-.160,-4	.221,-4	.152,-3	-.352,-4	.157,-3	.897,-4	-.125,-3	.745,-4
54	.125,-3	-.148,-4	.458,-3	.145,-3	.904,-4	-.511,-4	.133,-3	.573,-4	-.685,-4	.820,-4
55	.212,-3	.107,-3	-.000,-5	.126,-3	.791,-4	.560,-4	.239,-3	-.267,-4	.178,-3	-.243,-4
56	.594,-4	.155,-3	-.428,-5	.142,-3	.669,-4	-.145,-4	.146,-3	.200,-4	-.170,-4	-.117,-3
57	-.161,-3	.351,-4	.358,-4	.115,-3	.396,-4	-.207,-3	.860,-4	-.438,-4	-.231,-3	-.892,-4
58	-.112,-3	-.544,-4	.127,-3	.978,-4	-.270,-4	-.341,-3	.238,-4	.123,-3	-.371,-4	.212,-3
59	.378,-4	-.279,-4	.109,-3	.947,-4	-.185,-3	-.249,-3	.600,-4	.295,-3	.712,-4	.469,-3
60	.498,-4	-.281,-4	.373,-4	.578,-4	-.220,-3	-.105,-3	.115,-3	.266,-3	.519,-4	.380,-3

Run No. 17 : v component

Separation Distance (m.)

N	6	12	18	24	36	42	48	72	84	90
00	.761,-2	.649,-2	.618,-2	.545,-2	.478,-2	.568,-2	.504,-2	.597,-2	.795,-2	.793,-2
01	.537,-2	.431,-2	.368,-2	.334,-2	.277,-2	.337,-2	.277,-2	.360,-2	.575,-2	.587,-2
02	.413,-2	.219,-2	.186,-2	.363,-3	.124,-2	.132,-2	.747,-3	.132,-2	.384,-2	.500,-2
03	.346,-2	.105,-2	.472,-3	-.866,-3	.993,-3	.108,-2	.653,-3	.100,-3	.299,-2	.445,-2
04	.244,-2	.161,-3	-.209,-3	-.605,-3	.348,-3	-.833,-4	.688,-4	-.667,-3	.177,-2	.373,-2
05	.172,-2	-.250,-3	-.497,-3	-.948,-3	-.107,-3	-.660,-3	.232,-3	-.653,-3	.426,-3	.268,-2
06	.865,-3	-.136,-2	-.108,-2	-.733,-3	-.390,-3	-.595,-3	.183,-3	-.619,-3	-.517,-3	.918,-3
07	-.199,-3	-.202,-2	-.418,-3	-.412,-4	-.556,-3	-.533,-3	-.358,-4	.132,-3	-.111,-2	.238,-3
08	-.733,-3	-.197,-2	.197,-3	.474,-3	.775,-4	-.145,-3	.562,-3	.575,-3	-.940,-3	.157,-3
09	-.675,-3	-.158,-2	.356,-3	.537,-3	.160,-3	.574,-3	.387,-3	.373,-3	-.209,-3	-.480,-3
10	-.772,-3	-.124,-2	.562,-3	-.108,-3	.201,-3	.934,-3	.282,-3	-.236,-3	.295,-3	-.336,-3
11	-.936,-3	-.114,-2	.974,-3	-.157,-4	279,-3	.482,-3	.416,-3	-.437,-3	.559,-3	-.257,-3
12	-.143,-2	-.109,-2	.788,-3	.254,-3	.421,-3	-.171,-3	-.123,-3	-.207,-3	.651,-3	-.381,-3
13	-.165,-2	-.910,-3	.405,-3	.932,-4	.409,-3	-.638,-3	-.115,-3	-.125,-3	.424,-3	-.942,-4
14	-.132,-2	-.537,-3	-.114,-3	-.440,-3	.221,-3	-.361,-3	.478,-4	-.597,-4	-.277,-4	.435,-3
15	-.650,-3	.182,-3	-.301,-3	-.768,-3	-.105,-3	.145,-3	.971,-4	.809,-4	-.168,-3	.615,-3
16	-.239,-3	.392,-3	-.111,-3	-.694,-3	-.371,-3	.279,-3	-.636,-4	.175,-3	-.105,-3	.729,-3
17	.894,-4	.350,-3	-.135,-3	-.366,-3	-.287,-3	-.619,-4	-.187,-3	.977,-4	-.200,-3	.108,-2
18	.154,-3	.530,-3	-.687,-4	-.724,-4	-.233,-3	-.904,-4	.219,-3	-.403,-3	-.159,-3	.876,-3
19	-.124,-3	.648,-3	.243,-3	.282,-4	-.291,-3	-.197,-3	.393,-3	.445,-4	.149,-3	.577,-3
20	-.697,-8	.171,-3	.263,-3	-.556,-4	-.230,-3	-.405,-3	.143,-3	.472,-3	-.746,-4	.511,-3
21	.532,-3	-.142,-3	.720,-4	.166,-5	.189,-3	-.276,-3	-.665,-4	.428,-3	-.142,-3	.395,-3
22	.387,-3	-.309,-3	.149,-3	.312,-3	.383,-4	.570,-4	.176,-3	.180,-3	.123,-3	.432,-3
23	.451,-3	-.370,-3	.160,-3	.278,-3	-.533,-3	-.191,-3	.157,-3	-.136,-3	.255,-3	.293,-3
24	.424,-3	-.224,-3	.174,-3	-.841,-4	-.432,-3	-.159,-3	.797,-4	-.829,-4	-.216,-3	-.640,-5
25	.216,-3	-.337,-4	.341,-4	-.117,-3	-.207,-3	-.688,-4	.185,-3	-.299,-3	-.530,-3	.107,-4
26	-.105,-3	.154,-3	-.227,-3	.178,-4	-.491,-3	-.183,-3	.361,-3	-.121,-3	-.271,-3	-.412,-4
27	.760,-4	.180,-3	-.684,-4	-.914,-4	-.246,-3	-.404,-3	.488,-3	.209,-3	-.361,-3	-.145,-3
28	.196,-3	.250,-3	.101,-3	-.138,-3	-.105,-3	-.293,-3	.249,-3	.112,-3	-.311,-3	-.210,-3
29	-.347,-4	-.723,-4	.662,-4	.741,-4	-.155,-3	-.197,-3	.662,-4	-.164,-3	.238,-3	-.130,-3
30	-.435,-4	-.215,-3	.143,-3	-.245,-4	-.117,-3	-.869,-4	.175,-3	-.176,-3	.695,-3	-.196,-3
31	-.105,-3	-.129,-3	.218,-3	-.919,-5	.110,-3	.828,-4	.121,-3	-.154,-3	.825,-3	-.495,-3
32	.746,-4	-.216,-3	.245,-3	.716,-4	.217,-3	.313,-3	.177,-3	-.175,-3	.621,-3	-.561,-3
33	.409,-3	-.148,-3	.511,-4	.703,-4	.722,-4	.869,-4	.652,-4	-.910,-4	.337,-3	-.247,-3
34	.416,-3	.241,-4	-.426,-4	.143,-3	-.835,-5	-.209,-3	-.154,-3	-.812,-4	.124,-3	-.152,-3
35	.537,-4	.119,-3	.224,-3	.138,-3	-.154,-3	-.516,-4	.121,-3	.113,-3	-.278,-3	-.468,-5
36	-.289,-3	.394,-4	.340,-3	.234,-3	-.232,-3	-.200,-4	.539,-3	.388,-3	-.545,-3	.869,-4
37	-.356,-3	-.710,-4	-.591,-5	.391,-3	.360,-4	-.255,-4	.243,-3	.280,-3	-.399,-3	-.130,-3
38	.208,-3	-.646,-4	.334,-4	.185,-3	.205,-3	.611,-5	.606,-4	.694,-4	-.344,-3	-.227,-3
39	.187,-3	-.150,-4	.156,-3	.777,-4	.127,-3	.173,-3	.101,-3	.244,-3	-.302,-3	-.179,-3
40	.948,-4	-.658,-4	-.667,-4	.194,-3	-.378,-3	-.172,-3	.128,-3	.307,-3	-.121,-3	-.148,-3
41	.116,-3	.138,-4	-.146,-3	.193,-3	-.483,-3	-.263,-3	-.172,-4	.138,-3	.330,-3	.479,-4
42	.661,-4	.229,-3	-.109,-3	.135,-4	-.644,-4	-.115,-3	.353,-4	.433,-4	.418,-3	.358,-3
43	-.173,-4	.268,-3	-.238,-3	.597,-4	.201,-3	-.130,-3	.386,-4	.242,-3	.341,-3	.378,-3
44	-.578,-4	.127,-3	-.442,-3	-.449,-4	.147,-3	.261,-4	-.277,-3	.209,-3	.174,-3	.119,-3
45	.222,-4	-.468,-4	-.227,-3	.916,-4	-.320,-4	.193,-3	-.393,-3	-.242,-3	.153,-3	-.604,-4
46	.118,-3	-.139,-3	-.401,-4	.170,-3	.133,-3	.325,-4	-.104,-3	-.199,-3	.180,-3	-.254,-3
47	-.766,-4	.136,-3	.109,-3	-.133,-4	-.713,-4	-.491,-4	.118,-3	.110,-3	.329,-3	-.329,-3
48	-.141,-3	.277,-3	.112,-3	-.150,-3	-.339,-3	.123,-3	.103,-3	-.875,-4	.214,-3	-.363,-3
49	-.149,-3	.674,-4	-.146,-3	-.186,-3	-.227,-3	.245,-3	.668,-4	-.373,-3	-.157,-3	-.295,-4
50	-.108,-3	-.447,-4	-.147,-3	-.235,-3	-.100,-3	.298,-4	.340,-3	-.313,-3	-.849,-4	.213,-3
51	-.836,-4	-.826,-4	-.147,-3	-.163,-3	.112,-3	.558,-4	.230,-3	-.450,-4	-.260,-4	-.758,-4
52	.250,-4	-.115,-3	-.203,-4	.473,-4	.240,-3	.334,-3	-.164,-3	.630,-4	-.601,-4	-.204,-3
53	-.180,-4	-.385,-4	.250,-3	.308,-3	.197,-3	.359,-3	-.104,-3	-.181,-4	.227,-3	-.601,-4
54	-.117,-3	.210,-3	.241,-3	.336,-3	.342,-3	-.562,-4	.610,-4	.330,-4	.291,-3	.194,-3
55	.460,-6	.242,-3	-.328,-4	.274,-3	.244,-3	-.281,-3	-.103,-3	.743,-4	.136,-3	.208,-3
56	.229,-3	.100,-3	-.205,-4	.113,-3	.146,-4	-.724,-4	-.112,-3	.464,-3	.283,-3	.142,-3
57	.537,-4	.708,-4	.207,-3	.667,-4	.973,-5	-.621,-4	-.657,-4	.356,-3	.108,-3	.901,-4
58	-.282,-3	-.108,-3	.314,-3	.125,-3	-.201,-4	.251,-4	-.250,-3	.194,-3	-.171,-3	.717,-4
59	-.275,-3	-.105,-3	.455,-4	.133,-3	.372,-4	.238,-4	-.266,-3	.874,-4	-.169,-3	.467,-4
60	-.147,-3	-.372,-4	-.105,-3	.114,-3	.119,-3	-.351,-4	-.197,-3	.384,-4	-.153,-3	-.376,-4

Run No. 17 ; w component

N	Separation Distance (m.)									
	6	12	18	24	36	42	48	72	84	90
00	.417,-3	.266,-3	.420,-3	-.215,-3	-.263,-3	-.252,-3	.898,-4	.312,-5	.153,-3	-.506,-3
01	.521,-3	.265,-3	.496,-3	-.124,-3	-.830,-4	-.218,-3	.198,-3	-.651,-4	.196,-3	-.512,-3
02	.879,-3	.421,-3	.518,-3	.310,-3	.368,-4	-.155,-3	.368,-4	-.586,-3	-.227,-4	-.269,-3
03	.102,-2	.564,-3	.562,-3	.508,-3	.244,-3	.130,-3	-.214,-3	-.382,-3	-.105,-3	.662,-5
04	.978,-3	.370,-3	.181,-3	.217,-3	.302,-3	.351,-3	-.758,-4	-.216,-4	-.623,-5	.231,-3
05	.590,-3	.228,-3	-.806,-4	.180,-3	.133,-3	.243,-3	.298,-4	-.645,-4	-.116,-3	.160,-3
06	.536,-3	.350,-3	.337,-3	.391,-3	.277,-3	.251,-3	.159,-3	-.122,-3	-.755,-4	.977,-4
07	.813,-3	.137,-3	.273,-3	.397,-4	.127,-3	.254,-3	.134,-3	-.157,-3	.254,-3	.610,-3
08	.656,-3	-.161,-3	-.213,-3	-.290,-3	-.412,-3	.361,-3	-.362,-4	-.204,-3	.457,-3	.941,-3
09	.478,-3	-.248,-3	-.237,-3	-.309,-3	-.651,-3	.441,-4	-.322,-3	-.478,-4	.197,-3	.427,-
10	.617,-3	-.199,-3	-.306,-3	-.160,-3	-.633,-3	-.186,-3	-.155,-3	.263,-4	-.113,-3	.411,-4
11	.413,-3	-.197,-3	-.396,-3	.329,-7	-.307,-3	-.919,-4	.[illegible],-4	-.223,-3	-.102,-3	-.508,-4
12	.160,-3	-.309,-3	-.177,-3	-.207,-3	.108,-3	-.187,-3	.237,-4	-.422,-3	.802,-4	.149,-3
13	.281,-3	-.373,-3	-.706,-4	-.113,-3	.471,-4	-.484,-3	-.623,-4	-.257,-3	.285,-3	.193,-3
14	.440,-3	-.361,-3	-.276,-3	.362,-3	-.247,-3	-.673,-3	-.199,-4	-.111,-3	.348,-3	.131,-3
15	.216,-3	-.983,-4	-.103,-3	.290,-3	-.216,-4	-.401,-3	.935,-4	.726,-4	.667,-4	.868,-4
16	.211,-3	.321,-4	.118,-3	-.439,-4	.227,-3	.569,-4	.137,-3	.940,-4	-.161,-4	-.455,-4
17	.185,-3	.130,-4	.143,-3	-.136,-3	-.164,-3	.152,-3	.382,-4	-.549,-4	-.366,-5	-.122,-3
18	.909,-5	.293,-4	.176,-3	.095,-4	-.266,-3	.106,-3	.190,-4	-.177,-3	.229,-4	-.152,-3
19	-.543,-4	-.386,-3	.803,-4	.105,-3	-.732,-4	.660,-5	-.817,-4	-.234,-3	.669,-5	-.960,-4
20	.459,-4	-.752,-3	.204,-3	-.304,-3	.156,-3	-.344,-3	-.206,-4	-.192,-3	.876,-4	-.930,-4
21	.424,-3	-.588,-3	.125,-3	-.292,-3	.240,-3	-.204,-3	.310,-4	-.133,-3	.362,-4	-.231,-3
22	.479,-3	-.154,-3	-.215,-5	-.775,-4	-.116,-3	-.377,-4	-.360,-4	-.107,-3	.191,-3	-.168,-3
23	.118,-3	-.923,-4	.440,-4	-.781,-5	-.396,-3	-.108,-3	-.180,-3	-.461,-4	.350,-3	-.648,-4
24	-.892,-4	.442,-4	-.414,-4	-.472,-4	-.472,-3	-.135,-3	-.636,-4	-.946,-4	.152,-3	-.180,-3
25	.171,-3	.271,-3	-.927,-4	-.510,-4	-.471,-3	-.848,-5	.140,-3	.108,-3	-.196,-3	-.514,-4
26	.446,-3	.166,-3	.142,-3	-.413,-4	-.229,-3	.103,-3	.249,-3	.176,-3	-.216,-3	.339,-4
27	.312,-3	.224,-3	.400,-3	-.178,-3	-.207,-4	-.978,-4	.181,-3	.367,-4	-.187,-3	.142,-4
28	.672,-4	.186,-3	.327,-3	-.120,-3	.713,-4	-.857,-4	.399,-4	-.731,-4	-.843,-4	-.992,-5
29	-.252,-4	.586,-4	-.527,-4	-.927,-4	.195,-3	.161,-3	-.886,-4	-.128,-3	.457,-4	-.113,-3
30	.120,-3	.373,-4	-.117,-3	-.154,-3	.888,-4	.845,-4	-.750,-4	.204,-4	.140,-3	-.713,-4
31	.917,-4	.319,-3	.127,-3	-.294,-3	.109,-4	-.436,-4	.172,-3	.339,-4	.106,-3	-.506,-4
32	-.143,-3	.329,-3	.275,-3	-.376,-3	-.120,-4	-.234,-3	.148,-3	.463,-4	.223,-4	.323,-4
33	-.128,-3	-.226,-4	.192,-3	.563,-4	.401,-5	-.340,-3	.142,-3	.171,-3	.421,-4	-.878,-4
34	.358,-4	-.418,-3	-.880,-4	.295,-3	-.292,-3	-.293,-3	.270,-3	.162,-3	-.643,-4	-.249,-3
35	-.138,-3	-.180,-3	-.452,-4	.630,-4	-.349,-3	-.113,-3	.152,-3	.111,-3	-.145,-3	-.862,-4
36	-.269,-3	.277,-3	-.184,-3	-.203,-3	-.287,-3	.170,-3	.156,-4	.167,-3	-.138,-3	.574,-4
37	-.357,-3	.230,-3	-.217,-3	-.188,-3	-.201,-3	.115,-3	.101,-3	.147,-3	-.259,-3	.207,-4
38	-.595,-3	.109,-3	-.153,-3	-.392,-4	-.882,-4	.594,-4	.747,-4	.706,-4	-.248,-3	-.392,-4
39	-.437,-3	.128,-3	-.204,-3	.183,-4	.187,-4	.117,-3	.306,-4	.361,-4	-.791,-4	.199,-5
40	-.308,-3	.104,-3	-.148,-3	.852,-4	.144,-3	-.916,-5	.358,-4	.209,-4	.242,-4	.309,-5
41	-.489,-3	.996,-4	-.206,-3	-.281,-4	.948,-4	-.226,-4	.782,-4	.125,-3	-.184,-4	.636,-4
42	-.368,-3	-.177,-3	-.234,-3	-.251,-3	.397,-4	-.149,-3	.125,-3	.309,-4	-.153,-3	.181,-3
43	-.344,-3	-.420,-3	-.138,-3	-.208,-3	.995,-4	-.273,-3	.160,-3	-.239,-3	-.106,-3	.254,-3
44	-.384,-3	-.137,-3	.765,-4	-.142,-5	.145,-3	-.100,-3	.147,-3	-.228,-3	.375,-4	.101,-3
45	-.319,-3	.163,-4	.178,-3	-.227,-4	.189,-3	.118,-3	.980,-5	-.166,-3	-.946,-4	.151,-5
46	-.369,-3	-.288,-3	.190,-3	-.577,-4	.138,-3	.181,-3	-.181,-4	-.777,-4	-.107,-3	.584,-5
47	-.579,-3	-.248,-3	.297,-3	-.681,-4	-.142,-4	-.111,-3	.908,-4	.949,-4	.584,-4	-.565,-4
48	-.562,-3	-.490,-5	.289,-3	-.645,-4	-.118,-3	-.290,-3	.166,-3	.982,-4	.129,-3	-.174,-3
49	-.414,-3	.635,-4	.123,-3	-.339,-4	.886,-4	-.159,-3	.178,-4	-.186,-4	.844,-4	-.213,-3
50	-.432,-3	.120,-3	.125,-3	-.157,-3	.108,-3	-.286,-4	-.865,-4	.105,-4	.110,-3	-.742,-4
51	-.238,-3	.285,-4	.285,-3	-.221,-3	-.119,-3	-.691,-4	.175,-4	-.700,-5	.675,-4	-.264,-4
52	.645,-5	-.272,-4	.210,-3	-.812,-4	-.163,-3	-.212,-3	.315,-4	-.155,-3	.506,-4	-.232,-3
53	-.155,-3	-.160,-4	.723,-4	-.190,-3	-.605,-4	-.288,-4	-.567,-4	-.279,-4	-.309,-4	-.221,-3
54	-.330,-3	-.186,-4	-.230,-3	-.439,-3	-.645,-4	.165,-3	-.187,-3	.224,-3	-.157,-4	-.174,-3
55	-.305,-3	-.588,-4	-.209,-3	-.457,-3	-.149,-4	.153,-3	-.198,-3	.204,-3	-.322,-4	-.221,-4
56	-.291,-3	-.142,-3	-.472,-4	-.170,-3	.299,-4	-.158,-4	-.102,-3	.830,-4	-.176,-3	.812,-4
57	-.210,-3	-.749,-4	.276,-4	.512,-4	-.112,-3	-.162,-3	-.878,-4	.525,-4	-.159,-3	.163,-3
58	-.649,-4	.164,-3	.401,-4	.148,-3	-.698,-4	-.277,-3	-.182,-3	.167,-3	-.121,-3	.317,-3
59	-.241,-3	.205,-3	-.101,-3	.155,-3	.117,-3	-.153,-3	-.252,-3	.174,-3	-.528,-4	.177,-3
60	-.265,-3	.149,-3	-.232,-3	.965,-4	.135,-3	-.736,-4	-.183,-3	.770,-4	.105,-4	.444,-4

Run No. 21 ; u component

Separation Distance (n.)

N	6	12	18	24	36	42	48	72	84	90
00	.456	.384	.395	.378	.413	.423	.323	.278	.287	.301
01	.302	.275	.264	.258	.275	.265	.202	.172	.166	.167
02	.107	.126	.990,-1	.115	.106	.841,-1	.978,-1	.632,-1	.540,-1	.434,-1
03	.588,-1	.661,-1	.481,-1	.536,-1	.419,-1	.282,-1	.496,-1	.207,-1	.164,-1	.109,-1
04	.454,-1	.415,-1	.305,-1	.169,-1	.831,-2	.311,-2	.158,-1	-.166,-2	-.172,-2	-.485,-3
05	.387,-1	.316,-1	.231,-1	.136,-2	-.133,-1	-.131,-1	.661,-2	-.123,-1	-.115,-1	-.819,-2
06	.462,-1	.304,-1	.224,-1	-.391,-2	-.154,-1	-.137,-1	-.652,-2	-.148,-1	-.116,-1	-.114,-1
07	.399,-1	.214,-1	.139,-1	-.766,-2	-.131,-1	-.119,-1	-.885,-2	-.934,-2	-.310,-2	-.182,-2
08	.288,-1	.175,-1	.105,-1	-.531,-2	-.134,-1	-.108,-1	-.452,-2	-.224,-2	.472,-2	.853,-2
09	.208,-1	.155,-1	.897,-2	-.260,-3	-.908,-2	-.581,-2	-.794,-2	-.446,-2	-.560,-2	.635,-2
10	.154,-1	.125,-1	.642,-2	-.221,-2	-.624,-2	-.128,-2	-.607,-2	-.572,-2	-.827,-3	.156,-2
11	.112,-1	.982,-2	.279,-2	-.465,-2	-.314,-2	.835,-3	-.211,-2	-.366,-2	.138,-2	.228,-2
12	.103,-1	.539,-2	-.278,-2	-.177,-2	-.260,-2	.314,-3	.843,-5	-.214,-2	.364,-2	.452,-2
13	.101,-1	.333,-2	-.439,-3	.727,-5	-.426,-2	-.181,-2	.169,-2	-.437,-4	.231,-2	.227,-2
14	.858,-2	.525,-2	.312,-2	-.193,-2	-.254,-2	-.171,-2	.142,-2	.162,-2	-.250,-3	-.454,-3
15	.868,-2	.474,-2	.131,-2	-.519,-3	-.413,-4	-.159,-2	.136,-2	-.118,-2	-.723,-3	-.978,-3
16	.779,-2	.396,-2	-.100,-2	-.139,-3	.156,-2	-.961,-3	.148,-2	-.299,-2	-.113,-2	-.174,-3
17	.697,-2	.310,-2	-.399,-2	-.262,-3	.376,-2	.797,-4	.248,-2	-.239,-2	.239,-3	-.125,-2
18	.635,-2	.227,-2	-.455,-2	.169,-2	.597,-2	.156,-3	-.521,-3	-.800,-3	.436,-3	-.253,-2
19	.721,-2	.234,-2	-.265,-2	.189,-2	.665,-2	.403,-2	-.271,-2	.203,-3	-.851,-3	-.293,-2
20	.545,-2	.200,-3	-.229,-3	.220,-2	.367,-2	.442,-2	-.601,-3	.299,-3	.584,-3	-.470,-3
21	.555,-2	.102,-3	-.623,-4	.328,-2	-.134,-2	-.595,-3	-.505,-3	-.577,-4	.307,-3	-.101,-2
22	.670,-2	.881,-3	-.161,-2	.339,-2	-.177,-2	-.156,-2	-.799,-3	.104,-2	.493,-4	-.267,-2
23	.350,-2	.101,-2	-.229,-2	.155,-2	-.116,-4	.857,-3	-.402,-3	.203,-2	.126,-3	-.304,-2
24	.138,-2	-.774,-4	-.215,-2	.102,-2	-.241,-3	.455,-3	-.149,-2	.841,-3	-.511,-3	-.131,-2
25	.226,-3	-.794,-3	-.223,-2	.265,-3	-.884,-3	-.558,-4	-.610,-3	-.154,-3	-.543,-3	.971,-3
26	.124,-2	-.757,-3	-.172,-2	-.275,-3	-.548,-3	-.719,-3	-.199,-3	-.107,-3	.685,-4	.117,-2
27	.186,-2	-.118,-3	-.202,-2	.931,-3	.496,-3	.757,-3	.985,-3	-.607,-3	.418,-3	.125,-2
28	.948,-3	-.213,-3	-.147,-2	.233,-2	.655,-3	.224,-2	.575,-4	-.255,-3	-.825,-3	.679,-4
29	-.219,-3	-.103,-2	-.972,-3	.324,-2	.549,-3	.476,-3	-.145,-2	.476,-3	-.666,-3	-.968,-3
30	-.338,-3	-.184,-2	-.149,-2	.146,-2	.717,-5	-.339,-3	-.544,-4	.542,-3	-.582,-4	-.654,-3
31	.317,-3	-.139,-2	-.178,-2	-.105,-2	-.339,-3	-.416,-4	.238,-2	-.349,-3	.285,-4	-.435,-3
32	-.149,-3	-.128,-2	-.675,-3	-.974,-3	-.465,-3	-.725,-3	.212,-2	-.595,-3	.175,-3	-.787,-3
33	-.112,-2	-.959,-3	-.272,-3	-.199,-3	-.557,-3	-.125,-2	.101,-2	-.793,-3	-.208,-3	-.942,-3
34	-.149,-2	-.102,-2	-.403,-3	.141,-3	-.789,-4	-.146,-2	.172,-5	.149,-3	-.108,-2	.683,-4
35	-.150,-2	-.110,-2	.219,-3	-.247,-3	.283,-3	-.131,-2	-.565,-3	.607,-3	-.525,-3	.144,-2
36	-.109,-2	-.216,-3	.453,-3	-.237,-3	-.770,-4	-.623,-3	-.348,-3	-.250,-3	.376,-3	.152,-2
37	-.111,-3	-.742,-3	.114,-2	.726,-3	-.434,-3	-.304,-3	.395,-4	.524,-3	.922,-5	.509,-3
38	-.509,-3	-.216,-2	.130,-2	.151,-2	-.263,-3	-.895,-4	.960,-3	-.160,-2	.234,-3	-.488,-3
39	-.953,-3	-.186,-2	.301,-3	.717,-3	.105,-3	-.835,-3	.112,-2	.151,-3	.129,-3	-.147,-2
40	-.126,-2	-.100,-2	-.348,-3	.164,-3	-.309,-3	-.139,-2	.721,-3	-.215,-3	-.664,-3	-.108,-2
41	-.128,-2	-.166,-2	-.378,-3	-.289,-4	-.671,-4	-.115,-2	.766,-4	-.168,-3	-.311,-3	-.403,-3
42	-.679,-3	-.997,-3	.142,-3	-.307,-3	.120,-3	-.482,-3	.101,-2	-.204,-3	.241,-3	-.603,-3
43	-.580,-3	-.867,-4	-.671,-3	-.666,-3	.522,-3	-.146,-3	.122,-2	-.173,-3	-.155,-3	-.705,-3
44	-.955,-3	-.128,-3	-.243,-3	-.104,-2	.271,-3	.120,-3	.860,-3	-.198,-3	-.310,-3	-.286,-3
45	-.106,-2	-.505,-3	.551,-3	-.388,-3	.541,-3	-.371,-3	.148,-3	-.116,-3	-.434,-3	.141,-3
46	-.781,-3	-.947,-3	.614,-3	-.177,-3	.466,-3	-.260,-3	-.685,-3	.673,-4	-.469,-3	.120,-3
47	-.839,-3	-.104,-2	.531,-3	-.269,-3	.227,-3	.271,-3	-.922,-4	-.116,-3	.941,-4	-.115,-3
48	-.110,-2	-.650,-3	.333,-3	.237,-4	.565,-3	.123,-3	.627,-3	-.441,-3	.149,-3	.331,-3
49	-.107,-2	-.406,-3	.566,-3	.219,-3	-.230,-3	.444,-3	.997,-3	-.944,-3	.593,-4	.157,-4
50	-.952,-3	-.445,-3	.111,-2	.223,-3	-.696,-4	.435,-3	.522,-4	-.754,-3	-.201,-3	-.258,-3
51	-.660,-3	-.280,-3	.945,-3	.323,-3	.463,-3	-.918,-5	-.576,-3	.307,-3	-.457,-3	.115,-3
52	-.638,-3	.186,-4	.868,-3	-.133,-4	-.231,-3	.286,-3	-.396,-3	.495,-3	-.290,-3	-.137,-3
53	-.172,-2	-.381,-3	.580,-3	.142,-3	-.865,-3	.124,-2	-.266,-3	.366,-3	-.385,-3	-.431,-3
54	-.173,-2	-.788,-3	.452,-3	.715,-4	-.759,-3	.147,-2	-.505,-3	.412,-3	-.558,-3	-.853,-4
55	-.812,-3	-.569,-3	.465,-3	-.159,-3	-.134,-3	.714,-3	-.361,-3	.599,-3	-.445,-3	.192,-3
56	-.107,-2	-.973,-4	.196,-3	.161,-3	-.135,-3	-.458,-3	.383,-3	.873,-3	.139,-3	.215,-3
57	-.185,-2	-.518,-3	-.798,-4	.931,-3	-.501,-3	-.692,-3	.841,-3	.554,-3	.362,-3	-.435,-3
58	-.151,-2	-.524,-3	-.636,-3	.135,-2	-.372,-3	-.808,-3	.592,-3	.608,-3	.153,-3	-.550,-3
59	-.960,-3	-.414,-3	-.987,-4	.927,-3	-.185,-3	-.541,-3	.608,-3	.109,-2	-.119,-3	.997,-4
60	-.111,-2	-.555,-3	.497,-3	.535,-3	-.258,-4	-.154,-3	.404,-3	.111,-2	-.181,-3	.497,-3

Run No. 21 ; v component

Separation Distance (m.)

N	6	12	18	24	36	42	48	72	84	90
00	.546,-1	.562,-1	.528,-1	.598,-1	.571,-1	.539,-1	.695,-1	.633,-1	.609,-1	.568,-1
01	.377,-1	.377,-1	.357,-1	.360,-1	.356,-1	.335,-1	.408,-1	.361,-1	.34[illegible]1	.324,-1
02	.219,-1	.227,-1	.198,-1	.189,-1	.174,-1	.140,-1	.136,-1	.101,-1	.79[illegible]2	.735,-2
03	.156,-1	.163,-1	.129,-1	.137,-1	.108,-1	.639,-2	.585,-2	.237,-2	-.933,-3	-.169,-2
04	.139,-1	.127,-1	.101,-1	.122,-1	.752,-2	.370,-2	.602,-3	-.234,-2	-.439,-2	-.441,-2
05	.135,-1	.123,-1	.935,-2	.114,-1	.494,-2	.482,-3	-.139,-2	-.207,-2	-.113,-2	-.130,-2
06	.113,-1	.109,-1	.686,-2	.618,-2	.426,-3	-.321,-2	-.709,-3	-.109,-2	.942,-3	.137,-2
07	.862,-2	.937,-3	.431,-2	.396,-2	-.106,-2	-.467,-2	-.171,-2	-.201,-2	-.543,-3	.927,-3
08	.805,-2	.815,-2	.391,-2	.346,-2	-.173,-2	-.525,-2	-.229,-2	-.141,-2	-.127,-3	.121,-2
09	.643,-2	.531,-2	.241,-2	.124,-2	-.140,-2	-.408,-2	-.134,-2	-.833,-3	.645,-3	.115,-2
10	.707,-2	.460,-2	.147,-2	.658,-3	-.129,-2	-.376,-2	-.515,-3	-.157,-2	-.108,-2	.406,-3
11	.713,-2	.476,-2	.141,-2	.612,-4	-.257,-2	-.469,-2	.602,-3	-.234,-2	-.168,-2	.599,-3
12	.517,-2	.230,-2	-.51[illegible],-3	-.292,-2	-.310,-2	-.302,-2	.713,-3	-.169,-2	-.805,-3	.120,-3
13	.611,-2	.140,-2	-.189,-2	-.356,-2	-.273,-2	-.184,-2	.393,-3	-.158,-2	-.143,-3	-.287,-3
14	.373,-2	.978,-3	-.240,-2	-.254,-2	-.236,-2	-.129,-2	.554,-3	-.106,-2	-.293,-3	-.619,-4
15	.314,-2	-.732,-4	-.201,-2	-.154,-2	-.673,-3	-.217,-3	.511,-3	.932,-4	-.670,-3	.727,-3
16	.150,-2	-.507,-4	-.145,-2	-.154,-2	-.298,-3	.399,-3	.496,-3	.576,-3	.653,-4	.915,-3
17	.104,-2	.265,-3	-.122,-2	-.226,-2	-.638,-3	.567,-3	.160,-3	.101,-2	-.337,-3	.579,-4
18	.106,-2	.139,-3	-.120,-2	-.326,-2	-.939,-3	-.148,-3	.543,-3	.767,-3	-.121,-2	-.341,-3
19	.217,-2	-.910,-5	-.766,-3	-.312,-2	-.124,-2	-.187,-2	.108,-2	-.323,-3	-.899,-3	.412,-3
20	.241,-2	-.588,-3	-.130,-2	-.313,-2	-.165,-2	-.135,-2	.509,-3	-.110,-2	.183,-3	.922,-3
21	.199,-2	-.906,-3	-.118,-2	-.333,-2	-.134,-2	.214,-3	-.439,-3	-.124,-2	-.162,-4	.188,-3
22	.154,-2	-.773,-3	-.119,-2	-.153,-2	.171,-3	.128,-4	.211,-4	-.546,-3	-.838,-4	-.155,-5
23	.761,-3	-.851,-3	-.213,-2	-.103,-2	.154,-2	-.362,-3	.738,-4	.725,-3	-.641,-3	-.219,-4
24	.116,-2	-.295,-3	-.269,-2	-.136,-2	.475,-3	-.455,-3	-.418,-3	-.266,-3	.232,-3	.104,-2
25	.133,-2	-.330,-3	-.131,-2	-.306,-3	.442,-3	.364,-3	-.419,-3	-.117,-2	.120,-2	.221,-2
26	.270,-3	-.977,-3	-.136,-4	-.140,-3	.153,-3	.521,-3	-.543,-3	-.149,-2	.285,-3	.152,-2
27	-.408,-3	-.718,-3	-.195,-3	.387,-3	-.705,-3	-.301,-3	.503,-4	-.145,-2	-.457,-3	-.301,-3
28	-.155,-3	-.102,-3	-.486,-3	.559,-3	.783,-3	-.103,-2	.293,-3	.671,-4	-.373,-3	-.663,-3
29	-.152,-3	-.814,-3	-.239,-3	-.104,-2	.751,-3	-.579,-3	.953,-5	.163,-2	-.224,-3	.965,-4
30	.479,-4	-.148,-2	.296,-3	-.266,-3	-.908,-3	-.395,-3	-.148,-2	.115,-2	-.335,-4	.585,-3
31	.285,-3	-.119,-2	.137,-3	.1[illegible],-2	-.186,-2	-.212,-3	-.123,-2	.117,-3	-.913,-4	.472,-3
32	.339,-3	-.636,-3	.465,-3	.15[illegible],-2	-.945,-3	.102,-3	-.698,-4	.429,-3	-.689,-3	.109,-2
33	.161,-3	.253,-3	.747,-3	.119,-2	-.110,-3	.230,-3	.289,-3	.732,-3	-.668,-3	.327,-3
34	-.213,-3	.508,-4	.150,-3	.793,-3	.135,-3	-.656,-3	-.400,-3	.319,-3	-.130,-3	-.844,-3
35	-.415,-3	-.515,-3	-.363,-3	.100,-3	.178,-3	-.300,-3	-.849,-3	.235,-3	-.423,-3	-.536,-3
36	-.598,-3	-.890,-3	.174,-3	-.154,-3	-.218,-3	-.254,-3	-.298,-3	.674,-3	-.165,-2	.649,-4
37	-.115,-2	-.675,-3	-.678,-4	.373,-3	-.389,-3	.175,-3	-.306,-3	-.106,-3	-.105,-2	-.322,-4
38	-.808,-3	-.623,-3	-.833,-3	.121,-2	-.421,-3	.872,-3	.384,-4	-.668,-3	-.314,-3	-.725,-4
39	-.394,-3	-.993,-3	-.643,-3	.933,-3	-.550,-3	.907,-3	-.113,-3	-.821,-4	-.105,-2	.282,-3
40	-.380,-3	-.121,-2	.122,-3	-.806,-5	-.387,-3	-.364,-3	.244,-4	.121,-2	-.221,-2	.311,-3
41	-.897,-3	-.119,-2	.504,-3	-.247,-3	-.348,-3	-.686,-3	.485,-3	.144,-2	-.210,-2	.506,-3
42	-.156,-2	-.126,-2	.110,-2	-.343,-3	-.106,-3	-.742,-3	.526,-3	.682,-3	-.145,-2	.452,-3
43	-.200,-2	-.185,-3	.776,-3	-.806,-3	.169,-3	-.302,-3	.372,-3	-.163,-4	-.127,-2	.562,-3
44	-.213,-2	.202,-3	-.213,-3	-.136,-2	.875,-3	.173,-4	.940,-4	-.605,-3	-.144,-2	.950,-3
45	-.208,-2	-.530,-3	-.176,-3	-.356,-3	.478,-3	-.803,-5	.159,-3	-.961,-4	-.888,-3	.287,-3
46	-.137,-2	-.816,-3	.388,-3	.286,-3	-.309,-3	-.743,-4	.591,-3	.725,-3	.375,-3	-.354,-3
47	-.136,-2	-.903,-3	.138,-3	.113,-3	-.636,-3	-.734,-4	.534,-3	.540,-3	.194,-3	-.783,-4
48	-.995,-3	-.589,-3	-.515,-3	.398,-3	.536,-3	.194,-3	.246,-3	-.197,-3	-.245,-3	.260,-3
49	-.219,-3	-.667,-3	-.345,-3	.356,-3	-.616,-3	.567,-3	.527,-3	-.332,-3	-.283,-3	.328,-3
50	-.554,-3	-.940,-3	-.351,-3	.172,-3	-.559,-3	.756,-3	.495,-3	-.312,-3	-.538,-3	.112,-3
51	-.118,-2	-.441,-3	-.179,-3	.284,-3	-.354,-3	.758,-3	.570,-4	-.435,-3	-.102,-2	.269,-3
52	-.142,-2	-.246,-3	.606,-3	.123,-3	-.378,-3	.410,-3	-.128,-3	-.684,-4	-.771,-3	.612,-3
53	-.189,-2	-.232,-3	.347,-3	-.847,-4	.446,-4	.656,-3	-.749,-3	.907,-4	-.637,-4	.233,-3
54	-.204,-2	-.118,-3	.256,-4	-.188,-3	.112,-3	.124,-2	-.614,-3	.668,-3	-.107,-3	.235,-3
55	-.136,-2	-.292,-4	.855,-3	.368,-3	-.991,-3	.116,-2	.490,-4	.385,-3	-.102,-3	.652,-3
56	-.137,-2	-.251,-3	.685,-3	.921,-5	-.826,-3	.572,-3	-.190,-4	.254,-3	.617,-3	.146,-3
57	-.140,-2	-.306,-3	-.858,-4	-.851,-3	-.276,-4	.445,-4	.196,-3	.351,-3	.959,-3	-.428,-3
58	-.172,-2	-.540,-3	.114,-3	-.212,-3	.145,-4	.148,-3	.150,-3	-.142,-3	.223,-3	-.326,-4
59	-.195,-2	.216,-3	-.605,-4	.418,-3	.552,-3	-.307,-3	.313,-3	-.110,-3	.335,-3	-.446,-3
60	-.153,-2	.702,-3	-.404,-3	.538,-3	.862,-3	-.680,-3	.682,-3	-.196,-5	.617,-3	-.929,-3

Run No. 21 ; w component

	Separation Distance (m.)									
N	6	12	18	24	36	42	48	72	84	90
00	.231,-2	.245,-2	.131,-2	.456,-3	-.315,-3	.596,-3	-.346,-3	.303,-4	.365,-3	-.123,-3
01	.237,-2	.249,-2	.146,-2	.278,-3	-.105,-3	.102,-2	-.444,-3	-.231,-3	.374,-3	-.186,-4
02	.214,-2	.180,-2	.158,-2	.523,-3	.185,-3	.705,-3	-.274,-3	.165,-3	.732,-3	.281,-3
03	.134,-2	.112,-2	.463,-3	.723,-3	.863,-3	-.496,-3	.195,-3	.881,-3	.900,-3	.127,-3
04	.826,-3	.986,-3	.521,-4	-.288,-4	.305,-3	-.755,-3	.130,-3	.109,-2	.130,-2	.360,-3
05	.105,-2	.538,-3	.223,-3	-.187,-3	-.584,-3	-.520,-3	.294,-4	-.192,-3	.123,-2	-.825,-4
06	.214,-2	.270,-3	.106,-3	.162,-3	-.497,-3	-.824,-3	.139,-4	-.118,-2	.210,-4	-.113,-2
07	.201,-2	.211,-3	.721,-3	.253,-3	-.746,-3	-.101,-2	.266,-3	-.371,-3	-.559,-3	.710,-3
08	.145,-2	.301,-3	.757,-3	.445,-3	-.791,-3	-.574,-3	.600,-3	-.196,-4	-.712,-3	-.124,-3
09	.136,-2	.129,-3	.859,-3	.564,-3	-.579,-3	.169,-3	.517,-3	-.106,-3	-.835,-3	-.362,-3
10	.737,-3	-.655,-3	.458,-3	.383,-3	-.142,-3	.603,-3	.229,-3	-.182,-3	-.854,-3	-.592,-3
11	.519,-3	-.699,-3	.748,-4	.341,-3	-.152,-3	-.240,-4	.140,-3	-.800,-3	.247,-3	-.197,-3
12	.135,-2	-.460,-3	-.523,-3	.150,-3	.380,-3	-.136,-3	.110,-3	-.122,-2	.643,-3	.368,-3
13	.153,-2	.138,-3	-.551,-3	.768,-4	.101,-2	.514,-3	-.260,-3	-.633,-3	-.920,-4	.454,-3
14	.788,-3	.927,-3	-.172,-3	.662,-3	.727,-3	.293,-3	-.732,-3	-.734,-3	-.309,-3	.509,-3
15	.317,-3	.147,-2	.463,-4	.830,-3	.477,-3	-.474,-3	-.616,-3	-.421,-3	.376,-3	.627,-3
16	.567,-3	.139,-2	-.144,-3	.451,-3	.669,-3	-.482,-3	-.592,-3	.374,-3	.516,-3	.263,-3
17	.107,-2	-.381,-4	-.357,-3	.415,-3	.224,-3	-.143,-3	-.633,-3	.724,-3	.112,-3	.217,-3
18	.136,-2	-.367,-3	-.202,-3	-.252,-3	-.472,-3	.538,-3	-.402,-3	.912,-4	-.154,-3	.442,-4
19	.378,-3	-.253,-3	.958,-3	-.268,-3	-.297,-3	.736,-3	-.834,-4	-.751,-4	-.154,-3	-.698,-3
20	.108,-3	-.530,-3	.928,-3	.464,-3	.414,-3	.185,-3	-.188,-4	.247,-3	-.246,-3	-.146,-2
21	.625,-3	-.481,-3	.108,-3	.864,-3	-.308,-3	-.153,-3	.482,-4	.113,-3	-.524,-3	-.127,-2
22	.474,-3	-.288,-3	.102,-3	.442,-3	-.811,-3	-.170,-3	.173,-3	.227,-3	-.237,-3	-.116,-2
23	-.325,-3	-.259,-3	-.210,-3	.645,-5	-.773,-3	.149,-3	.101,-3	.105,-2	-.816,-4	-.788,-3
24	-.734,-3	-.125,-3	-.125,-3	-.144,-3	-.415,-3	.502,-3	-.173,-3	.790,-3	.110,-3	.144,-3
25	.870,-3	.318,-3	.601,-3	-.193,-3	.183,-3	.662,-3	.643,-3	.197,-3	.304,-3	.721,-3
26	.147,-2	.802,-3	.197,-3	-.826,-4	.621,-3	.658,-3	.626,-3	-.302,-3	.105,-3	.202,-3
27	.163,-3	.418,-3	-.531,-3	-.204,-3	.159,-3	.589,-3	.189,-3	-.374,-3	.276,-3	-.133,-3
28	-.567,-3	-.541,-3	-.263,-4	.344,-3	-.218,-3	.308,-3	.589,-4	.303,-4	.258,-3	.563,-4
29	-.105,-2	-.137,-2	.101,-2	.418,-3	-.373,-3	.429,-3	-.176,-4	.369,-3	- 380,-3	-.285,-3
30	-.102,-2	-.838,-3	.128,-2	-.141,-3	-.433,-3	.403,-4	-.774,-4	.316,-3	-.478,-3	-.161,-3
31	.942,-4	-.839,-5	.404,-4	-.551,-3	-.143,-3	-.234,-3	-.386,-3	.158,-3	-.303,-3	-.123,-3
32	.428,-3	-.168,-3	-.571,-3	-.283,-3	.216,-3	.904,-4	-.491,-3	-.843,-4	-.654,-3	.916,-4
33	-.341,-3	-.789,-4	-.141,-3	.161,-3	.521,-4	.247,-3	-.152,-3	.143,-3	-.156,-2	.559,-3
34	-.143,-3	-.359,-4	.127,-4	.502,-3	-.167,-3	.177,-3	.218,-3	.260,-3	-.170,-2	.136,-3
35	-.247,-3	.390,-3	-.715,-3	.551,-3	-.146,-3	-.234,-3	.257,-3	.122,-3	-.124,-2	-.442,-3
36	-.533,-3	.502,-3	-.865,-3	.421,-3	-.161,-3	.126,-3	.113,-3	.464,-3	-.422,-3	-.356,-3
37	-.460,-3	.307,-3	-.563,-3	.353,-4	-.427,-3	.285,-3	-.535,-3	.935,-3	.260,-3	-.895,-3
38	-.451,-3	.138,-4	-.278,-3	.242,-3	-.761,-3	-.492,-4	-.445,-3	.612,-3	.673,-3	-.141,-2
39	-.489,-3	-.460,-3	.529,-4	.210,-3	-.773,-3	-.557,-4	-.322,-3	-.854,-4	.482,-3	-.823,-3
40	-.110,-2	-.139,-2	.154,-2	-.518,-3	-.334,-3	-.145,-3	-.424,-3	.833,-4	-.726,-4	-.681,-4
41	-.770,-3	-.130,-2	.163,-2	-.640,-3	.681,-4	-.262,-3	-.503,-4	-.274,-3	-.178,-3	.105,-3
42	-.572,-3	-.119,-2	.312,-3	-.462,-3	.540,-3	.696,-4	.158,-3	-.136,-3	-.111,-3	.266,-3
43	-.107,-2	-.104,-2	-.173,-4	-.174,-3	.510,-3	.996,-4	.143,-3	-.474,-4	-.419,-3	.336,-3
44	-.631,-3	-.429,-3	.338,-3	.376,-3	-.115,-3	.286,-3	.139,-3	.125,-3	-.389,-3	.218,-3
45	.347,-3	-.174,-3	.330,-3	.155,-3	.359,-4	.255,-3	-.245,-4	.417,-3	-.430,-3	-.136,-3
46	.144,-3	-.502,-3	-.472,-3	-.309,-3	.247,-3	-.103,-3	-.262,-3	.577,-3	-.566,-3	-.742,-3
47	-.159,-3	-.483,-3	-.824,-3	-.198,-3	.334,-3	-.462,-4	-.221,-3	.416,-3	-.807,-3	-.312,-3
48	-.257,-3	.413,-3	-.441,-3	-.213,-3	.851,-5	.664,-3	-.255,-3	.766,-4	-.290,-3	.223,-3
49	-.223,-3	.314,-3	-.131,-3	.123,-3	-.495,-3	.800,-3	-.340,-3	.291,-3	.327,-3	-.171,-3
50	-.601,-3	.127,-3	.483,-3	.242,-3	-.466,-3	.584,-3	-.428,-3	.681,-3	.400,-3	-.281,-3
51	-.114,-2	.430,-3	.115,-2	-.241,-3	-.319,-3	-.276,-4	-.199,-3	.428,-3	.255,-4	.335,-3
52	-.893,-3	.125,-2	.844,-3	-.142,-3	-.532,-3	-.475,-3	.123,-3	.747,-4	-.435,-3	.381,-3
53	-.122,-3	.918,-3	.376,-4	.522,-4	-.323,-3	-.401,-3	.172,-4	.576,-3	.250,-3	-.851,-4
54	.429,-3	-.379,-4	-.125,-2	-.188,-3	.678,-4	.183,-3	-.432,-3	.420,-3	.123,-2	.297,-3
55	-.134,-3	-.712,-3	-.109,-2	-.628,-3	.397,-3	.301,-3	-.902,-3	.247,-3	.862,-3	-.241,-3
56	-.109,-2	-.148,-2	-.914,-4	-.159,-3	.527,-3	-.309,-3	-.415,-3	.234,-3	-.136,-3	-.784,-4
57	-.874,-3	-.121,-2	.574,-3	-.128,-5	.468,-3	-.151,-3	.181,-3	.127,-3	-.491,-3	.521,-3
58	-.457,-3	-.263,-3	.622,-3	.272,-3	.779,-3	.197,-3	.198,-3	.247,-4	.766,-3	.408,-3
59	-.602,-3	-.660,-3	-.163,-3	.534,-3	.330,-3	.688,-3	.496,-4	-.210,-3	.182,-2	-.167,-3
60	-.994,-3	-.122,-2	-.448,-3	.431,-3	-.162,-3	.763,-3	-.468,-4	-.280,-3	.152,-2	-.339,-3

Run No. 23 ; u component

	Separation Distance (in.)									
N	6	12	18	24	36	42	48	72	84	90
00	.197	.131	.946,-1	.475,-1	.108	.110	.798,-1	.362,-1	.539,-1	.228,-1
01	.167	.104	.842,-1	.369,-1	.630,-1	.680,-1	.746,-1	-.171,-2	.172,-1	-.364,-3
02	.815,-1	.429,-1	.420,-1	.339,-2	-.308,-2	.689,-4	.538,-1	-.237,-1	-.111,-1	-.129,-1
03	.382,-1	.207,-1	.262,-1	-.256,-1	-.156,-1	-.751,-2	.657,-1	-.268,-1	-.516,-2	-.615,-2
04	.249,-1	.134,-1	.139,-1	-.140,-1	-.551,-2	.563,-2	-.792,-3	-.178,-1	-.409,-2	-.509,-2
05	.134,-1	.410,-3	-.441,-2	-.640,-2	-.502,-2	.410,-2	-.173,-1	.425,-2	.211,-2	-.255,-2
06	.916,-3	-.407,-2	-.437,-3	-.528,-2	-.696,-2	.612,-2	-.190,-1	.124,-1	.197,-2	-.523,-2
07	-.178,-2	-.657,-2	-.[illegible],-2	.712,-2	.217,-2	.878,-2	-.134,-1	.309,-2	-.506,-2	.648,-3
08	.429,-2	-.753,-2	-.519,-3	.838,-2	.652,-2	.905,-2	-.508,-2	-.583,-2	.327,-3	.102,-1
09	.532,-2	-.319,-2	-.114,-2	.477,-2	.399,-2	.855,-3	.365,-2	-.498,-2	.413,-2	.704,-2
10	.143,-2	.156,-2	.242,-2	.141,-2	-.689,-3	.401,-2	.331,-2	-.193,-2	.134,-2	.602,-2
11	-.314,-2	-.328,-3	.177,-2	-.360,-2	.251,-2	.311,-2	.300,-2	-.205,-2	-.925,-3	.546,-2
12	-.386,-2	-.140,-2	-.286,-2	-.363,-2	.796,-2	-.315,-2	.998,-3	-.369,-2	-.966,-3	-.104,-2
13	-.972,-3	.107,-2	-.116,-2	.157,-2	.479,-2	-.437,-2	-.227,-2	-.224,-2	-.317,-2	-.310,-2
14	.101,-3	.213,-2	.265,-2	.293,-2	-.867,-3	-.194,-2	-.577,-2	-.230,-2	-.791,-2	.596,-3
15	-.101,-3	.177,-2	.206,-2	.174,-2	-.164,-2	-.190,-2	-.977,-2	-.999,-3	-.810,-2	.255,-2
16	.139,-2	.157,-2	.194,-2	-.155,-4	-.257,-2	-.334,-2	-.174,-2	-.766,-3	-.156,-2	.200,-2
17	.231,-2	.216,-2	.235,-2	.923,-3	.307,-3	-.103,-2	.564,-2	-.562,-3	.130,-2	.224,-2
18	.621,-3	.878,-3	.241,-2	.205,-2	.395,-3	-.260,-3	.446,-2	.239,-2	.784,-3	-.220,-3
19	-.231,-2	-.183,-2	.106,-2	.119,-2	-.105,-2	-.233,-2	.458,-2	.176,-2	.321,-2	-.356,-2
20	-.168,-2	-.124,-2	.532,-3	-.152,-2	.219,-3	-.149,-2	.187,-2	.153,-5	.512,-3	-.338,-2
21	.224,-3	-.216,-3	-.842,-3	-.438,-3	.209,-2	-.619,-4	-.606,-3	.482,-3	-.275,-2	-.844,-3
22	-.606,-3	-.177,-2	-.295,-3	.995,-3	.172,-2	.979,-3	.262,-3	.415,-3	-.148,-2	.762,-3
23	-.285,-3	-.125,-2	.813,-3	.809,-3	.282,-2	.779,-3	.533,-3	.130,-3	-.469,-3	-.397,-3
24	.115,-2	-.265,-3	-.473,-3	.822,-4	.303,-2	.182,-2	.129,-2	.283,-3	.861,-3	-.333,-3
25	.168,-2	.103,-2	-.103,-2	-.206,-2	.159,-2	.293,-2	.832,-3	.117,-2	.212,-2	.140,-2
26	.173,-2	.859,-3	-.198,-3	-.241,-2	-.146,-3	.172,-2	-.112,-2	.135,-2	.216,-2	.260,-2
27	.104,-2	.202,-3	-.680,-4	-.219,-2	.963,-3	-.140,-3	-.168,-2	.936,-3	.186,-2	.295,-2
28	.378,-3	.335,-3	.371,-3	.299,-4	.138,-2	-.521,-4	-.543,-3	-.281,-3	.174,-2	.918,-3
29	-.179,-3	.169,-3	.112,-2	.137,-2	.696,-3	.656,-3	-.701,-3	-.219,-2	.175,-2	-.343,-3
30	-.607,-3	-.354,-3	.113,-2	.531,-3	.816,-3	.585,-3	-.139,-2	-.223,-2	.179,-2	.731,-3
31	-.593,-3	.102,-3	.498,-3	.643,-3	.636,-3	.100,-2	.237,-3	-.163,-2	.472,-3	.217,-2
32	-.729,-3	.100,-3	.195,-3	.134,-4	-.794,-3	.353,-4	.150,-2	-.735,-3	.102,-2	.188,-2
33	-.114,-2	-.269,-3	.138,-3	.882,-3	-.144,-2	-.140,-2	.963,-3	-.864,-3	.169,-2	.521,-3
34	-.478,-3	.127,-2	.100,-2	.213,-2	-.341,-3	-.170,-2	.267,-3	-.190,-2	-.414,-3	-.228,-3
35	.101,-2	.119,-2	.104,-2	.123,-3	-.928,-3	.399,-3	.297,-3	-.151,-2	-.131,-2	-.727,-4
36	.462,-3	-.184,-3	.320,-3	-.985,-3	-.613,-3	.218,-3	.581,-3	.330,-3	-.231,-3	-.353,-3
37	-.373,-3	-.527,-3	.783,-3	-.846,-3	-.126,-5	-.936,-3	.404,-3	.187,-3	.142,-2	.148,-3
38	.439,-3	-.306,-3	.777,-3	.916,-4	-.386,-3	-.867,-3	-.935,-5	.641,-3	.197,-2	.711,-3
39	.107,-2	.998,-3	.104,-3	.107,-2	.217,-3	.692,-3	.552,-3	.805,-3	.112,-2	.489,-3
40	.761,-3	.110,-2	-.709,-4	.121,-2	-.430,-4	.121,-2	.585,-3	.796,-3	.112,-2	.290,-3
41	.702,-3	.909,-3	.567,-3	.949,-3	-.511,-3	.636,-3	.560,-3	.771,-3	.941,-3	.108,-2
42	.507,-3	.820,-3	.128,-2	.150,-2	.406,-4	.442,-3	.167,-2	.350,-3	.264,-3	.169,-2
43	.114,-3	.174,-3	.849,-3	.155,-2	-.454,-3	.506,-3	.957,-3	-.639,-3	.467,-3	.465,-3
44	.158,-3	-.239,-3	.882,-3	.523,-3	-.415,-3	-.177,-3	-.150,-3	-.606,-3	.421,-3	.335,-3
45	.428,-4	-.938,-3	.782,-3	.704,-3	-.135,-3	-.166,-3	.355,-3	.259,-4	-.567,-3	.538,-3
46	.628,-4	-.686,-3	.331,-3	.833,-3	-.104,-2	-.392,-3	.107,-2	-.193,-3	-.908,-3	.240,-3
47	.664,-3	-.370,-3	.436,-3	-.819,-4	-.639,-3	-.992,-3	.379,-3	.140,-3	-.182,-3	.347,-3
48	.413,-3	.463,-3	.368,-3	.750,-3	-.113,-3	-.102,-2	.810,-4	.394,-3	-.854,-5	.377,-3
49	-.452,-3	.449,-3	-.162,-4	.102,-2	.174,-3	-.102,-3	-.190,-5	.940,-4	-.532,-3	.236,-3
50	.441,-3	.234,-3	.201,-4	-.970,-4	.928,-4	.118,-2	.332,-3	-.886,-3	-.543,-4	.505,-3
51	.117,-2	-.119,-3	.220,-3	.172,-4	.224,-3	.930,-3	.126,-3	-.351,-3	.842,-3	.670,-3
52	.116,-2	-.473,-3	-.205,-3	.495,-3	-.484,-3	.394,-3	-.745,-5	.395,-4	-.159,-3	.296,-4
53	.844,-3	-.104,-2	-.660,-3	.119,-3	-.453,-3	.383,-3	.465,-4	-.107,-2	-.262,-3	-.125,-3
54	.754,-3	-.925,-3	-.471,-4	-.206,-3	.293,-3	.173,-4	-.156,-3	-.114,-2	.185,-4	-.192,-4
55	.967,-4	-.188,-3	.720,-4	-.213,-3	-.247,-3	.150,-3	.334,-3	-.488,-3	.174,-3	.349,-3
56	-.[illegible],-3	.738,-4	-.124,-4	-.105,-2	-.195,-3	-.465,-3	-.681,-3	-.813,-3	.153,-3	-.761,-4
57	-.1[illegible],-3	-.337,-3	-.911,-4	-.455,-3	.205,-3	-.301,-3	-.173,-2	-.511,-3	-.742,-3	-.494,-3
58	.108,-3	-.649,-3	-.276,-3	.877,-4	-.220,-3	.483,-3	-.637,-3	.901,-4	-.136,-2	-.294,-3
59	-.334,-3	-.205,-3	.146,-4	.215,-3	-.702,-4	.669,-3	.190,-3	-.632,-3	-.117,-2	.867,-3
60	-.370,-3	.552,-5	.198,-3	.240,-3	.255,-3	.362,-3	.240,-3	-.124,-2	-.726,-3	.826,-3

Run No. 23 ; v component

	Separation Distance (m.)									
N	6	12	18	24	36	42	48	72	84	90
00	.277,-1	.253,-1	.218,-1	.323,-1	.299,-1	.251,-1	.134,-1	.858,-2	.111,-1	.866,-2
01	.287,-1	.210,-1	.189,-1	.211,-1	.218,-1	.180,-1	.647,-2	.181,-2	.379,-2	.171,-2
02	.327,-1	.174,-1	.205,-1	.976,-2	.102,-1	.117,-1	.288,-2	-.231,-2	-.240,-2	-.323,-2
03	.266,-1	.121,-1	.150,-1	.670,-2	.489,-2	.407,-2	.474,-2	-.193,-2	-.507,-3	.113, 2
04	.166,-1	.897,-2	.859,-2	.440,-2	.297,-2	.175,-2	.345,-2	-.405,-2	-.313,-2	.230,-2
05	.102,-1	.482,-2	.311,-2	.263,-2	-.287,-2	.172,-2	-.590,-3	-.203,-2	-.500,-3	.474,-2
06	.689,-2	.335,-2	-.855,-3	.216,-2	-.453,-2	.575,-3	-.483,-2	-.249,-2	.191,-2	.347,-2
07	.724,-2	.359,-2	-.210,-2	.361,-3	-.198,-2	.115,-2	-.211,-2	-.356,-2	.906,-3	.268,-2
08	.692,-2	.214,-2	-.371,-2	-.421,-2	-.374,-2	.142,-2	.209,-2	-.349,-2	.630,-4	.178,-2
09	.533,-2	.164,-2	-.123,-2	-.348,-2	-.310,-2	.302,-3	.583,-3	-.377,-2	-.677,-3	-.117,-2
10	.526,-2	.848,-3	.862,-3	.504,-3	-.553,-3	.422,-3	-.216,-2	-.228,-2	-.194,-2	-.278,-2
11	.510,-2	.548,-3	-.974,-4	.264,-2	-.142,-4	.163,-2	-.168,-2	-.141,-3	-.136,-2	-.140,-2
12	.494,-2	-.297,-3	-.593,-3	.650,-3	.708,-3	.109,-2	.154,-2	-.141,-2	.231,-2	.185,-2
13	.452,-2	-.277,-3	.241,-4	-.193,-2	-.119,-2	.619,-3	.337,-2	-.114,-2	.334,-2	.227,-2
14	.336,-2	-.731,-3	-.672,-3	-.178,-2	-.111,-2	-.642,-3	.177,-2	.580,-3	.135,-3	.136,-2
15	-.260,-3	-.110,-2	-.174,-2	.364,-3	.617,-3	-.121,-2	.213,-2	.107,-2	-.109,-3	.259,-3
16	-.558,-3	-.875,-3	-.112,-2	.668,-3	.561,-3	-.294,-2	.111,-2	.134,-2	-.575,-3	-.892,-3
17	.157,-2	-.122,-2	-.466,-3	.404,-3	-.330,-3	-.419,-2	.639,-3	.629,-3	-.110,-2	-.303,-3
18	.205,-2	-.134,-2	-.572,-3	-.117,-4	-.107,-2	-.402,-2	.292,-3	-.410,-3	-.206,-3	.105,-2
19	.166,-2	-.950,-3	.144,-3	.319,-3	-.827,-3	-.145,-2	-.188,-3	-.423,-3	-.390,-3	.131,-2
20	.859,-3	-.622,-3	.615,-3	.424,-3	-.567,-3	-.564,-3	-.152,-2	.236,-3	-.102,-2	.126,-3
21	.590,-3	-.936,-4	-.110,-3	.775,-3	-.486,-3	-.896,-3	-.472,-3	-.440,-3	-.443,-3	.263,-4
22	.501,-3	.239,-3	-.809,-3	.101,-2	.954,-3	-.137,-4	.853,-3	-.534,-3	-.125,-2	-.224,-3
23	.387,-3	.231,-3	-.560,-3	.307,-3	.111,-2	-.456,-4	.115,-2	.663,-3	-.147,-2	-.106,-2
24	.125,-2	.955,-3	.512,-3	-.472,-3	-.606,-3	.225,-3	.152,-2	.319,-4	-.968,-3	-.130,-2
25	.171,-2	.118,-2	.126,-2	.906,-4	-.123,-2	.499,-3	.136,-2	-.251,-2	-.169,-2	-.167,-2
26	.907,-3	.927,-3	.913,-3	.205,-2	-.216,-2	.776,-3	.151,-3	-.197,-2	-.123,-2	-.535,-3
27	.714,-3	.100,-2	.767,-3	.209,-2	-.208,-2	.458,-3	-.521,-3	-.614,-3	-.105,-3	-.361,-3
28	.840,-3	.447,-3	.659,-3	-.283,-4	-.171,-2	-.201,-3	.576,-3	-.154,-3	-.293,-3	-.135,-2
29	.113,-2	-.454,-3	-.362,-4	-.614,-3	-.158,-2	-.475,-3	.157,-2	-.487,-4	-.728,-3	-.148,-2
30	.123,-2	.459,-3	-.440,-4	-.241,-3	-.655,-3	.117,-2	.951,-3	-.368,-3	-.320,-3	.291,-3
31	.124,-2	.186,-2	.238,-3	.611,-3	-.339,-3	.731,-3	.170,-3	-.663,-3	.194,-3	.380,-3
32	.235,-3	.942,-3	-.948,-4	.140,-2	-.288,-3	-.127,-3	-.632,-3	-.716,-3	-.379,-3	-.651,-3
33	-.535,-3	.386,-4	-.317,-4	.152,-2	-.343,-3	.972,-4	-.116,-2	.358,-3	.742,-3	-.281,-3
34	.207,-3	.752,-3	.147,-3	.140,-2	-.424,-4	.663,-3	-.809,-3	.847,-3	.118,-2	-.292,-3
35	.235,-2	.781,-3	.247,-3	.160,-2	-.450,-4	.801,-3	-.959,-3	-.170,-3	-.138,-3	-.296,-3
36	.251,-2	-.217,-4	.684,-3	.111,-2	-.623,-4	.564,-3	-.108,-2	-.105,-3	.475,-3	-.118,-3
37	.156,-2	.740,-3	.900,-3	.359,-3	.776,-3	.710,-3	-.992,-3	.171,-3	.296,-3	.329,-3
38	-.956,-4	.942,-3	-.269,-3	-.130,-3	.492,-3	.912,-3	-.707,-3	-.110,-2	-.477,-3	.111,-2
39	-.718,-3	.278,-3	-.653,-3	.283,-3	-.342,-3	-.699,-3	.748,-3	-.149,-2	.696,-4	.564,-3
40	.357,-3	.374,-4	.585,-3	.913,-3	.192,-3	-.146,-2	.201,-2	-.745,-3	.679,-3	-.220,-3
41	.111,-2	.136,-3	.102,-2	.303,-3	.158,-2	-.515,-3	.163,-2	-.120,-2	.136,-3	.333,-3
42	.657,-3	.761,-3	.221,-3	-.532,-3	.937,-3	.411,-4	-.473,-3	-.878,-3	.151,-2	.783,-3
43	.960,-3	.137,-2	.793,-4	-.898,-3	-.137,-2	.202,-3	-.121,-2	.130,-3	.105,-2	.444,-3
44	.958,-3	.209,-3	.335,-3	-.208,-3	-.858,-3	.348,-4	-.528,-4	.141,-3	.188,-3	.302,-3
45	-.296,-3	-.106,-3	.875,-3	-.195,-3	.556,-3	.288,-3	.525,-3	-.337,-3	-.353,-3	-.171,-3
46	-.971,-3	-.661,-3	.106,-2	-.109,-2	.338,-3	.848,-3	.165,-3	-.550,-3	-.131,-3	-.120,-3
47	-.259,-3	-.123,-2	-.156,-3	-.475,-3	.818,-4	.179,-3	-.965,-3	-.548,-4	-.849,-3	-.676,-3
48	.346,-3	-.121,-2	-.897,-3	.440,-3	.311,-3	-.179,-2	-.470,-3	.229,-3	-.136,-2	-.356,-3
49	-.170,-3	-.355,-4	-.663,-3	.422,-3	.932,-3	-.912,-3	.293,-3	-.154,-3	-.160,-2	.106,-2
50	.140,-3	.287,-3	-.692,-3	-.354,-4	.109,-2	.382,-3	.789,-3	.624,-3	-.118,-2	.393,-4
51	.705,-3	-.380,-3	-.211,-3	-.878,-4	.883,-3	.658,-3	.504,-3	.890,-3	-.995,-4	-.111,-2
52	.618,-4	-.822,-3	.388,-3	.163,-3	.648,-3	.589,-3	.552,-3	-.318,-3	.531,-3	-.325,-3
53	-.135,-2	-.107,-2	.240,-3	-.667,-3	.166,-2	.361,-3	.438,-3	-.148,-3	.367,-4	-.310,-3
54	-.144,-2	-.596,-3	.305,-4	-.237,-3	.131,-2	.373,-3	-.748,-3	.833,-4	-.119,-2	.557,-3
55	-.639,-3	.167,-3	-.262,-3	.405,-3	.175,-3	.176,-3	-.118,-2	.359,-3	-.942,-3	.706,-3
56	-.307,-3	.752,-3	-.981,-3	-.210,-3	-.221,-3	-.523,-3	-.982,-3	.379,-3	.258,-3	.466,-3
57	.139,-3	.661,-3	-.100,-2	-.332,-3	-.372,-3	-.640,-3	-.387,-3	-.359,-3	.347,-3	.402,-3
58	.450,-3	.697,-3	-.000,-4	.251,-3	-.503,-3	.561,-4	.409,-3	-.191,-3	.547,-3	.226,-3
59	-.983,-4	.763,-3	.554,-3	.533,-3	.143,-3	-.261,-3	.434,-3	.705,-3	-.276,-4	-.340,-3
60	-.486,-3	.572,-3	.125,-3	.775,-3	.360,-3	-.724,-3	.518,-3	.105,-2	-.194,-3	-.512,-3

Run No. 24 ; u component

	Separation Distance (m.)									
N	6	12	18	24	36	42	48	72	84	90
00	.554,-1	.716,-1	.286,-1	.146	.646,-1	.757,-2	.397,-1	-.107,-2	-.709,-2	-.119,-1
01	.919,-1	.731,-1	.282,-1	.129	.624,-1	.214,-1	.219,-1	-.248,-2	-.955,-2	-.113,-1
02	.122	.536,-1	.228,-1	.777,-2	.102,-1	.282,-1	-.523,-3	.465,-2	-.234,-1	-.268,-1
03	.739,-1	.264,-1	.111,-1	-.520,-1	-.204,-1	.824,-2	.117,-2	.132,-1	-.204,-1	-.339,-1
04	.213,-1	.349,-3	.172,-2	-.191,-1	.222,-2	.414,-2	-.134,-2	.637,-3	-.747,-2	-.224,-2
05	.139,-1	.311,-2	.966,-2	-.968,-3	.548,-2	.313,-2	.993,-2	-.822,-2	-.134,-1	.670,-2
06	.939,-2	.209,-2	.187,-1	-.221,-2	-.303,-2	-.788,-2	.130,-1	-.319,-2	-.150,-1	-.280,-2
07	.453,-2	-.239,-2	.211,-2	-.232,-2	-.957,-2	-.255,-2	-.972,-3	.313,-2	-.609,-2	.439,-2
08	.373,-2	-.712,-3	-.932,-2	-.905,-3	-.938,-2	.203,-2	-.781,-2	.158,-2	-.174,-2	-.628,-3
09	.123,-2	.248,-2	-.459,-2	.553,-2	-.615,-2	.201,-2	.663,-3	-.281,-2	-.671,-2	-.712,-2
10	.319,-2	.721,-3	-.308,-2	.433,-2	-.337,-3	.220,-2	.557,-2	-.313,-3	-.478,-2	-.560,-2
11	.303,-2	-.249,-2	-.226,-2	.144,-2	.334,-2	.209,-2	.397,-2	-.365,-2	.876,-3	-.278,-2
12	.876,-3	-.505,-3	-.169,-2	.431,-2	.822,-3	-.151,-2	-.283,-2	-.393,-2	.136,-2	-.488,-3
13	.164,-2	-.117,-2	-.279,-2	.406,-2	-.699,-3	-.281,-2	.759,-3	.893,-3	-.280,-3	-.329,-2
14	.114,-2	-.128,-2	-.313,-2	.141,-2	-.702,-3	-.153,-2	-.423,-4	.429,-3	.933,-3	-.681,-2
15	.173,-2	-.349,-3	-.235,-2	-.274,-3	.180,-2	-.477,-3	-.461,-2	-.850,-3	-.334,-3	-.479,-2
16	.266,-2	-.256,-2	-.389,-2	-.104,-2	.188,-2	.190,-2	-.388,-3	-.662,-3	-.341,-2	-.217,-2
17	.121,-2	-.377,-2	-.619,-2	-.215,-2	.547,-3	.103,-2	.593,-2	-.264,-2	-.221,-2	.150,-2
18	-.192,-2	-.245,-2	-.427,-2	-.101,-2	-.130,-2	-.339,-3	.243,-2	-.793,-3	.400,-2	.834,-3
19	-.627,-3	-.761,-3	-.204,-2	.562,-3	-.262,-3	-.965,-3	-.566,-3	-.758,-3	.501,-2	-.118,-2
20	.235,-3	.409,-4	-.132,-2	-.241,-3	.166,-2	.111,-2	-.147,-2	.923,-3	.503,-3	-.346,-2
21	-.493,-3	.961,-3	-.147,-2	-.132,-2	.920,-3	.227,-2	-.155,-3	.569,-3	.575,-3	-.268,-2
22	-.291,-2	.711,-3	-.271,-2	-.396,-3	-.509,-3	.866,-3	.299,-2	-.949,-3	-.203,-3	.328,-3
23	-.271,-2	.202,-3	-.248,-2	.131,-2	-.445,-3	.765,-3	.196,-2	-.839,-3	-.179,-2	.443,-3
24	-.539,-3	-.278,-3	-.676,-3	-.235,-3	.634,-3	-.223,-2	.197,-3	.243,-3	-.171,-2	-.157,-2
25	-.151,-3	-.183,-3	-.140,-3	-.174,-3	.584,-3	-.284,-2	.459,-3	.450,-3	-.631,-3	-.199,-2
26	.717,-3	.318,-3	-.309,-3	.109,-2	-.598,-3	-.127,-2	.225,-2	.107,-2	.697,-3	-.115,-2
27	.214,-2	.120,-2	.112,-2	.101,-2	-.105,-2	-.413,-3	.199,-2	.167,-2	.960,-3	.922,-4
28	.232,-2	.633,-3	.549,-3	-.197,-3	-.310,-3	.170,-2	.121,-2	.104,-2	.958,-4	.183,-3
29	.102,-2	.219,-3	-.771,-3	-.578,-3	.388,-3	.302,-2	.126,-2	-.115,-3	-.386,-3	.191,-3
30	-.455,-3	.103,-2	.213,-3	.310,-3	.249,-3	.560,-3	-.875,-3	-.260,-3	-.871,-3	-.474,-3
31	-.199,-2	.709,-3	.993,-3	-.158,-3	.153,-3	-.128,-2	-.208,-2	-.102,-3	-.943,-3	-.137,-2
32	-.115,-2	-.372,-3	.164,-2	.597,-3	.444,-3	-.156,-2	-.652,-3	-.359,-3	.348,-3	-.741,-3
33	.500,-3	.344,-3	.175,-2	.112,-2	.432,-3	-.124,-3	.578,-3	-.128,-2	.153,-2	-.273,-3
34	-.362,-2	.307,-3	.162,-2	.101,-2	-.861,-3	.990,-3	.606,-4	-.386,-4	.870,-3	.670,-3
35	-.506,-3	-.261,-3	.965,-3	.102,-2	-.108,-2	.105,-2	-.514,-3	.335,-3	.778,-4	.151,-2
36	-.864,-3	.160,-3	.850,-3	.393,-3	-.200,-4	-.867,-4	-.675,-3	.630,-3	.290,-3	.622,-3
37	-.936,-3	-.175,-3	.523,-3	.949,-3	-.219,-3	-.339,-3	.174,-3	.834,-3	.915,-3	-.966,-3
38	-.332,-3	-.152,-2	.498,-3	.787,-4	.528,-3	.461,-4	.782,-3	.245,-3	.608,-3	-.115,-2
39	-.186,-2	-.172,-2	.134,-2	.357,-3	.655,-3	.340,-3	.702,-3	.323,-3	-.106,-2	-.574,-3
40	-.179,-2	-.956,-3	.654,-3	.681,-3	-.480,-3	.215,-3	-.107,-3	.811,-3	-.177,-2	.616,-3
41	-.726,-3	.121,-3	-.297,-3	.108,-2	-.811,-3	-.479,-3	.171,-3	.105,-2	-.124,-2	-.275,-3
42	-.285,-3	-.295,-3	.288,-3	.135,-2	-.113,-4	-.293,-3	.121,-2	.962,-3	.490,-4	-.389,-3
43	-.240,-4	-.658,-3	.565,-3	.791,-3	.256,-3	.115,-3	.659,-3	.233,-3	.950,-3	.102,-2
44	-.306,-3	-.589,-3	-.544,-3	.993,-4	-.911,-4	.199,-4	.120,-3	-.147,-3	.511,-3	.763,-3
45	-.541,-3	-.218,-3	-.268,-3	-.749,-4	-.111,-3	.122,-2	-.766,-3	.123,-2	.303,-3	-.194,-3
46	-.262,-3	-.529,-4	.203,-3	.491,-3	-.257,-3	.134,-2	.272,-3	.105,-2	-.256,-3	.376,-3
47	-.586,-3	-.371,-3	.525,-3	.811,-3	-.342,-3	.632,-3	.595,-3	.930,-4	-.482,-3	.223,-3
48	-.962,-3	-.394,-3	.745,-3	.215,-3	-.205,-3	.364,-3	.294,-3	.164,-3	-.294,-3	.654,-3
49	-.120,-2	-.258,-3	.136,-3	-.430,-3	-.161,-3	.170,-4	.247,-4	.112,-3	-.362,-3	.155,-2
50	-.821,-3	-.835,-4	-.893,-3	-.117,-2	-.286,-3	.578,-3	.211,-3	-.529,-3	-.333,-4	.146,-2
51	.113,-3	-.754,-5	-.506,-4	-.780,-3	.401,-3	.138,-2	.328,-3	-.520,-3	.145,-3	.403,-3
52	.377,-3	.235,-4	.375,-3	-.809,-4	.365,-3	.316,-3	.345,-3	-.141,-4	.291,-3	-.506,-3
53	.443,-4	.706,-4	.306,-3	.336,-3	.269,-3	-.155,-3	.423,-3	-.202,-3	.294,-3	-.984,-3
54	.588,-4	.140,-2	.205,-3	.465,-3	-.839,-4	.480,-4	.100,-2	-.932,-4	-.550,-3	.325,-3
55	.277,-3	.164,-2	-.384,-3	.133,-3	-.162,-3	.379,-4	.556,-3	.131,-3	-.488,-3	.115,-2
56	.363,-3	.683,-4	-.542,-3	-.260,-3	.361,-3	.415,-3	-.156,-3	.545,-3	.297,-4	-.104,-3
57	.576,-3	.301,-3	-.251,-3	-.105,-2	.272,-3	.965,-3	-.791,-3	.227,-3	-.158,-3	-.918,-3
58	.505,-4	-.222,-3	-.178,-3	-.926,-3	-.427,-4	.733,-3	-.834,-3	-.223,-3	-.471,-4	-.715,-3
59	-.760,-3	-.680,-3	-.186,-3	.374,-4	.261,-3	.294,-3	-.308,-3	-.418,-3	-.196,-3	-.976,-3
60	-.936,-3	-.440,-3	-.187,-3	.279,-3	.274,-3	.444,-3	.128,-3	-.422,-3	-.401,-3	-.118,-2

Run No. 24 ; v component

Separation Distance (m.)

N	6	12	18	24	36	42	48	72	84	90
00	.345,-1	.284,-1	.252,-1	.147,-1	.150,-1	.148,-1	.799,-2	.530,-2	.754,-2	.817,-2
01	.378,-1	.313,-1	.281,-1	.166,-1	.113,-1	.127,-1	.110,-1	.799,-2	.820,-2	.726,-2
02	.275,-1	.263,-1	.210,-1	.192,-1	588,-2	.643,-2	.120,-1	.825,-2	.415,-2	.244,-2
03	.178,-1	.180,-1	.122,-1	.148,-1	.190,-2	-.225,-3	.261,-2	.123,-2	.138,-2	.790,-3
04	.121,-1	.826,-2	.599,-2	.445,-2	-.132,-2	-.384,-2	-.434,-2	-.134,-2	.207,-2	.221,-2
05	.117,-1	.414,-2	.184,-2	.284,-2	.182,-2	-.819,-3	.456,-2	-.920,-3	.124,-2	.355,-2
06	.129,-1	.491,-2	.386,-2	.290,-2	.479,-2	.291,-2	-.318,-2	-.135,-2	.204,-2	.343,-2
07	.919,-2	.344,-2	.318,-2	-.105,-2	.326,-2	.575,-2	-.216,-2	-.215,-3	.239,-2	.885,-3
08	.707,-2	.269,-2	.249,-2	-.299,-2	.107,-2	.407,-2	-.477,-2	-.317,-4	-.351,-3	-.194,-2
09	.732,-2	.267,-2	.143,-2	-.286,-2	-.571,-4	.896,-3	-.440,-2	.248,-4	-.222, 2	-.377,-2
10	.486,-2	-.358,-4	-.129,-2	-.160,-2	.628,-3	-.105,-2	-.112,-2	.983,-3	-.763,-3	-.273,-2
11	.452,-2	.134,-2	-.210,-2	-.133,-2	-.737,-3	.972,-4	.358,-3	.545,-3	.863,-3	-.182,-3
12	.550,-2	.200,-2	-.807,-3	-.587,-3	-.505,-3	.224,-2	.151,-2	-.547,-3	.100,-2	.532,-3
13	.378,-2	.269,-2	.649,-3	.157,-2	.171,-2	.258,-2	.163,-2	-.433,-3	-.174,-3	.314,-4
14	.278,-2	.173,-2	.654,-3	.133,-2	.121,-2	.174,-2	.125,-2	.882,-3	-.339,-3	.346,-3
15	.246,-2	-.114,-3	-.873,-3	.524,-3	-.395,-3	.864,-3	.354,-4	.181,-2	-.426,-3	-.638,-3
16	.251,-2	-.235,-3	-.164,-2	.160,-2	-.160,-2	-.127,-2	-.206,-3	.133,-2	.296,-3	.376,-3
17	.386,-2	.869,-4	-.134,-2	.127,-2	.406,-3	-.731,-3	.150,-4	-.985,-5	.117,-2	.225,-2
18	.363,-2	.317,-3	-.411,-3	.145,-2	.243,-2	.540,-3	-.100,-2	-.110,-2	.809,-3	.273,-2
19	.358,-2	-.221,-3	.270,-3	.136,-2	.207,-2	.230,-3	-.109,-2	-.129,-2	-.911,-3	.123,-3
20	.282,-2	-.192,-2	.197,-3	.576,-3	.843,-3	-.483,-3	.349,-3	.556,-3	-.233,-2	-.233,-2
21	-.599,-4	-.162,-2	.344,-3	.508,-3	-.460,-3	-.387,-3	.592,-3	.728,-3	-.527,-3	-.136,-2
22	-.527,-3	-.358,-3	.163,-3	-.134,-3	-.116,-2	.660,-3	-.578,-4	-.607,-3	.158,-2	-.160,-3
23	.591,-3	-.292,-3	.108,-3	.101,-3	-.201,-2	.795,-3	-.224,-2	-.649,-3	.166,-2	.570,-4
24	.461,-3	-.169,-3	.683,-3	.172,-3	-.190,-2	-.544,-3	-.210,-2	-.292,-3	.460,-3	.845,-4
25	.109,-4	.625,-3	.130,-2	-.143,-3	-.192,-2	-.917,-3	.431,-3	.678,-3	-.773,-4	-.340,-4
26	.131,-3	.959,-3	.685,-3	.406,-4	-.128,-2	.399,-3	.993,-4	.121,-2	.401,-3	.100,-4
27	.451,-3	.490,-3	.350,-3	.453,-3	-.944,-3	.146,-2	-.178,-2	.500,-3	.308,-3	-.804,-3
28	.439,-3	-.394,-3	.270,-3	.598,-3	-.716,-3	.511,-3	-.113,-2	-.582,-4	.286,-4	-.226,-2
29	.512,-3	-.491,-3	-.187,-3	-.923,-4	-.628,-3	-.454,-4	-.247,-3	-.439,-3	-.336,-3	-.194,-2
30	.947,-3	.136,-3	-.330,-3	-.211,-3	-.342,-3	-.219,-3	-.444,-3	-.800,-3	.155,-3	.390,-3
31	.125,-2	.328,-3	-.102,-2	-.387,-3	-.768,-3	.423,-3	-.117,-2	-.610,-3	.793,-3	.176,-2
32	.127,-3	-.144,-3	-.334,-3	-.227,-3	-.505,-3	.152,-2	-.113,-2	-.195,-3	.489,-3	.827,-3
33	-.389,-3	-.302,-3	.438,-3	.281,-4	-.995,-4	.888,-3	-.550,-3	-.419,-3	-.707,-4	.553,-3
34	-.257,-3	.326,-3	.565,-3	-.765,-3	.494,-4	-.100,-2	-.874,-3	-.864,-4	-.454,-3	.484,-3
35	.240,-3	.478,-3	.316,-3	-.886,-3	-.169,-3	-.150,-2	-.322,-3	.236,-3	-.119,-2	.678,-3
36	.126,-2	.800,-4	-.158,-3	-.461,-3	-.691,-3	-.113,-2	.559,-4	-.370,-3	-.637,-3	.890,-3
37	.119,-2	-.530,-3	-.823,-4	-.232,-3	-.511,-3	-.126,-2	.371,-3	-.730,-3	-.302,-3	.470,-3
38	.530,-4	.302,-4	.807,-4	-.645,-3	-.831,-3	-.701,-3	.247,-3	-.798,-4	-.130,-3	.749,-3
39	-.942,-3	.100,-2	-.620,-3	-.896,-3	-.565,-3	.795,-3	.712,-4	-.123,-3	.529,-3	.149,-2
40	-.840,-3	.223,-3	-.988,-3	-.110,-2	.338,-3	.125,-2	.663,-3	-.168,-3	.796,-4	.831,-3
41	-.307,-3	.179,-3	-.590,-3	-.119,-2	.436,-3	.498,-3	.986,-3	.691,-4	.239,-4	-.000,-3
42	-.403,-3	.594,-3	-.583,-3	-.765,-3	.933,-4	-.300,-3	.464,-3	.208,-3	.117,-3	-.932,-3
43	.102,-3	.121,-2	-.525,-3	.176,-3	.107,-2	.200,-4	.262,-4	.425,-3	.433,-3	-.644,-3
44	.211,-3	.128,-2	-.830,-3	.400,-3	.663,-3	.804,-3	.543,-3	.694,-3	.568,-3	-.162,-2
45	-.359,-3	.735,-3	-.655,-3	-.378,-3	-.377,-3	.145,-2	.360,-3	.276,-3	.208,-3	-.132,-2
46	-.483,-3	.499,-3	-.209,-3	-.542,-3	-.860,-3	.923,-3	.274,-4	-.295,-3	.751,-3	-.439,-3
47	-.716,-3	.623,-3	-.629,-3	-.112,-3	-.117,-2	.283,-3	.573,-3	-.320,-3	.101,-2	-.325,-3
48	.362,-4	.101,-2	-.608,-3	.157,-3	-.278,-3	.140,-3	.851,-3	-.212,-3	-.104,-3	-.679,-4
49	.629,-3	.816,-3	-.211,-3	-.609,-3	.525,-3	.213,-3	.575,-3	.159,-3	-.398,-4	-.204,-3
50	-.321,-3	.370,-3	-.444,-3	-.374,-3	.632,-3	-.173,-3	-.160,-3	.252,-3	-.616,-4	-.511,-3
51	-.777,-3	-.202,-3	-.634,-3	.164,-3	.308,-3	-.521,-3	-.559,-3	-.148,-4	-.324,-3	-.137,-3
52	.211,-3	-.462,-3	-.997,-3	.550,-3	.292,-3	-.909,-3	-.472,-3	-.855,-4	.176,-3	.663,-3
53	.486,-3	-.560,-4	-.220,-3	.517,-3	.346,-3	-.777,-3	.431,-3	.139,-3	.613,-3	.471,-3
54	.420,-3	-.109,-3	.325,-3	.190,-3	.243,-3	-.506,-4	.768,-3	.137,-3	.114,-3	.246,-3
55	.397,-3	.130,-3	-.340,-3	-.966,-4	.340,-3	.557,-3	-.551,-4	.918,-4	-.414,-3	-.855,-4
56	.512,-3	.227,-3	-.470,-3	.265,-3	.428,-3	.180,-3	-.356,-3	.767,-4	-.222,-3	-.371,-3
57	.399,-3	.859,-4	-.481,-3	.442,-3	.322,-4	.268,-3	-.479,-3	.279,-3	.195,-3	-.301,-3
58	.514,-4	.227,-3	-.958,-3	.709,-3	-.132,-3	.293,-3	-.843,-3	.358,-3	.361,-3	-.415,-3
59	-.201,-3	.328,-4	-.146,-2	.532,-3	.738,-3	.274,-3	-.510,-3	.167,-3	.445,-3	.143,-4
60	-.290,-5	-.700,-3	-.134,-2	-.416,-4	.100,-2	.642,-3	-.966,-5	.107,-3	.235,-2	.327,-3

Run No. 27 ; u component

Separation Distance (m.)

N	6	12	18	24	30	48	60	72	84	96
00	.515	.265	.336							
01	.369	.824	.225							
02	.132	.382,-1	.746,-1							
03	.418,-1	.373,-1	.1[illegible],-1							
04	.220,-1	.197,-1	.518,-2							
05	.1[illegible],-1	.124,-1	.[illegible]26,-2							
06	.[illegible]22,-2	.451,-2	.[illegible]74,-3							
07	.247,-2	-.[illegible]83,-2	-.439,-2							
08	.184,-1	-.[illegible]38,-2	-.[illegible]05,-2							
09	.[illegible]96,-2	.861,-3	-.[illegible]05,-2							
10	-.[illegible]33,-2	.5[illegible]6,-3	-.2[illegible]0,-2							
11	-.4[illegible]6,-2	-.14[illegible],-2	.3[illegible]4,-3							
12	-.405,-2	-.[illegible]1[illegible],-3	.241,-2							
13	-.271,-2	.4[illegible]0,-3	.317,-2							
14	.122,-2	.231,-2	.[illegible]84,-3							
15	.271,-2	.304,-2	.[illegible]01,-3							
16	.151,-2	-.14[illegible],-2	.156,-2							
17	-.228,-3	-.2[illegible]0,-2	.282,-2							
18	-.116,-2	.1[illegible],-2	.261,-2							
19	-.145,-2	.207,-2	.189,-2							
20	-.21[illegible],-2	.2[illegible]0,-3	.249,-2							
21	-.201,-2	-.4[illegible]3,-3	.150,-2							
22	-.21[illegible],-2	-.783,-3	.444,-4							
23	-.274,-3	-.721,-3	.455,-3							
24	.571,-3	-.20[illegible],-3	.11[illegible],-2							
25	-.785,-3	-.85[illegible],-4	.1[illegible]0,-2							
26	.429,-3	.134,-2	.107,-2							
27	.116,-2	.12[illegible],-2	-.135,-3							
28	.[illegible]32,-3	-.2[illegible]0,-3	-.345,-3							
29	-.843,-4	-.127,-2	.2[illegible]0,-3							
30	-.4[illegible]2,-3	-.[illegible]22,-2	.183,-3							
31	-.24[illegible],-3	-.181,-2	-.2[illegible]3,-3							
32	.147,-3	-.734,-3	-.[illegible]81,-3							
33	.474,-4	.4[illegible]3,-3	-.[illegible]30,-3							
34	-.52[illegible],-3	.[illegible]79,-3	-.[illegible]19,-3							
35	-.15[illegible],-2	.[illegible]88,-3	-.[illegible]37,-3							
36	-.117,-2	.[illegible]61,-4	-.5[illegible]4,-3							
37	.784,-3	-.[illegible]2[illegible],-3	.300,-3							
38	.1[illegible],-2	-.7[illegible]3,-3	-.2[illegible]2,-3							
39	-.[illegible]35,-3	-.[illegible]4[illegible],-3	-.[illegible]80,-3							
40	-.15[illegible],-2	.137,-4	-.[illegible]0[illegible],-3							
41	-.[illegible]54,-3	.[illegible]65,-3	-.[illegible]1[illegible],-3							
42	.311,-3	.[illegible]4[illegible],-3	-.14[illegible],-2							
43	-.[illegible]42,-3	.[illegible]33,-3	-.12[illegible],-2							
44	-.1[illegible],-2	-.443,-3	-.[illegible]5[illegible],-3							
45	-.148,-2	-.[illegible]30,-3	-.12[illegible],-3							
46	-.191,-2	-.[illegible]2[illegible],-3	-.1[illegible]5,-3							
47	-.[illegible]2[illegible],-3	-.44[illegible],-3	.139,-4							
48	-.230,-3	.14[illegible],-3	.2[illegible]5,-3							
49	-.[illegible]54,-3	.[illegible]47,-4	.20[illegible],-3							
50	-.104,-2	.407,-3	-.[illegible]38,-4							
51	-.13[illegible],-2	.1[illegible]5,-2	.2[illegible]1,-3							
52	-.251,-3	.128,-2	-.[illegible]33,-3							
53	-.404,-3	.151,-2	-.[illegible]0[illegible],-3							
54	-.[illegible]00,-3	.132,-2	-.101,-2							
55	.4[illegible],-3	.[illegible]2[illegible],-3	-.[illegible]23,-3							
56	.710,-3	.2[illegible]5,-3	-.[illegible]0[illegible],-3							
57	-.1[illegible],-3	.4[illegible],-3	-.7[illegible]2,-3							
58	.[illegible]48,-4	.4[illegible],-3	-.14[illegible],-3							
59	.420,-3	.2[illegible],-4	.409,-3							
60	.137,-3	-.141,-4	.359,-3							

Run No. 27 ; v component

Separation Distance (m.)

N	6	12	18	24	36	42	48	72	84	90
00	.266	.319	.260							
01	.229	.254	.212							
02	.136	.131	.10[illegible]							
03	.725,-1	.627,-1	.4[illegible]0,-1							
04	.459,-1	.300,-1	.2[illegible]0,-1							
05	.351,-1	.213,-1	.1[illegible]9,-1							
06	.217,-1	.147,-1	.8[illegible]4,-2							
07	.158,-1	.876,-2	.538,-2							
08	.143 -1	.173,-2	.375,-2							
09	.102,-1	-.100,-2	.293,-3							
10	.536,-2	.547,-3	-.258,-2							
11	.428,-2	.803,-3	-.151,-2							
12	.408,-2	.104,-2	.[illegible]20,-3							
13	.204,-2	.231,-2	.130,-2							
14	.[illegible]52,-3	.138,-2	.182,-4							
15	.213,-2	.150,-2	-.2[illegible]9,-3							
16	.4[illegible]0,-2	.422,-3	-.132,-2							
17	.456,-2	-.101,-2	-.[illegible]73,-2							
18	.144,-2	-.2[illegible]6,-3	-.813,-3							
19	-.505,-3	-.599,-3	-.[illegible]62,-3							
20	-.137,-2	-.821,-3	-.115,-2							
21	-.322,-3	.150,-3	-.591,-3							
22	.431,-3	.[illegible]2[illegible],-3	-.372,-3							
23	.308,-3	.700,-4	.684,-4							
24	-.321,-3	.874,-3	.116,-2							
25	.522,-3	.121,-2	-.120,-3							
26	.899,-3	.[illegible]58,-3	-.[illegible]28,-3							
27	-.424,-4	-.730,-3	-.131,-3							
28	-.101,-2	-.115,-2	.484,-3							
29	-.544,-3	.175,-4	.172,-3							
30	-.172,-3	-.[illegible]73,-4	-.201,-3							
31	.414,-3	-.224,-3	-.303,-3							
32	.731,-3	.406,-3	-.[illegible]63,-4							
33	-.816,-3	.[illegible]99,-3	.[illegible]89,-3							
34	-.[illegible]67,-3	.354,-3	.[illegible]50,-3							
35	-.216,-3	-.[illegible]68,-3	.[illegible]62,-3							
36	-.517,-3	-.[illegible]13,-3	.147,-2							
37	.399,-3	-.[illegible]51,-3	.[illegible]72,-3							
38	-.[illegible]80,-4	.[illegible]59,-4	-.190,-3							
39	-.341,-3	-.[illegible]0[illegible],-3	.[illegible]85,-4							
40	.119,-2	-.[illegible]8[illegible],-3	.422,-3							
41	.112,-2	-.120,-3	.[illegible]73,-3							
42	.174,-3	-.[illegible]76,-3	.[illegible]13,-3							
43	-.[illegible]50,-3	-.127,-2	.417,-3							
44	-.[illegible]43,-3	-.[illegible]10,-2	.[illegible]58,-4							
45	-.595,-3	-.[illegible]1[illegible],-3	-.[illegible]61,-3							
46	-.[illegible]1[illegible],-4	-.102,-3	-.1[illegible],-3							
47	.[illegible]03,-3	.[illegible]0[illegible],-3	.[illegible]49,-3							
48	.[illegible]18,-3	.131,-3	.[illegible]38,-4							
49	.[illegible]2[illegible],-3	.[illegible]70,-3	.[illegible]73,-3							
50	-.127,-3	.[illegible]08,-3	-.[illegible]87,-3							
51	-.[illegible]76,-3	.[illegible]87,-3	-.[illegible]05,-3							
52	-.[illegible]7[illegible],-3	.[illegible]45,-3	.[illegible]04,-3							
53	.[illegible]5[illegible],-4	-.[illegible]74,-3	.[illegible]13,-3							
54	-.[illegible]6[illegible],-3	-.[illegible]88,-4	-.[illegible]15,-3							
55	.[illegible]84,-4	.[illegible]28,-3	.[illegible]82,-3							
56	.[illegible]91,-3	.[illegible]76,-3	.[illegible]17,-2							
57	.[illegible]22,-3	.[illegible]35,-3	.[illegible]28[illegible],-3							
58	-.[illegible]41,-3	.[illegible]45,-3	-.[illegible]2[illegible],-3							
59	-.[illegible]03,-3	.[illegible]0[illegible],-3	-.[illegible]02,-3							
60	-.919.-3	[illegible]47.-3	-.848.-5							

Run No. 32 ; u component

N	Separation Distance (m.) 6	12	18	24	36	42	48	72	84	90
00	.152	.147	.150	.146	.148	.152	.154	.152	.153	.157
01	.683,-1	.652,-1	.670,-1	.654,-1	.654,-1	.675,-1	.682,-1	.672,-1	.677,-1	.705,-1
02	.306,-2	.180,-2	.221,-2	.264,-2	.142,-2	.172,-2	.177,-2	.128,-2	.125,-2	.219,-2
03	.160,-2	.490,-3	.715,-3	.874,-3	.638,-4	.406,-4	.740,-3	.54[illegible],-3	.286,-4	.504,-3
04	.146,-2	.455,-3	.414,-3	.635,-3	.773,-4	-.264,-3	.112,-2	.786,-3	.171,-3	.323,-3
05	.172,-2	-.628,-5	.157,-3	.740,-3	-.373,-3	-.707,-3	.505,-3	-.198,-3	.465,-4	.104,-3
06	.113,-2	-.582,-3	.102,-3	.191,-3	-.282,-3	-.381,-3	-.146,-3	-.657,-3	.880,-4	.399,-3
07	.713,-3	-.265,-3	.568,-4	-.246,-4	-.417,-4	-.212,-3	-.431,-3	-.482,-3	-.541,-4	.419,-3
08	.471,-3	.255,-3	.706,-4	-.231,-3	-.305,-3	-.261,-3	.189,-3	-.151,-3	-.217,-3	-.366,-4
09	.168,-3	.423,-3	.418,-3	-.343,-3	-.435,-4	-.557,-3	.388,-3	.186,-3	-.232,-3	.202,-3
10	-.105,-3	.819,-4	.357,-3	-.192,-3	.436,-3	-.80[illegible],-3	-.173,-3	.801,-4	-.168,-3	.854,-3
11	-.835,-4	-.236,-3	.116,-3	-.147,-3	.230,-3	-.412,-3	-.246,-3	-.102,-3	.351,-4	.765,-3
12	-.299,-3	-.396,-3	.286,-3	.863,-4	.190,-5	-.443,-4	.106 -3	.209,-3	-.173,-3	.419,-3
13	-.407 -3	-.389,-3	.224,-3	.236,-3	-.583,-4	.126,-3	.316,-3	.288,-3	-.273,-3	.249,-3
14	-.732,-4	-.147,-3	-.603,-4	.571,-4	-.628,-4	.156,-3	.244,-3	-.723,-4	-.308,-4	.306,-3
15	-.825,-4	.209,-3	-.967,-4	-.415,-5	-.236,-4	-.257,-4	-.346,-4	.405,-4	.666,-4	.203,-3
16	-.341,-3	.208,-3	.840,-4	-.275,-3	.128,-4	-.173,-3	-.182,-3	.224,-3	.133,-3	-.850,-5
17	-.407,-3	-.112,-3	.292,-3	-.152,-3	.231,-4	-.223,-4	.799,-4	.620,-4	-.115,-3	-.332,-4
18	-.544,-3	-.249,-3	.606,-3	.147,-3	-.244,-3	.264,-3	-.145,-3	-.136,-5	-.223,-3	.197,-4
19	-.472,-3	-.827,-4	.508,-3	.184,-3	-.255,-3	.238,-3	-.238,-3	.115,-3	.125,-3	.314,-4
20	-.223,-3	.533,-4	.220,-3	.140,-3	-.808,-4	.115,-3	.912,-4	.255,-3	.168,-3	.139,-3
21	-.149,-3	.259,-4	.155,-3	.205,-4	-.604,-4	.678,-4	.454,-4	.192,-3	-.749,-4	.162,-3
22	-.114,-3	.827,-4	.589,-4	-.579,-4	.972,-4	-.127,-4	-.185,-5	.275,-3	.238,-4	-.444,-4
23	-.448,-3	.116,-3	-.891,-5	-.348,-4	.219,-3	-.607,-4	.344,-4	.186,-3	.184,-3	-.137,-3
24	-.661,-3	.121,-3	-.540,-4	-.594,-4	.115,-3	-.561,-4	.145,-3	-.143,-4	.738,-4	-.118,-3
25	-.336,-3	-.527,-4	.955,-4	-.504,-4	-.710,-4	.377,-4	.176,-3	-.423,-4	-.128,-3	.842,-4
26	-.276,-3	-.101,-3	.273,-3	-.969,-4	.580,-4	.209,-4	.322,-4	.643,-4	-.581,-4	.158,-4
27	-.153,-3	.647,-4	.169,-3	-.131,-3	.107,-3	-.264,-4	-.405,-4	.114,-3	.255,-4	-.192,-3
28	-.118,-3	.665,-4	-.500,-4	-.230,-3	.677,-4	.367,-4	-.115,-3	.101,-3	-.109,-3	-.275,-3
29	-.619,-4	-.261,-4	-.140,-3	-.208,-3	.123,-4	.147,-3	-.144,-3	.729,-4	-.137,-3	-.166,-3
30	.283,-5	.198,-4	-.171,-3	-.532,-4	-.969,-5	.107,-3	.319,-4	-.614,-4	-.744,-4	.828,-4
31	-.313,-4	.256,-4	-.163,-3	.209,-4	.671,-4	.178,-3	.418,-4	-.828,-4	.728,-4	.103,-3
32	-.885,-4	.218,-4	-.872,-4	.701,-4	.960,-4	.109,-3	-.169,-4	.398,-5	.764,-4	.565,-4
33	.209,-4	.359,-4	-.386,-4	.921,-4	.108,-3	-.246,-4	-.731,-5	.380,-4	.574,-4	.105,-3
34	.146,-4	.112,-4	-.416,-4	.442,-4	.808,-4	-.802,-5	.135,-4	-.283,-4	.243,-4	.752,-4
35	-.480,-4	.904,-5	.914,-4	-.314,-5	.781,-5	.614,-5	-.306,-4	-.420,-4	.307,-5	.332,-6
36	-.785,-4	.314,-4	.583,-4	-.283,-4	-.861,-4	.379,-4	-.114,-3	.109,-4	-.148,-4	.154,-5
37	-.419,-4	.524,-4	-.558,-4	-.641,-4	-.112,-3	.932,-4	-.150,-3	.190,-4	-.649,-5	.156,-5
38	-.162,-4	.445,-4	-.382,-4	-.447,-4	-.724,-4	.170,-4	-.623,-4	-.152,-4	.168,-5	.158,-5
39	-.332,-4	-.518,-4	.373,-4	-.769,-4	-.197,-4	-.472,-4	-.689,-5	-.504,-4	.283,-4	.595,-5
40	-.302,-4	-.785,-4	-.155,-4	-.602,-4	.223,-4	-.548,-4	-.385,-4	-.712,-4	.983,-4	.848,-5
41	.453,-5	.751,-5	-.636,-4	.199,-4	.627,-4	.460,-4	-.968,-4	-.577,-5	.948,-4	-.113,-4
42	-.120,-4	.360,-4	.997,-5	.611,-5	.102,-3	.421,-4	-.370,-4	.156,-5	.360,-4	-.298,-4
43	.325,-4	.531,-5	.486,-4	-.385,-4	.452,-4	-.160,-4	.928,-4	-.199,-4	.290,-4	.277,-4
44	.492,-4	-.188,-4	.168,-4	-.284,-4	-.215,-4	-.340,-4	.984,-4	.208,-4	-.186,-4	.685,-4
45	-.185,-5	.166,-4	-.553,-5	-.427,-5	-.865,-4	-.412,-4	.455,-4	.357,-4	-.279,-4	.782,-4
46	.621,-5	-.660,-5	.181,-4	-.206,-4	-.617,-4	-.547,-4	.269,-4	.334,-4	-.158,-4	.578,-4
47	.205,-4	-.254,-4	.278,-4	.164,-4	-.399,-4	.385,-5	.414,-4	.226,-4	-.470,-4	.238,-4
48	.596,-4	-.148,-4	.323,-5	.268,-4	-.108,-4	.117,-4	-.388,-5	-.212,-4	-.192,-4	-.483,-4
49	.345,-4	.109,-4	-.411,-4	-.817,-5	-.240,-6	-.786,-5	-.108,-4	-.394,-5	.674,-5	-.905,-4
50	.307,-4	-.757,-4	-.897,-4	-.362,-4	-.540,-5	-.236,-4	-.177,-4	.312,-4	.334,-4	-.552,-4
51	.292,-4	-.124,-3	-.598,-4	-.919,-5	-.215,-4	.113,-4	-.220,-4	.893,-5	.162,-4	-.284,-4
52	.295,-4	-.379,-4	.812,-5	-.550,-5	-.606,-4	.164,-4	-.141,-4	-.206,-4	.242,-4	-.673,-5
53	.183,-4	.141,-4	.814,-5	-.336,-4	-.964,-4	-.242,-4	.326,-4	-.140,-4	.137,-4	.105,-4
54	-.363,-4	.572,-4	-.109,-4	-.272,-4	-.726,-4	-.283,-4	.612,-4	.103,-4	-.424,-4	.120,-4
55	-.412,-4	.172,-4	-.581,-7	.469,-5	-.424,-4	.449,-5	.278,-4	.179,-4	-.439,-4	.799,-4
56	-.491,-4	-.805,-4	.305,-4	.145,-4	-.358,-4	-.117,-5	-.309,-5	.398,-4	-.416,-4	.619,-4
57	-.170,-4	-.100,-3	.338,-4	.825,-5	-.361,-4	-.335,-4	-.404,-5	.346,-4	-.251,-4	-.156,-4
58	.862,-5	-.453,-4	.376,-5	.321,-5	-.372,-4	-.207,-4	.683,-5	.242,-4	-.128,-4	-.297,-4
59	.382,-4	-.127,-4	-.486,-4	-.253,-4	-.402,-4	.242,-4	-.472,-4	.361,-4	.975,-5	-.204,-4
60	.567,-4	.431,-5	-.700,-4	-.341,-4	-.268,-4	.484,-4	-.807,-4	.300,-4	.164,-4	-.433,-5

Run No. 32 ; v component

N	Separation Distance (m.) 6	12	18	24	36	42	48	72	84	20
00	.680,-3	.180,-2	.141,-2	.145,-2	.132,-2	.120,-2	.958,-3	.112,-2	.543,-3	.120,-2
01	.927,-3	.142,-2	.139,-2	.135,-2	.116,-2	.113,-2	.760,-3	.932,-3	.552,-3	.078,-3
02	.787,-3	.743,-3	.843,-3	.748,-3	.695,-3	.702,-3	.361,-3	.400,-3	.280,-3	.254,-3
03	.378,-3	.401,-3	.275,-3	.202,-3	.260,-3	.221,-3	.139,-3	.906,-4	.352,-4	.146,-6
04	.193,-3	.305,-3	.165,-3	-.194,-4	-.134,-4	.265,-4	.506,-4	-.554,-4	-.311 -4	-.430,-4
05	.262,-3	.212,-3	.156,-3	-.612,-4	-.198,-4	.631,-4	.126,-4	-.370,-4	-.200.-4	-.597,-4
06	.292,-3	.107,-3	.461,-4	-.147,-3	.180,-4	.959,-4	.445,-4	-.995,-4	-.411,-4	.302,-4
07	.210,-3	.716,-4	-.399,-4	-.221,-4	.400,-4	.101,-3	.906,-4	-.587,-4	-.805,-4	.211,-3
08	.231,-3	.649,-5	-.663,-4	.791,-4	-.419,-4	.305,-4	.692,-4	.150,-4	.114,-4	.171,-3
09	.217,-3	.466,-4	-.229,-4	.416,-4	-.222,-4	-.804,-4	-.547,-4	-.396,-4	-.243,-4	.200,-3
10	.123,-3	.607,-4	-.143,-4	-.198,-4	.112,-3	-.203,-4	-.662,-5	-.140,-3	-.503,-4	.213,-3
11	.861,-4	-.654,-4	-.113,-3	-.371,-4	.174,-5	-.272,-4	.107,-3	-.118,-3	.512,-4	.126,-3
12	.628,-4	-.139,-3	-.168,-3	-.392,-4	-.178,-3	-.676,-4	.330,-4	-.147,-3	.113.-3	.1 2,-3
13	.329,-4	-.154,-3	-.135,-3	.607,-4	-.153,-3	.266,-5	.516,-5	-.971,-4	.669,-4	.806,-4
14	-.185,-4	-.103,-3	-.682,-4	.695,-4	-.102,-3	.759,-4	.641,-5	.215,-5	.812,-5	.596,-4
15	-.717,-4	-.174,-3	.673,-5	-.518,-4	-.464,-4	.625,-4	.864,-5	.167,-3	-.617,-4	.330,-4
16	-.266,-4	-.217,-3	.191,-4	-.744,-4	.530,-5	-.352,-4	-.144,-4	.110,-3	-.173,-4	.421,-4
17	-.422,-4	-.143,-3	-.522,-5	-.841,-4	-.146,-5	-.548,-4	.279,-4	-.850,-4	.918,-4	.195,-4
18	-.135,-3	-.120,-3	767,-5	-.219,-4	-.590,-4	.577,-4	.230,-4	-.624,-4	.117,-3	-.568,-4
19	-.197,-3	-.156,-4	-.224,-4	.446,-4	-.151,-4	.432,-4	.442,-5	.335,-4	.678,-4	-.111,-3
20	-.194,-3	-.276,-4	.179,-5	.836,-4	.480,-4	-.369,-4	.332,-4	.318,-4	.568,-4	-.929,-4
21	-.165,-3	-.524,-4	.399,-4	.522,-4	.179,-4	.112,-4	.618,-4	.104,-3	.412,-4	-.173,-4
22	-.202,-3	-.152,-3	.136,-3	-.665,-4	-.233,-4	.475,-4	.109,-3	.834,-4	.105,-4	-.131,-4
23	-.167,-3	-.214,-3	.107,-3	-.835,-4	-.145,-5	.187,-4	.670,-4	-.344,-4	.105,-3	-.155,-3
24	-.755,-4	-.448,-4	-.336,-4	.791,-5	-.213,-4	-.336,-4	-.249,-4	-.246,-4	.554,-4	-.141,-3
25	-.546,-4	.599,-4	-.846,-4	-.727,-4	-.293,-4	-.537,-4	-.884,-4	.819,-5	.423,-4	-.521,-4
26	-.733,-4	.267,-4	-.371,-4	-.762,-4	.588,-4	-.709,-4	-.792,-4	.319,-4	.765,-4	-.478,-4
27	-.883,-4	.252,-5	-.219,-4	.413,-4	.990,-4	-.648,-4	-.409,-4	.131,-4	.695,-4	-.273,-4
28	-.126,-3	.579,-4	-.660,-4	.753,-4	.272,-4	.785,-4	-.902,-4	.736,-5	.220,-4	-.843,-4
29	-.175,-3	.688,-4	-.906,-4	-.558,-6	-.674,-4	.945,-4	-.122,-3	.667,-4	.731,-4	-.136,-3
30	-.128,-3	.371,-4	-.444,-5	-.629,-4	-.862,-4	-.140,-4	-.312,-4	.288,-4	.459,-4	-.742,-4
31	-.792,-4	-.119,-4	.236,-4	-.680,-4	-.767,-4	.715,-5	.195,-4	-.256,-4	-.338,-5	-.401,-4
32	-.775,-4	.124,-4	-.268,-4	-.271,-4	-.260,-4	.180,-4	-.411,-5	-.639,-4	-.138,-4	.449,-4
33	-.134,-3	.303,-4	.415,-4	.375,-4	-.156,-4	.300,-5	-.391,-4	-.116,-3	-.338,-4	.210,-4
34	-.173,-3	-.534,-4	.144,-3	.358,-4	-.319,-4	.597,-4	-.104,-4	-.451,-4	-.468,-4	-.104,-3
35	-.127,-3	-.794,-4	.103,-3	-.274,-4	-.201,-4	.822,-4	.399,-4	-.522,-4	.259,-5	-.118,-3
36	-.356,-4	-.168,-4	.541,-4	-.743,-4	-.422,-5	.307,-5	.248,-5	-.178,-4	.781,-5	-.199,-4
37	.237,-4	.540,-4	.731,-4	-.106,-3	-.499,-4	-.609,-4	-.273,-4	.315,-4	-.146,-4	.394,-5
38	.262,-4	.326,-4	.363,-4	-.477,-4	-.241,-4	-.377,-4	-.196,-4	-.333,-4	-.474,-4	-.117,-4
39	-.349,-4	.261,-4	-.360,-4	-.937,-5	-.692,-5	.605,-4	.655,-4	-.453,-4	-.322,-4	.392,-4
40	-.546,-4	.817,-5	-.407,-4	-.480,-4	-.287,-4	.737,-4	.445,-4	.371,-4	.321,-4	.567,-4
41	-.294,-4	-.101,-4	-.259,-4	-.219,-4	-.915,-4	.170,-4	-.315,-4	.141,-4	.154,-4	.127,-4
42	-.794,-4	.538,-4	-.881,-4	-.302,-4	-.113,-3	.672,-4	-.174,-4	-.208,-4	.156,-5	.131,-4
43	-.866,-4	.424,-4	-.901,-4	.163,-4	-.746,-4	.177,-4	.496,-5	-.848,-4	.771,-5	.113,-3
44	-.201,-4	-.894,-6	-.279,-4	.186,-4	.855,-5	-.106,-3	-.197,-4	-.856,-4	-.834,-5	.798,-4
45	-.108,-4	.227,-4	-.151,-4	-.184,-4	-.110,-4	-.961,-4	-.263,-4	-.228,-4	-.341,-4	.566,-4
46	.124,-4	-.214,-4	-.452,-4	.101,-4	-.537,-4	-.300,-4	-.250,-4	.429,-4	.250,-4	.508,-4
47	.247,-4	-.227,-4	.535,-5	.385,-4	-.919,-4	-.293,-4	-.899,-6	.362,-4	.333,-4	-.126,-4
48	.199,-4	.292,-4	-.139,-4	.393,-4	-.277,-4	-.889,-4	.172,-4	-.222,-4	.519,-5	-.389,-4
49	.353,-4	.188,-4	-.476,-4	.238,-4	.376,-4	-.951,-4	-.126,-4	.243,-4	.748,-4	-.420,-4
50	.139,-4	.569,-4	.770,-5	.869,-5	.481,-5	-.962,-5	-.378,-4	-.170,-4	.218,-4	-.170,-4
51	.315,-4	.727,-4	.589,-4	-.413,-5	-.309,-4	-.224,-4	.203,-4	-.835,-4	-.611,-4	-.462,-5
52	.117,-3	-.525,-4	.428,-4	-.260,-4	-.679,-4	-.217,-4	.613,-4	-.490,-4	-.493,-4	-.394,-4
53	.123,-3	-.615,-4	.298,-6	-.423,-4	-.845,-4	-.594,-4	.507,-4	-.310,-4	-.505,-4	-.462,-4
54	.152,-3	-.281,-4	-.708,-5	-.417,-5	-.615,-4	-.457,-4	-.489,-6	-.507,-4	.689,-5	.242,-4
55	.179,-3	-.174,-4	-.463,-4	.501,-4	-.720,-4	-.249,-4	-.471,-4	-.992,-4	.980,-4	.106,-3
56	.104,-3	.213,-4	-.185,-4	.406,-4	-.559,-4	-.139,-4	-.609,-4	-.102,-3	.708,-4	.286,-4
57	.600,-4	.492,-5	.174,-4	.302,-4	-.269,-4	-.455,-4	-.233,-4	-.690,-4	.155,-4	-.605,-4
58	.416,-4	-.135,-4	-.462,-4	.645,-5	-.295,-4	-.423,-4	.169,-4	-.616,-4	-.379,-4	-.415,-4
59	.852,-4	-.109,-4	-.494,-4	-.339,-4	-.332,-4	.137,-5	.749,-5	-.393,-4	-.501,-4	-.873,-4
60	.107,-3	-.319,-5	-.184,-4	-.369,-4	-.318,-4	-.503,-5	-.193,-5	-.769,-5	-.583,-4	-.103,-3

Run No. 35s; u component

	Separation Distance (m.)									
N	6	12	18	24	36	42	48	72	84	90
00	.956,-1	.963,-1	.892,-1	.111	.125	.974,-1	.141	.117	.140	.109
01	.514,-1	.401,-1	.391,-1	.545,-1	.562,-1	.459,-1	.630,-1	.508,-1	.666,-1	.494,-1
02	.107,-1	-.175,-2	-.210,-2	.347,-2	-.210,-3	.912,-3	-.345,-2	-.119,-2	.435,-2	.667,-2
03	.196,-2	.542,-2	.050,-3	-.241,-2	-.176,-2	.115,-2	-.664,-2	.103,-2	.130,-2	.354,-2
04	.114,-2	.642,-2	.207,-2	-.324,-2	-.382,-3	.120,-2	.655,-3	.489,-2	.295,-4	.365,-2
05	.365,-3	.112,-3	-.831,-4	-.126,-2	.118,-2	-.296,-2	.838,-3	.378,-2	-.271,-3	.163,-2
06	-.413,-2	-.421,-2	.106,-2	-.353,-2	.341,-2	-.344,-2	.181,-2	.161,-2	.701,-3	-.567,-3
07	-.262,-2	-.239,-2	-.658,-3	-.352,-2	.217,-2	-.242,-2	-.297,-2	-.121,-2	.101,-3	.813,-3
08	.144, 2	-.649,-3	-.192,-2	.427,-3	.653,-4	-.685,-3	-.287,-2	-.129,-2	.476,-4	.137,-2
09	.256,-2	.148,-2	.251,-2	.805,-3	-.345,-4	.655,-4	-.742,-6	.140,-2	.323,-3	-.170,-2
10	.193,-3	.125,-2	.310,-2	-.183,-3	.569,-3	.799,-3	.652,-4	.574,-3	.461,-3	-.243,-2
11	-.231,-2	.251,-4	-.705,-3	-.550,-3	.945,-3	-.791,-4	-.319,-2	-.166,-2	-.305,-3	-.105,-2
12	-.204,-2	-.464,-3	-.993,-3	-.919,-4	.245,-2	.298,-3	-.453,-2	-.199,-2	-.790,-3	.101,-2
13	-.120,-2	.811,-4	.485,-3	.516,-4	.265,-2	.544,-3	-.242,-2	-.183,-2	-.297,-2	.504,-3
14	-.346,-3	.842,-3	.155,-2	.293,-3	.510,-3	.761,-3	-.114,-3	-.236,-2	-.367,-2	-.122,-2
15	.802,-3	.194,-3	.122,-2	.308,-3	.306,-3	.810,-3	.472,-3	-.153,-2	-.117,-2	.101,-2
16	.414,-3	-.646,-3	.110,-2	.656,-3	.698,-3	.106,-2	.205,-3	-.552,-3	.133,-2	.195,-2
17	-.116,-2	-.547,-3	.114,-2	.568,-3	.513,-3	.892,-3	.404,-3	.516,-3	.323,-3	.907,-3
18	-.126,-2	-.186,-3	.617,-3	-.351,-3	-.121,-2	.630,-3	.935,-3	.775,-3	-.116,-2	-.305,-3
19	-.166,-2	-.591,-3	.135,-3	.717,-4	-.115,-2	.283,-3	.112,-2	.728,-4	-.109,-2	-.616,-3
20	-.102,-2	-.373,-3	-.613,-3	.569,-3	-.179,-3	-.290,-4	.468,-3	-.374,-3	-.892,-3	-.380,-3
21	-.704,-4	-.367,-3	-.627,-3	.760,-3	.101,-2	-.232,-3	-.672,-4	.126,-3	-.774,-3	.327,-3
22	-.872,-4	-.375,-3	.317,-3	.103,-2	.129,-2	-.460,-3	.507,-3	.131,-2	-.989,-3	.470,-3
23	.734,-4	.249,-3	.416,-3	.177,-3	.349,-3	-.240,-3	.981,-3	.547,-3	-.966,-4	.489,-3
24	.172,-3	.540,-3	-.640,-4	-.929,-3	-.102,-3	-.176,-4	.424,-3	-.239,-3	.541,-5	.166,-3
25	-.143,-3	.367,-3	-.163,-3	-.904,-3	.459,-3	.216,-3	-.489,-3	.153,-3	-.318,-3	-.170,-3
26	.617,-4	.201,-3	.135,-4	-.349,-3	.890,-3	.206,-3	-.544,-3	.331,-3	.856,-4	.554,-3
27	-.251,-3	.262,-3	-.354,-3	-.446,-3	.896,-3	-.308,-4	.163,-3	.318,-3	.368,-3	.214,-3
28	-.518,-3	-.147,-4	-.401,-3	-.165,-3	.421,-3	-.116,-3	.104,-2	-.582,-4	.575,-3	.195,-3
29	.310,-4	-.292,-3	-.534,-3	.115,-3	-.767,-4	-.272,-3	.733,-3	-.338,-3	.807,-3	.272,-3
30	.288,-3	.139,-4	-.117,-3	-.229,-3	-.825,-4	-.351,-3	.277,-3	.282,-4	.386,-3	.119,-3
31	.210,-3	-.196,-4	.357,-3	-.154,-3	.114,-3	-.443,-3	.489,-3	.312,-3	-.368,-3	-.122,-3
32	.303,-4	-.634,-4	.651,-3	.650,-4	.367,-3	-.882,-4	.226,-3	-.653,-4	-.719,-4	-.341,-3
33	-.367,-3	.308,-3	.459,-3	.267,-3	.851,-4	.281,-3	.214,-3	-.554,-3	.216,-3	-.353,-3
34	-.716,-4	.240,-3	.266,-3	.635,-4	-.144,-3	.329,-3	.461,-3	-.776,-3	.228,-3	-.742,-4
35	.310,-3	.367,-3	.332,-3	.581,-4	-.745,-4	.102,-3	.364,-3	-.365,-3	-.122,-4	.284,-3
36	.350,-3	.377,-3	-.125,-3	.229,-3	.705,-4	.277,-4	.137,-3	-.164,-3	.102,-3	.515,-3
37	.244,-3	-.850,-4	-.132,-3	-.301,-4	.409,-3	.152,-3	.127,-3	-.109,-3	.165,-3	.589,-3
38	.777,-4	-.483,-3	.265,-3	-.303,-3	.535,-3	.189,-3	-.659,-5	.264,-3	-.181,-4	.494,-3
39	-.135,-4	-.895,-4	.328,-3	-.282,-3	.387,-3	-.904,-4	.761,-4	.249,-4	.139,-3	.461,-3
40	-.128,-3	.502,-3	-.373,-4	-.714,-5	.187,-3	-.186,-3	.312,-4	-.171,-3	-.400,-4	.569,-4
41	.142,-3	.427,-3	-.313,-3	.796,-4	.121,-4	-.977,-4	.107,-3	-.982,-4	-.511,-4	-.139,-3
42	.161,-3	.116,-3	-.589,-3	.237,-3	-.110,-3	-.839,-4	.501,-4	-.216,-3	.259,-4	.770,-4
43	-.211,-3	.825,-5	-.432,-3	.162,-3	.867,-4	-.190,-3	-.586,-5	-.237,-3	-.125,-3	.230,-4
44	-.259,-3	.196,-3	-.156,-3	.961,-4	.118,-3	-.401,-4	-.127,-3	-.261,-3	.200,-3	.186,-3
45	-.347,-3	.349,-3	.129,-4	.168,-3	.122,-3	-.330,-5	-.993,-4	-.224,-3	.683,-4	.398,-3
46	-.366,-3	.335,-3	.641,-4	-.226,-4	.135,-3	.252,-4	-.347,-4	-.112,-3	-.305,-3	.918,-4
47	.413,-4	-.766,-4	-.593,-4	-.258,-3	.119,-3	.197,-3	.697,-4	-.154,-3	.336,-4	.158,-3
48	.309,-3	-.156,-3	-.169,-3	-.100,-3	.934,-4	.234,-3	.213,-3	-.123,-3	.888,-4	.185,-3
49	.801,-4	.567,-4	-.114,-3	-.306,-4	.671,-4	.193,-3	-.925,-4	.629,-4	-.129,-3	-.354,-4
50	.291,-5	.740,-4	.422,-4	-.249,-4	-.243,-4	.667,-4	-.431,-3	.369,-4	-.388,-5	-.344,-4
51	-.387,-4	-.219,-4	.218,-3	.478,-4	.150,-3	-.175,-3	-.229,-3	-.354,-4	.686,-4	.103,-3
52	.184,-3	-.505,-4	.915,-4	.174,-4	.192,-3	-.163,-3	-.805,-4	.162,-4	.704,-4	.245,-4
53	.200,-3	-.578,-4	-.191,-3	-.126,-3	.161,-3	-.874,-4	.833,-6	-.567,-4	.107,-3	.857,-4
54	.213,-3	.128,-3	-.426,-3	-.175,-3	.110,-3	-.580,-4	-.818,-4	-.118,-3	.268,-3	.179,-3
55	.135,-3	.166,-3	-.439,-3	.133,-4	.162,-3	-.153,-3	-.492,-5	.932,-4	.230,-3	-.248,-3
56	.175,-3	-.330,-4	-.204,-3	.143,-4	.179,-3	-.761,-4	.489,-4	.159,-3	.170,-3	-.363,-3
57	.254,-3	.142,-4	-.205,-4	.360,-4	.133,-3	.628,-4	-.235,-3	-.165,-4	.429,-4	-.137,-3
58	.240,-3	.123,-3	-.843,-4	.317,-4	.673,-4	.124,-4	-.353,-3	.150,-3	-.473,-4	.111,-4
59	.328,-3	-.232,-3	-.105,-3	.177,-4	-.961,-5	.230,-4	-.100,-3	.207,-3	.107,-3	.658,-4
60	.239,-3	-.282,-4	-.126,-3	.184,-4	-.493,-4	.707,-4	.451,-5	.927,-4	.230,-3	-.423,-4

Run No. 35s; v component

Separation Distance (m.)

N	6	12	18	24	36	42	48	72	84	90
00	.224,-1	.168,-1	.170,-1	.162,-1	.214,-1	.219,-1	.208,-1	.144,-1	.198,-1	.204,-1
01	.116,-1	.903,-2	.885,-2	.834,-2	.109,-1	.115,-1	.106,-1	.760,-2	.974,-2	.106,-1
02	.260,-2	.239,-2	.150,-2	.132,-2	.193,-2	.243,-2	.177,-2	.159,-2	.997,-3	.152,-2
03	.164,-2	.967,-3	.396,-3	.724,-3	.262,-3	.103,-2	.658,-3	.550,-3	.638,-4	.154,-3
04	.106,-2	.777,-4	-.294,-3	.382,-3	-.203,-3	.100,-3	.500,-3	.184,-3	.242,-3	-.356,-3
05	.107,-2	.345,-3	-.885,-4	.137,-3	.117,-3	.223,-3	.612,-3	.342,-3	.405,-3	-.216,-3
06	.117,-2	-.125,-3	-.37 -3	.162,-3	.380,-3	.300,-3	.552,-3	.761,-3	-.549,-3	-.363,-3
07	.843,-3	.320,-4	-.854,-3	-.208,-3	.362,-3	.538,-3	.430,-3	.393,-3	-.911,-3	-.668,-3
08	.213,-3	.136,-2	-.487,-3	-.231,-3	.580,-3	.224,-3	.317,-3	-.678,-3	-.561,-3	-.877,-3
09	.605,-3	.115,-2	-.209,-5	.174,-3	.562,-3	.820,-4	.563,-3	-.106,-2	-.118,-3	-.764,-3
10	.136,-2	.472,-3	.244,-3	.756,-4	-.887,-4	.281,-3	.424,-3	-.540,-3	-.624,-4	-.563,-3
11	.144,-2	.418,-3	.884,-3	-.297,-3	-.267,-3	-.284,-3	.278,-4	-.264,-3	.189,-3	-.398,-3
12	.110,-2	.522,-3	.110,-2	-.190,-4	.439,-4	-.544,-3	-.895,-4	.127,-3	.918,-3	.528,-3
13	.612,-3	.248,-3	.118,-3	.231,-3	.127,-3	-.500,-3	-.147,-3	.375,-3	.121,-2	.130,-2
14	.550,-3	.782,-3	-.427,-3	.675,-4	.769,-4	.592,-4	.210,-3	.344,-3	.554,-3	.487,-3
15	.114,-2	.381,-3	-.857,-4	.350,-3	.134,-3	.607,-3	.358,-3	.266,-3	-.143,-3	-.931,-4
16	.116,-2	-.366,-3	.594,-4	.368,-3	-.102,-3	.147,-3	-.223,-3	-.209,-3	.128,-3	-.204,-3
17	.302,-3	.117,-3	-.781,-4	.584,-3	-.516,-3	-.577,-3	-.542,-3	-.508,-3	-.652,-4	-.304,-3
18	.447,-3	.475,-3	.273,-4	.755,-3	-.274,-3	-.386,-3	-.379,-3	-.247,-3	-.364,-3	-.515,-3
19	.221,-3	.217,-3	.285,-4	.493,-3	-.414,-5	-.359,-4	-.199,-3	-.214,-3	-.331,-3	-.697,-3
20	.463 -5	.237,-3	-.592,-4	.343,-3	.231,-3	-.353,-3	.291,-3	-.252,-3	-.150,-3	-.255,-4
21	.173,-3	.833,-4	-.722,-4	.382,-3	-.283,-4	-.230,-3	.134,-4	-.827,-3	.381,-3	-.930,-4
22	.419,-3	-.252,-3	-.539,-3	.821,-3	-.660,-3	-.233,-3	-.695,-3	-.672,-3	.392,-3	-.385,-3
23	.314,-3	-.429,-3	-.854,-3	.768,-3	-.611,-3	-.360,-3	-.680,-3	.598,-4	-.271,-4	-.416,-3
24	.449,-3	-.226,-3	-.411,-3	.266,-3	-.178,-3	.134,-3	-.747,-3	.366,-3	-.598,-4	-.458,-3
25	.320,-3	.473,-4	.413,-4	-.175,-3	.152,-3	.626,-3	-.691,-3	.421,-3	.160,-3	-.470,-3
26	.292,-4	.218,-3	-.162,-3	.502,-4	.379,-3	.451,-3	-.531,-4	.461,-3	.364,-3	-.776,-3
27	-.972,-4	.276,-3	-.833,-4	.282,-3	.391,-3	-.466,-3	.313,-3	.216,-3	.262,-3	-.448,-3
28	.123,-3	.181,-4	-.188,-4	.186,-3	-.183,-3	-.579,-3	-.160,-3	-.191,-4	-.785,-4	.158,-4
29	.167,-3	-.995,-4	-.336,-3	.161,-3	-.324,-3	-.170,-3	-.328,-3	.324,-4	-.201,-3	.252,-3
30	-.424,-3	.106,-3	-.469,-3	-.323,-4	-.164,-3	-.146,-3	.693,-4	-.306,-3	-.291,-4	.959,-4
31	-.429,-3	.104,-3	-.392,-3	.145,-3	.508,-4	.479,-4	.307,-3	-.543,-3	.702,-5	-.215,-3
32	-.201,-3	-.101,-3	-.196,-3	.298,-3	-.614,-4	-.127,-3	.112,-3	-.483,-3	.162,-3	-.319,-3
33	-.159,-3	-.167,-3	.113,-4	.394,-4	.257,-5	-.112,-3	-.181,-3	-.758,-4	.233,-3	.426,-4
34	.253,-4	-.431,-3	-.681,-4	-.897,-4	.230,-3	.599,-3	-.243,-3	-.553,-4	.130,-3	.763,-5
35	.297,-3	-.267,-3	.221,-3	-.131,-3	.242,-3	.615,-3	-.166,-4	-.475,-3	.151,-3	-.444,-3
36	.312,-3	-.106,-3	.472,-3	-.549,-3	.271,-3	-.254,-4	-.458,-4	-.388,-3	-.841,-5	-.269,-3
37	.795,-4	-.120,-3	.354,-3	-.451,-3	.213,-3	-.196,-3	-.496,-3	.256,-3	.106,-3	.167,-3
38	.153,-3	-.384,-5	.217,-3	-.933,-4	.663,-4	-.143,-3	-.157,-3	.353,-3	-.568,-4	.113,-4
39	.558,-3	-.157,-3	-.136,-3	.591,-4	.061,-4	.635,-4	.180,-3	.379,-3	-.505,-3	-.355,-3
40	.439,-3	-.113,-3	-.310,-3	.119,-4	-.137,-3	-.677,-4	.121,-3	.299,-3	-.469,-3	-.376,-3
41	-.174,-4	.226,-3	-.356,-3	-.391,-4	-.249,-3	.567,-4	.659,-4	.958,-4	-.164,-3	-.349,-3
42	-.580,-4	-.153,-3	.946,-4	-.161,-3	.158,-3	.398,-3	.613,-4	.660,-4	-.276,-3	-.419,-3
43	-.466,-4	-.184,-3	.395,-3	-.103,-3	.336,-3	-.155,-4	-.515,-4	.738,-4	-.323,-3	-.423,-3
44	-.120,-3	-.171,-3	.330,-3	.106,-3	.122,-3	-.242,-3	-.154,-3	.147,-3	-.965,-4	-.939,-4
45	-.124,-3	-.189,-3	-.735,-4	.162,-3	.437,-4	-.272,-3	-.213,-4	.220,-3	-.268,-4	.130,-3
46	-.166,-3	-.151,-3	.101,-4	.803,-4	.214,-3	-.168,-3	.160,-3	-.122,-3	.102,-3	.638,-4
47	-.271,-4	-.344,-3	.153,-3	.210,-3	.150,-3	-.221,-3	.517,-4	-.317,-4	.645,-4	-.679,-4
48	.134,-3	-.611.-3	-.321,-3	.961,-4	.985,-4	-.620,-3	-.105,-3	.113,-3	.618,-4	.394,-4
49	.162,-3	-.378,-3	-.387,-3	-.390,-4	.179,-3	-.498,-3	-.971,-5	-.255,-3	.837,-4	-.928,-4
50	.328,-3	-.193,-3	-.417,-3	-.107,-3	.904,-4	.290,-4	.184,-3	-.423,-3	.132,-3	.155,-3
51	.466,-3	-.172,-3	-.273,-3	-.127,-3	-.486,-4	.436,-3	.163,-3	-.177,-3	.174,-3	.596,-3
52	.261,-3	-.101,-3	.787,-5	.543,-4	-.295,-3	.208,-3	-.724,-5	.156,-3	-.114,-3	.441,-3
53	-.881,-4	-.208,-3	.275,-3	.660,-4	-.477,-3	.140,-3	-.166,-3	.218,-3	-.304,-4	.592,-5
54	-.164,-4	-.110,-3	.122,-3	-.147,-3	-.115,-3	.934,-4	-.287,-3	.152,-3	.110,-3	-.607,-4
55	-.187,-3	.789,-4	-.551,-4	-.175,-3	.560,-4	-.158,-3	-.145,-3	.134,-3	.853,-4	-.212,-3
56	-.714,-4	.131,-3	.933,-5	-.537,-4	.694,-4	-.576,-4	-.702,-5	.225,-3	.891,-5	-.163,-3
57	.288,-3	-.130,-3	.119,-3	.190,-4	-.116,-4	.129,-3	.168,-3	.165,-3	.216,-3	.246,-4
58	.359,-3	-.146,-3	-.350,-4	-.129,-3	.106,-3	-.108,-3	.374,-4	-.179,-3	.309,-3	.540,-4
59	.204,-3	-.630,-4	-.177,-3	-.991,-4	.937,-4	-.493,-4	-.585,-4	-.187,-3	.295,-3	.198,-3
60	.381,-4	-.176,-4	-.155,-3	.213,-4	.193,-4	.804,-4	-.806,-4	-.890,-5	.212,-3	.241,-3

Run No. 39 ; u component

Separation Distance (m.)

N	6	12	18	24	36	42	48	72	84	90
00	.178	.154	.191	.189	.176	.2[illegible]	.208	.192	.181	.209
01	.809,-1	.744,-1	.875,-1	.857,-1	.793,-1	.930,-1	.929,-1	.862,-1	.808,-1	.931,-1
02	.290,-2	.296,-2	.471,-2	.417,-2	.220,-2	.321,-2	.419,-2	.356,-2	.260,-2	.343,-2
03	-.732,-3	-.610,-4	.709,-3	.866,-3	.207,-3	-.410,-3	.189,-2	.868,-3	.283,-3	.573,-3
04	-.140,-4	-.274,-4	.379,-4	.771,-4	.573,-3	-.219,-3	.823,-3	.33[illegible],-3	-.377,-3	-.227,-3
05	.597,-3	.775,-4	.954,-5	.435,-4	.796,-3	.243,-3	-.250,-3	.386,-3	-.880,-3	-.563,-3
06	.447,-3	.272,-3	.408,-3	.315,-3	.320,-3	-.276,-3	-.674,-3	-.110,-3	-.603,-3	-.834,-3
07	.271,-3	.889,-5	.439,-4	.461,-4	-.105,-3	-.114,-3	-.138,-3	.535,-4	.786,-4	.664,-3
08	-.636,-3	-.204,-3	-.237,-3	.132,-3	-.373,-3	.110,-2	.338,-3	-.242,-4	-.369,-3	.160,-2
09	-.984,-3	.314,-4	-.432,-3	.216,-3	-.281,-3	.108,-2	.624,-3	-.262,-4	-.435,-3	.117,-2
10	-.514,-3	.349,-3	-.327,-3	-.350,-4	.698,-4	.311,-3	.133,-3	.126,-3	.434,-3	.384,-3
11	-.210,-3	.120,-3	.197,-3	-.310,-3	-.110,-3	.311,-3	-.552,-3	.325,-3	.732,-3	.321,-3
12	.282,-3	-.433,-4	.188,-3	-.448,-3	-.304,-3	.268,-3	-.456,-3	.157,-3	.736,-3	.509,-3
13	.327,-3	-.703,-4	-.[illegible],-3	.855,-4	-.265,-3	.[illegible],-3	-.283,-3	.399,-3	.612,-3	.409,-3
14	-.301,-3	.295,-4	-.604,-3	.177,-3	-.485,-4	.514,-3	-.305,-3	.492,-3	.524,-4	-.180,-3
15	-.209,-3	.233,-3	-.555,-3	.772,-4	.334,-3	.315,-3	.111,-3	-.145,-4	-.443,-3	-.116,-3
16	-.126,-3	.387,-3	-.360,-3	-.188,-3	.486,-4	.914,-4	.360,-3	-.340,-3	-.590,-3	.177,-3
17	-.181,-3	.401,-3	-.185,-3	-.277,-3	-.304,-3	-.208,-3	.357,-3	-.313,-3	-.241,-3	.416,-3
18	-.349,-5	.138,-3	-.203,-3	-.114,-3	-.263,-3	-.149,-3	.234,-3	-.669,-4	.124,-5	.335,-3
19	.201,-3	-.487,-4	.102,-4	-.152,-3	-.124,-3	-.529,-4	.292,-3	.209,-3	-.995,-5	.189,-4
20	.186,-3	-.142,-3	.398,-4	-.112,-3	-.314,-3	-.198,-3	.375,-3	.241,-3	-.283,-3	-.911,-4
21	.113,-3	-.229,-3	-.247,-3	-.198,-3	-.274,-3	.264,-3	.125,-3	.161,-3	-.198,-3	-.134,-3
22	.986,-4	.255,-4	-.389,-3	-.422,-3	-.223,-4	.625,-3	-.217,-3	.185,-3	-.783,-4	-.197,-3
23	.313,-4	.168,-3	-.138,-3	-.168,-3	-.128,-3	.569,-3	-.442,-4	.155,-3	-.861,-4	-.209,-3
24	-.735,-5	.156,-3	.205,-3	.275,-3	.243,-4	.422,-3	.163,-3	.121,-3	-.575,-4	-.610,-4
25	-.117,-4	.173,-3	.351,-3	.207,-3	.326,-4	.174,-3	.209,-4	.175,-3	.190,-5	.662,-4
26	-.113,-5	.373,-4	.150,-3	-.544,-4	.144,-5	-.993,-4	-.800,-4	.103,-3	.119,-3	.344,-4
27	.112,-3	-.185,-3	.374,-4	-.248,-4	-.329,-4	-.119,-3	-.434,-4	.185,-3	.226,-3	.131,-3
28	.223,-3	-.279,-3	.645,-5	.109,-3	.854,-5	-.478,-4	.328,-4	.174,-3	.143,-3	.111,-3
29	.150,-3	-.614,-4	.132,-3	.114,-3	.207,-4	.939,-5	.119,-4	-.539,-4	.141,-3	.516,-4
30	.656,-4	.542,-4	.101,-3	.435,-4	-.514,-5	.493,-5	-.271,-4	-.932,-4	.109,-3	-.164,-3
31	.214,-5	.142,-4	.153,-4	.524,-4	.183,-4	-.239,-4	.340,-4	-.678,-4	.591,-4	-.225,-3
32	-.133,-3	.326,-5	.250,-4	-.118,-4	-.534,-4	.219,-6	.176,-4	-.613,-4	.456,-4	-.156,-3
33	-.106,-3	.311,-4	.160,-3	-.177,-4	-.526,-4	.402,-5	-.638,-5	-.722,-5	.530,-4	-.109,-3
34	-.120,-3	.328,-4	.153,-3	-.116,-4	.598,-4	-.258,-4	.134,-5	.462,-4	-.120,-3	.963,-4
35	-.168,-3	.110,-3	.763,-4	-.707,-4	-.373,-4	-.792,-4	-.268,-4	-.323,-4	-.280,-3	.226,-3
36	-.118,-3	.227,-3	-.169,-4	-.101,-3	-.169,-3	-.673,-4	-.761,-4	-.144,-3	-.223,-3	.212,-3
37	-.907,-5	.170,-3	-.545,-4	-.631,-4	-.253,-3	-.350,-4	-.676,-4	-.535,-4	-.762,-4	.158,-3
38	.374,-4	.268,-4	-.645,-4	-.862,-5	-.167,-3	.437,-5	-.127,-4	.316,-5	-.581,-4	.863,-4
39	-.631,-4	-.199,-4	-.[illegible],-4	-.628,-4	-.108,-3	.689,-4	.582,-4	.525,-4	-.497,-4	.710,-4
40	-.115,-3	-.422,-4	-.914,-4	-.107,-3	-.103,-3	-.811,-4	.445,-4	.876,-4	.128,-4	.740,-4
41	-.144,-3	-.692,-5	-.222,-5	-.489,-4	-.325,-4	-.190,-3	.621,-4	-.589,-4	-.849,-5	.477,-4
42	-.727,-4	.252,-4	.783,-4	-.116,-3	.133,-4	-.644,-4	.112,-3	-.175,-3	-.329,-4	-.366,-4
43	-.760,-4	-.142,-4	.170,-3	-.824,-4	.218,-4	-.191,-4	.586,-5	-.769,-4	.121,-4	-.135,-4
44	-.142,-3	-.614,-4	.225,-3	.282,-4	.310,-4	-.111,-3	-.914,-5	-.179,-4	.674,-4	-.638,-4
45	-.833,-4	-.267,-4	.658,-4	.708,-4	.713,-4	-.716,-4	.751,-4	-.352,-4	.168,-3	-.780,-4
46	-.207,-4	-.121,-4	-.108,-3	.844,-4	.983,-4	-.137,-4	.112,-3	.991,-5	.168,-3	-.382,-4
47	.281,-4	-.305,-4	-.294,-4	.158,-3	.602,-4	-.300,-5	.131,-3	.989,-4	.434,-4	-.221,-5
48	.281,-4	-.280,-5	-.286,-4	.882,-4	-.159,-4	.259,-4	.777,-4	.842,-4	-.697,-4	.941,-4
49	.494,-4	-.853,-5	-.989,-4	.238,-4	-.337,-5	.334,-4	-.222,-4	-.104,-4	-.936,-4	.120,-3
50	.609,-4	.807,-5	-.630,-4	.190,-4	.116,-3	-.412,-4	-.987,-4	-.490,-6	-.105,-3	.639,-4
51	.204,-4	.486,-4	-.527,-5	.390,-4	.152,-3	-.692,-5	-.632,-4	.438,-4	-.628,-4	.475,-4
52	.294,-4	.100,-4	.125,-4	.408,-4	.574,-4	.355,-4	-.107,-4	.326,-4	-.758,-4	.251,-4
53	-.310,-4	-.219,-4	.700,-4	.506,-4	.199,-4	.706,-4	.177,-4	.102,-4	-.208,-4	.307,-4
54	-.868,-4	-.492,-4	.794,-4	.377,-4	-.304,-4	.685,-4	-.152,-4	-.318,-4	.293,-4	.748,-4
55	-.914,-4	.361,-5	.819,-5	.905,-5	.973,-5	.214,-4	-.420,-4	-.838,-4	-.413,-4	.102,-3
56	-.448,-4	-.245,-4	.555,-6	-.291,-4	.143,-4	.155,-4	.408,-5	-.494,-4	-.418,-4	.584,-4
57	.566,-5	-.183,-4	.470,-4	-.500,-4	-.552,-4	.586,-4	.502,-4	-.975,-5	.331,-4	.134,-4
58	-.239,-4	.452,-4	-.309,-5	-.634,-4	-.347,-4	.733,-4	-.599,-5	.400,-4	.277,-4	.326,-4
59	-.819,-4	.148,-4	-.325,-4	-.440,-4	.318,-4	.444,-4	-.416,-5	.479,-4	-.216,-4	.276,-4
60	-.732,-4	-.581,-5	-.366,-4	-.304,-4	.472,-4	.129,-4	.172,-4	.116,-5	-.462,-4	.728,-4

Run No. 39 : v component

	Separation Distance (m.)									
N	6	12	18	24	36	42	48	72	84	90
00	.647,-1	.722,-1	.772,-1	.687,-1	.572,-1	.611,-1	.468,-1	.581,-1	.484,-1	.515,-1
01	.287,-1	.322,-1	.341,-1	.305,-1	.255,-1	.270,-1	.209,-1	.256,-1	.213,-1	.224,-1
02	.965,-3	.950,-3	.852,-3	.830,-3	.738,-3	.747,-3	.590,-3	.491,-3	.392,-3	.377,-3
03	.390,-3	.266,-3	.231,-3	.112,-3	-.758,-5	.325,-3	-.348,-3	-.233,-3	.950,-4	.168,-3
04	.190,-3	.208,-3	.170,-3	.121,-3	-.110,-3	.126,-3	-.393,-3	.521,-4	.210,-4	.472,-4
05	.112,-3	.217,-3	-.726,-5	.448,-4	-.116,-3	-.279,-4	-.172,-3	.785,-4	-.151,-3	-.162,-3
06	.167,-3	.189,-3	.110,-3	-.258,-4	-.108,-3	-.312,-3	.260,-4	-.331,-4	-.152,-3	-.189,-3
07	.135,-3	.286,-4	.225,-3	.387,-4	-.259,-4	-.288,-3	-.586,-4	-.193,-3	-.586,-4	-.127,-3
08	.540,-4	-.687,-4	-.360,-4	.138,-3	-.341,-4	-.192,-3	-.113,-3	-.157,-3	-.419,-4	.644,-4
09	.551,-4	-.283,-5	-.318,-4	-.768,-4	-.699,-4	-.197,-3	-.223,-4	-.125,-3	-.673,-4	.104,-3
10	.101,-3	-.140,-4	.751,-4	-.199,-3	-.120,-3	-.280,-3	.143,-4	-.493,-4	.174,-4	.628,-4
11	.101,-3	-.684,-4	-.538,-4	-.825,-4	-.976,-4	-.282,-3	.744,-4	.241,-4	.602,-4	.616,-4
12	.810,-4	-.116,-3	-.321,-3	-.496,-4	.135,-4	-.408,-4	.724,-4	.330,-5	.213,-4	.792,-4
13	.317,-4	-.218,-4	-.249,-3	-.228,-4	.113,-3	.514,-4	-.478,-4	.652,-4	.468,-4	-.251,-5
14	.323,-4	.146,-4	-.583,-4	-.679,-4	.113,-3	.595,-4	-.561,-4	.106,-3	.137,-4	.205,-4
15	.415,-4	-.529,-4	-.194,-4	-.836,-4	.750,-4	.671,-4	.294,-4	.627,-4	-.224,-4	.964,-5
16	-.163,-4	-.155,-3	-.869,-4	-.303,-4	.917,-5	.180,-4	-.761,-4	.613,-4	-.226,-4	.311,-4
17	.670,-4	-.118,-3	-.128,-3	.228,-4	-.525,-4	-.134,-4	-.535,-4	-.122,-3	-.148,-4	.720,-4
18	.536,-4	-.621,-4	-.659,-4	.472,-4	-.659,-4	.197,-5	-.869,-4	-.157,-3	-.738,-4	-.861,-4
19	-.893,-5	-.771,-5	.665,-4	.784,-4	.662,-4	.921,-4	-.513,-4	.967,-4	-.664,-4	-.655,-4
20	.313,-4	.174,-4	.132,-3	.156,-3	.129,-3	.159,-3	.548,-4	.504,-4	.563,-5	.809,-4
21	.141,-3	-.121,-4	.598,-4	.127,-3	.779,-4	.136,-3	.162,-3	-.409,-4	.362,-4	.194,-3
22	.274,-4	.493,-4	.138,-4	-.539,-4	-.109,-3	.647,-4	.150,-3	-.166,-4	.104,-4	.196,-3
23	-.754,-4	.840,-4	.118,-4	-.149,-3	-.227,-3	.126,-4	.624,-4	.437,-4	.420,-5	.674,-4
24	-.674,-4	.360,-5	.475,-4	-.193,-4	-.133,-3	.178,-4	-.472,-5	.103,-5	-.166,-3	-.246,-4
25	-.107,-4	.147,-4	.378,-4	.344,-4	-.970,-4	.517,-4	-.301,-4	.239,-6	-.279,-3	-.333,-4
26	.110,-3	.298,-4	.423,-4	-.504,-4	-.869,-4	.217,-4	-.565,-4	.336,-4	-.113,-3	-.338,-4
27	.918,-4	.411,-4	.116,-3	-.333,-4	-.933,-4	.186,-4	.213,-6	.105,-3	-.645,-4	-.103,-4
28	-.800,-6	-.274,-4	.106,-3	.446,-4	- 772,-4	.107,-3	.622,-4	.831,-4	.915,-5	-.218,-4
29	-.172,-5	-.494,-4	.369,-4	.811,-4	-.112,-4	.844,-4	.584,-4	.396,-4	-.154,-4	-.215,-4
30	-.865,-5	-.436,-4	-.113,-4	-.190,-4	.469,-4	.518,-4	-.173,-4	.263,-4	-.400,-4	-.762,-4
31	-.203,-4	-.490,-4	-.133,-4	-.467,-4	.127,-4	.749,-4	-.198,-4	-.497,-4	.100,-4	-.153,-4
32	.957,-4	-.533,-4	-.282,-4	-.435,-4	.149,-4	.854,-4	.123,-4	-.857,-4	.142,-4	.520,-4
33	.114,-3	-.513,-4	.145,-4	.758,-5	-.306,-4	.483,-4	.549,-4	-.128,-4	-.377,-5	.869,-4
34	.404,-4	-.278,-4	.408,-4	.663,-4	-.492,-4	.304,-5	.129,-3	.623,-4	-.117,-3	.395,-4
35	.689,-4	.197,-4	.100,-4	.462,-4	-.162,-4	-.104,-4	.126,-3	.492,-4	-.972,-4	-.214,-4
36	.296,-4	.345,-4	-.109,-4	-.184,-4	-.759,-5	-.333,-4	.344,-4	-.668,-5	.356,-4	-.853,-4
37	-.159,-4	.127,-4	-.247,-4	-.661,-4	-.388,-5	-.936,-4	-.623,-5	-.208,-4	.816,-4	-.793,-4
38	.265,-4	.837,-5	-.392,-4	-.566,-4	-.439,-4	-.175,-3	-.373,-4	-.178,-4	.448,-4	-.213,-4
39	.620,-4	.117,-4	-.117,-4	-.601,-4	-.634,-4	-.141,-3	.861,-5	.577,-4	.450,-4	-.823,-4
40	.106,-3	.344,-4	.731,-4	-.324,-4	-.878,-4	-.985,-4	.371,-4	.304,-4	.307,-4	-.669,-4
41	-.454,-5	.125,-3	.109,-3	.558,-4	-.294,-4	-.670,-4	-.527,-5	-.101,-5	.689,-5	.457,-4
42	-.257,-4	.703,-4	.118,-3	.450,-4	.380,-4	-.903,-4	-.232,-4	.465,-4	-.490,-5	.969,-4
43	.200,-4	-.389,-4	.129,-3	-.451,-4	.409,-4	-.113,-3	.820,-5	.661,-4	-.134,-4	.408,-4
44	-.248,-5	-.355,-4	.942,-4	-.146,-4	.936,-4	-.513,-4	.354,-4	.348,-4	-.300,-4	.111,-4
45	.109,-4	-.969,-5	-.228,-4	.450,-4	.464,-4	.173,-4	.168,-5	.445,-4	-.664,-4	-.477,-4
46	.114,-5	-.432,-4	-.676,-4	.672,-4	.121,-4	.247,-4	-.414,-4	.770,-4	-.112,-3	-.980,-4
47	.851,-7	-.548,-4	-.709,-4	.776,-4	.910,-5	-.751,-4	-.653,-4	.394,-4	-.720,-4	.497,-4
48	-.575,-4	-.564,-4	-.220,-4	.458,-4	.376,-5	-.792,-4	-.355,-4	.453,-4	-.414,-4	.136,-3
49	-.631,-4	-.442,-4	.481,-4	.306,-4	-.255,-4	-.202,-4	.202,-4	.887,-4	-.348,-4	.311,-4
50	.325,-4	-.150,-4	.177,-4	.136,-4	-.150,-4	-.152,-4	.762,-6	.603,-4	.152,-4	-.604,-4
51	.347,-4	-.582,-5	-.149,-4	.177,-7	-.316,-5	.552,-4	-.188,-5	-.595,-5	.285,-4	-.440,-4
52	.142,-4	.437,-5	-.883,-6	.236,-4	.454,-4	.117,-3	.126,-4	-.104,-4	.161,-4	-.666,-5
53	-.265,-4	.346,-4	-.227,-4	.132,-4	.284,-4	.543,-4	.149,-4	-.144,-4	.149,-4	.511,-4
54	-.557,-4	.230,-4	-.190,-4	.125,-4	.740,-5	.646,-4	.649,-5	-.111,-4	.625,-4	-.241,-4
55	-.576,-4	.317,-4	.109,-4	.271,-4	.503,-5	.672,-4	-.581,-4	.659,-5	.373,-4	-.101,-3
56	.559,-4	.211,-4	-.180,-4	.282,-4	-.572,-5	.226,-7	-.711,-4	.236,-4	.985,-5	-.633,-4
57	.733,-4	-.250,-4	.337,-4	.387,-4	-.143,-4	.994,-5	-.309,-4	.221,-4	.353,-4	-.772,-4
58	-.561,-5	-.963,-6	.186,-4	.223,-4	-.420,-5	-.378,-4	.293,-4	-.260,-4	.464,-4	-.523,-4
59	-.351,-4	.124,-4	.209,-4	-.132,-5	.534,-4	-.617,-4	.756,-4	-.640,-4	-.792,-5	-.445,-4
60	-.335,-4	.869,-5	.343,-4	-.706,-6	.744,-4	-.244,-4	.685,-4	-.485,-4	-.303,-4	-.317,-4

Run No. 43 ; u component

	Separation Distance (m.)									
N	6	12	18	24	36	42	48	72	84	90
00	.373	.331	.361	.373	.350	.389	.356	.289	.281	.331
01	.315	.266	.287	.300	.283	.310	.278	.207	.202	.227
02	.175	.128	.135	.144	.141	.150	.115	.562,-1	.528,-1	.518,-1
03	.878,-1	.603,-1	.560,-1	.591,-1	.504,-1	.443,-1	.217,-1	-.757,-2	-.647,-2	-.865,-2
04	.579,-1	.416,-1	.321,-1	.288,-1	.908,-2	-.127,-2	.852,-3	-.152,-1	-.174,-1	-.210,-1
05	.387,-1	.285,-1	.180,-1	.115,-1	-.604,-2	-.120,-1	-.281,-2	-.129,-1	-.942,-2	-.128,-1
06	.207,-1	.138,-1	.679,-2	.468,-2	-.226,-2	-.405,-2	-.144,-1	-.103,-1	.172,-2	-.134,-1
07	.113,-1	.615,-2	.299,-2	.174,-2	-.565,-2	-.398,-2	-.172,-1	-.863,-2	.128,-2	.413,-3
08	.913,-2	.532,-2	.260,-2	-.383,-2	-.145,-1	-.880,-2	-.147,-1	-.282,-3	-.121,-2	-.356,-3
09	.939,-2	.577,-2	.121,-2	-.882,-2	-.126,-1	-.576,-2	-.774,-2	.972,-2	.512,-2	-.583,-3
10	.117,-1	.354,-2	-.121,-2	-.725,-2	-.743,-2	-.216,-2	.313,-3	.645,-2	.549,-3	-.570,-3
11	.106,-1	.244,-2	-.319,-2	-.442,-2	-.576,-2	-.177,-2	.332,-3	.324,-2	.121,-2	.252,-3
12	.659,-2	.270,-2	-.434,-2	-.434,-2	-.829,-3	-.299,-3	-.179,-2	.178,-2	.723,-3	-.657,-3
13	.567,-2	.176,-2	-.330,-2	-.224,-2	.775,-3	-.663,-3	.227,-2	.248,-2	.155,-2	-.123,-3
14	.430,-2	.330,-3	-.298,-2	-.632,-3	.181,-2	.242,-2	.561,-2	.245,-2	.140,-2	-.995,-5
15	.389,-2	-.643,-3	-.196,-2	-.126,-2	.312,-2	.524,-2	.403,-2	.141,-2	.641,-3	-.311,-4
16	.638,-2	-.101,-2	-.804,-3	-.408,-3	-.248,-3	.114,-2	-.173,-2	.344,-3	-.457,-3	-.752,-3
17	.635,-2	-.165,-2	-.216,-2	.429,-4	-.191,-2	-.325,-2	-.556,-2	-.116,-2	.463,-3	.737,-3
18	.353,-2	-.160,-2	-.168,-2	-.132,-2	-.105,-2	-.142,-2	-.299,-2	-.230,-2	.683,-3	.121,-2
19	.135,-2	-.108,-2	.717,-3	-.975,-3	-.671,-4	.141,-2	-.137,-2	-.132,-2	-.107,-3	-.628,-3
20	.130,-2	-.214,-2	-.111,-2	-.815,-3	.997,-3	.140,-2	-.318,-2	.117,-2	-.101,-2	-.836,-3
21	.268,-2	-.327,-2	-.326,-2	-.981,-3	.216,-2	.794,-3	-.386,-2	.692,-3	-.311,-3	-.386,-3
22	.205,-2	-.301,-2	-.241,-2	-.563,-3	.584,-3	.500,-3	-.199,-2	.111,-3	.122,-2	.327,-3
23	.127,-2	-.281,-2	-.646,-3	.331,-3	-.198,-2	-.139,-2	-.140,-2	.447,-3	.329,-3	.452,-3
24	.315,-3	-.198,-2	-.781,-3	.723,-5	-.602,-3	-.136,-2	-.739,-3	-.107,-2	-.400,-3	.532,-3
25	.152,-3	-.167,-2	-.152,-2	.137,-2	-.352,-4	-.717,-3	-.438,-3	-.114,-2	.832,-3	-.357,-3
26	.161,-2	-.234,-2	-.207,-2	.175,-2	-.408,-3	-.786,-3	.503,-3	-.380,-3	.124,-2	-.420,-3
27	.183,-2	-.132,-2	-.186,-2	.804,-4	-.232,-3	-.193,-3	.970,-3	-.821,-3	-.394,-4	.561,-3
28	.124,-2	-.229,-3	-.239,-3	.202,-3	-.873,-3	.116,-2	.714,-3	-.149,-2	-.526,-3	.522,-3
29	.124,-2	-.786,-3	.395,-3	.596,-3	-.654,-3	.167,-2	-.528,-3	-.183,-2	-.600,-4	.605,-3
30	.103,-2	-.117,-2	.387,-3	.947,-3	.886,-4	.111,-2	-.121,-2	-.129,-2	.428,-3	.933,-3
31	.460,-3	-.143,-2	.646,-3	.877,-3	-.315,-4	.112,-3	-.490,-3	-.317,-3	.670,-3	.682,-3
32	.711,-4	-.180,-2	.899,-3	.532,-4	-.729,-3	-.492,-3	.649,-3	-.468,-5	.431,-3	-.142,-2
33	.170,-4	-.171,-2	.992,-3	.501,-3	-.964,-3	.733,-3	.154,-3	-.442,-3	.147,-3	-.109,-2
34	-.203,-3	-.105,-2	.554,-3	.134,-2	-.941,-3	.376,-3	-.110,-2	-.116,-2	-.372,-3	.932,-4
35	-.739,-3	-.130,-2	.101,-2	.132,-2	-.105,-2	.906,-3	-.105,-2	-.130,-2	-.115,-4	-.134,-3
36	-.656,-3	-.870,-3	.113,-2	.136,-2	-.623,-3	.704,-3	-.133,-2	-.728,-3	.356,-3	.249,-3
37	-.429,-3	-.398,-3	.716,-3	.143,-2	-.393,-3	.260,-3	-.823,-3	-.700,-3	.153,-4	.236,-3
38	-.264,-3	-.481,-3	.104,-2	.103,-2	-.617,-3	.194,-3	-.697,-3	-.485,-3	-.103,-3	.154,-3
39	.256,-3	-.394,-3	.671,-3	.494,-3	.373,-4	-.358,-3	-.117,-3	-.174,-3	-.938,-4	.506,-3
40	.531,-3	-.519,-3	-.145,-3	.214,-3	-.870,-5	-.101,-2	-.382,-3	.241,-3	-.140,-3	.724,-3
41	.342,-3	-.363,-3	-.537,-3	.162,-3	-.305,-4	-.791,-3	-.195,-3	.581,-3	-.289,-3	.323,-3
42	-.947,-4	.107,-3	-.884,-3	.203,-3	-.144,-4	-.217,-3	.367,-3	.122,-4	-.274,-3	-.144,-4
43	-.393,-3	.324,-3	-.730,-3	.169,-3	.115,-3	.363,-4	.765,-3	.249,-3	.187,-4	-.150,-3
44	-.487,-3	.293,-3	-.226,-3	.113,-3	-.293,-3	.356,-3	-.189,-3	.140,-3	.338,-3	-.758,-3
45	-.722,-3	-.346,-4	.349,-3	.396,-3	-.690,-3	.262,-3	-.268,-3	-.129,-3	.637,-4	-.571,-3
46	-.763,-3	-.220,-3	.353,-3	.518,-3	-.290,-3	.218,-3	.272,-3	.214,-3	-.431,-3	-.745,-6
47	-.711,-3	-.414,-3	.223,-3	.427,-3	.192,-3	.218,-3	.681,-3	.240,-3	-.422,-4	.413,-3
48	-.761,-3	-.411,-3	-.468,-4	.231,-3	.161,-3	-.519,-4	.389,-3	.405,-3	.535,-3	-.120,-3
49	-.494,-3	-.115,-3	-.454,-3	.661,-4	-.336,-3	.243,-4	.127,-3	.168,-3	.517,-3	-.768,-3
50	-.286,-3	.302,-4	-.321,-3	.425,-4	-.695,-3	.685,-4	-.356,-3	-.104,-3	.612,-3	-.261,-3
51	-.324,-3	-.357,-4	-.109,-3	.168,-3	-.563,-3	.598,-4	-.509,-3	-.573,-4	.508,-3	.624,-3
52	-.754,-3	.614,-4	.141,-3	.100,-3	-.365,-3	-.605,-4	-.746,-3	-.293,-3	-.233,-3	.898,-3
53	-.589,-3	-.862,-4	-.483,-4	-.359,-5	.711,-4	-.325,-3	-.685,-3	-.244,-3	-.323,-3	.395,-3
54	-.256,-3	-.155,-3	-.326,-3	.270,-3	-.640,-4	-.216,-3	-.578,-3	.245,-3	.827,-5	-.353,-3
55	.171,-4	.125,-4	-.654,-4	.333,-3	-.202,-3	.126,-3	-.382,-3	.464,-3	-.295,-4	-.344,-3
56	-.119,-3	.904,-4	.103,-3	.116,-3	.116,-3	-.120,-3	.219,-3	.180,-3	-.122,-3	.349,-3
57	-.464,-3	.354,-6	.311,-3	-.623,-4	-.106,-3	.212,-3	.715,-3	.233,-3	-.154,-3	.650,-3
58	-.757,-3	-.310,-3	.609,-3	.231,-3	-.498,-3	.874,-3	.400,-3	.655,-3	-.226,-3	.226,-3
59	-.927,-3	-.401,-3	.970,-3	.293,-3	-.454,-3	.122,-2	-.898,-5	.474,-3	-.514,-4	.380,-3
60	-.766,-3	-.289,-3	.737,-3	.157,-3	-.216,-3	.989,-3	-.137,-3	.195,-3	.138,-4	.514,-3

Run No. 43 ; v component

N	Separation Distance (m.)									
	6	12	18	24	36	42	48	72	84	90
00	.532	.497	.560	.626	.584	.654	.714	.584	.543	.599
01	.355	.332	.374	.416	.374	.420	.451	.351	.314	.344
02	.142	.135	.149	.160	.122	.135	.144	.791,-1	.519,-1	.538,-1
03	.585,-1	.580,-1	.604,-1	.640,-1	.416,-1	.437,-1	.401,-1	.373,-2	-.613,-2	-.663,-2
04	.408,-1	.341,-1	.342,-1	.274,-1	.175,-1	.153,-1	.713,-2	-.938,-2	-.771,-2	-.937,-2
05	.385,-1	.282,-1	.269,-1	.125,-1	.365,-3	-.460,-2	-.920,-2	-.102,-1	.336,-4	-.121,-2
06	.291,-1	.224,-1	.189,-1	.676,-2	-.752,-2	-.128,-1	-.179,-1	-.311,-2	.941,-2	.971,-2
07	.178,-1	.120,-1	.100,-1	.853,-3	-.675,-2	-.103,-1	-.115,-1	.389,-2	.918,-2	.847,-2
08	.153,-1	.610,-2	.420,-2	-.124,-2	-.743,-2	-.111,-1	-.475,-2	.761,-3	.262,-2	.215,-3
09	.127,-1	.231,-2	.672,-3	-.249,-2	-.762,-2	-.104,-1	-.210,-2	-.849,-3	.371,-3	-.226,-2
10	.688,-2	-.471,-3	.224,-3	-.272,-2	-.398,-2	-.461,-2	-.513,-3	.756,-3	.116,-2	-.380,-4
11	.590,-2	-.294,-4	-.214,-3	-.322,-2	-.412,-2	-.109,-2	.180,-2	.908,-3	.779,-3	.221,-3
12	.637,-2	.309,-3	-.563,-3	-.323,-2	-.527,-2	-.417,-3	.181,-2	-.226,-3	.102,-2	.266,-2
13	.527,-2	.141,-2	-.816,-3	-.217,-2	-.192,-2	.200,-2	.252,-2	-.132,-2	.981,-3	.210,-2
14	.368,-2	.111,-2	-.165,-2	-.347,-2	.530,-3	.214,-2	.614,-3	-.572,-3	-.168,-2	-.115,-2
15	.253,-2	-.216,-3	-.199,-2	-.281,-2	-.515,-3	-.511,-3	.532,-3	-.992,-4	-.136,-2	-.140,-2
16	.228,-2	-.697,-3	-.140,-2	-.105,-2	-.104,-2	-.163,-2	.143,-2	-.656,-3	-.873,-3	-.122,-2
17	.316,-2	-.103,-2	-.113,-2	-.354,-3	-.120,-3	-.172,-2	.484,-3	-.539,-3	-.978,-3	-.177,-2
18	.322,-2	-.211,-2	-.171,-2	-.110,-2	.169,-2	-.357,-3	.742,-3	-.396,-3	.538,-3	-.143,-2
19	.291,-2	-.194,-2	-.147,-2	-.196,-2	.282,-2	.122,-2	.125,-2	-.331,-3	.148,-2	.186,-3
20	.173,-2	-.163,-2	-.614,-3	-.233,-2	.153,-2	.237,-3	.550,-3	-.334,-3	.719,-3	.157,-2
21	.147,-2	-.184,-2	-.146,-2	-.190,-2	.724,-3	-.205,-3	-.512,-3	.506,-3	-.397,-3	.162,-2
22	.155,-2	-.133,-2	-.153,-2	.418,-3	.701,-3	.529,-4	-.294,-3	.815,-3	-.901,-3	.545,-3
23	.223,-2	-.991,-3	-.609,-3	.105,-2	.132,-3	-.555,-3	.400,-3	.745,-3	-.141,-2	-.105,-2
24	.209,-2	-.859,-3	.298,-4	.481,-4	.443,-3	.236,-3	.495,-3	.251,-3	-.115,-2	-.112,-2
25	.217,-2	-.114,-2	-.262,-3	-.305,-3	.896,-3	.157,-2	.134,-2	.541,-4	.725,-3	.916,-3
26	.179,-2	-.131,-4	-.297,-3	.107,-2	.152,-3	.155,-2	.184,-2	.907,-3	.113,-2	.538,-3
27	.987,-3	-.137,-2	-.195,-3	.210,-2	-.770,-3	.596,-3	.157,-2	.122,-2	.273,-3	-.332,-3
28	.514,-3	-.514,-3	-.174,-5	.141,-2	-.609,-3	.261,-3	.822,-3	-.133,-4	.284,-3	-.154,-4
29	-.126,-4	-.451,-4	.427,-3	.892,-3	-.174,-4	-.719,-4	.632,-4	-.319,-3	.367,-3	-.265,-3
30	-.204,-3	.147,-4	.523,-3	.274,-3	-.586,-4	-.279,-7	-.630,-3	-.280,-3	.389,-3	-.586,-3
31	.333,-3	-.182,-3	.392,-3	.431,-3	-.640,-3	-.254,-3	-.143,-2	-.975,-3	.402,-3	-.635,-3
32	.537,-3	-.520,-3	.625,-3	.917,-3	-.287,-3	-.264,-3	-.466,-3	-.675,-3	.647,-3	.168,-3
33	.102,-2	-.616,-3	.200,-3	.101,-2	.470,-4	-.403,-3	.354,-3	.239,-3	.877,-4	.631,-3
34	.927,-3	-.387,-3	.399,-3	.436,-3	.115,-3	-.798,-3	.158,-4	.182,-3	-.210,-4	.422,-3
35	.381,-3	-.262,-3	.297,-3	-.252,-4	-.158,-5	-.493,-3	-.128,-3	-.235,-3	.556,-3	.145,-3
36	.535,-4	-.386,-4	-.895,-3	.149,-4	.869,-4	.773,-4	-.692,-4	-.504,-4	.725,-3	-.396,-3
37	.568,-3	.409,-4	-.474,-3	-.108,-4	.162,-3	-.141,-3	.417,-3	.157,-3	.383,-3	-.100,-2
38	.846,-3	.410,-3	.420,-3	-.294,-3	-.123,-4	-.160,-3	.978,-3	.186,-3	-.140,-3	-.105,-2
39	.527,-3	.342,-3	-.238,-5	-.607,-3	.735,-4	.349,-3	.647,-3	-.235,-3	-.262,-3	-.727,-3
40	.517,-3	-.263,-3	-.270,-3	-.260,-3	.849,-4	.232,-3	.253,-3	.429,-3	-.110,-3	-.387,-3
41	.774,-3	-.169,-4	.582,-4	.248,-3	.534,-4	-.536,-4	.196,-3	.678,-3	-.856,-4	-.675,-3
42	.365,-3	.385,-3	.237,-3	.275,-3	.403,-3	.193,-3	-.299,-3	.138,-3	.266,-4	-.624,-3
43	-.299,-4	.183,-3	.616,-3	-.850,-4	.564,-3	.357,-3	.593,-4	-.338,-3	.280,-3	-.213,-3
44	.161,-3	.697,-4	.365,-3	-.137,-3	.278,-4	-.319,-3	.138,-3	-.438,-3	.474,-3	-.134,-3
45	.283,-3	.191,-3	.169,-3	.457,-3	-.363,-3	-.506,-3	-.187,-3	-.588,-3	.153,-3	-.361,-3
46	.135,-3	.401,-3	.505,-3	.467,-3	-.709,-4	-.332,-3	-.389,-3	-.579,-3	-.363,-3	-.419,-3
47	-.467,-3	.119,-3	.719,-3	-.798,-4	-.225,-4	-.269,-3	-.161,-3	-.272,-3	-.106,-3	-.473,-3
48	-.514,-3	-.820,-4	.728,-3	-.546,-3	-.572,-4	-.606,-3	.211,-3	-.127,-4	.635,-3	-.721,-3
49	.368,-4	-.217,-4	.276,-3	-.435,-3	.279,-3	-.889,-4	.608,-3	.525,-3	.559,-3	-.462,-4
50	.210,-3	.615,-4	.371,-3	.489,-4	.677,-3	.769,-3	.702,-3	.650,-4	-.141,-5	.407,-3
51	-.126,-3	-.112,-3	.550,-3	.219,-3	.735,-3	.531,-3	.282,-3	-.550,-3	.391,-4	.520,-3
52	-.198,-3	.162,-3	.267,-3	-.520,-4	.663,-3	.154,-4	-.212,-4	-.561,-3	.163,-3	.116,-3
53	.135,-3	.308,-3	.398,-3	.113,-3	.313,-3	.287,-3	.150,-4	-.342,-4	.225,-3	.149,-3
54	.106,-3	-.302,-3	.319,-3	.404,-3	-.230,-3	-.178,-3	-.183,-4	-.151,-3	.960,-4	-.772,-5
55	-.177,-3	-.204,-3	-.137,-3	.639,-3	.145,-3	-.372,-3	-.562,-3	-.434,-3	-.576,-3	-.313,-3
56	-.312,-3	.420,-3	-.492,-3	.557,-3	.609,-3	-.258,-3	-.412,-3	-.192,-3	-.481,-3	-.454,-3
57	-.106,-3	.548,-3	-.450,-3	.200,-3	.895,-5	-.322,-3	.116,-3	.218,-3	.585,-3	-.496,-3
58	-.126,-3	.549,-3	-.190,-3	.992,-4	-.328,-3	-.452,-3	-.473,-4	.470,-3	.671,-3	-.290,-3
59	-.248,-4	.584,-3	.547,-4	.168,-3	.234,-4	-.134,-3	-.173,-3	.462,-3	-.115,-3	.515,-3
60	.262,-4	.362,-3	.608,-4	.658,-4	.495,-4	.276,-3	-.571,-4	.303,-3	-.320,-3	.778,

Run No. '5 ; u component

Separation Distance (m.)

N	1	4	5	15	20	21	34	80	84	85
00	.140				.145	.128	.534,-1		.199,-1	.354,-3
01	.124				.106	.985,-1	.982,-2		-.459,-2	-.182,-1
02	.927,-1				.578,-1	.500,-1	-.510,-2		-.395,-2	-.121,-1
03	.755,-1				.357,-1	.277,-1	.338,-2		.670,-2	.160,-2
04	.595,-1				.187,-1	.150,-1	.599,-2		.231,-2	.220,-2
05	.415,-1				.114,-1	.103,-1	-.374,-2		-.148,-2	.185,-2
06	.265,-1				.002,-2	.588,-2	-.666,-2		.269,-2	.101,-1
07	.191,-1				.457,-2	.360,-2	.239,-3		.216,-2	.737,-2
08	.211,-1				.201,-2	-.496,-3	.327,-2		.127,-2	.821,-4
09	.185,-1				.335,-2	-.112,-2	.208,-2		-.888,-3	-.434,-2
10	.139,-1				.277,-2	.707,-3	-.511,-3		.123,-2	-.871,-4
11	.145,-1				.189,-2	.235,-2	-.161,-2		.417,-2	.583,-2
12	.121,-1				.120,-2	.144,-2	-.657,-3		-.123,-2	.181,-2
13	.109,-1				.261,-2	.994,-3	.503,-3		-.204,-2	-.199,-3
14	.774,-2				.153,-2	-.394,-3	.300,-2		-.110,-3	.643,-4
15	.791,-2				.153,-4	-.834,-3	.306,-2		-.535,-3	-.115,-2
16	.954,-2				.321,-3	-.147,-3	-.137,-3		.588,-3	.592,-3
17	.909,-2				.297,-3	.137,-3	-.124,-2		-.508,-3	-.608,-3
18	.665,-2				.935,-3	.956,-3	.172,-2		-.139,-2	-.301,-2
19	.415,-2				.588,-3	-.195,-3	.301,-2		.249,-3	-.292,-2
20	.504,-2				-.785,-3	-.928,-3	-.527,-3		.259,-3	-.565,-3
21	.546,-2				-.482,-3	-.568,-3	-.126,-2		-.421,-4	.973,-3
22	.484,-2				-.788,-3	-.120,-2	-.908,-3		.414,-3	.548,-3
23	.445,-2				-.159,-2	-.164,-2	-.440,-3		.422,-3	-.335,-3
24	.455,-2				-.188,-2	-.209,-2	.301,-4		.125,-2	-.231,-3
25	.378,-2				-.999,-3	-.163,-2	-.135,-3		.135,-2	-.654,-3
26	.354,-2				-.562,-3	-.118,-2	-.906,-3		.376,-3	-.747,-3
27	.328,-2				.381,-4	-.469,-3	-.115,-2		-.741,-3	-.786,-3
28	.240,-2				.495,-3	.296,-3	-.123,-2		-.801,-3	-.917,-3
29	.160,-2				.566,-3	.424,-3	-.888,-3		-.315,-3	-.583,-3
30	.254,-2				.663,-3	.513,-4	.277,-3		-.721,-3	-.105,-2
31	.333,-2				.563,-3	-.343,-4	.837,-3		.105,-3	.117,-3
32	.403,-2				.229,-3	.266,-4	.217,-3		.664,-3	.904,-3
33	.313,-2				-.740,-3	-.254,-3	.320,-3		-.168,-3	.333,-3
34	.222,-2				-.639,-3	-.795,-3	-.482,-3		-.539,-4	.752,-3
35	.192,-2				-.107,-3	-.112,-2	-.305,-3		.491,-3	.479,-3
36	.295,-2				-.521,-3	-.960,-3	.411,-4		.994,-3	.113,-3
37	.213,-2				-.606,-3	-.743,-3	.375,-3		.102,-2	.102,-2
38	.182,-2				-.712,-3	-.152,-2	.278,-3		.127,-2	.133,-2
39	.109,-2				-.619,-3	-.135,-2	.270,-4		.943,-3	.713,-3
40	.734,-3				-.825,-4	-.290,-3	.116,-3		.612,-3	.395,-3
41	.121,-2				.460,-3	-.703,-4	.142,-3		-.258,-3	.591,-3
42	.133,-2				.211,-3	-.850,-3	-.242,-3		-.657,-3	.115,-3
43	.152,-2				-.586,-3	-.146,-2	-.247 -3		-.435,-3	.421,-3
44	.141,-2				-.347,-3	-.518,-3	-.221,-3		-.845,-3	-.215,-3
45	.105,-2				.355,-3	.310,-3	-.341,-3		-.405,-3	-.201,-3
46	.874,-3				.225,-3	.302,-3	-.365,-3		-.904,-4	-.593,-4
47	.485,-3				.393,-4	.345,-3	.156,-3		.153,-3	-.389,-3
48	.944,-3				-.100,-3	-.401,-3	.333,-3		.233,-3	-.122,-2
49	.152,-2				.169,-3	-.344,-3	.310,-3		.178,-3	-.928,-3
50	.769,-3				-.294,-3	-.190,-3	.423,-3		-.153,-3	.511,-4
51	.824,-3				-.492,-3	.198,-3	.245,-3		-.302,-3	.413,-3
52	.904,-3				-.304,-3	.157,-3	.429,-4		.132,-3	.628,-3
53	.679,-3				-.272,-3	-.621,-3	.540,-3		.441,-3	.270,-3
54	.379,-3				.117,-3	-.485,-3	.100,-2		.462,-3	-.453,-3
55	.388,-3				.479,-3	-.249,-5	.815,-3		.390,-4	-.429,-3
56	.929,-3				.718,-3	.282,-3	.233,-3		-.399,-3	-.410,-3
57	.117,-2				.206,-3	-.635,-4	.241,-3		-.828,-4	-.996,-4
58	.927,-3				-.175,-3	-.409,-3	.978,-3		.482,-3	.512,-3
59	.837,-3				-.167,-3	-.196,-3	.891,-3		.606,-3	.292,-3
60	.700 -3				.332,-3	-.227,-4	.341,-3		.469,-3	.284,-3

Run No. 45 ; v component

Seperation Distance (m.)

N	1	4	5	16	20	21	34	80	84	85
00	.247				.201	.207	.134		.129	.135
01	.152				.126	.128	.508,-1		.771,-1	.745,-1
02	.511,-1				.395,-1	.375,-1	.187,-1		.102,-1	.117,-1
03	.270,-1				.120,-1	.121,-1	-.168,-2		.127,-2	.397,-3
04	.142,-1				.545,-2	.517,-2	-.559,-3		.220,-2	.370,-2
05	.722,-2				.339,-2	.216,-2	.189,-2		.872,-3	.803,-2
06	.674,-2				.513,-3	-.110,-3	.155,-2		-.433,-3	-.340,-3
07	.868,-2				-.151,-3	-.208,-3	.194,-3		.15[illegible],-2	.869,-3
08	.716,-2				-.637,-3	-.422,-3	.481,-3		-.320,-3	-.535,-3
09	.618,-2				-.184,-2	-.101,-2	.539,-3		-.757,-3	.334,-4
10	.673,-2				-.128,-2	-.797,-3	.807,-3		.21[illegible],-2	.125,-2
11	.710,-2				-.107,-2	-.212,-3	.416,-3		.379,-2	.220,-2
12	.375,-2				-.490,-3	.302,-4	.715,-4		.113,-2	.704,-3
13	.334,-2				-.542,-4	.432,-4	-.720,-4		-.850,-3	.827,-3
14	.445,-2				-.184,-3	-.445,-3	.541,-3		-.[illegible]35,-3	.754,-3
15	.440,-2				-.422,-3	-.742,-3	.149,-2		.172,-3	.20[illegible],-3
16	.429,-2				-.[illegible]41,-3	-.472,-3	.140,-2		-.778,-3	.535,-4
17	.373,-2				-.339,-3	-.436,-3	.791,-3		-.535,-3	.110,-2
18	.312,-2				-.250,-3	-.322,-3	.435,-3		.[illegible],-3	.149,-2
19	.290,-2				.305,-4	.555,-3	-.223,-3		-.[illegible],-3	.114,-2
20	.253,-2				.333,-3	-.147,-3	-.434,-3		-.913,-3	.945,-3
21	.154,-2				.358,-3	-.[illegible]03,-3	-.493,-3		-.[illegible]04,-3	-.[illegible]05,-3
22	.101,-2				-.251,-3	-.382,-3	-.324,-3		-.224,-3	-.817,-3
23	.105,-2				-.577,-3	.534,-4	-.436,-3		-.149,-3	-.81[illegible],-3
24	.114,-2				-.324,-3	.113,-3	-.131,-3		-.172,-3	-.593,-3
25	.122,-2				-.[illegible]44,-3	.920,-4	.391,-3		-.[illegible]91,-3	.215,-3
26	.127,-2				-.[illegible]45,-3	-.141,-3	-.454,-3		.[illegible]84,-3	.[illegible]18,-3
27	.838,-3				.835,-4	-.572,-3	-.425,-3		.10[illegible],-2	.159,-3
28	.683,-3				.113,-2	-.[illegible]99,-3	.234,-3		.[illegible]87,-3	-.[illegible]08,-3
29	.129,-2				.509,-3	-.318,-3	.238,-3		.[illegible]05,-3	.340,-3
30	.[illegible]51,-3				-.411,-3	-.225,-3	-.[illegible]90,-3		.[illegible]59,-4	.534,-3
31	-.527,-4				.827,-4	-.[illegible]08,-3	-.372,-3		-.[illegible]38,-5	-.171,-3
32	-.182,-3				.159,-3	.[illegible]60,-3	.157,-3		-.123,-3	.114,-3
33	-.204,-3				-.[illegible]00,-3	.342,-3	.22[illegible],-3		-.402,-3	.[illegible]09,-3
34	.412,-3				-.[illegible]28,-3	-.[illegible]08,-3	-.[illegible]04,-3		-.5[illegible],-3	.221,-3
35	.[illegible]26,-3				-.[illegible]17,-2	-.[illegible]00,-3	-.[illegible]75,-3		-.4[illegible],-4	.[illegible]26,-3
36	.[illegible]07,-3				-.429,-4	-.[illegible]17,-3	-.[illegible]8[illegible],-3		.[illegible]03,-3	.119,-2
37	.611,-3				.[illegible]95,-3	-.[illegible]23,-3	-.[illegible]02,-3		.474,-3	.[illegible]43,-3
38	.315,-3				.24[illegible],-3	-.[illegible]45,-3	-.[illegible]72,-3		.12[illegible],-4	.504,-3
39	-.522,-4				.558,-3	-.[illegible]99,-3	-.701,-3		-.[illegible]82,-4	.492,-3
40	.114,-3				.[illegible]80,-3	-.312,-3	-.451,-3		.[illegible]84,-3	.[illegible]53,-3
41	.770,-3				-.325,-3	-.[illegible]07,-3	-.[illegible]27[illegible],-3		.[illegible]24,-3	.476,-3
42	.148,-2				-.774,-3	-.[illegible]02,-3	-.41[illegible],-3		-.[illegible]24,-4	-.[illegible]23,-3
43	.781,-3				-.[illegible]02,-2	-.416,-3	-.[illegible]35,-3		-.[illegible]42,-3	-.[illegible]71,-4
44	.354,-3				-.[illegible]21,-3	.311,-4	-.[illegible]83,-3		-.[illegible]13,-3	.[illegible]31,-3
45	.345,-3				.472,-4	.274,-3	-.[illegible]23,-3		-.[illegible]11,-3	.[illegible]31,-3
46	-.571,-3				.[illegible]22,-3	.124,-3	-.[illegible]54,-3		-.[illegible]04,-3	-.[illegible]31,-4
47	-.872,-3				.[illegible]69,-3	-.[illegible]02,-3	.112,-3		-.321,-3	-.[illegible]97,-3
48	-.733,-3				.[illegible]33,-3	.[illegible]16,-3	.[illegible]18,-3		.[illegible]02,-3	-.[illegible]86,-3
49	-.410,-3				.[illegible]07,-3	-.235,-4	.[illegible]90,-4		-.[illegible]79,-3	-.[illegible]07,-3
50	.450,-3				.414,-4	-.[illegible]94,-3	.[illegible]94,-3		-.712,-3	-.[illegible]15,-3
51	.112,-2				.[illegible]03,-4	-.224,-3	.[illegible]57,-3		-.112,-2	-.[illegible]10,-3
52	.108,-2				.[illegible]09,-4	.[illegible]61,-4	.315,-3		-.[illegible]82,-3	.107,-3
53	.[illegible]29,-3				-.355,-3	-.146,-3	.[illegible]40,-4		.12[illegible],-3	.102,-3
54	-.109,-3				-.[illegible]19,-3	.[illegible]09,-3	-.421,-3		-.[illegible]84,-4	-.[illegible]40,-3
55	-.[illegible]46,-3				.281,-3	.247,-3	-.227,-3		.[illegible]23,-4	-.126,-3
56	-.[illegible]60,-4				.[illegible]47,-3	-.[illegible]33,-3	.[illegible]51,-3		.[illegible]75,-3	.[illegible]58,-3
57	.222,-3				.[illegible]35,-3	-.[illegible]68,-3	.[illegible]36,-2		-.[illegible]21,-3	.[illegible]16,-3
58	-.772,-[illegible]				-.[illegible]16,-3	.[illegible]04,-4	.[illegible]54,-3		-.[illegible]28,-3	-.[illegible]49,-4
59	-.[illegible]95,-3				-.[illegible]02,-3	-.[illegible]74,-3	.[illegible]73,-3		-.[illegible]40,-4	-.[illegible]51,-4
60	-.879,-4				-.303,-3	-.427,-3	.160,-3		-.186,-3	.853,-4

Run No. 46 : u component

	Separation Distance (m.)									
Y	6	12	18	24	36	42	48	72	84	90
00	.115	.113	.912,-1	.960,-1	.148	.124	.212	.827,-1	.108	.862,-1
01	.726,-1	.720,-1	.554,-1	.456,-1	.855,-1	.659,-1	.835,-1	.396,-1	.350,-1	.439,-1
02	.604,-1	.168,-1	.150,-1	.284,-1	.212,-1	.109,-1	-.768,-2	.125,-1	-.142,-2	.310,-1
03	.289,-1	.132,-2	.442,-2	-.119,-2	-.487,-2	-.215,-2	.231,-3	-.110,-2	.363,-3	.156,-1
04	.10[illegible],-1	-.275,-2	.406,-2	.593,-2	-.204,-1	-.125,-1	.108,-1	-.144,-2	-.109,-1	-.531,-2
05	.130,-1	-.380,-3	.413,-2	.559,-2	-.144,-1	-.892,-2	.767,-2	.111,-2	-.108,-1	-.540,-2
06	.270,-2	.362,-2	.203,-2	.357,-2	-.680,-2	-.248,-2	-.430,-3	-.460,-2	-.673,-2	-.182,-2
07	.505,-2	.643,-3	.311,-2	.171,-2	-.682,-2	-.203,-2	-.757,-2	-.726,-2	-.201,-2	.141,-2
08	.263,-3	.521,-2	.263,-2	-.413,-2	-.606,-2	.150,-2	-.368,-2	-.734,-2	-.755,-4	.255,-3
09	-.226,-2	.387,-2	.249,-2	-.464,-2	-.409,-2	.508,-2	.181,-2	.290,-2	-.956,-3	-.373,-3
10	-.331,-2	.515,-3	.172,-2	-.174,-2	-.212,-2	.272,-2	.269,-2	.604,-2	-.120,-2	.449,-4
11	-.904,-4	.285,-3	.743,-3	-.264,-3	-.216,-2	-.367,-3	.230,-2	.383,-2	-.959,-3	.296,-2
12	.811,-3	.132,-2	-.203,-3	.252,-2	-.205,-2	-.176,-2	.535,-2	.402,-3	.469,-3	.486,-2
13	.135,-2	.329,-2	-.504,-3	.132,-2	-.464,-3	-.274,-3	.387,-2	-.112,-2	.213,-2	.478,-2
14	-.688,-4	.243,-2	-.162,-2	.475,-3	-.684,-3	-.299,-3	.307,-2	-.140,-2	.194,-2	.455,-2
15	-.129,-2	.102,-2	-.129,-2	.400,-2	-.523,-3	-.137,-2	.178,-2	.129,-3	.319,-2	.362,-2
16	-.217,-2	.165,-2	-.227,-2	.456,-2	.394,-3	-.195,-2	.115,-2	-.245,-3	.302,-2	.294,-2
17	-.246,-2	.245,-2	-.276,-2	.297,-2	-.762,-3	-.236,-2	.278,-2	-.348,-3	.310,-2	.200,-2
18	-.152,-2	.103,-2	-.206,-2	.137,-2	-.104,-2	-.127,-2	.235,-2	.225,-3	.429,-2	.189,-2
19	-.113,-2	-.107,-3	-.189,-2	.917,-3	.120,-2	-.174,-2	.652,-3	-.542,-3	.559,-3	.105,-2
20	-.131,-2	.250,-3	-.384,-3	.674,-3	.217,-2	-.178,-2	.236,-2	-.680,-3	-.203,-3	-.985,-3
21	-.538,-3	.160,-2	.142,-3	-.455,-3	.869,-3	-.154,-2	.304,-2	-.588,-4	.161,-2	-.260,-2
22	-.114,-2	.801,-3	-.316,-3	-.195,-3	-.101,-2	-.699,-3	.280,-2	.517,-3	.742,-3	-.174,-2
23	-.123,-2	.176,-3	-.212,-3	-.762,-5	-.108,-2	-.755,-3	.647,-3	.964,-5	.125,-3	-.129,-3
24	-.812,-3	.474,-3	.244,-3	-.461,-3	-.124,-3	-.133,-2	-.656,-3	-.176,-3	.333,-3	.951,-3
25	.662,-4	-.214,-3	.432,-3	-.154,-3	-.506,-4	-.513,-3	.774,-3	-.786,-3	.832,-3	.765,-3
26	.964,-3	-.880,-3	.363,-3	.591,-3	-.510,-3	.124,-2	.862,-3	-.928,-3	.791,-3	.113,-2
27	.137,-3	.933,-4	-.366,-3	.252,-4	-.220,-3	.119,-2	.399,-3	-.311,-3	-.231,-3	.130,-2
28	-.126,-2	.583,-3	-.567,-3	-.446,-3	-.764,-3	.921,-3	.528,-3	.602,-3	-.421,-3	.109,-2
29	-.431,-3	.648,-3	-.773,-3	.261,-3	-.516,-3	.214,-3	.398,-3	-.142,-3	.185,-3	.824,-3
30	.601,-3	.155,-3	-.608,-3	.420,-3	.290,-4	.774,-4	-.371,-3	.349,-4	.782,-3	.697,-3
31	.527,-3	.302,-4	-.273,-3	-.365,-3	.391,-3	.139,-3	.496,-3	.709,-3	.698,-3	-.128,-4
32	.430,-3	-.844,-3	-.159,-3	-.122,-2	.848,-3	-.428,-3	.501,-3	-.311,-3	.998,-3	-.664,-3
33	.532,-3	-.759,-3	-.344,-3	-.958,-3	.258,-3	.210,-3	-.852,-3	-.593,-3	.140,-2	-.126,-2
34	.118,-3	-.230,-3	-.134,-3	-.253,-3	-.154,-3	.396,-3	-.140,-3	.284,-3	.161,-3	-.684,-3
35	.126,-3	.512,-3	.694,-3	.361,-3	.166,-3	.573,-3	.687,-3	.381,-3	-.858,-3	.286,-3
36	.252,-3	.108,-2	.777,-3	.533,-3	.336,-3	.622,-3	-.129,-3	-.924,-3	-.594,-3	-.176,-3
37	.316,-3	.987,-3	.793,-3	.122,-3	.604,-4	.270,-3	-.312,-3	-.249,-2	-.321,-3	-.924,-3
38	.569,-3	.549,-3	.313,-3	-.132,-3	.753,-4	-.137,-3	.563,-3	-.171,-2	-.584,-4	-.311,-4
39	.278,-3	.415,-3	-.134,-3	-.522,-4	.171,-4	-.630,-3	.886,-3	-.380,-3	-.726,-4	.744,-3
40	-.340,-3	.520,-3	-.413,-4	.357,-3	-.911,-4	-.608,-3	.254,-3	-.464,-3	-.520,-3	.187,-3
41	-.468,-3	.135,-3	-.581,-3	.696,-3	-.817,-4	-.273,-3	-.157,-3	-.131,-2	-.430,-3	-.198,-3
42	-.474,-3	-.405,-3	-.484,-3	.569,-3	-.711,-4	-.324,-3	.676,-4	-.830,-3	-.409,-3	.265,-3
43	-.249,-3	-.246,-3	.317,-3	.964,-4	-.365,-3	-.672,-3	.315,-3	.436,-3	-.157,-4	.347,-3
44	.428,-3	-.254,-3	.336,-3	.977,-4	-.357,-3	-.475,-3	.311,-3	.899,-3	.256,-3	.466,-3
45	.297,-3	-.149,-3	.299,-4	.487,-4	-.163,-3	-.143,-3	.262,-3	.108,-2	.116,-3	.269,-3
46	.267,-3	.273,-3	-.120,-3	-.193,-3	-.169,-3	.420,-4	-.227,-3	.523,-3	-.320,-4	-.267,-3
47	.858,-5	.128,-3	.346,-4	-.277,-3	-.278,-3	.198,-3	-.714,-4	.160,-3	-.280,-3	-.492,-3
48	-.161,-3	.165,-3	-.367,-3	-.201,-3	-.107,-3	.306,-3	.195,-4	.423,-3	-.535,-4	-.384,-3
49	-.255,-4	.579,-3	-.259,-3	.162,-3	.158,-3	.159,-3	.267,-3	-.235,-4	.213,-3	-.407,-3
50	.390,-4	.390,-3	-.518,-4	.467,-3	.214,-3	.277,-3	.968,-4	-.795,-3	-.761,-4	-.128,-3
51	-.198,-4	.137,-3	-.278,-3	.365,-3	-.647,-5	.140,-3	-.228,-3	-.287,-3	-.319,-3	-.368,-4
52	.720,-4	.237,-3	-.403,-3	-.206,-3	-.615,-4	.174,-3	-.110,-3	-.647,-7	-.185,-3	-.312,-3
53	.331,-3	.698,-4	-.241,-3	-.104,-3	.260,-3	.158,-3	.599,-3	.221,-3	.337,-3	-.332,-3
54	.685,-3	-.144,-3	-.170,-3	-.101,-3	.465,-3	-.790,-4	.829,-3	-.112,-4	.337,-3	-.178,-3
55	.727,-3	-.932,-4	.239,-3	-.481,-3	.142,-3	.162,-3	.567,-3	-.555,-3	-.159,-3	.663,-4
56	.309,-3	-.195,-3	.463,-3	-.452,-3	-.105,-4	.209,-3	-.341,-3	-.463,-3	-.651,-3	-.177,-3
57	-.115,-4	-.274,-3	.229,-3	-.444,-4	-.108,-3	.149,-3	-.611,-3	.146,-4	-.413,-3	.532,-4
58	.218,-4	.311,-4	-.773,-4	.264,-4	-.356,-3	.136,-3	.124,-3	.296,-4	.65[illegible],-4	-.582,-5
59	.140,-3	.900,-4	-.304,-3	-.440,-4	-.342,-3	-.135,-3	.465,-3	.579,-4	.16[illegible],-4	-.585,-3
60	.186,-3	.146,-4	-.357,-3	-.934,-4	-.162,-3	-.131,-3	.225,-3	.250,-3	-.983,-4	-.605,-3

Run No. 46 ; v comp

Separation Dista

N	6	12	18	24	36	48	60	72	84	90
00	.132	.128	.144	.159	.142	.162	.168	.148	.133	.152
01	.606,-1	.578,-1	.623,-1	.710,-1	.632,-1	.721,-1	.764,-1	.668,-1	.576,-1	.678,-1
02	.484,-2	.240,-2	-.108,-2	.189,-2	.152,-3	.157,-2	.189,-2	.274,-2	-.190,-2	.247,-2
03	.434,-2	.604,-3	-.136,-2	-.514,-3	-.159,-2	-.158,-3	-.250,-2	-.175,-2	-.366,-2	.802,-3
04	.458,-2	.223,-2	.110,-2	-.847,-4	-.687,-3	-.378,-3	.251,-4	-.873,-3	-.149,-2	.491,-3
05	.487,-2	.188,-2	-.242,-3	.190,-2	.122,-2	-.664,-3	.197,-2	.963,-3	.535,-4	.106,-2
06	.434,-2	.120,-2	-.123,-2	.456,-2	.133,-2	.210,-3	.159,-2	.197,-2	.437,-3	.130,-2
07	.684,-2	.158,-2	.165,-2	.361,-2	.396,-3	.197,-2	-.166,-3	.191,-2	.116,-2	.116,-2
08	.308,-2	.166,-2	.326,-2	.130,-2	-.961,-4	.183,-2	-.963,-3	.513,-3	.174,-2	.222,-2
09	.371,-2	.115,-2	.137,-2	-.208,-2	-.127,-2	-.109,-3	-.133,-2	-.474,-3	.253,-2	.375,-2
10	.255,-2	.371,-3	-.320,-3	-.195,-2	-.437,-3	-.231,-2	-.907,-3	-.101,-2	.127,-2	.280,-2
11	.250,-2	.571,-3	-.991,-3	-.444,-4	.147,-3	-.954,-3	.109,-3	-.423,-3	.461,-3	.932,-3
12	.325,-2	.640,-3	-.746,-3	.168,-3	-.115,-2	-.692,-3	.239,-3	-.152,-4	.145,-3	-.123,-2
13	.185,-2	.444,-3	.228,-3	-.163,-2	-.122,-2	-.167,-2	.494,-3	-.202,-4	.132,-3	-.194,-2
14	.796,-3	.214,-2	.128,-2	-.266,-2	-.805,-3	-.141,-2	-.322,-3	.460,-3	.697,-3	-.535,-3
15	.160,-2	.159,-2	.578,-3	-.112,-2	-.102,-2	-.964,-3	-.173,-2	.901,-4	.521,-3	.492,-3
16	.250,-2	.264,-4	.633,-3	-.666,-3	-.568,-3	-.807,-3	-.867,-3	.116,-3	.305,-3	.382,-3
17	.126,-2	.108,-2	.979,-3	-.276,-3	-.438,-3	-.497,-4	-.207,-3	-.158,-3	-.162,-3	-.419,-4
18	.662,-3	.822,-3	.305,-3	.826,-3	.346,-3	-.158,-3	-.183,-3	-.279,-3	-.375,-3	-.434,-3
19	.115,-2	-.485,-3	.270,-3	.492,-3	.939,-3	-.100,-2	-.283,-3	.297,-4	-.826,-4	-.227,-3
20	.312,-3	-.550,-3	-.834,-3	.262,-3	.106,-2	-.830,-3	.198,-3	.136,-3	-.526,-3	-.962,-4
21	.216,-3	.111,-3	-.677,-3	.971,-3	.225,-3	-.506,-3	.515,-3	-.266,-3	-.704,-4	.157,-3
22	.114,-2	.696,-3	.373,-3	.504,-3	.158,-3	-.417,-3	.316,-4	-.599,-4	.863,-3	.162,-3
23	.149,-2	.677,-3	.929,-3	-.313,-3	.158,-3	-.710,-3	.369,-4	-.203,-3	.194,-3	-.982,-3
24	.132,-2	-.142,-3	.375,-3	-.345,-3	.104,-3	-.482,-3	.594,-3	-.523,-3	-.557,-3	-.184,-2
25	.708,-3	-.121,-2	-.237,-3	.215,-3	.541,-3	.629,-5	.537,-3	-.731,-3	-.466,-4	-.107,-2
26	.318,-3	-.926,-3	-.567,-4	.245,-3	.288,-3	.102,-3	-.153,-3	-.624,-3	.122,-3	-.176,-3
27	.819,-3	.226,-3	.335,-3	-.298,-3	.353,-4	.509,-3	.165,-3	.340,-3	-.187,-3	.141,-3
28	.810,-3	-.187,-3	-.152,-3	-.200,-3	-.194,-3	.189,-2	.942,-3	.311,-3	-.311,-3	.420,-3
29	.133,-3	-.757,-3	-.117,-2	.265,-3	-.227,-3	.151,-2	.102,-2	-.282,-3	-.279,-3	.594,-3
30	-.153,-3	-.474,-3	-.805,-3	-.121,-3	-.330,-3	.646,-3	.336,-3	-.194,-3	-.333,-3	.714,-4
31	.189,-3	.457,-3	.462,-3	-.217,-3	-.250,-3	.810,-3	.131,-3	.327,-3	-.283,-3	-.481,-4
32	.880,-3	.622,-4	.257,-3	.134,-3	.405,-3	.818,-3	.614,-3	.189,-3	.472,-4	.479,-3
33	.657,-3	-.304,-3	.346,-3	.387,-3	.124,-4	.321,-3	.740,-3	-.459,-3	.231,-3	-.186,-3
34	-.232,-3	.591,-3	.255,-3	.141,-4	-.108,-2	.143,-3	.646,-3	-.533,-3	-.812,-4	-.989,-3
35	-.273,-3	.133,-2	-.392,-3	-.102,-3	-.756,-3	.953,-5	.377,-3	-.141,-4	.375,-4	-.853,-3
36	.381,-3	.102,-2	-.485,-3	-.751,-4	.818,-4	.887,-4	-.229,-3	.180,-3	.240,-3	-.699,-3
37	.521,-3	.486,-3	-.253,-3	-.302,-3	.509,-3	.466,-3	-.462,-3	.362,-3	.236,-3	-.731,-3
38	.815,-3	-.485,-3	-.135,-3	-.843,-3	.631,-3	.967,-3	.258,-4	.203,-3	.710,-4	-.654,-3
39	.997,-4	-.431,-3	-.338,-4	-.205,-3	.320,-3	.536,-3	.846,-3	-.128,-3	.595,-4	-.527,-3
40	-.594,-3	.146,-3	-.884,-4	.297,-3	-.597,-4	-.204,-3	.425,-3	-.370,-3	.403,-3	-.999,-3
41	-.155,-3	-.307,-3	.282,-3	.280,-3	-.313,-3	-.227,-3	-.271,-3	-.396,-3	.424,-3	-.812,-3
42	.216,-3	-.999,-3	.317,-4	.986,-3	-.152,-3	-.389,-3	-.680,-3	-.780,-3	-.279,-3	.554,-5
43	.127,-3	-.109,-2	-.678,-3	.924,-3	.378,-3	-.209,-3	.264,-3	-.400,-3	-.760,-3	.471,-3
44	.325,-3	-.905,-3	-.745,-3	.277,-3	.220,-3	.402,-3	.511,-3	-.748,-4	-.329,-3	-.101,-3
45	.303,-3	-.512,-3	-.896,-3	-.228,-4	-.448,-3	.535,-3	-.113,-3	.106,-4	-.717,-4	.240,-3
46	-.522,-4	-.213,-3	-.443,-3	-.684,-4	-.281,-3	.173,-4	.496,-3	-.706,-4	-.337,-3	.593,-3
47	-.371,-3	-.335,-3	.325,-3	.894,-4	-.955,-5	-.400,-3	.388,-3	-.205,-3	-.117,-2	.511,-4
48	-.374,-3	-.558,-3	.176,-3	.[illegible]	-.327,-4	.132,-4	.191,-3	-.454,-3	-.579,-3	-.400,-3
49	-.708,-3	-.365,-3	-.493,-3	-.503,-4	-.381,-3	.705,-3	.696,-3	-.803,-4	.306,-3	-.159,-3
50	-.854,-3	-.368,-3	-.169,-4	.102,-3	-.297,-3	.453,-3	.191,-3	.403,-3	.979,-4	.863,-4
51	-.642,-3	-.220,-3	.818,-3	.211,-3	.359,-3	.111,-3	-.541,-3	.426,-3	-.241,-3	.136,-3
52	-.555,-3	.282,-3	.689,-3	.945,-4	.421,-3	.315,-3	-.212,-3	.389,-3	-.137,-3	-.162,-3
53	-.614,-3	.516,-3	-.132,-3	.243,-3	.554,-3	.514,-3	.436,-3	.389,-3	.323,-3	.920,-4
54	-.549,-4	.658,-4	-.218,-3	.292,-3	.182,-3	-.453,-3	.347,-3	-.896,-4	.135,-3	.273,-3
55	.763,-3	.183,-4	.141,-3	.389,-3	.526,-4	-.271,-3	.590,-3	-.386,-3	-.476,-3	.331,-3
56	.705,-3	.513,-3	.555,-3	.730,-3	.437,-3	.334,-3	.236,-3	-.711,-4	-.193,-3	-.114,-3
57	-.583,-4	.245,-3	.220,-3	.843,-3	-.500,-4	.421,-3	-.315,-3	-.115,-3	.311,-3	-.896,-3
58	-.255,-3	-.453,-3	-.126,-3	.409,-3	-.402,-4	-.355,-3	-.153,-3	-.137,-3	.312,-3	-.572,-3
59	.977,-4	-.457,-3	-.205,-3	-.261,-3	.482,-3	-.604,-3	.634,-4	.397,-4	.159,-3	.178,-3
60	.204,-3	-.311,-3	-.292,-3	-.314,-3	.617,-3	-.439,-3	.750,-4	.275,-4	.160,-3	.219,-3

Run No. 53 ; u component

	Separation Distance (m.)									
N	1	4	5	16	20	21	64	80	84	85
00	.633,-2	.577,-2	.913,-2	.925,-2	.583,-2	.584,-2	.116,-1	.107,-1	.708,-2	.115,-1
01	.323,-2	.278,-2	.438,-2	.438,-2	.275,-2	.440,-2	.521,-2	.480,-2	.324,-2	.490,-2
02	.727,-3	.227,-3	.373,-3	.382,-3	.208,-3	-.153,-3	.531,-3	.242,-3	.107,-3	-.291,-3
03	.605,-3	.209,-3	-.131,-3	-.149,-3	-.130,-3	-.318,-3	.188,-3	.265,-3	-.104,-3	-.186,-3
04	.144,-3	.296,-3	-.210,-3	-.394,-3	-.281,-3	-.116,-3	.129,-3	.132,-3	-.163,-3	.259,-3
05	-.395,-3	.172,-4	-.566,-4	-.206,-3	.161,-5	-.313,-3	.210,-3	-.336,-5	-.350,-3	.446,-3
06	-.646,-3	-.401,-4	-.115,-3	.577,-4	.262,-3	-.741,-3	.867,-4	.361,-4	-.396,-3	.209,-3
07	-.643,-3	.961,-4	-.844,-4	.551,-5	.114,-3	-.258,-3	-.793,-4	.226,-3	-.194,-3	-.164,-3
08	-.258,-3	.391,-4	.264,-4	-.132,-3	-.516,-5	.225,-3	-.173,-3	.436,-3	.177,-4	-.257,-3
09	.441,-5	.320,-5	.155,-4	-.226,-3	.354,-4	.237,-3	.322,-4	.508,-3	.785,-4	.810,-4
10	.346,-4	-.563,-4	-.716,-5	-.237,-3	.499,-4	.624,-4	.257,-3	.251,-3	-.428,-5	.210,-3
11	.803,-4	-.293,-3	-.473,-4	-.273,-3	-.114,-4	-.550,-3	.313,-3	.284,-3	-.160,-3	-.526,-4
12	.114,-3	-.363,-3	-.106,-3	-.254,-3	-.123,-3	-.757,-3	.460,-4	.497,-3	-.211,-3	-.155,-3
13	.850,-4	-.214,-3	-.193,-3	.413,-5	-.221,-3	-.449,-3	-.133,-3	.320,-3	-.997,-4	.293,-4
14	.813,-4	-.136,-3	-.204,-3	.117,-3	-.133,-3	-.142,-3	.353,-4	.505,-4	-.111,-3	.115,-3
15	.451,-5	.200,-4	.323,-4	.810,-4	-.206,-4	.750,-4	.312,-4	-.143,-3	-.162,-3	.722,-4
16	-.634,-4	.263,-4	-.762,-4	.575,-4	-.103,-3	.666,-4	.664,-4	-.950,-4	-.163,-3	-.301,-5
17	-.247,-4	.573,-4	-.122,-3	-.817,-4	-.394,-4	-.504,-5	-.338,-4	.414,-5	-.119,-3	-.349,-5
18	-.831,-4	-.383,-4	-.962,-4	-.111,-3	.979,-4	.529,-4	-.210,-4	-.135,-3	-.445,-4	.119,-3
19	-.105,-3	-.132,-3	-.681,-4	-.129,-3	.130,-3	.873,-4	.160,-3	-.144,-3	.459,-4	.158,-3
20	-.638,-4	-.827,-4	-.590,-4	-.179,-3	.669,-4	.997,-5	.527,-4	.487,-5	.434,-5	.280,-4
21	-.130,-3	-.533,-4	-.143,-3	-.172,-3	-.235,-4	.742,-4	-.122,-3	.143,-3	-.159,-3	-.727,-4
22	-.135,-3	.954,-4	-.212,-3	-.144,-3	-.655,-4	.132,-3	-.297,-4	.220,-3	-.256,-3	.405,-4
23	.139,-4	.740,-4	-.102,-3	-.121,-3	-.133,-4	.159,-3	-.469,-4	.132,-3	-.602,-4	.259,-4
24	.110,-3	-.321,-4	-.998,-4	-.452,-4	.129,-3	.298,-3	-.662,-4	-.547,-4	.448,-4	-.604,-5
25	.141,-3	-.620,-4	-.236,-3	.978,-4	.144,-3	.160,-3	-.116,-3	-.840,-4	.505,-5	-.200,-4
26	.103,-3	-.311,-4	-.228,-3	.102,-3	.738,-6	-.172,-3	-.115,-3	.207,-4	.389,-4	-.920,-4
27	.106,-3	-.539,-5	-.116,-3	-.808,-4	-.401,-4	-.145,-3	.117,-3	.104,-3	.949,-4	-.960,-4
28	.881,-4	.413,-4	-.847,-4	-.106,-3	.340,-4	.502,-5	.242,-3	.570,-4	.103,-3	.816,-4
29	-.865,-5	.264,-4	-.888,-4	.398,-4	.364,-4	-.357,-4	.147,-3	.192,-4	.451,-4	.340,-3
30	-.950,-4	-.779,-5	-.736,-4	.495,-4	.189,-4	-.130,-3	-.923,-4	.351,-4	-.164,-4	.496,-3
31	-.558,-4	-.170,-4	-.451,-4	-.351,-4	.527,-4	-.498,-5	-.713,-4	.545,-4	-.532,-4	.211,-3
32	.182,-4	.358,-4	-.575,-4	-.371,-4	.110,-3	.252,-4	.252,-5	.151,-4	-.992,-5	-.103,-3
33	.660,-4	.719,-4	-.755,-4	.206,-4	.561,-4	-.490,-4	-.105,-3	.209,-4	.297,-4	-.390,-4
34	-.236,-4	-.274,-4	-.326,-4	-.924,-4	.454,-4	-.127,-4	-.394,-4	.753,-4	.416,-4	.207,-4
35	-.102,-3	-.637,-4	-.267,-4	-.106,-3	.145,-4	.692,-4	.722,-4	.339,-4	-.140,-4	-.201,-4
36	-.218,-4	-.466,-4	-.556,-4	-.357,-4	-.402,-4	.121,-3	.152,-3	-.205,-4	-.354,-4	.133,-4
37	.795,-4	-.887,-5	-.124,-3	.483,-4	-.193,-4	.478,-7	.101,-3	.987,-5	.186,-4	.167,-4
38	.843,-4	.223,-4	-.988,-4	.235,-4	.522,-4	-.462,-4	.415,-4	.578,-4	-.339,-5	-.411,-4
39	-.374,-4	.349,-4	-.284,-4	-.635,-4	.687,-4	.323,-4	.535,-4	.946,-5	-.143,-4	.246,-4
40	-.434,-4	.491,-5	-.423,-4	-.926,-4	.417,-4	.468,-4	.173,-6	-.245,-4	.181,-4	.694,-4
41	.293,-4	.261,-4	.242,-4	-.431,-4	.159,-4	.716,-4	-.290,-4	.326,-4	-.177,-5	.670,-4
42	.410,-4	.130,-4	.452,-4	.397,-5	-.189,-4	-.518,-4	.142,-5	.298,-4	-.438,-4	.457,-4
43	.201,-4	.259,-4	-.356,-4	-.145,-5	-.502,-6	-.751,-4	.200,-4	-.342,-4	-.259,-4	-.754,-4
44	.257,-4	.166,-4	-.361,-4	-.182,-4	.115,-4	.681,-5	.670,-4	.105,-4	-.196,-4	-.231,-4
45	.296,-4	-.265,-4	-.535,-4	-.401,-4	-.855,-5	.297,-4	.109,-3	-.156,-4	.296,-4	-.262,-4
46	.215,-4	-.332,-4	.219,-4	-.690,-4	-.151,-4	-.359,-4	.956,-4	-.848,-4	.752,-4	-.189,-4
47	-.539,-4	-.800,-5	.119,-3	-.515,-4	.254,-4	-.554,-4	.747,-5	-.760,-4	-.565,-5	-.103,-4
48	-.539,-4	-.206,-4	.104,-3	-.950,-4	.282,-4	-.392,-4	-.689,-5	.908,-5	-.261,-4	-.145,-4
49	-.609,-5	-.280,-4	-.152,-4	-.154,-3	.408,-4	.537,-4	.464,-4	-.219,-4	-.142,-4	-.157,-4
50	-.378,-5	.639,-5	-.712,-4	-.152,-3	.840,-4	.121,-3	.103,-4	-.613,-4	.223,-4	-.417,-4
51	-.132,-4	.250,-4	-.104,-4	-.888,-4	.680,-4	.962,-5	-.547,-4	-.668,-5	.102,-4	.157,-4
52	-.403,-4	.211,-4	.561,-4	-.318,-4	.343,-4	-.364,-4	-.601,-4	.445,-4	.406,-4	.365,-4
53	-.517,-4	-.177,-5	.107,-3	.328,-5	.194,-4	-.239,-4	.592,-4	.915,-4	.437,-5	.226,-4
54	-.398,-4	-.644,-5	.535,-4	.239,-6	-.132,-5	.400,-4	.116,-4	.157,-3	-.236,-4	.581,-5
55	.158,-6	.492,-5	-.115,-4	-.308,-4	.259,-4	.802,-4	-.784,-4	.868,-4	-.220,-4	-.261,-4
56	.235,-4	.713,-5	.452,-4	-.218,-4	.205,-4	.706,-4	-.512,-4	.260,-4	-.412,-4	-.229,-4
57	-.321,-4	-.881,-5	.783,-4	-.495,-4	.562,-4	-.376,-4	.349,-5	-.776,-5	-.312,-4	-.493,-4
58	-.662,-4	-.110,-4	.617,-4	.196,-4	.619,-4	-.592,-4	-.176,-4	-.322,-4	.211,-5	-.464,-4
59	-.218,-4	.529,-5	.424,-4	.296,-4	.100,-4	.133,-5	-.613,-4	-.494,-4	.157,-4	-.179,-4
60	.135,-4	.142,-4	.461,-4	.994,-5	-.140,-4	.204,-4	-.404,-4	-.358,-4	-.242,-5	-.309,-4

Run No. 53 ; v component

Separation Distance (m.)

N	1	4	5	16	20	21	64	80	84	85
00	.338,-2	.323,-2	.452,-2	.522,-3	.371,-2	.512,-2	.390,-2	.325,-2	.230,-2	.323,-2
01	.177,-2	.159,-2	.227,-2	.249,-2	.175, 2	.241,-2	.177,-2	.144,-2	.104,-2	.145,-2
02	.433,-3	.312,-3	.433,-3	.300,-3	.206,-3	.194,-3	.297,-4	-.587,-4	-.636,-6	-.468,-4
03	.384,-3	.274,-3	.342,-3	.118,-3	.130,-3	.576,-4	-.347,-4	-.132,-3	-.449,-4	-.115,-3
04	.253,-3	.138,-3	.175,-3	.682,-5	.511,-4	.151.-4	.159,-4	-.631,-4	.359,-6	-.631,-4
05	.146,-3	.515,-4	.405,-4	.906,-6	.214,-4	-.197,-4	.180,-4	.200,-5	.212,-4	.473,-4
06	.120,-3	.737,-6	.127,-4	.181,-4	-.107,-4	-.616,-4	-.406,-4	.624,-4	-.508,-5	.135,-3
07	.123,-3	-.118,-4	.531,-4	.280,-4	.103,-4	.100,-5	-.322,-4	.309,-4	-.101,-4	.749,-4
08	.150,-3	.101,-4	.947,-4	-.220,-4	.240,-4	-.325,-5	.263,-4	-.291,-4	.278,-4	.416,-4
09	.176,-3	.340,-4	.906,-4	-.652,-6	.297,-4	-.219,-4	.771,-4	-.292,-4	.442,-4	.427,-4
10	.841,-4	.158,-4	.356,-4	.419,-4	.164,-4	-.197,-4	.330,-4	.834,-5	.103,-4	.596,-4
11	.661,-4	.123,-4	.375,-4	.996,-5	.190,-5	-.148,-4	.172,-4	.490,-4	-.337,-4	.494,-4
12	.108,-3	-.385,-5	.723,-4	-.681,-4	.774,-5	-.173,-5	.359,-4	.422,-4	-.902,-4	-.518,-4
13	.942,-4	-.298,-4	.858,-4	-.890,-4	.199,-4	-.559,-4	-.537,-5	.307,-4	-.647.-4	-.162,-4
14	.139,-3	-.132,-4	.447,-4	-.900,-5	-.287,-4	-.104,-3	-.532,-4	-.186,-4	-.174,-4	.164,-4
15	.208,-3	.769,-6	.128,-5	-.484,-5	-.557,-4	-.521,-4	-.832,-4	.725,-5	-.195,-4	.165,-4
16	.181,-3	-.240,-4	-.566,-4	-.838,-5	-.688,-4	-.568,-4	-.749,-4	-.907,-5	-.130,-4	-.128,-4
17	.143,-3	.186,-5	-.174,-4	.283,-4	-.605,-4	-.819,-4	-.185,-4	-.279,-4	.104,-4	.114,-4
18	.120,-3	.202,-4	.811,-4	.913,-4	-.725,-4	-.101,-3	-.177,-5	-.175,-4	.284,-5	.797,-5
19	.910,-4	.264,-4	.113,-3	.993,-4	-.953,-4	-.631,-4	-.210,-4	.926,-5	.640,-5	-.306,-5
20	.134,-3	.305,-4	.754,-4	.122,-4	-.554,-4	-.147,-4	-.504,-5	.548,-4	.299,-4	.375,-4
21	.180,-3	.426,-5	.369,-4	-.456,-4	.573,-4	.482,-4	-.358,-4	.861,-4	.187,-4	.648,-4
22	.169,-3	.285,-4	.456,-4	-.600,-4	.676,-4	.961,-4	.236,-4	-.317,-4	-.363,-4	-.451,-5
23	.125,-3	.142,-4	-.138,-4	-.529,-4	.522,-4	.766,-4	.128,-3	-.128,-3	.325,-5	.532,-4
24	.134,-3	-.394,-4	-.206,-4	-.611,-4	.558,-4	.150,-4	.763,-4	-.593,-4	.797,-4	.104,-3
25	.120,-3	-.726,-4	.180,-5	-.370,-4	-.698,-5	-.375,-4	.993,-5	-.946,-5	.452,-4	.918,-4
26	.634,-4	-.416,-4	-.256,-4	-.556,-4	-.309,-4	-.243,-4	.734,-4	.566,-4	-.134,-4	.489,-4
27	.771,-4	-.185,-4	-.693,-4	-.570,-4	-.109,-5	-.104,-5	.514,-4	.446,-4	.122,-4	-.378,-5
28	.726,-4	-.182,-4	-.736,-4	-.661,-6	.144,-4	-.196,-4	.512,-4	.312,-4	.363,-4	.824,-5
29	.577,-4	.152,-4	-.523,-5	.429,-4	.150,-5	-.342,-4	.196,-4	-.770,-4	-.127,-4	-.110,-4
30	.644,-4	.349,-4	.505,-4	.461,-4	-.674,-5	-.992,-4	-.139,-4	-.110,-3	-.367,-4	-.348,-4
31	.808,-4	.130,-4	-.218,-4	.287,-4	.454,-5	-.259,-4	.242,-4	-.371,-4	.186,-4	-.107,-4
32	.897,-4	-.183,-4	-.891,-4	.167,-4	-.219,-4	-.589,-4	.264,-4	-.352,-5	.228,-4	.160,-4
33	.347,-4	-.163,-4	-.332,-4	-.170,-4	-.252,-4	-.195,-4	.596,-4	.184,-4	.135,-4	.506,-4
34	.495,-4	.141,-4	.530,-4	-.384,-5	-.378,-5	.377,-4	.235,-4	-.142,-4	.769,-5	.328,-4
35	.647,-4	-.381,-5	.446,-4	.437,-4	-.121,-4	.354,-4	-.241,-4	-.335,-4	-.357,-5	-.224,-4
36	.627,-4	-.208,-5	.414,-5	.418,-4	.130,-4	.556,-4	.221,-4	-.265,-4	.221,-4	-.530,-5
37	.445,-4	.668,-5	.316,-6	-.143,-4	.221,-4	-.120,-4	.902,-4	-.541,-4	.225,-4	-.784,-5
38	.100,-4	-.485,-5	.123,-4	-.390,-4	.537,-5	-.192,-4	.420,-4	-.50?,-4	-.101,-4	-.718,-4
39	.147,-4	-.677,-5	.114,-4	-.305,-4	-.291,-4	.207,-4	.516,-5	-.351,-4	-.231,-4	-.114,-3
40	.107,-4	-.739,-5	.484,-4	-.148,-4	-.455,-4	.293,-4	-.120,-4	-.569,-4	.148,-4	-.985,-4
41	.261,-4	-.171,-4	.491,-4	.282,-4	-.1??,-4	.130,-4	-.295,-4	-.371,-4	.327,-4	-.660,-4
42	.676,-4	-.448,-4	-.410,-4	.344,-4	-.421,-5	-.128,-4	-.201,-4	-.342,-4	.497,-4	.367,-4
43	.670,-4	-.353,-4	-.771,-4	-.260,-4	-.258,-4	.732,-5	-.215,-4	-.302,-4	.456,-4	.625,-4
44	.114,-3	-.150,-4	-.608,-4	-.416,-4	-.392,-4	.189,-4	.162,-4	.121,-4	-.789,-5	.574,-5
45	.130,-3	-.177,-4	-.264,-4	.107,-4	-.397,-4	.201,-4	.385,-4	-.143 -4	-.417,-4	-.205,-4
46	.781,-4	-.187,-4	-.400,-4	-.533,-5	.175,-4	.411,-4	.243,-4	-.302,-4	-.346,-4	.152,-5
47	.765,-4	-.926,-5	-.351,-4	-.270,-4	.507,-4	.281,-4	.197,-4	-.299,-4	-.159,-4	-.493,-5
48	.581,-4	.110,-4	-.430,-5	-.115,-4	.240,-4	.152,-4	.829,-5	-.312,-4	.157,-4	-.227,-5
49	.842,-4	-.515,-5	-.307,-4	.234,-4	-.176,-4	-.255,-4	-.700,-5	-.349,-4	.180,-4	-.132,-4
50	.114,-3	.107,-4	.193,-5	.178,-4	-.531,-4	-.865,-4	.147,-4	-.283,-4	-.197,-4	-.868,-4
51	.122,-3	.526,-4	.104,-3	.170,-5	-.402,-4	-.555,-4	.144,-4	-.398,-4	-.292,-4	-.119,-3
52	.107,-3	.273,-4	.605,-4	.228,-4	-.190,-4	.241,-4	-.629,-5	-.669,-5	-.696,-5	-.700,-4
53	.566,-4	-.647,-5	-.185,-4	.196,-4	-.316,-4	.339,-4	-.476,-4	-.345,-5	.270,-4	-.261,-4
54	.226,-4	-.171,-4	-.244,-4	-.436,-5	-.318,-4	-.106,-5	-.327,-4	-.128,-4	.231,-4	-.848,-5
55	.557,-4	-.302,-4	-.191,-4	-.297,-4	-.195,-4	-.521,-4	-.773,-5	.125,-4	.124,-4	.205,-4
56	.555,-4	-.339,-4	-.107,-4	-.273,-4	-.917,-5	-.553,-4	-.222,-4	-.135,-5	-.800,-5	.366,-4
57	.245,-4	-.186,-4	.237,-4	.179,-4	-.733,-5	-.321,-4	-.239,-4	-.296,-4	-.227,-4	.176,-4
58	.324,-4	.904,-5	.312,-4	.272,-4	-.183,-4	-.128,-4	-.849,-5	-.175,-5	-.260,-5	-.222,-4
59	.408,-4	.278,-4	-.362,-5	-.407,-5	.769,-5	.179,-4	-.509,-5	.363,-4	.865,-5	-.424,-4
60	.399,-4	.204,-4	-.138,-4	-.120,-4	.274,-4	.282,-4	.186,-5	.193,-4	.985,-5	-.430,-4

Run No. 54 ; u component

N	Separation Distance (m.) 6	12	18	24	36	42	48	72	84	90
00	.305,-1	.197,-1	.187,-1	.169,-1	.180,-1	.249,-1	.281,-1	.547,-2	.132,-1	.281,-1
01	.191,-1	.103,-1	.687,-2	.717,-2	.637,-2	.875,-2	.163,-1	-.114,-2	.458,-2	.144,-1
02	.104,-1	.387,-2	.305,-2	-.164,-2	-.260,-2	.276,-2	.335,-2	.153,-2	-.156,-2	.150,-3
03	.516,-2	.287,-2	.222,-2	-.856,-3	-.277,-2	.252,-2	-.223,-2	.696,-2	-.597,-3	.196,-3
04	-.484,-4	-.367,-3	.590,-4	.293,-3	-.173,-2	-.125,-2	-.326,-2	.279,-2	-.224,-2	.188,-2
05	-.206,-2	-.190,-2	.141,-2	-.610,-3	.137,-2	.135,-2	-.191,-2	-.257,-2	-.103,-2	.138,-3
06	-.108,-2	-.270,-2	.865,-3	-.326,-3	.861,-3	.252,-2	-.277,-2	-.219,-2	.848,-3	-.215,-2
07	.335,-3	-.147,-2	.627,-3	.285,-3	-.127,-3	-.768,-3	-.111,-2	.548,-3	.130,-2	.261,-3
08	.265,-3	-.948,-3	.206,-2	.170,-2	-.299,-3	.167,-3	.745,-3	.124,-2	.241,-2	-.576,-3
09	-.215,-2	-.215,-2	.170,-2	.218,-2	-.305,-3	.724,-3	.158,-2	.759,-3	.274,-2	-.334,-2
10	-.210,-3	-.171,-2	-.205,-2	.753,-3	.705,-3	-.136,-2	.907,-3	.204,-2	.178,-2	-.173,-2
11	.735,-3	.223,-3	-.225,-2	-.163,-3	.150,-2	.746,-3	-.138,-2	.165,-2	.119,-2	.209,-4
12	.219,-3	.106,-2	-.582,-3	.418,-4	.170,-2	.138,-2	-.136,-2	.167,-2	.100,-2	.778,-3
13	.194,-3	-.108,-3	-.322,-3	.642,-3	.562,-3	-.437,-3	.476,-3	.115,-2	.102,-3	.470,-3
14	-.990,-4	-.120,-2	-.922,-3	.148,-2	-.436,-3	-.229,-2	.483,-3	.804,-3	.488,-4	-.415,-4
15	-.529,-3	-.366,-3	-.144,-2	.124,-2	-.180,-3	-.918,-3	.504,-3	.674,-3	-.123,-2	-.145,-4
16	-.816,-3	.318,-3	-.117,-2	.550,-3	.370,-3	.692,-3	.699,-3	.438,-3	-.116,-2	-.612,-3
17	-.152,-2	-.205,-4	-.590,-3	.276,-3	-.836,-4	.175,-2	.855,-3	.221,-3	-.910,-3	-.[illegible],-4
18	-.140,-2	-.641,-4	-.104,-3	.133,-3	-.504,-3	.133,-2	.669,-4	.139,-3	-.358,-3	.463,-3
19	-.721,-3	.430,-4	.197,-3	-.205,-3	-.206,-3	-.530,-3	-.123,-2	.623,-3	.579,-4	.781,-3
20	-.933,-3	.204,-3	-.619,-3	-.391,-3	.290,-3	-.650,-3	-.866,-3	.327,-4	-.255,-4	.760,-3
21	-.732,-3	.748,-3	-.540,-3	-.297,-3	-.403,-3	-.158,-3	.199,-4	-.251,-3	-.696,-3	-.350,-3
22	-.449,-3	.741,-3	-.133,-3	.377,-4	-.133,-2	-.101,-2	.236,-3	.720,-3	-.194,-3	-.248,-3
23	-.271,-3	.570,-3	.470,-4	.621,-3	-.111,-2	-.128,-2	-.232,-3	.783,-3	.855,-3	.217,-3
24	.141,-4	.762,-3	-.261,-3	.774,-3	.107,-3	-.124,-2	.180,-4	-.641,-5	-.104,-4	.973,-4
25	.808,-4	.601,-3	.949,-4	-.893,-4	-.527,-5	-.716,-3	.433,-3	-.290,-3	-.404,-3	-.724,-4
26	.238,-3	-.967,-4	.187,-3	-.459,-3	-.103,-3	-.753,-4	.274,-3	-.101,-3	.655,-4	.194,-3
27	.705,-3	-.421,-3	-.413,-3	-.257,-3	-.223,-3	.302,-3	.396,-3	-.195,-3	.897,-4	.375,-3
28	.616,-3	-.597,-3	-.857,-4	.331,-3	-.501,-3	.234,-4	.405,-3	.243,-4	-.281,-3	-.096,-4
29	.342,-3	-.557,-3	.365,-3	.148,-3	-.112,-3	-.141,-5	.283,-3	.339,-3	-.370,-3	-.397,-3
30	.348,-3	-.852,-4	.233,-3	-.209,-4	.369,-3	.968,-4	.831,-4	.220,-3	-.258,-3	-.583,-3
31	.571,-4	.907,-4	.774,-3	.299,-3	.518,-3	.458,-3	-.248,-3	-.147,-3	- 226,-3	-.630,-3
32	-.595,-3	-.932,-4	.689,-3	.846,-3	.367,-3	.329,-3	.231,-3	-.523,-4	-.215,-3	-.354,-4
33	-.425,-3	-.106,-3	.551,-3	.502,-3	-.967,-4	.450,-3	.287,-3	-.140,-3	.776,-4	-.154,-3
34	.101,-3	-.404,-3	.164,-3	.385,-3	-.422,-3	.524,-3	-.147,-3	-.187,-3	.984,-4	-.242,-3
35	.176,-3	-.512,-3	-.313,-3	.293,-3	-.528,-3	.275,-3	-.143,-3	-.978,-4	.202,-3	-.991,-6
36	.117,-3	-.571,-3	-.156,-3	.507,-3	-.575,-3	-.217,-4	.742,-4	-.269,-3	.126,-3	.153,-3
37	-.332,-4	-.522,-3	.275,-3	.462,-3	-.267,-3	-.360,-3	.333,-4	-.280,-3	-.426,-4	.293,-3
38	-.417,-3	-.366,-3	.486,-3	-.445,-5	-.318,-3	-.236,-3	-.195,-3	-.634,-4	-.743,-4	.142,-3
39	-.350,-3	-.550,-3	.217,-3	.406,-3	-.105,-2	-.110,-3	-.365,-3	.112,-3	-.703,-4	.175,-3
40	-.227,-3	-.458,-3	.197,-3	.322,-3	-.939,-3	-.598,-3	-.585,-3	.672,-4	-.127,-3	.503,-4
41	.108,-4	-.282,-3	.434,-3	-.304,-3	-.155,-3	-.808,-3	-.326,-3	.220,-3	-.647,-5	-.914,-4
42	.597,-4	-.140,-3	.349,-3	-.317,-3	.199,-3	.590,-3	.232,-4	.866,-3	.368,-3	.665,-4
43	-.216,-3	-.113,-3	.848,-4	-.868,-4	-.301,-3	-.468,-5	-.406,-4	.169,-3	.616,-3	.112,-3
44	-.519,-3	-.327,-3	-.734,-4	.101,-3	-.496,-3	.242,-3	-.332,-4	.398,-4	.572,-3	.341,-3
45	-.252,-3	.782,-4	-.127,-3	.126,-3	.863,-4	.101,-3	.177,-3	.179,-3	.222,-3	.364,-3
46	-.299,-3	.415,-3	-.159,-3	.103,-3	.118,-3	-.299,-5	.874,-4	.326,-3	-.166,-3	.188,-3
47	-.377,-3	.265,-3	-.759,-4	.565,-4	-.281,-3	.872,-4	.172,-3	.287,-3	-.135,-3	-.411,-5
48	-.177,-3	-.765,-4	.370,-4	-.125,-3	-.332,-4	.180,-3	.328,-4	.966,-4	.170,-3	-.482,-4
49	.150,-3	-.226,-4	-.632,-4	-.164,-3	.101,-3	-.932,-4	-.857,-4	-.168,-3	.163,-3	.179,-4
50	.327,-3	.197,-3	.191,-3	-.114,-3	-.428,-3	-.193,-3	-.315,-3	-.150,-3	.430,-3	-.135,-3
51	.238,-3	.954,-4	.379,-3	-.635,-4	-.101,-3	-.224,-3	-.205,-3	-.731,-4	.609,-3	-.153,-3
52	.734,-4	.308,-3	.291,-3	-.830,-4	.330,-3	-.256,-3	-.360,-3	-.940,-4	.325,-3	-.119,-3
53	.490,-3	.816,-3	.137,-3	-.116,-3	.113,-3	.267,-3	-.310,-3	-.469,-4	.175,-3	.122,-3
54	.566,-3	.537,-3	.820,-4	-.434,-3	.143,-3	.473,-3	.147,-3	.142,-3	.415,-3	.322,-3
55	.634,-3	-.480,-4	.199,-4	-.390,-3	.311,-3	.234,-3	.205,-3	.268,-3	.298,-3	.318,-4
56	.405,-3	-.316,-3	.593,-5	.827,-4	-.171,-3	-.511,-4	-.109,-3	.353,-3	-.589,-4	-.249,-3
57	.219,-3	-.594,-4	.238,-3	.673,-4	-.539,-3	-.134,-3	.626,-4	.131,-3	-.993,-4	-.821,-4
58	.436,-3	.173,-3	.605,-3	-.401,-3	-.395,-3	-.437,-3	.270,-3	-.182,-3	-.283,-3	-.329,-3
59	.424,-4	.774,-5	.520,-3	-.401,-3	.591,-4	-.118,-3	.112,-3	-.244,-3	-.279,-3	-.386,-3
60	-.183,-3	.326,-4	.266,-3	-.198,-3	.302,-3	.205,-3	.285,-4	-.126,-3	-.209,-3	-.230,-3

Run No. 54 ; v component

N	Separation Distance (m.) 6	12	18	24	36	42	48	72	84	90
00	.911,-2	.683,-2	.820,-2	.846,-2	.797,-2	.853,-2	.586,-2	.583,-2	.572,-2	.671,-2
01	.556,-2	.340,-2	.408,-2	.443,-2	.378,-2	.413,-2	.223,-2	.255,-2	.254,-2	.355,-2
02	.323,-2	.118,-2	.652,-3	.108,-2	-.657,-4	.307,-3	-.410,-3	-.480,-3	-.766,-4	.138,-2
03	.290,-2	.977,-3	.172,-4	.861,-3	-.617,-3	-.810,-3	-.177,-3	.240,-3	-.126,-3	.107,-2
04	.237,-2	.948,-3	-.122,-3	.590,-3	-.854,-4	.227,-3	-.193,-3	.952,-3	-.173,-3	-.224,-3
05	.221,-2	.138,-2	-.124,-3	.205,-3	-.554,-4	-.120,-2	-.567,-3	.940,-3	-.137,-3	-.423,-3
06	.187,-2	.102,-2	-.311,-3	-.298,-3	-.402,-3	.122,-2	-.515,-3	.611,-3	.308,-3	.305,-3
07	.197,-2	-.904,-4	-.593,-3	.134,-3	-.441,-3	.404,-3	-.114,-3	.643,-3	.157,-3	.468,-3
08	.165,-2	-.137,-3	-.492,-3	.368,-3	-.161,-3	-.793,-3	-.414,-3	.494,-3	-.115,-3	-.505,-4
09	.616,-3	.629,-4	-.363,-3	.352,-4	.183,-4	-.957,-3	-.685,-3	.137,-3	-.706,-4	-.304,-3
10	.566,-3	-.491,-3	-.586,-3	-.784,-4	-.276,-3	.359,-3	.121,-3	.170,-4	-.147,-3	-.387,-4
11	.832,-3	-.434,-3	-.800,-3	-.365,-3	-.215,-3	.122,-2	.260,-3	.605,-4	.242,-3	.984,-4
12	.849,-3	.742,-4	-.618,-3	-.308,-3	.576,-4	.595,-3	-.275,-3	-.237,-3	.564,-3	-.426,-4
13	.667,-3	-.108,-3	-.762,-4	.313,-3	-.715,-4	-.219,-3	-.389,-3	-.161,-3	.240,-3	-.363,-3
14	.293,-3	.207,-3	.373,-3	.653,-3	-.110,-3	-.771,-4	-.133,-3	-.159,-3	-.389,-3	-.740,-3
15	.373,-3	.164,-3	.474,-3	.289,-3	.473,-3	.259,-3	.306,-3	-.340,-3	-.511,-3	-.478,-3
16	.677,-3	-.443,-3	-.160,-3	.332,-3	.787,-3	-.160,-3	.352,-3	-.844,-3	-.899,-3	-.144,-3
17	.384,-3	-.241,-3	-.509,-3	.240,-3	.888,-4	-.259,-3	-.497,-3	.977,-4	.811,-4	-.311,-3
18	.181,-3	-.136,-4	.133,-3	.570,-4	.167,-3	-.289,-3	-.289,-3	.291,-4	.725,-4	-.352,-3
19	.261,-3	.310,-4	-.189,-4	.594,-3	.322,-3	.192,-3	.431,-3	.757,-4	-.118,-3	-.118,-3
20	.147,-3	.113,-3	-.167,-3	.561,-3	-.765,-4	.257,-3	.782,-4	-.351,-4	-.270,-3	.217,-3
21	.242,-3	-.159,-3	.532,-3	-.105,-3	-.258,-3	.181,-3	-.455,-3	.223,-3	-.508,-3	-.177,-3
22	.554,-3	-.313,-4	.701,-3	.127,-4	-.160,-3	.391,-3	-.448,-3	.424,-3	-.323,-3	-.307,-3
23	.174,-3	.166,-3	.529,-3	.259,-3	-.238,-4	.240,-3	-.246,-3	.227,-3	.558,-4	.264,-3
24	.180,-3	.323,-3	.435,-3	.196,-3	.116,-3	.385,-3	-.764,-5	-.681,-4	.211,-3	.356,-4
25	.301,-3	.393,-3	.142,-3	.220,-3	-.154,-3	.323,-3	.357,-3	-.344,-3	.360,-4	-.141,-3
26	.304,-3	.212,-3	.461,-3	.550,-3	-.362,-3	.153,-3	.443,-3	-.276,-3	-.162,-3	-.874,-4
27	-.413,-4	.111,-4	.488,-3	.456,-3	-.131,-3	-.616,-5	.560,-4	-.133,-3	.969,-4	-.196,-4
28	-.787,-5	-.144,-3	.324,-3	.170,-3	.130,-3	-.120,-3	.204,-4	-.116,-3	.312,-3	-.234,-4
29	.266,-3	.110,-3	.160,-3	-.914,-4	.136,-3	.468,-4	.325,-3	.821,-5	.259,-3	-.448,-3
30	.369,-3	.167,-3	.463,-4	-.215,-4	.499,-4	-.973,-4	.252,-3	.778,-4	.991,-4	-.637,-3
31	.300,-3	-.507,-4	.379,-3	.192,-4	.160,-3	.598,-4	.153,-3	.102,-3	-.502,-4	-.444,-3
32	.199,-3	.144,-3	.584,-3	.115,-3	.204,-3	.699,-3	.147,-3	-.230,-4	.259,-4	-.212,-3
33	.400,-3	.126,-3	.294,-3	-.281,-4	.212,-3	.597,-3	-.688,-4	-.106,-3	.121,-4	.166,-4
34	.177,-3	-.329,-4	.359,-3	-.104,-3	.167,-3	.125,-3	-.731,-4	-.307,-3	.617,-4	-.147,-5
35	-.423,-4	-.102,-3	.202,-3	.928,-4	-.273,-4	-.224,-4	-.380,-5	-.607,-3	.312,-3	.565,-4
36	.178,-4	.524,-6	.163,-3	.165,-3	.217,-4	.151,-3	.278,-4	-.448,-3	.347,-3	.536,-3
37	.151,-3	.105,-3	.409,-3	.348,-3	.197,-3	.176,-3	-.173,-4	-.112,-3	-.926,-4	.348,-3
38	-.269,-4	-.580,-4	.151,-3	.314,-3	.92[illegible],-4	-.129,-3	-.423,-4	-.234,-3	-.593,-3	.284,-3
39	-.644,-4	-.190,-5	-.359,-3	.297,-3	.163,-3	-.115,-3	.243,-4	-.475,-3	-.542,-3	.282,-3
40	.352,-3	-.124,-3	-.293,-3	.234,-3	-.125,-4	.302,-3	.427,-3	-.260,-3	.267,-3	.124,-3
41	.156,-3	.485,-5	.886,-4	.253,-3	.559,-4	.616,-3	.256,-3	-.927,-4	.409,-3	.101,-4
42	-.186,-3	.671,-4	-.754,-6	.823,-4	.599,-4	.278,-3	-.197,-4	-.226,-3	.396,-4	.110,-3
43	-.743,-4	-.110,-3	-.236,-3	-.203,-3	.365,-4	-.849,-4	.136,-3	-.260,-3	.253,-3	.874,-4
44	-.298,-3	-.330,-3	-.176,-3	-.179,-3	.690,-4	-.660,-4	.361,-4	.215,-4	.339,-3	-.729,-4
45	-.333,-3	-.237,-3	-.268,-3	-.173,-3	.191,-3	-.220,-3	-.153,-3	.592,-4	.412,-5	.162,-3
46	-.295,-3	.657,-4	-.235,-3	-.560,-4	.311,-3	-.257,-3	-.115,-3	.169,-5	-.256,-3	.126,-3
47	-.150,-4	.589,-4	-.154,-3	-.217,-3	.198,-3	-.874,-4	-.477,-4	.228,-3	-.254,-4	-.409,-4
48	.376,-3	-.393,-4	-.208,-3	-.339,-3	.198,-3	.124,-5	-.897,-4	.557,-3	.121,-3	-.157,-3
49	.592,-3	-.580,-4	-.229,-3	-.179,-3	.343,-3	.241,-3	-.693,-4	.351,-3	.585,-4	-.102,-3
50	.203,-3	.127,-3	-.143,-3	.124,-3	.233,-3	.257,-3	-.135,-3	.236,-4	.791,-4	-.736,-4
51	-.106,-4	.160,-3	-.653,-4	.128,-3	-.526,-4	-.984,-4	-.223,-3	.512,-4	.326,-3	-.332,-3
52	-.346,-4	.139,-4	.183,-3	-.112,-3	.275,-4	-.282,-3	-.176,-3	.423,-4	.241,-3	-.544,-3
53	.770,-4	-.235,-3	.106,-3	.200,-3	-.574,-5	.109,-3	-.289,-3	-.224,-3	-.407,-4	-.532,-3
54	.364,-4	-.208,-3	.586,-4	.233,-3	-.258,-3	-.118,-3	-.272,-3	-.992,-4	-.248,-4	-.336,-3
55	-.194,-3	-.384,-4	.981,-5	-.676,-4	-.137,-3	-.124,-3	-.797,-4	.477,-4	-.234,-5	-.189,-4
56	-.284,-3	-.764,-4	-.341,-3	-.375,-4	.682,-4	-.213,-4	.535,-4	.208,-3	-.121,-3	.202,-4
57	-.764,-4	-.135,-3	-.295,-3	.702,-4	-.191,-4	-.182,-4	.990,-4	.224,-3	-.974,-4	-.661,-4
58	.412,-4	.989,-5	-.612,-4	.246,-4	-.108,-3	.163,-3	.227,-3	.985,-5	.295,-4	-.482,-4
59	-.709,-4	.578,-5	.181,-3	.122,-4	-.798,-4	.192,-3	.201,-3	.544,-4	-.887,-4	.147,-4
60	-.164,-3	-.437,-4	.185,-3	-.356,-5	-.119,-3	-.334,-5	.233,-4	.214,-3	-.180,-3	.139,-4

Run No. 55 ; u component

Separation Distance (m.)

N	6	12	18	24	36	42	48	72	84	90
00	.789,-1	.791,-1	.391,-1	.987,-1	.301,-1	.736,-2	.479,-1	.838,-1	.341,-1	.258,-1
01	.916,-1	.848,-1	.432,-1	.667,-1	.423,-1	.126,-1	.411,-1	.473,-1	.241,-1	.235,-1
02	.746,-1	.722,-1	.410,-1	.856,-2	.150,-1	-.836,-2	.287,-1	-.545,-2	-.513,-2	.620,-2
03	.455,-1	.454,-1	.267,-1	.597,-2	-.765,-3	-.172,-1	.204,-1	-.877,-2	-.216,-1	-.539,-2
04	.245,-1	.131,-1	.105,-1	.200,-1	.962,-2	-.733,-2	.327,-1	.376,-2	-.918,-2	.199,-2
05	.126,-1	-.203,-2	.489,-2	.856,-2	.339,-2	-.173,-2	.312,-1	.218,-2	.456,-2	.522,-2
06	.109,-1	-.927,-3	.397,-2	-.243,-2	.832,-3	.734,-2	.119,-1	-.249,-2	-.270,-2	.113,-2
07	.703,-2	-.737,-4	-.359,-2	-.691,-2	-.175,-2	.415,-2	.149,-1	-.125,-2	-.226,-2	.386,-2
08	.528,-2	-.637,-3	-.382,-2	-.471,-2	-.101,-2	.362,-2	.117,-1	.563,-2	-.126,-2	.665,-2
09	.566,-2	.585,-3	.250,-2	-.254,-2	.113,-2	.575,-2	.843,-2	.578,-2	-.619,-2	.700,-2
10	.475,-2	.479,-4	.159,-2	-.308,-2	.212,-2	.160,-2	.393,-2	.127,-2	-.545,-2	.273,-2
11	.542,-2	-.868,-4	.704,-3	-.631,-3	.412,-2	-.759,-3	-.596,-2	-.914,-3	-.360,-2	.277,-3
12	.424,-2	.779,-3	.299,-2	.163,-2	.233,-2	.347,-2	-.609,-2	-.122,-2	-.225,-2	-.221,-2
13	.224,-2	.597,-3	.379,-2	.352,-2	.140,-2	.397,-2	-.239,-2	.140,-2	-.982,-3	-.160,-2
14	.857,-3	.365,-3	.410,-3	.351,-2	.947,-3	.267,-2	.203,-	.167,-2	-.179,-2	.188,-2
15	.811,-3	-.191,-3	-.793,-3	.183,-2	.269,-2	.174,-2	-.264,-3	.172,-2	-.295,-2	.169,-2
16	.142,-2	.209,-3	.936,-3	.180,-2	.437,-2	.245,-2	-.261,-2	.315,-2	-.287,-2	.457,-3
17	.363,-3	.110,-2	.229,-2	-.383,-3	.553,-3	.847,-3	-.247,-2	.536,-3	-.126,-2	-.702,-3
18	-.163,-3	.693,-3	.202,-2	-.300,-2	-.105,-2	-.110,-2	-.192,-2	-.113,-2	.356,-2	-.430,-3
19	.501,-5	.231,-3	.416,-3	-.134,-2	.122,-2	-.542,-3	-.197,-2	-.505,-4	.421,-2	.312,-3
20	-.948,-3	.126,-3	.669,-4	.285,-3	.275,-2	.415,-4	-.366,-3	.190,-3	.163,-2	.489,-3
21	-.105,-2	-.898,-3	-.729,-3	-.203,-3	.195,-2	-.994,-3	.324,-2	-.444,-3	.400,-3	.367,-3
22	.597,-3	-.652,-3	-.152,-2	.143,-2	.559,-3	-.135,-2	.402,-2	-.182,-2	-.741,-3	.156,-3
23	.505,-3	.300,-3	-.107,-2	.227,-2	.180,-2	-.791,-3	.155,-2	-.175,-2	-.234,-2	-.185,-3
24	-.433,-3	.631,-3	.215,-4	.161,-2	.230,-2	.131,-3	-.235,-3	.171,-3	-.162,-2	.546,-3
25	.167,-3	.326,-3	.495,-3	.305,-3	.134,-2	.253,-3	.855,-3	.120,-2	.151,-2	.113,-2
26	.793,-3	.754,-3	-.353,-3	.622,-3	.136,-2	-.117,-3	.226,-2	.212,-2	.284,-2	.771,-3
27	.757,-3	.866,-3	-.172,-3	.761,-3	.580,-3	-.124,-2	.173,-3	.599,-3	.236,-2	.546,-3
28	-.613,-4	.130,-2	.120,-3	.571,-3	.268,-4	-.[illegible],-2	.111,-2	.185,-2	.128,-2	-.210,-3
29	-.869,-3	.408,-3	-.427,-3	.111,-2	-.322,-3	-.209,-2	.298,-2	.348,-2	-.145,-2	-.197,-2
30	-.835,-3	-.121,-2	.600,-3	.607,-3	-.904,-3	-.136,-2	.240,-2	.233,-2	-.346,-2	-.298,-3
31	-.426,-3	-.495,-3	.101,-2	-.447,-3	.272,-3	-.765,-3	.721,-3	.167,-3	-.154,-2	.128,-2
32	.232,-3	.271,-3	.619,-3	-.589,-3	.853,-3	-.501,-3	-.125,-2	-.921,-3	.651,-3	.562,-3
33	.549,-3	-.285,-3	.761,-3	-.558,-4	.161,-3	-.875,-3	-.114,-2	-.112,-2	.653,-3	.837,-3
34	.674,-3	-.231,-3	.102,-2	-.110,-3	.201,-4	-.118,-2	.203,-4	-.819,-3	.234,-3	.417,-3
35	.607,-3	.205,-3	.854,-3	.662,-3	.287,-3	.786,-4	-.255,-3	-.571,-3	.346,-3	-.812,-3
36	.389,-3	-.313,-3	.182,-3	.793,-3	.755,-3	.653,-3	.105,-2	.712,-3	.650,-3	-.495,-3
37	.806,-4	-.124,-2	-.423,-3	.631,-4	.105,-2	.195,-3	.194,-2	.180,-3	.453,-3	-.289,-3
38	.539,-3	-.698,-3	-.383,-3	.640,-4	.110,-2	-.125,-3	.128,-2	-.598,-3	.130,-2	.111,-3
39	.738,-3	-.261,-3	-.141,-3	.618,-3	.218,-3	-.904,-3	.167,-2	-.126,-3	.730,-3	.178,-3
40	.556,-3	.188,-4	.217,-3	.740,-3	-.103,-3	-.992,-3	.183,-2	.109,-2	-.394,-3	.167,-3
41	-.310,-3	-.369,-3	.318,-3	-.330,-3	.273,-3	.135,-3	.633,-3	.141,-2	-.108,-3	.400,-3
42	-.320,-3	-.415,-3	.112,-3	-.550,-3	.320,-3	.159,-3	.207,-4	.229,-3	.343,-3	-.352,-4
43	-.105,-4	-.490,-3	-.151,-4	-.663,-3	.312,-3	-.371,-3	-.902,-4	.148,-3	-.126,-3	-.305,-4
44	-.141,-3	-.600,-3	-.199,-4	-.127,-2	.453,-3	-.159,-3	.267,-3	.527,-3	-.896,-3	.301,-3
45	.184,-3	.620,-4	.196,-3	-.803,-3	-.218,-3	.281,-4	.713,-3	.313,-3	-.534,-3	.617,-3
46	.228,-3	.273,-3	.299,-3	.616,-3	-.446,-3	-.507,-4	.137,-3	-.159,-3	-.760,-3	.252,-3
47	-.487,-4	.161,-3	.129,-3	.897,-3	-.327,-3	-.165,-3	-.277,-3	.437,-4	-.960,-3	.389,-3
48	-.522,-3	.682,-4	.397,-4	.843,-4	.666,-4	.267,-3	.196,-3	.105,-3	-.851,-3	.509,-3
49	-.588,-4	.756,-4	.564,-4	.229,-4	.116,-2	.657,-3	-.463,-4	-.466,-3	-.434,-3	.283,-3
50	-.837,-4	-.983,-5	.303,-3	.135,-3	.151,-2	.880,-3	.404,-3	-.466,-3	-.219,-3	.888,-4
51	-.454,-3	-.289,-3	.294,-3	-.379,-4	.418,-3	.218,-3	.914,-3	-.191,-3	.877,-3	-.296,-3
52	-.359,-3	-.359,-5	-.428,-4	-.349,-6	.100,-3	.184,-4	.179,-2	.633,-3	.201,-2	-.973,-3
53	.477,-4	.267,-3	-.173,-3	.573,-4	.376,-3	.574,-3	.176,-2	.998,-3	.109,-2	-.125,-2
54	.105,-3	.375,-3	-.876,-4	-.217,-3	.654,-3	.887,-3	.758,-3	.201,-3	-.120,-3	-.544,-3
55	-.312,-3	.257,-3	-.238,-3	-.431,-4	.383,-3	.627,-3	.208,-2	.725,-3	.207,-3	-.329,-3
56	-.676,-3	.152,-3	.867,-4	.136,-3	.269,-4	.196,-3	.213,-2	.144,-2	.433,-3	-.573,-3
57	-.787,-3	.198,-3	.284,-3	.700,-4	-.269,-4	-.185,-3	.172,-3	.157,-2	.648,-4	-.195,-3
58	-.637,-3	.343,-3	.298,-3	-.108,-3	-.429,-3	.268,-3	.647,-3	.135,-2	-.667,-3	.406,-3
59	-.573,-3	.547,-3	.118,-3	-.701,-3	-.129,-2	.541,-3	.114,-2	.275,-3	-.754,-3	.972,-4
60	-.476,-3	.414,-3	.158,-3	-.891,-3	-.120,-2	.244,-3	.346,-3	-.641,-4	-.822,-3	-.145,-3

Run No. 55 ; v component

	Separation Distance (m.)									
n	6	12	18	24	36	42	48	72	84	90
00	.129,-1	.143,-1	.133,-1	.185,-1	.172,-1	.159,-1	.282,-1	.107,-1	.947,-2	.102,-1
01	.117,-1	.135,-1	.113,-1	.102,-1	.944,-2	.744,-2	.195,-1	.427,-2	.308,-2	.189,-2
02	.106,-1	.128,-1	.943,-2	.140,-2	.367,-3	-.109,-2	.115,-1	.459,-2	.367,-2	-.102,-4
03	.113,-1	.137,-1	.103,-1	-.206,-2	-.333,-2	-.125,-2	.446,-2	.542,-2	.497,-2	.212,-2
04	.9[illegible],-2	.122,-1	.890,-2	-.190,-2	-.223,-2	-.179,-2	.605,-3	.527,-2	.619,-2	.257,-2
05	.688,-2	.108,-1	.577,-2	-.292,-2	-.283,-2	-.414,-2	-.242,-3	.644,-2	.733,-2	.229,-2
06	.676,-2	.103,-1	.599,-2	-.383,-2	-.450,-2	-.574,-2	[illegible]5,-2	.375,-2	.361,-2	-.314,-4
07	.495,-2	.707,-2	.428,-2	-.214,-2	-.314,-2	-.410,-2	.252,-2	.120,-2	.136,-2	-.131,-2
08	.300,-2	.563,-2	.259,-2	-.750,-3	-.126,-2	-.969,-3	.749,-3	-.567,-3	-.115,-2	-.178,-2
09	.335,-2	.675,-2	.254,-2	-.671,-3	-.109,-2	.104,-2	-.762,-4	-.877,-3	-.243,-2	.250,-3
10	.391,-2	.579,-2	.292,-2	-.974,-3	-.105,-2	.944,-3	.502,-3	-.645,-3	-.123,-2	-.646,-3
11	.334,-2	.467,-2	.254,-2	-.335,-3	.531,-3	.417,-3	.274,-2	-.490,-3	-.971,-3	-.205,-2
12	.291,-2	.486,-2	.191,-2	.630,-3	.155,-2	.957,-3	.270,-2	-.143,-4	.449,-3	-.109,-4
13	.292,-2	.496,-2	.265,-2	.150,-2	.209,-2	.103,-2	.105,-3	.643,-3	.683,-3	.114,-2
14	.894,-2	.512,-2	.376,-2	.104,-2	.105,-2	.546,-3	.878,-4	.223,-2	.131,-2	.131,-2
15	.340,-2	.349,-2	.236,-2	.191,-3	.392,-3	.263,-3	-.818,-3	.208,-2	.805,-3	-.498,-3
16	.167,-2	.205,-2	.993,-3	-.582,-3	-.126,-3	-.186,-3	.583,-3	.150,-2	-.175,-3	-.217,-2
17	.262,-2	.360,-2	.171,-2	-.148,-3	.314,-3	-.613,-3	-.745,-4	.368,-2	.232,-2	-.490,-3
18	.406,-2	.490,-2	.308,-2	.101,-3	.481,-3	-.172,-3	-.199,-2	.287,-2	.205,-2	.659,-3
19	.320,-2	.385,-2	.255,-2	.252,-3	.519,-3	.794,-3	-.113,-2	.194,-4	-.111,-3	-.124,-2
20	.259,-2	.318,-2	.171,-2	-.664,-3	.776,-3	.692,-3	-.117,-3	.976,-3	.175,-2	.448,-3
21	.266,-2	.244,-2	.146,-2	-.729,-3	.104,-2	.292,-3	.318,-3	.870,-3	.122,-2	.113,-2
22	.122,-2	.170,-2	.696,-3	-.161,-3	.131,-3	-.391,-3	.462,-3	.117,-2	-.785,-4	.110,-2
23	.781,-3	.213,-2	.516,-3	-.878,-4	-.968,-3	-.717,-3	.555,-3	.609,-3	-.417,-3	.140,-2
24	.202,-2	.231,-2	.158,-2	.210,-3	-.105,-2	-.138,-2	-.503,-3	.707,-3	.735,-3	.237,-2
25	.169,-2	.175,-2	.157,-2	.934,-3	-.378,-3	-.105,-2	.129,-2	.137,-2	.149,-2	.229,-2
26	.859,-3	.111,-2	.495,-3	.477,-3	-.397,-3	-.535,-3	.161,-2	.668,-3	.449,-3	.105,-2
27	.670,-3	.172,-2	.334,-3	.719,-3	.360,-3	-.225,-3	.415,-3	-.368,-3	-.294,-3	-.795,-3
28	.895,-3	.171,-2	.429,-3	.407,-3	.975,-3	.435,-3	-.404,-3	-.840,-3	.201,-4	-.835,-3
29	.121,-2	.105,-2	.148,-3	-.646,-3	.193,-3	.481,-3	-.777,-3	-.676,-3	.455,-3	-.426,-3
30	.940,-3	.120,-2	-.584,-4	.227,-3	.190,-3	-.189,-3	-.463,-3	-.298,-3	.792,-3	-.115,-2
31	.723,-3	.105,-2	.571,-3	.928,-3	-.508,-3	-.163,-3	-.101,-2	-.954,-3	.620,-3	-.105,-2
32	.109,-2	.461,-3	.446,-3	-.685,-4	-.861,-3	-.102,-3	.763,-4	-.214,-2	.874,-3	-.542,-3
33	.128,-2	.509,-3	.273,-3	-.539,-3	-.426,-3	.126,-3	.[illegible]24,-3	-.196,-2	.447,-3	-.588,-3
34	.145,-2	.700,-3	.640,-3	-.752,-3	-.205,-3	-.266,-3	.[illegible]44,-5	-.277,-4	-.249,-3	-.138,-2
35	.938,-3	.156,-3	.250,-3	-.533,-3	.819,-4	.107,-3	-.852,-3	.115,-2	-.290,-3	-.121,-2
36	.520,-3	.345,-4	-.205,-3	-.196,-3	.785,-3	.499,-3	-.159,-2	.584,-3	-.484,-3	.555,-3
37	-.110,-3	.119,-3	-.177,-3	-.171,-3	.134,-2	-.226,-3	-.138,-2	-.351,-4	-.147,-2	.121,-2
38	.265,-4	.398,-3	-.541,	.159,-3	.958,-3	-.778,-3	-.644,-3	.540,-5	-.158,-2	.[illegible]26,-3
39	.944,-3	.489,-3	-.204, 3	-.220,-3	-.317,-3	-.151,-2	-.347,-3	.417,-3	-.310,-3	.653,-3
40	.182,-2	.579,-3	-.191,-3	-.370,-5	-.105,-2	-.138,-2	-.682,-3	.187,-3	-.623,-3	.647,-3
41	.184,-2	.456,-3	.101,-3	.137,-2	.225,-3	-.527,-3	.875,-3	.123,-2	-.545,-3	.2[illegible],-3
42	.720,-3	-.239,-3	-.109,-3	.160,-2	.131,-3	-.298,-3	.228,-2	.193,-2	.694,-3	.[illegible],-3
43	-.356,-3	-.426,-3	-.254,-3	.491,-3	-.572,-3	.614,-4	.126,-2	.374,-3	-.199,-3	.364[illegible],-5
44	.264,-3	-.571,-3	.124,-3	-.102,-3	-.216,-3	.274,-3	.396,-3	-.100,-2	-.111,-2	-.135,-2
45	.414,-3	-.636,-3	.980,-4	-.490,-3	.459,-3	.465,-4	-.359,-3	-.796,-3	-.214,-2	-.231,-2
46	-.143,-3	-.507,-3	-.813,-3	-.808,-3	.416,-3	.236,-3	-.160,-2	.752,-3	-.171,-2	-.189,-2
47	.455,-3	-.634,-3	-.686,-3	.995,-4	.173,-3	.461,-3	-.165,-2	.455,-3	-.545,-4	-.826,-3
48	.568,-3	-.659,-3	-.392,-3	.575,-3	.126,-3	.936,-4	-.122,-2	-.596,-4	.357,-3	.761,-3
49	.270,-3	-.105,-2	-.787,-3	-.157,-3	.928,-4	-.202,-3	-.428,-3	-.258,-3	.359,-3	.587,-3
50	.290,-3	-.105,-2	-.512,-3	-.788,-3	-.152,-3	-.490,-4	-.454,-3	.487,-3	.449,-3	-.369,-3
51	-.171,-3	-.727,-3	.184,-3	-.539,-3	.245,-3	-.401,-3	-.577,-3	.424,-3	-.224,-3	-.688,-4
52	-.278,-3	-.328,-4	-.353,-3	.238,-3	.560,-3	.123,-3	.296,-3	.182,-3	.311,-3	.387,-3
53	.427,-3	-.275,-3	-.850,-3	.388,-3	.469,-3	.210,-3	.143,-2	.574,-3	.988,-3	.207,-3
54	.359,-3	-.132,-2	-.337,-3	-.524,-5	.347,-3	-.209,-4	.171,-2	.652,-3	.720,-3	.573,-3
55	.300,-4	-.209,-2	-.873,-4	-.404,-3	.701,-3	-.142,-3	.145,-2	.102,-2	.800,-3	.616,-3
56	.785,-4	-.236,-2	-.369,-3	-.705,-3	.110,-2	-.199,-3	.421,-3	-.269,-3	.592,-3	.999,-4
57	-.295,-3	-.105,-2	-.362,-3	-.529,-3	.141,-2	-.411,-3	-.107,-2	-.156,-2	-.410,-3	-.306,-4
58	-.293,-4	-.100,-2	.146,-3	-.531,-3	.118,-2	-.498,-3	-.114,-3	-.101,-2	-.229,-3	.608,-3
59	.725,-3	-.118,-2	-.327,-4	-.109,-3	.349,-3	.124,-3	.137,-2	.425,-3	-.645,-4	-.789,-3
60	.786,-3	-.652,-3	-.361,-3	.428,-4	.851,-4	.338,-3	.875,-3	.841,-3	-.701,-3	-.788,-3

Run No. 56 ; u component

N	Separation Distance (m.) 1	4	5	16	20	21	64	80	84	85
00	.410,-1	.237,-1	.231,-1	.402,-1	.394,-1	.378,-1	.240,-1	.520,-1	.168,-1	.125,-1
01	.471,-1	.571,-2	.999,-2	.271,-1	.300,-1	.281,-1	.179,-1	.251,-1	.123,-1	.456,-2
02	.456,-1	-.769,-2	.193,-2	.981,-2	.165,-1	.123,-1	.146,-1	-.173,-1	.881,-2	.497,-3
03	.365,-1	-.227,-2	.380,-2	-.647,-2	.182,-1	.125,-1	.174,-1	-.176,-1	.870,-2	.509,-2
04	.307,-1	.615,-2	.571,-2	-.934,-2	.221,-1	.177,-1	.174,-1	.623,-3	.571,-2	.485,-2
05	.255,-1	.551,-2	.483,-2	-.499,-2	.147,-1	.915,-2	.815,-2	.289,-2	-.330,-2	-.381,-2
06	.206,-1	-.242,-2	-.163,-3	-.705,-2	.396,-2	-.258,-3	.746,-2	.194,-2	-.336,-2	-.480,-2
07	.172,-1	.308,-3	.179,-2	-.687,-2	-.712,-3	-.254,-2	.127,-1	-.151,-2	-.105,-2	-.343,-2
08	.146,-1	.423,-2	.664,-2	-.113,-2	-.657,-3	-.334,-3	.660,-2	-.977,-3	-.291,-2	-.347,-2
09	.109,-1	.312,-2	.665,-2	.179,-2	.382,-3	-.212,-3	-.154,-2	-.116,-2	-.342,-2	-.439,-2
10	.922,-2	-.551,-3	.278,-2	-.152,-3	-.522,-3	-.101,-2	-.320,-2	-.266,-2	-.180,-2	-.519,-2
11	.743,-2	-.108,-2	.118,-2	-.610,-3	-.101,-2	-.468,-3	-.260,-2	-.533,-3	.192,-2	-.114,-2
12	.786,-2	.360,-3	.291,-2	-.162,-2	.747,-3	-.733,-3	-.125,-2	-.134,-2	.197,-2	.250,-2
13	.748,-2	.436,-3	.249,-2	-.114,-2	.134,-2	-.575,-3	.113,-2	-.370,-2	-.978,-3	.578,-3
14	.596,-2	-.225,-3	-.376,-3	.776,-3	.906,-3	-.775,-3	-.254,-2	-.239,-2	-.262,-2	-.131,-2
15	.556,-2	.313,-3	-.140,-3	.514,-3	.684,-3	-.769,-3	-.408,-2	.378,-3	-.191,-2	-.590,-3
16	.548,-2	.209,-2	.205,-2	-.112,-2	-.106,-2	-.135,-2	-.102,-2	-.219,-3	.753,-3	.120,-2
17	.617,-2	.237,-2	.164,-2	-.151,-2	-.408,-3	-.726,-3	.171,-3	.314,-3	.174,-2	.121,-2
18	.551,-2	.150,-2	.850,-3	-.868,-3	.346,-3	-.434,-4	.316,-4	.132,-2	-.243,-3	-.678,-3
19	.467,-2	-.116,-3	-.692,-3	-.145,-2	-.809,-3	.145,-3	-.197,-3	.897,-3	-.894,-3	-.182,-2
20	.466,-2	.959,-4	.339,-5	-.112,-2	-.242,-2	-.122,-2	.444,-3	.142,-2	.682,-3	-.160,-2
21	.419,-2	.309,-4	.474,-3	.458,-3	-.103,-2	-.344,-3	-.237,-3	.167,-2	-.117,-2	-.278,-2
22	.506,-2	.631,-4	.396,-4	.111,-2	-.363,-3	.345,-4	-.192,-2	-.654,-3	-.139,-2	-.167,-2
23	.451,-2	.711,-3	.933,-4	.561,-3	-.597,-3	-.201,-3	-.194,-2	-.705,-3	.152,-2	.184,-2
24	.339,-2	.883,-3	.861,-3	-.402,-3	-.676,-3	-.621,-3	.205,-5	.149,-2	.102,-2	.109,-2
25	.282,-2	.702,-3	.763,-3	.287,-3	-.765,-3	-.112,-2	.177,-2	.186,-2	-.802,-3	-.763,-3
26	.291,-2	.115,-2	.999,-3	.433,-3	-.122,-3	-.675,-3	.988,-3	.116,-2	-.200,-3	-.243,-3
27	.275,-2	.118,-2	.866,-3	-.330,-3	-.619,-3	-.724,-3	.110,-2	-.175,-3	-.218,-3	.876,-3
28	.185,-2	.715,-3	.151,-3	-.377,-4	-.939,-3	-.497,-3	.185,-2	-.753,-3	-.432,-4	.656,-3
29	.151,-2	-.265,-3	-.444,-4	.204,-3	-.122,-2	-.753,-3	.110,-2	-.117,-3	-.126,-3	-.488,-3
30	.163,-2	-.763,-3	-.297,-3	.322,-3	-.170,-2	-.102,-2	.158,-2	.484,-3	-.566,-3	-.189,-4
31	.152,-2	-.445,-3	-.101,-2	-.289,-3	-.875,-3	-.367,-3	.185,-2	.544,-3	-.336,-3	.441,-3
32	.184,-2	-.912,-3	-.128,-2	-.776,-3	-.985,-4	.152,-4	.140,-2	.370,-3	-.373,-3	.986,-4
33	.218,-2	-.252,-3	-.483,-3	[illegible]-3	-.223,-3	-.314,-3	.286,-3	-.575,-3	-.263,-4	.148,-3
34	.191,-2	.942,-3	.567,-4	-.613,-3	-.592,-3	.160,-3	.161,-3	-.973,-3	.456,-3	.184,-3
35	.160,-2	.373,-3	.121,-3	-.396,-3	-.165,-3	.592,-3	.233,-3	-.353,-3	.364,-3	.565,-3
36	.140,-2	-.230,-3	.915,-4	-.561,-3	.123,-3	-.761,-4	.367,-3	.392,-3	-.164,-3	.448,-3
37	.156,-2	-.404,-3	-.555,-3	-.352,-3	-.136,-3	-.531,-3	.619,-3	.130,-2	-.204,-4	-.289,-3
38	.170,-2	-.533,-3	-.873,-3	-.190,-3	-.214,-3	-.591,-3	.465,-3	.177,-2	-.471,-3	-.733,-3
39	.200,-2	-.157,-6	-.148,-3	-.321,-3	-.893,-4	-.550,-3	.189,-3	.106,-2	-.829,-3	-.485,-3
40	.145,-2	.509,-3	.542,-3	-.668,-3	-.259,-4	-.411,-3	-.469,-3	.121,-3	-.732,-3	.368,-3
41	.768,-3	.530,-3	.442,-3	-.488,-3	-.327,-4	-.451,-3	-.155,-3	-.710,-3	-.118,-3	.795,-3
42	.307,-3	.631,-3	.573,-4	-.272,-3	.276,-3	-.274,-3	.329,-3	-.616,-3	.523,-3	.738,-3
43	.333,-3	.556,-3	.137,-3	-.121,-3	.682,-4	-.650,-4	.692,-3	-.792,-5	.365,-3	.910,-4
44	.961,-3	.286,-3	.151,-3	.379,-4	-.205,-3	-.818,-4	.108,-2	.296,-3	.173,-3	-.273,-3
45	.118,-2	.982,-4	.149,-5	-.106,-3	.653,-4	.204,-3	.225,-3	.241,-3	.404,-3	-.161,-3
46	.782,-3	.194,-3	.383,-3	-.295,-4	.244,-3	.549,-3	-.481,-3	.176,-3	.162,-3	-.530,-3
47	.647,-3	.556,-4	.624,-3	-.109,-3	.338,-3	.198,-3	-.395,-3	.519,-3	-.416,-3	-.644,-3
48	.971,-3	-.367,-3	.165,-3	-.110,-3	.318,-3	.231,-4	.243,-3	.787,-3	-.397,-3	-.105,-3
49	.761,-3	-.159,-3	.113,-3	-.326,-3	.171,-3	.138,-3	.411,-3	.143,-3	-.406,-3	.252,-3
50	.589,-3	.593,-3	.877,-3	.251,-4	.315,-3	-.661,-4	.368,-3	-.136,-3	-.516,-4	.485,-3
51	.568,-3	.672,-3	.716,-3	.490,-4	.339,-3	-.130,-3	.667,-3	.197,-3	.519,-3	.104,-3
52	.305,-3	.393,-3	-.305,-4	-.182,-3	.141,-3	-.348,-3	.878,-3	-.252,-3	.400,-3	-.319,-3
53	.337,-3	.429,-3	.150,-3	-.169,-3	-.215,-3	-.551,-3	.681,-4	-.473,-3	-.105,-3	-.663,-3
54	.525,-3	.406,-3	.529,-3	-.347,-3	-.187,-3	-.151,-3	-.411,-3	-.146,-3	.893,-4	-.576,-3
55	.618,-3	.725,-4	.551,-3	-.115,-3	-.116,-3	-.133,-3	-.230,-3	-.296,-4	.338,-3	-.394,-3
56	.567,-3	.160,-3	.306,-3	.310,-3	-.173,-3	-.325,-3	-.116,-4	.688,-3	-.912,-4	-.482,-4
57	.110,-3	-.921,-4	-.504,-4	.156,-3	.900,-4	-.823,-4	-.490,-5	.526,-3	.816,-4	.711,-3
58	.275,-3	-.643,-3	-.169,-3	-.270,-3	.338,-3	.179,-3	.862,-4	.833,-4	.425,-3	.950,-3
59	.583,-3	-.474,-3	-.221,-3	-.173,-3	.609,-3	.444,-3	-.961,-4	-.808,-4	.311,-3	.733,-3
60	.539,-3	-.177,-3	- 113,-3	.732,-6	.380,-3	.475,-3	-.290,-3	-.280,-3	.220,-3	.489,-3

Run No. 56 ; v component

Separation Distance (m.)

N	1	4	5	16	20	21	64	80	84	85
00	.870,-1	.931,-1	.117	.110	.805,-1	.105	.947,-1	.107	.772,-1	.996,-1
01	.453,-1	.477,-1	.591,-1	.526,-1	.387,-1	.493,-1	.490,-1	.500,-1	.363,-1	.472,-1
02	.962,-2	.947,-2	.107,-1	.250,-1	.568,-3	.126,-2	.787,-2	.213,-2	.110,-2	.162,-2
03	.740,-2	.710,-2	.765,-2	.314,-3	-.199,-2	-.136,-2	.952,-3	-.167,-2	-.725,-3	-.153,-2
04	.604,-2	.441,-2	.445,-2	.116,-2	-.427,-3	-.117,-3	-.174,-2	-.116,-2	.926,-4	-.124,-2
05	.558,-2	.278,-2	.304,-2	.152,-2	.917,-3	.363,-3	-.123,-2	-.561,-3	.158,-2	.371,-3
06	.488,-2	.349,-2	.456,-2	.815,-4	-.367,-4	-.258,-3	-.111,-2	-.229,-3	.158,-2	.971,-3
07	.471,-2	.443,-2	.616,-2	-.126,-2	-.702,-3	-.123,-2	-.158,-2	.159,-2	.155,-2	.142,-2
08	.360,-2	.351,-2	.519,-2	-.198,-2	-.379,-3	-.161,-2	-.653,-3	.296,-3	.157,-2	.588,-3
09	.341,-2	.322,-2	.436,-2	.373,-3	.518,-3	.188,-3	-.106,-2	-.170,-2	.110,-2	-.853,-3
10	.441,-2	.303,-2	.421,-2	.107,-2	.185,-3	.428,-3	-.218,-3	-.153,-2	-.343,-3	-.168,-2
11	.383,-2	.147,-2	.274,-2	.288,-3	-.911,-3	-.112,-2	.146,-2	-.451,-3	-.126,-2	-.105,-2
12	.365,-2	.155,-2	.270,-2	.924,-3	-.378,-3	-.350,-3	-.262,-3	.457,-3	-.137,-2	-.403,-3
13	.380,-2	.115,-2	.257,-2	.369,-4	.370,-4	.795,-3	-.126,-2	.518,-3	-.935,-3	-.771,-3
14	.288,-2	.860,-3	.223,-2	-.673,-3	-.185,-3	.150,-2	.729,-4	-.476,-3	-.895,-3	-.128,-3
15	.202,-2	.984,-3	.101,-2	-.101,-2	-.130,-3	.165,-2	.110,-2	-.620,-3	-.970,-3	.101,-2
16	.203,-2	.125,-3	.196,-3	-.687,-3	.662,-3	.159,-2	-.433,-3	-.266,-3	-.525,-3	.105,-2
17	.140,-2	.997,-4	-.459,-3	.449,-3	.637,-3	-.462,-3	-.220,-3	.130,-2	-.125,-3	.275,-3
18	.102,-2	.768,-3	.178,-3	.197,-2	.649,-3	-.139,-2	.620,-3	.100,-2	-.667,-3	-.137,-2
19	.131,-2	.657,-3	.760,-3	.167,-2	.243,-4	-.916,-3	.738,-3	-.837,-3	-.677,-3	-.126,-2
20	.181,-2	.480,-3	.685,-3	.705,-3	-.538,-3	-.652,-3	.240,-3	-.884,-3	.310,-3	.507,-3
21	.192,-2	.122,-2	.141,-2	.737,-3	.181,-3	.172,-3	.313,-3	-.251,-3	-.259,-4	.177,-3
22	.151,-2	.142,-2	.599,-3	.105,-2	.334,-4	.173,-3	.816,-3	.405,-3	.875,-4	.101,-3
23	.190,-2	.734,-3	.433,-3	.120,-2	-.393,-3	.190,-3	.161,-3	.269,-3	.614,-3	.190,-3
24	.208,-2	-.270,-3	.669,-3	.129,-2	-.493,-3	.294,-3	-.340,-3	.111,-4	.171,-3	-.269,-4
25	.162,-2	-.685,-3	.315,-3	.117,-2	.136,-3	.855,-3	-.336,-3	-.171,-3	-.147,-3	-.288,-3
26	.176,-2	.134,-4	-.636,-3	.527,-3	.544,-3	.122,-2	.468,-3	-.626,-3	-.260,-4	.460,-3
27	.148,-2	-.489,-3	-.110,-2	-.596,-4	.605,-3	.967,-3	.325,-3	-.480,-3	-.312,-3	.749,-3
28	.125,-2	-.381,-3	-.432,-3	.247,-3	.697,-3	.361,-3	-.349,-3	.655,-3	-.684,-3	.822,-3
29	.119,-2	.393,-3	.121,-3	-.472,-4	.332,-3	-.476,-4	-.315,-3	.114,-2	-.188,-3	.791,-3
30	.847,-3	.122,-3	-.297,-3	-.291,-3	-.184,-3	-.414,-4	.116,-3	.864,-3	-.124,-3	.161,-3
31	.424,-3	.481,-3	-.342,-3	.111,-3	-.219,-3	-.391,-3	.142,-3	.818,-3	.758,-4	-.997,-4
32	.558,-3	.934,-3	-.468,-4	.423,-3	-.153,-3	-.905,-3	-.420,-3	-.354,-3	.848,-3	.438,-3
33	.135,-2	.109,-2	.428,-3	.220,-3	.219,-3	-.593,-3	-.578,-4	-.119,-2	.723,-3	.402,-3
34	.920,-3	.680,-3	.192,-3	-.420,-3	.400,-3	106,-3	.183,-4	-.130,-2	.737,-4	.133,-4
35	-.813,-4	-.718,-3	-.732,-4	-.961,-3	.548,-3	-.408,-3	-.454,-3	-.916,-3	-.108,-3	-.194,-3
36	-.732,-3	-.911,-3	.417,-3	-.853,-3	.559,-3	-.265,-3	.234,-3	-.824,-3	-.330,-4	.143,-3
37	-.788,-3	-.973,-4	.743,-3	-.576,-3	.999,-4	-.161,-3	.562,-3	-.838,-3	-.152,-3	.173,-3
38	-.383,-3	.115,-3	.285,-3	-.415,-4	-.252,-3	.339,-3	.145,-3	-.685,-3	.425,-3	-.163,-3
39	-.229,-3	.428,-3	.721,-4	.267,-3	-.976,-4	.645,-3	-.404,-3	-.124,-3	.455,-3	-.185,-3
40	.379,-3	.436,-3	-.348,-3	-.630,-5	.101,-3	.422,-3	-.344,-3	-.177,-3	-.715,-6	.417,-3
41	.604,-3	.731,-4	-.101,-3	.135,-3	-.245,-4	.184,-3	.460,-3	-.232,-3	.196,-3	.799,-3
42	.101,-2	.261,-3	.485,-3	.498,-3	-.223,-5	.242,-3	.374,-3	.165,-3	-.158,-5	.695,-3
43	.617,-3	.439,-3	.369,-3	.599,-3	.106,-3	.136,-3	-.519,-3	.216,-3	-.605,-3	.518,-3
44	.526,-3	.564,-3	-.446,-3	.525,-3	.196,-3	-.135,-3	-.118,-2	-.354,-3	-.706,-3	.129,-3
45	.707,-3	.182,-4	-.978,-3	216,-3	.706,-4	-.141,-3	-.984,-4	-.858,-3	-.519,-3	-.106,-3
46	.374,-3	.221,-3	-.724,-3	-.599,-4	.607,-4	-.197,-3	.472,-3	-.361,-3	-.177,-3	-.417,-3
47	.252,-3	.705,-3	-.604,-3	.159,-3	.291,-3	-.268,-3	-.208,-3	.511,-4	-.239,-4	-.111,-3
48	.470,-3	.142,-3	-.629,-3	.210,-3	.184,-3	-.161,-3	-.207,-3	.310,-3	.830,-4	.885,-4
49	.606,-3	.328,-4	-.306,-3	.412,-4	-.109,-3	-.186,-3	.141,-3	.188,-3	.119,-4	-.551,-4
50	.284,-3	.240,-3	.360,-4	-.116,-3	.597,-4	.147,-4	.101,-3	.499,-4	.297,-4	-.460,-4
51	.619,-3	.140,-3	-.122,-3	-.148,-3	.123,-3	.522,-4	-.283,-3	.190,-3	-.815,-4	.282,-3
52	.614,-3	.149,-3	-.869,-4	-.197,-4	.129,-3	-.140,-3	-.335,-3	.509,-3	.140,-3	.542,-3
53	-.459,-3	.938,-4	-.170,-3	.198,-3	.990,-4	-.499,-4	-.199,-3	.101,-3	.191,-3	.425,-3
54	-.111,-2	.993,-4	-.674,-4	.440,-3	-.689,-4	.196,-3	-.735,-4	-.211,-3	-.206,-3	-.169,-4
55	-.965,-3	.244,-3	.394,-3	.393,-3	-.907,-4	.352,-3	-.870,-4	-.104,-3	.300,-3	-.107,-3
56	-.551,-3	-.312,-3	.707,-3	-.185,-3	-.431,-4	.109,-3	-.220,-3	-.101,-3	.541,-3	.760,-4
57	-.177,-3	-.212,-3	.551,-3	-.180,-3	-.129,-3	.166,-3	-.716,-6	-.110,-3	-.265,-4	.356,-3
58	.279,-4	.571,-4	-.106,-3	.872,-4	-.522,-4	.314,-3	.219,-3	-.415,-3	-.382,-3	.106,-3
59	-.219,-3	-.347,-3	-.279,-3	-.149,-4	.159,-3	.381,-3	.403,-4	-.795,-3	.600,-4	.264,-3
60	-.249,-3	-.581,-3	.109,-3	.228,-4	.205,-3	.543,-3	-.484,-4	-.704,-3	.364,-3	.214,-3

Run No. 58 ; u component

Separation Distance (m.)

N	1	4	8	16	20	21	64	80	84	85
00	.167,-2	.120,-2	.131,-2	.612,-3	.688,-3	.586, 3	.110,-2	.114,-2	.272,-2	.191,-2
01	.122,-2	.630,-3	.742,-3	.272,-3	.446,-3	.544,-3	.609,-3	.122,-3	.153,-2	.972,-3
02	.740,-3	.175,-3	.938,-4	-.190,-3	.311,-3	.686,-3	.277,-3	-.643,-3	.373,-3	.263,-3
03	.495,-3	.168,-3	-.186,-3	-.301,-3	.105,-3	.320,-3	.402,-3	.564,-4	.145,-3	.146,-3
04	.555,-3	.287,-3	.484,-5	-.280,-3	-.307,-3	-.280,-3	.367,-3	.156,-3	.150,-3	-.470,-4
05	.742,-3	.372,-3	.519,-3	-.180,-3	-.335,-3	-.154,-3	.117,-3	.520,-3	.510,-3	.170,-3
06	.581,-3	.198,-3	.316,-3	.174,-3	-.155,-3	-.498,-4	.254,-3	.650,-3	.318,-3	-.293,-4
07	.386,-3	-.135,-3	-.287,-3	.139,-3	-.110,-3	-.161,-3	.163,-3	.132,-3	.132,-3	-.208,-3
08	.315,-3	-.325,-3	-.814,-4	-.807,-4	-.501,-4	-.148,-3	-.155,-3	-.143,-3	.726,-4	-.465,-3
09	.188,-3	-.479,-3	-.101,-3	-.543,-3	.223,-3	.243,-3	-.445,-4	-.129,-3	-.656,-4	-.110,-3
10	.132,-4	-.416,-3	-.193,-4	-.680,-3	.915,-4	.199,-4	-.715,-4	.104,-3	.123,-4	-.258,-4
11	-.562,-4	-.269,-3	.271,-3	-.112,-3	-.248,-3	-.289,-3	.304,-3	-.198,-4	-.356,-4	-.453,-3
12	.819,-4	-.198,-3	-.299,-5	.145,-3	-.174,-3	-.227,-3	.295,-3	-.346,-3	.116,-3	-.109,-3
13	.170,-3	-.339,-4	-.114,-3	-.756,-4	-.126,-3	-.118,-3	.150,-3	-.416,-3	.310,-3	.720,-4
14	.994,-4	.196,-3	.594,-4	-.112,-3	-.224,-3	-.114,-3	.262,-3	-.144,-3	.189,-3	-.484,-3
15	.158,-3	.371,-3	.857,-4	.410,-4	-.145,-3	-.153,-4	.121,-3	.630,-5	-.595,-4	-.419,-3
16	.172,-3	.165,-3	-.290,-4	.225,-3	-.160,-3	.204,-5	-.254,-3	.119,-3	-.151,-4	-.169,-3
17	.193,-3	.214,-3	.[illegible],-4	.147,-4	-.261,-3	-.427,-4	-.121,-3	.400,-3	.172,-3	.418,-4
18	.235,-3	.154,-3	.208,-3	-.164,-3	-.227,-3	.626,-4	.248,-3	.439,-3	-.432,-4	.310,-3
19	.174,-4	-.560,-4	.785,-4	-.902,-4	-.765,-4	.451,-4	.649,-4	.189,-3	-.157,-3	.214,-3
20	-.155,-3	-.460,-4	-.101,-3	.500,-4	-.654,-4	.335,-4	-.174,-3	-.445,-3	-.134,-3	.392,-3
21	-.868,-4	.107,-3	-.326,-4	.886,-4	-.105,-3	.636,-4	.137,-4	-.564,-3	-.411,-3	.419,-3
22	-.104,-3	.121,-3	.340,-4	-.954,-4	-.414,-4	-.291,-4	.153,-3	-.197,-3	-.284,-3	.555,-4
23	-.197,-3	.822,-4	.859,-5	-.146,-3	.156,-4	-.224,-3	-.830,-4	.148,-4	.906,-5	-.162,-3
24	-.103,-3	-.448,-4	.458,-4	-.159,-3	.262,-4	-.194,-3	-.179,-3	-.171,-5	.979,-4	-.138,-3
25	.107,-3	-.219,-3	.848,-4	-.144,-3	.637,-4	.131,-3	.202,-4	-.210,-3	.211,-3	.106,-3
26	.634,-4	-.154,-3	.112,-4	-.104,-3	.144,-3	.114,-3	.159,-3	-.217,-3	.187,-3	-.622,-5
27	-.597,-5	-.254,-4	.249,-4	.146,-4	.286,-4	.304,-4	-.639,-4	.752,-4	-.477,-4	-.322,-3
28	.250,-4	-.137,-4	-.680,-4	-.147,-3	-.108,-3	.897,-4	-.100,-3	.289,-3	-.236,-3	-.143,-3
29	.631,-4	.173,-4	.553,-4	-.259,-3	-.161,-4	.184,-4	-.126,-3	.199,-4	-.124,-3	.235,-4
30	.782,-4	.538,-4	.207,-3	-.157,-3	.109,-3	-.678,-4	-.127,-3	-.111,-3	-.145,-4	-.415,-4
31	.311,-4	.794,-5	.116,-3	.995,-5	.138,-3	.173,-4	.965,-4	-.636,-4	.515,-4	-.201,-3
32	-.814,-5	-.605,-4	.124,-3	.139,-4	.229,-4	.188,-3	.137,-3	-.114,-3	.652,-4	-.117,-3
33	-.331,-4	-.873,-4	.164,-3	-.321,-4	-.120,-3	.182,-3	-.645,-4	.188,-4	.191,-4	-.403,-4
34	.661,-5	-.949,-4	.354,-4	-.746,-4	-.114,-3	.923,-4	-.173,-3	.240,-5	.184,-3	-.108,-3
35	.220,-4	-.155,-4	-.257,-4	-.231,-4	-.930,-4	.179,-5	-.105,-3	.190,-3	.369,-3	-.21[illegible],-4
36	-.292,-4	.134,-3	-.580,-4	-.890,-4	-.798,-4	-.825,-4	-.577,-4	.141,-4	.208,-3	.842,-4
37	-.643,-4	.108,-3	-.149,-3	-.803,-5	.307,-4	-.973,-4	-.225,-4	-.206,-3	-.348,-4	-.876,-5
38	-.253,-4	.481,-4	-.151,-3	.944,-4	.776,-4	-.357,-4	.540,-4	-.584,-4	-.233,-4	-.383,-4
39	.297,-4	-.291,-4	-.670,-4	.451,-4	.307,-4	.540,-4	.179,-3	.288,-4	.127,-4	.744,-5
40	.787,-4	-.533,-4	.216,-5	.238,-4	.339,-4	.202,-4	.201,-3	-.486,-4	-.340,-4	.522,-4
41	.145,-4	-.379,-4	-.192,-4	.368,-4	.531,-5	-.876,-5	.138,-3	-.138,-3	.235,-5	.900,-4
42	.191,-4	-.131,-4	-.793,-4	.103,-3	-.755,-4	-.650,-4	.136,-3	.481,-4	-.318,-4	.165,-3
43	.157,-4	-.361,-4	-.252,-4	.902,-4	-.922,-4	-.385,-4	.148,-3	.129,-3	.381,-4	.101,-3
44	-.365,-4	-.195,-4	.106,-3	.208,-4	-.685,-4	.342,-4	.250,-4	-.414,-4	.173,-3	.707,-4
45	.176,-4	-.183,-4	.219,-3	.405,-4	.422,-5	.195,-4	-.286,-4	-.697,-4	.204,-3	.626,-4
46	.291,-4	-.851,-4	.193,-3	.405,-4	.198,-4	.187,-4	.228,-4	-.716,-4	.106,-3	.122,-3
47	-.351,-5	-.697,-4	.123,-3	-.567,-4	.136,-4	.232,-5	.875,-4	-.164,-3	.368,-4	.102,-3
48	-.422,-4	-.469,-5	.113,-3	-.114,-4	.116,-4	-.361,-4	.471,-4	-.208,-3	.211,-5	.689,-4
49	-.751,-4	.250,-4	.102,-3	-.165,-4	.184,-4	-.649,-4	.455,-4	-.223,-3	-.198,-4	.425,-4
50	-.555,-4	-.233,-5	.649,-4	-.761,-4	.252,-4	-.113,-4	.625,-4	-.241,-3	.641,-4	-.530,-5
51	-.445,-4	.193,-5	.451,-4	-.763,-4	-.233,-4	.420,-4	.505,-4	-.156,-3	.292,-4	-.299,-4
52	-.318,-4	.136,-4	.227,-5	-.447,-4	-.429,-4	.726,-4	.595,-4	-.119,-4	-.635,-4	.323,-4
53	.248,-4	.122,-6	-.296,-4	-.120,-4	-.189,-4	.681,-4	.386,-4	.469,-4	-.132,-4	-.301,-4
54	.584,-4	.818,-5	-.187,-4	.242,-4	-.324,-4	.351,-4	.219,-4	.659,-4	.720,-4	-.832,-5
55	.328,-4	-.501,-6	-.141,-5	.182,-4	-.264,-4	.321,-4	-.220,-4	-.709,-4	.114,-3	.434,-4
56	.277,-4	.278,-4	-.243,-4	-.425,-4	-.146,-4	.665,-4	-.205,-4	-.199,-3	.180,-4	.108,-3
57	.150,-4	.385,-4	-.405,-4	-.651,-4	-.435,-4	.930,-4	-.489,-4	-.100,-3	-.644,-5	.162,-3
58	-.526,-5	.440,-4	.847,-4	-.847,-5	-.864,-5	.219,-4	-.291,-4	.570,-4	.572,-4	.311,-4
59	-.666,-4	.505,-4	.126,-3	.229,-4	.204,-4	.283,-4	.869,-4	.883,-4	.628,-4	.213,-5
60	-.687,-4	.225,-4	.712,-4	-.163,-4	.311,-5	.233,-4	.100,-3	.555,-4	.318,-4	.271,-4

Run No. 53 ; v component

Separation Distance (m.)

#	1	4	5	16	20	21	64	80	84	85
00	.287,-2	.238,-2	.191,-2	.155,-2	.186,-2	.156,-2	.569,-3	.118,-2	.211,-2	.934,-3
01	.147,-2	.123,-2	.829,-3	.613,-3	.115,-2	.946,-3	.200,-3	.606,-3	.112,-2	.332,-3
02	.292,-3	.180,-3	-.364,-5	-.192,-3	.218,-3	.142,-3	.210,-3	.271,-3	.211,-3	-.592,-5
03	.152,-3	.176,-4	.167,-4	.201,-3	-.135,-3	-.194,-3	.523,-3	.517,-3	.122,-3	-.501,-4
04	.164,-3	.210,-3	.632,-4	.516,-3	-.901,-4	-.667,-4	.539,-3	.108,-3	.878,-4	-.165,-4
05	.227,-3	.446,-3	.347,-3	.344,-3	-.108,-3	-.305,-4	.269,-3	-.633,-3	.141,-3	.174,-3
06	.886,-4	.221,-3	.240,-3	.125,-3	-.210,-3	-.270,-3	.631,-4	-.617,-3	.201,-3	.156,-3
07	.153,-3	.247,-3	.231,-3	-.748,-4	-.222,-3	-.289,-3	-.335,-3	.345,-4	-.129,-3	.152,-3
08	.311,-3	.521,-3	.358,-3	-.337,-3	-.373,-3	-.189,-3	-.545,-3	.841,-4	-.197,-3	.234,-3
09	.170,-3	.453,-3	.134,-3	-.324,-3	-.293,-3	-.210,-4	-.153,-3	-.324,-3	-.907,-4	.366,-3
10	.310,-4	.190,-3	-.756,-4	-.321,-3	.573,-5	-.315,-4	.680,-5	-.424,-4	-.907,-4	.211,-3
11	.113,-3	-.118,-3	-.275,-3	-.160,-3	.140,-3	-.121,-3	-.911,-4	.215,-3	-.211,-3	.193,-3
12	.111,-3	-.154,-3	-.302,-3	.218,-4	.709,-5	-.178,-3	-.420,-5	.394,-3	-.358,-3	-.154,-4
13	.157,-3	-.248,-4	-.269,-3	.157,-3	-.503,-4	-.652,-4	.521,-4	.313,-3	-.391,-3	-.235,-3
14	.322,-3	-.261,-4	-.211,-3	.428,-4	.160,-4	-.310,-4	.771,-4	.137,-3	-.285,-3	-.105,-3
15	.993,-4	-.616,-4	-.193,-3	-.180,-3	.163,-3	.206,-5	.804,-4	.176,-3	-.883,-4	.165,-3
16	-.105,-3	.162,-3	-.237,-3	-.185,-3	.251,-3	.102,-3	.183,-3	.105,-3	.158,-3	.125,-3
17	.142,-4	.252,-3	-.269,-4	-.186,-4	.123,-3	.839,-4	.145,-3	-.165,-3	.911,-4	.293,-4
18	.243,-3	.256,-3	.915,-4	.830,-4	.256,-3	.650,-4	-.840,-4	-.312,-3	-.103,-3	-.213,-4
19	.238,-3	.556,-4	-.120,-6	.985,-4	.209,-3	.467,-4	-.683,-4	-.111,-3	-.655,-4	-.402,-4
20	.871,-4	-.182,-3	-.326,-4	-.175,-4	.136,-3	-.140,-3	-.322,-4	.115,-3	-.210,-3	-.367,-4
21	-.133,-3	-.200,-3	.227,-4	-.234,-4	.223,-3	-.326,-3	-.949,-5	.162,-3	-.202,-3	.119,-4
22	-.223,-3	-.808,-4	-.375,-4	.585,-4	.182,-3	-.250,-3	.769,-4	.895,-4	-.148,-4	-.444,-4
23	-.426,-4	-.854,-4	-.142,-3	.916,-4	.689,-4	-.952,-4	.157,-4	.807,-4	.104,-3	-.104,-3
24	.940,-4	-.316,-3	-.812,-4	.162,-4	.788,-4	.715,-4	-.420,-4	.249,-3	-.237,-3	-.857,-4
25	-.358,-4	-.253,-3	.457,-4	.836,-4	.306,-4	.693,-5	.656,-4	.395,-3	-.356,-3	.526,-4
26	-.116,-3	-.525,-4	.451,-4	.594,-4	-.241,-4	-.108,-3	-.193,-4	.258,-3	-.786,-4	.129,-3
27	-.117,-3	.449,-4	.653,-4	-.124,-3	-.487,-4	-.532,-4	-.138,-3	.342,-3	-.608,-4	.833,-4
28	.533,-4	.238,-4	.110,-3	-.248,-3	-.236,-3	-.132,-3	-.113,-3	.244,-3	.951,-4	.121,-3
29	.392,-3	.346,-4	.300,-4	-.129,-3	-.409,-3	-.219,-3	-.696,-4	-.524,-6	.188,-3	.188,-3
30	.251,-3	.116,-3	.477,-4	-.706,-4	-.229,-3	-.105,-3	-.114,-4	-.173,-4	.187,-4	.184,-3
31	-.124,-4	.728,-4	.291,-5	-.851,-4	-.857,-4	-.966,-5	.736,-4	.294,-3	-.175,-3	.122,-3
32	-.561,-4	.200,-4	-.105,-4	-.388,-4	-.973,-4	-.441,-4	-.378,-4	.364,-3	-.608,-4	.190,-3
33	.155,-4	.125,-3	.725,-4	-.646,-4	-.186,-3	-.984,-4	.262,-4	.328,-4	-.648,-4	.398,-4
34	.205,-3	.883,-4	.184,-3	-.797,-4	-.225,-3	-.105,-3	.563,-4	-.666,-4	-.128,-3	-.977,-4
35	.267,-3	.626,-5	.198,-3	-.793,-4	-.826,-4	-.284,-4	-.743,-4	-.565,-5	-.195,-4	-.117,-3
36	.221,-3	-.673,-4	.211,-4	.396,-5	.592,-4	.101,-3	.471,-4	-.835,-4	.246,-3	.148,-3
37	.117,-3	-.736,-4	-.113,-3	.286,-4	.766,-4	.929,-4	.151,-3	-.744,-4	.180,-3	.242,-3
38	.206,-4	-.341,-4	-.807,-4	.246,-4	.824,-4	-.364,-4	.955,-4	-.773,-4	.547,-4	.949,-4
39	.165,-4	.504,-4	.331,-4	.770,-4	.181,-4	-.296,-4	.999,-4	-.136,-3	-.922,-4	.190,-4
40	-.104,-3	.777,-4	.220,-4	.414,-4	-.536,-4	.713,-4	.140,-3	-.124,-4	-.247,-3	.858,-4
41	-.141,-3	.104,-4	-.115,-3	-.434,-4	-.297,-4	.218,-4	.128,-3	.977,-4	-.149,-3	-.246,-4
42	.307,-4	-.319,-4	-.124,-3	-.155,-4	-.405,-4	-.420,-4	-.149,-4	.280,-4	.107,-4	-.304,-4
43	.315,-4	-.453,-4	-.143,-5	-.246,-4	-.107,-3	.251,-4	-.144,-3	.811,-4	.226,-4	.744,-5
44	-.480,-4	.766,-4	-.336,-4	-.107,-3	-.141,-3	.815,-4	-.117,-3	.118,-3	.677,-4	-.276,-3
45	-.431,-4	.147,-3	.183,-4	-.103,-3	.148,-5	-.279,-4	-.289,-4	-.600,-5	.435,-4	-.221,-3
46	-.126,-3	.425,-4	.163,-4	-.593,-4	.119,-3	-.590,-4	.113,-3	-.376,-4	.167,-3	-.372,-4
47	-.218,-3	-.558,-4	-.515,-4	-.665,-4	.814,-4	-.826,-5	.167,-3	.122,-4	.213,-3	-.194,-5
48	-.777,-4	-.708,-4	-.222,-4	-.560,-4	-.178,-4	.088,-4	.744,-4	-.729,-4	.162,-3	.131,-3
49	.347,-5	.547,-4	-.377,-4	.871,-4	-.349,-4	-.470,-5	-.137,-4	-.545,-4	.188,-3	.106,-3
50	.358,-4	.487,-4	-.116,-3	.319,-3	-.247,-4	-.985,-4	.345,-4	.200,-3	.107,-3	.553,-4
51	.296,-4	.247,-4	-.302,-4	.217,-3	-.886,-4	-.311,-4	.360,-4	.174,-3	.968,-4	.168,-3
52	-.658,-4	.892,-5	.511,-4	.103,-3	-.595,-4	-.190,-4	-.523,-4	-.107,-4	.163,-3	.559,-4
53	.209,-5	.461,-4	.113,-3	.983,-4	.566,-4	-.818,-4	-.655,-4	-.574,-4	.212,-3	-.124,-3
54	.121,-3	.561,-4	.131,-3	.156,-4	.185,-4	-.429,-4	.213,-4	-.134,-3	.852,-4	-.243,-3
55	.902,-4	.557,-4	.223,-4	.604,-6	-.284,-4	.101,-4	-.534,-5	-.285,-3	.179,-5	-.942,-4
56	.334,-4	-.988,-6	-.220,-4	.580,-4	-.248,-4	-.791,-4	-.138,-3	-.101,-3	-.805,-4	.759,-4
57	-.526,-4	.214,-4	-.321,-6	.431,-4	.818,-5	-.221,-3	-.619,-4	.905,-4	-.455,-4	.456,-4
58	-.234,-3	.885,-4	-.183,-4	-.225,-4	.624,-4	-.117,-3	-.327,-4	.709,-4	.312,-4	-.676,-5
59	-.347,-3	.487,-4	-.749,-4	.411,-4	.617,-4	-.286,-4	-.921,-4	-.321,-4	.755,-4	.198,-4
60	-.231,-3	.337,-4	-.484,-4	.884,-4	.894,-4	.464,-5	-.777,-4	-.402,-4	.625,-4	-.274,-5

Run No. 59 ; u component

	Separation Distance (m.)									
N	1	4	8	16	20	21	64	80	84	85
00	.883,-2	.390,-2	.350,-2	.602,-2	.815,-2	.700,-2	.372,-2	.317,-2	.330,-2	.192,-2
01	.581,-2	.109,-2	.108,-2	.414,-2	.393,-2	.568,-2	.155,-2	.243,-2	.135,-2	.283,-3
02	.255,-2	-.132,-2	-.123,-2	.162,-2	-.996,-3	.241,-2	-.839,-3	.157,-2	-.917,-4	-.161,-2
03	.307,-2	-.569,-3	-.303,-3	.106,-3	.247,-3	-.161,-3	.398,-3	.664,-3	.660,-5	-.108,-2
04	.343,-2	-.182,-4	-.527,-3	-.016,-3	.105,-2	.720,-3	.744,-3	.151,-3	.512,-3	.139,-3
05	.242,-2	.460,-3	-.682,-3	-.396,-3	-.142,-3	.145,-3	.244,-3	.478,-3	-.200,-5	-.409,-3
06	.190,-2	-.139,-3	-.836,-3	.448,-4	.406,-4	-.928,-3	.677,-3	.766,-3	-.100,-2	-.117,-2
07	.224,-2	-.122,-2	-.785,-3	-.389,-3	.417,-3	.416,-3	.156,-2	.258,-3	-.796,-3	-.701,-3
08	.280,-2	-.103,-2	.176,-4	-.667,-3	-.558,-3	.488,-3	.169,-2	-.518,-4	-.647,-3	-.418,-3
09	.352,-2	-.386,-3	.615,-3	-.724,-3	-.191,-2	-.370,-3	.985,-3	-.171,-3	-.570,-3	-.611,-3
10	.246,-2	-.179,-3	.183,-3	-.980,-3	-.104,-2	.788,-3	-.152,-3	-.321,-3	.180,-3	.160,-3
11	.106,-2	-.371,-3	-.157,-3	-.495,-3	.154,-3	.185,-3	-.149,-3	-.249,-3	.117,-3	.347,-3
12	.926,-3	-.338,-3	-.239,-3	-.145,-3	-.220,-3	-.970,-3	-.142,-3	-.487,-3	.231,-3	-.344,-3
13	.156,-2	-.377,-3	-.361,-3	.898,-3	-.459,-3	-.777,-3	-.259,-3	-.728,-3	.305,-3	-.805,-3
14	.208,-2	.152,-3	.207,-3	.106,-2	.294,-4	-.430,-3	.174,-5	-.390,-3	-.160,-3	-.692,-3
15	.130,-2	.713,-5	-.421,-5	.305,-3	-.353,-3	.110,-3	.272,-3	.135,-3	-.240,-3	-.401,-3
16	.999,-3	.297,-4	-.252,-3	-.236,-5	-.116,-2	-.154,-3	-.115,-3	.222,-3	.303,-3	-.219,-3
17	.127,-2	.303,-3	-.162,-3	.695,-3	-.815,-3	-.324,-3	-.273,-3	.198,-3	.121,-3	-.175,-3
18	.116,-2	.521,-3	-.333,-3	.348,-3	-.563,-3	-.263,-3	.537,-4	-.284,-4	-.176,-3	-.205,-3
19	.476,-3	.144,-3	-.503,-3	.210,-3	-.780,-3	-.495,-3	.175,-3	-.391,-3	-.132,-3	-.123,-3
20	.202,-3	-.103,-3	-.498,-3	.289,-3	-.348,-3	-.526,-3	-.286,-3	-.271,-3	-.949,-4	.749,-4
21	.374,-4	.146,-3	.370,-5	.277,-3	.823,-4	-.429,-4	-.340,-3	-.161,-3	-.367,-3	.195,-3
22	.239,-3	.118,-3	.220,-3	.205,-3	-.153,-3	.693,-4	.160,-3	-.131,-4	-.382,-3	.273,-3
23	.510,-3	.109,-3	-.617,-4	-.393,-6	-.463,-3	.167,-3	.200,-3	.160,-3	-.401,-4	.352,-3
24	.355,-3	.152,-4	.666,-4	-.241,-3	-.327,-3	.542,-3	.228,-3	-.798,-4	.206,-3	.215,-4
25	.258,-4	-.202,-4	.256,-3	.224,-4	-.192,-3	-.748,-4	.444,-3	-.359,-3	.144,-3	-.180,-3
26	-.158,-3	-.167,-3	.606,-4	.203,-3	-.157,-3	-.270,-3	.190,-3	-.298,-3	.105,-3	.151,-3
27	-.248,-3	-.145,-3	-.203,-4	-.179,-3	-.960,-4	.213,-3	.167,-3	-.197,-3	.499,-4	.205,-3
28	-.387,-4	.490,-4	.138,-5	-.112,-3	-.150,-4	.343,-3	.429,-3	.122,-4	-.331,-4	.614,-4
29	.271,-3	.251,-3	-.104,-3	.564,-4	.961,-5	-.191,-4	.256,-3	-.110,-3	-.296,-3	-.102,-3
30	.260,-3	.258,-3	-.236,-3	-.127,-3	.145,-4	-.201,-3	-.339,-5	-.278,-3	-.115,-3	.758,-4
31	.409,-4	.147,-3	-.139,-3	-.807,-4	.172,-3	-.119,-3	-.829,-5	-.391,-4	.162,-3	.126,-3
32	-.812,-5	-.115,-3	-.152,-3	.110,-3	.226,-3	-.395,-4	-.726,-4	-.600,-4	.329,-4	-.968,-4
33	-.113,-3	-.350,-3	.642,-4	.109,-3	.258,-3	.700,-4	-.691,-4	-.197,-3	-.936,-4	-.206,-3
34	-.263,-4	-.170,-3	.328,-3	.234,-3	-.144,-4	.910,-4	.119,-3	.415,-4	-.141,-3	-.777,-4
35	.225,-3	-.217,-4	.247,-3	.159,-3	-.142,-3	.369,-4	.246,-3	.156,-3	-.137,-4	.109,-3
36	.161,-3	.879,-5	.174,-3	-.229,-4	-.155,-4	-.946,-4	.167,-3	-.573,-4	.297,-4	-.139,-4
37	-.523,-4	.385,-5	.974,-5	.424,-4	-.155,-3	-.139,-3	.439,-4	.920,-4	-.889,-4	-.104,-3
38	-.226,-3	-.116,-3	.260,-4	.167,-3	-.259,-3	-.821,-4	.536,-5	.229,-3	-.105,-3	-.236,-3
39	-.321,-3	-.139,-5	.183,-3	.164,-3	-.226,-3	-.341,-5	-.158,-3	.115,-3	.875,-5	-.599,-3
40	-.332,-3	.465,-4	.189,-3	.202,-3	-.902,-4	.114,-3	-.109,-3	.167,-4	-.110,-3	-.138,-3
41	-.169,-3	.679,-4	.176,-3	.182,-3	.127,-4	.181,-3	-.779,-5	-.520,-4	.100,-3	-.725,-6
42	-.792,-4	-.192,-4	.116,-3	-.131,-3	-.261,-4	.195,-3	.230,-3	-.125,-3	-.949,-4	-.799,-4
43	-.940,-4	-.162,-3	-.135,-4	-.267,-3	-.305,-4	.285,-3	.433,-3	-.902,-4	-.241,-3	.715,-4
44	.179,-4	-.136,-3	-.139,-4	-.239,-3	.190,-3	.245,-3	.308,-3	-.611,-4	-.143,-3	.668,-4
45	-.110,-3	-.176,-4	.160,-4	-.188,-3	.166,-3	.565,-4	.181,-3	-.148,-3	.130,-4	-.572,-4
46	-.133,-3	.639,-4	.681,-4	-.134,-3	.470,-4	-.102,-3	.805,-4	-.112,-3	.166,-4	-.464,-4
47	-.643,-4	.458,-4	.146,-3	-.207,-3	.510,-4	-.114,-3	.578,-4	-.735,-4	-.469,-4	-.205,-4
48	-.136,-4	.570,-4	.139,-3	-.254,-3	.930,-4	-.424,-4	.157,-3	-.137,-3	-.133,-3	.420,-4
49	.120,-4	.503,-4	.317,-4	-.149,-3	.219,-4	.529,-4	.117,-3	-.856,-4	-.131,-3	-.462,-4
50	.103,-4	.667,-4	-.697,-4	-.465,-5	.173,-4	.127,-4	-.498,-5	-.795,-4	-.106,-3	-.102,-3
51	-.275,-4	-.226,-4	-.213,-4	.101,-3	.998,-5	.876,-4	.330,-4	-.701,-5	-.552,-4	.503,-4
52	.258,-4	-.119,-3	.104,-4	.180,-4	-.512,-4	.165,-3	.213,-3	-.558,-4	-.947,-4	.525,-4
53	.486,-4	-.120,-3	-.124,-3	-.638,-4	.376,-5	.124,-3	.796,-4	-.129,-3	-.792,-4	-.357,-4
54	-.296,-4	-.558,-4	.185,-4	-.125,-4	-.731,-4	.450,-4	-.693,-5	-.161,-3	-.162,-3	.590,-4
55	-.101,-3	-.461,-4	.349,-4	-.978,-4	-.989,-4	.173,-4	-.297,-4	-.173,-3	-.131,-3	.117,-3
56	-.688,-4	-.220,-4	.919,-4	-.238,-3	.275,-4	.116,-4	.770,-4	-.103,-3	-.416,-4	.184,-3
57	-.674,-4	-.883,-4	.881,-4	-.206,-3	.597,-4	.409,-5	.139,-3	.433,-4	-.156,-4	.140,-3
58	-.781,-4	-.126,-3	.343,-4	-.308,-4	.247,-4	.489,-4	.242,-4	.828,-4	-.155,-3	.917,-4
59	-.843,-4	-.591,-4	.989,-4	.284,-4	-.481,-5	.103,-3	-.134,-4	.742,-4	-.156,-3	.839,-4
60	-.891,-4	-.375,-4	.149,-3	-.344,-4	-.221,-4	.660,-4	.149,-4	.958,-4	-.104,-3	.798,-4

Run No. 59 ; v component

	Separation Distance (m.)									
N	1	4	5	16	20	21	64	80	84	85
00	.269,-2	.305,-2	.262,-2	.300,-2	.185,-2	.182,-2	.486,-2	.491,-2	.470,-2	.302,-2
01	.179,-2	.239,-2	.184,-2	.183,-2	.126,-2	.126,-2	.341,-2	.134,-2	.299,-2	.216,-2
02	.677,-3	.179,-2	.263,-3	.807,-3	.740,-3	.170,-3	.365,-3	-.151,-2	.439,-4	.600,-3
03	.470,-3	.124,-2	-.141,-3	.102,-2	.804,-3	-.175,-4	-.211,-3	-.549,-3	-.488,-3	-.370,-3
04	.224,-3	.461,-3	-.499,-4	.105,-2	.338,-3	.183,-3	.339,-3	.860,-3	.320,-3	.225,-3
05	-.971,-5	.207,-3	.445,-3	.906,-3	-.200,-3	.314,-3	.751,-3	.143,-3	.411,-3	-.100,-3
06	.954,-4	.172,-3	.562,-3	.274,-3	-.101,-3	-.235,-3	.746,-3	-.164,-2	-.188,-3	.852,-4
07	.234,-3	-.757,-3	.124,-3	-.404,-3	.363,-3	-.396,-3	.585,-3	-.172,-2	-.159,-4	.168,-3
08	.146,-3	-.508,-3	-.467,-3	-.479,-3	.211,-3	-.130,-3	.160,-3	-.864,-3	.423,-3	-.198,-3
09	.646,-3	-.276,-3	-.578,-3	.340,-4	-.202,-3	-.397,-3	-.381,-3	-.123,-2	.554,-3	-.208,-3
10	.496,-3	-.256,-3	-.447,-3	.232,-3	-.138,-3	-.264,-3	-.408,-3	-.158,-2	.654,-3	.627,-3
11	.420,-4	.474,-4	-.641,-3	-.213,-3	-.171,-3	.254,-3	-.117,-3	-.249,-3	.849,-3	.731,-3
12	.843,-3	-.902,-4	-.278,-3	-.568,-3	-.594,-4	.419,-3	-.248,-3	.156,-3	.232,-3	.131,-3
13	.158,-2	-.281,-4	.305,-3	-.492,-3	.215,-3	.249,-3	-.123,-3	.151,-4	-.716,-3	-.423,-3
14	.982,-3	.928,-3	.896,-3	-.418,-3	-.145,-3	-.365,-3	.329,-4	.205,-3	-.492,-3	-.272,-3
15	.466,-3	.108,-2	.621,-3	-.173,-3	-.246,-3	-.378,-3	.998,-4	.380,-3	-.150,-3	-.187,-3
16	.586,-3	.589,-3	.229,-3	-.137,-3	-.198,-4	-.127,-3	.408,-3	.192,-3	-.620,-4	-.726,-3
17	.405,-3	.523,-3	.204,-3	-.114,-3	.119,-3	.436,-4	.463,-3	.238,-3	-.111,-3	-.255,-3
18	.252,-3	.600,-4	.631,-3	-.840,-5	.260,-3	.303,-4	.403,-3	.174,-3	-.210,-3	.431,-3
19	.220,-3	.682,-4	.635,-3	-.783,-5	.127,-3	-.335,-4	.509,-3	-.178,-3	-.183,-5	-.394,-4
20	.277,-3	-.882,-4	.198,-3	-.538,-5	-.178,-3	-.110,-3	.183,-3	-.641,-3	-.506,-4	-.400,-4
21	.330,-3	-.175,-3	-.189,-3	-.460,-4	-.825,-4	-.125,-4	.225,-3	-.691,-3	.445,-4	.254,-3
22	.433,-3	-.186,-3	-.310,-3	-.211,-3	.126,-3	.109,-3	-.304,-3	.141,-3	-.964,-4	.626,-4
23	.520,-3	-.138,-3	-.253,-4	-.258,-3	-.175,-3	-.130,-3	-.611,-3	.569,-3	-.275,-3	-.117,-3
24	.880,-3	-.165,-3	-.596,-4	.173,-3	-.288,-3	-.142,-3	-.469,-3	.244,-3	-.154,-3	.695,-4
25	.770,-3	-.130,-3	-.579,-4	.161,-3	-.791,-4	-.233,-3	-.413,-3	.624,-4	.244,-3	.359,-3
26	.492,-3	-.106,-3	.478,-5	-.576,-4	.878,-4	-.170,-3	-.302,-3	.100,-3	-.856,-4	-.414,-3
27	.361,-3	-.437,-4	-.125,-3	.124,-4	.158,-3	-.114,-3	-.424,-4	.259,-3	-.390,-3	-.650,-3
28	.400,-3	.111,-3	-.198,-4	.201,-3	.975,-4	-.852,-4	-.106,-3	.130,-3	-.168,-4	.341,-3
29	.675,-3	-.558,-4	-.710,-5	.238,-3	-.153,-3	-.182,-3	.354,-4	.320,-3	.322,-3	.984,-3
30	.645,-3	-.433,-3	-.292,-3	.136,-3	-.305,-3	-.130,-3	.318,-3	.249,-3	.639,-4	.597,-3
31	.563,-3	-.743,-3	-.244,-3	.130,-3	-.243,-3	-.998,-4	.132,-3	.267,-3	-.211,-3	.205,-3
32	.381,-3	-.438,-3	-.611,-4	.104,-3	.495,-4	-.469,-5	-.207,-4	.361,-3	-.321,-3	.124,-3
33	.239,-3	.254,-4	-.586,-4	.805,-4	.639,-4	.226,-3	.102,-3	.714,-4	-.138,-3	-.264,-3
34	.211,-3	.481,-4	-.160,-3	.267,-4	-.771,-4	.258,-3	.328,-4	-.247,-4	-.116,-3	-.518,-3
35	.119,-3	.704,-4	-.907,-4	-.154,-3	.586,-4	.669,-4	.411,-4	.275,-4	.658,-4	-.127,-3
36	.179,-3	.185,-3	.868,-4	-.271,-3	-.159,-4	-.177,-3	.184,-3	.702,-4	.201,-3	.109,-3
37	.306,-3	.142,-3	.686,-4	-.984,-4	-.601,-4	-.299,-3	.233,-3	.189,-3	.760,-5	.105,-3
38	.328,-3	.782,-4	-.416,-4	-.114,-3	.877,-4	.111,-3	.126,-3	-.148,-5	-.188,-3	.126,-3
39	.219,-3	.863,-4	.623,-5	-.238,-4	.173,-3	.332,-3	-.960,-4	-.998,-4	-.396,-4	.198,-4
40	-.426,-4	.673,-4	-.973,-4	.183,-3	.112,-3	.139,-3	-.596,-4	.187,-3	.123,-3	-.208,-3
41	-.601,-4	.108,-3	-.354,-3	.127,-3	.126,-3	.464,-4	.797,-4	.379,-3	.224,-3	-.343,-3
42	.169,-3	.571,-7	-.315,-3	-.106,-3	.180,-3	.903,-5	-.359,-4	.305,-3	.254,-3	-.227,-3
43	.319,-3	.341,-4	-.169,-3	-.922,-4	.113,-3	-.213,-4	-.156,-3	.161,-3	.177,-3	.125,-3
44	.123,-3	.920,-4	-.187,-3	-.650,-4	-.267,-4	.434,-4	-.208,-3	.978,-4	.579,-4	.395,-3
45	.104,-3	.998,-4	-.230,-4	-.504,-4	-.105,-4	.648,-4	-.161,-3	.878,-4	.127,-4	.314,-3
46	.141,-3	-.553,-4	.428,-4	-.227,-4	.669,-4	.513,-4	-.254,-4	-.732,-4	.712,-4	.105,-3
47	.453,-4	-.868,-4	.800,-4	-.411,-4	.101,-3	-.610,-4	.396,-4	-.108,-3	-.388,-4	-.493,-4
48	.147,-3	-.717,-4	.268,-3	.113,-3	.845,-4	.114,-4	.271,-4	-.671,-4	-.143,-3	-.369,-4
49	.174,-3	-.109,-3	.165,-3	.828,-4	-.173,-4	.857,-4	.536,-4	.910,-4	-.170,-3	-.502,-4
50	.994,-4	-.219,-4	.719,-4	-.109,-3	-.950,-4	-.355,-4	.821,-4	.154,-3	-.988,-4	-.110,-3
51	.690,-4	.189,-3	.169,-3	-.193,-3	-.199,-3	.596,-4	.560,-4	.637,-4	-.668,-4	-.211,-4
52	-.555,-4	.123,-3	.386,-4	-.190,-3	-.224,-3	.253,-3	.404,-4	.325,-4	.242,-4	.567,-5
53	-.482,-4	-.940,-4	-.102,-3	-.117,-3	.242,-4	.350,-3	.539,-4	-.981,-4	.144,-3	-.137,-5
54	-.900,-4	-.197,-4	-.110,-3	.934,-5	.659,-4	.115,-3	.183,-3	-.150,-3	.384,-4	.983,-4
55	-.154,-3	.120,-3	-.705,-4	.145,-3	-.289,-4	-.639,-4	.343,-3	-.124,-3	.699,-5	-.112,-4
56	-.288,-4	.153,-3	-.104,-3	.151,-3	-.102,-4	-.601,-4	.233,-3	-.129,-3	-.161,-4	-.144,-3
57	-.599,-5	.282,-4	-.138,-3	-.156,-3	-.484,-4	-.313,-4	-.107,-3	.450,-5	-.241,-3	-.531,-4
58	.940,-4	-.132,-3	.249,-4	.698,-4	-.185,-4	-.111,-3	-.156,-3	-.560,-4	-.335,-3	-.962,-4
59	.710,-4	-.293,-3	.120,-3	.249,-3	-.649,-4	-.161,-3	.605,-5	-.305,-4	-.192,-3	-.793,-4
60	-.370,-5	-.283,-3	.989,-4	.177,-3	-.782,-4	-.162,-3	.423,-4	-.234,-4	-.639,-4	-.497,-4

Run No. 60 ; u component

Separation Distance (m.)

N	1	4	5	16	20	21	64	80	84	85
00	.616,-1	.215,-1	.218,-1	.397,-1	.521,-1	.499,-1	.292,-1	.397,-1	.289,-1	.266,-1
01	.562,-1	.104,-1	.114,-1	.235,-1	.408,-1	.399,-1	.150,-1	.298,-1	.102,-1	.860,-2
02	.389,-1	.785,-3	.245,-2	.852,-2	.238,-1	.206,-1	.889,-2	.101,-1	.793,-2	.380,-2
03	.362,-1	-.268,-2	.870,-3	-.475,-2	.172,-1	.107,-1	-.257,-2	.907,-3	.114,-1	.727,-2
04	.312,-1	-.321,-2	-.129,-2	-.695,-2	.146,-1	.727,-2	-.145,-1	.241,-2	.248,-2	.664,-2
05	.205,-1	.368,-3	-.722,-3	-.282,-2	.124,-1	.475,-2	-.102,-1	-.643,-3	-.335,-2	.353,-2
06	.134,-1	.109,-2	.709,-3	-.417,-3	.410,-2	.790,-4	-.219,-2	-.307,-2	.647,-3	.408,-2
07	.904,-2	.454,-3	.822,-3	.151,-3	.724,-3	-.101,-2	-.105,-2	.376,-2	.320,-2	.610,-2
08	.123,-1	-.499,-3	-.177,-2	.172,-2	.456,-2	.321,-2	.503,-3	.644,-2	.788,-3	.373,-2
09	.110,-1	-.111,-2	-.240,-2	.229,-2	.535,-2	.222,-2	.245,-3	.774,-2	-.161,-2	.321,-3
10	.726,-2	-.325,-2	-.113,-2	.320,-3	.202,-2	-.186,-2	.498,-3	.683,-2	-.537,-3	.473,-3
11	.714,-2	-.140,-2	.302,-3	-.118,-2	.230,-2	-.164,-2	.875,-4	.612,-2	.177,-2	.201,-2
12	.649,-2	-.339,-3	.363,-3	- 271,-2	.255,-2	-.139,-2	.112,-2	.361,-2	.178,-2	.162,-2
13	.541,-2	-.163,-2	.201,-3	-.183,-2	.132,-3	-.194,-2	.922,-4	.194,-2	.430,-3	-.150,-3
14	.557,-2	-.951,-5	-.374,-3	.662,-3	-.909,-3	-.266,-2	.375,-3	.295,-2	.913,-3	-.192,-4
15	.469,-2	.276,-3	-.260,-2	.972,-3	.289,-3	-.221,-2	-.134,-3	.227,-2	.829,-3	-.113,-2
16	.359,-2	.264,-3	-.345,-3	.656,-3	-.399,-3	-.862,-3	-.380,-2	-.171,-3	.181,-2	-.193,-2
17	.423,-2	.247,-3	.147,-2	.180,-2	-.153,-2	-.167,-2	-.531,-2	.240,-2	.138,-2	-.129,-2
18	.470,-2	.236,-3	.941,-3	.101,-2	-.962,-3	-.199,-2	-.286,-2	.613,-3	-.702,-3	-.196,-3
19	.347,-2	.595,-3	.775,-3	.189,-3	-.297,-3	-.434,-3	.128,-3	.223,-2	-.134,-2	-.287,-3
20	.340,-2	.155,-2	.447,-3	-.851,-3	-.739,-3	.289,-5	.484,-3	-.214,-3	-.131,-2	.573,-3
21	.259,-2	.869,-3	-.162,-2	-.150,-3	-.622,-3	-.334,-4	-.941,-3	-.118,-2	-.857,-3	.887,-3
22	.254,-2	.184,-6	-.168,-2	-.121,-2	-.846,-3	.184,-3	-.267,-2	-.209,-3	.113,-3	-.554,-4
23	.332,-2	-.146,-3	.347,-3	-.855,-3	-.101,-2	-.216,-3	-.231,-2	-.714,-3	.131,-3	-.822,-3
24	.396,-2	-.702,-3	-.567,-3	-.403,-3	-.178,-2	-.101,-2	.629,-3	-.730,-3	-.206,-3	-.158,-3
25	.276,-2	.145,-3	-.622,-3	.210,-3	-.123,-2	-.115,-2	-.538,-3	.366,-3	-.668,-3	-.359,-3
26	.315,-2	.382,-3	.132,-3	.259,-4	-.298,-3	-.471,-3	-.542,-3	.815,-3	.364,-3	.414,-3
27	.387,-2	-.920,-4	.616,-3	.479,-3	-.422,-3	-.173,-3	.261,-3	.186,-3	.141,-2	.128,-2
28	.276,-2	.276,-3	.823,-3	.201,-3	-.432,-3	-.442,-3	.608,-3	-.509,-3	.792,-3	.592,-3
29	.260,-2	.946,-3	.106,-2	-.113,-2	-.122,-2	-.123,-2	.206,-3	-.503,-3	.756,-3	.406,-3
30	.170,-2	.100,-2	.904,-3	-.121,-2	-.134,-2	-.128,-2	-.587,-3	.687,-4	.495,-3	.594,-3
31	.757,-3	.395,-3	.426,-4	-.747,-3	-.858,-3	-.106,-2	-.798,-3	.677,-3	-.968,-4	.658,-3
32	.865,-3	.357,-3	-.546,-3	-.279,-3	-.649,-3	-.116,-2	-.822,-3	.440,-3	-.174,-3	.346,-3
33	.140,-2	.100,-2	.329,-3	.263,-3	.692,-4	-.563,-3	-.413,-3	-.709,-4	.126,-3	-.210,-3
34	.142,-2	.099,-3	.390,-3	.331,-4	.322,-3	-.137,-4	-.475,-3	-.127,-3	-.164,-3	.220,-4
35	.130,-2	.550,-3	-.233,-3	-.310,-3	.482,-3	.257,-3	-.421,-3	.307,-3	-.710,-3	-.514,-4
36	.121,-2	-.644,-4	-.366,-3	-.334,-3	.326,-3	.473,-3	.502,-3	-.441,-4	-.363,-3	-.162,-3
37	.781,-3	-.479,-3	-.353,-4	-.187,-3	-.156,-3	.552,-3	.550,-3	-.574,-3	-.526,-3	-.121,-3
38	.504,-3	-.370,-3	-.952,-4	-.268,-3	.218,-3	.233,-3	.278,-3	-.845,-3	-.243,-3	.871,-4
39	.576,-3	.543,-4	-.482,-3	-.576,-4	.706,-3	-.196,-3	.447,-3	-.772,-3	.161,-4	.391,-3
40	.684,-3	-.508,-4	-.297,-3	-.853,-3	.826,-3	.186,-3	.529,-3	-.473,-3	.401,-3	.821,-3
41	.404,-3	-.469,-3	-.516,-3	-.658,-3	.165,-3	.321,-3	.243,-3	-.117,-3	.563,-3	.116,-3
42	.178,-3	-.700,-3	-.621,-3	.358,-3	-.690,-3	.216,-3	.858,-4	.224,-3	.280,-3	.216,-3
43	.140,-3	-.471,-3	-.839,-3	.791,-3	-.895,-3	.960,-4	-.209,-3	.513,-3	.564,-4	-.555,-3
44	.060,-3	.267,-3	-.327,-3	.588,-3	-.534,-3	-.389,-3	-.249,-3	.287,-3	-.222,-5	-.735,-3
45	.828,-3	.461,-3	-.659,-4	.208,-3	-.157,-3	-.494,-3	-.147,-3	.331,-3	.192,-3	-.582,-3
46	.515,-3	.135,-3	-.176,-3	.198,-3	-.149,-3	-.389,-3	-.485,-3	.168,-3	.632,-5	-.280,-3
47	.434,-3	.248,-4	.208,-3	-.555,-4	-.255,-3	-.140,-3	-.284,-3	-.224,-4	-.699,-4	.295,-3
48	.716,-3	.159,-3	.338,-3	-.355,-3	.230,-3	.118,-3	.302,-3	.137,-3	.409,-3	.703,-3
49	.620,-3	.214,-3	.134,-3	.519,-4	.846,-4	.135,-3	.645,-3	.317,-3	.531,-3	.447,-3
50	.543,-2	.940,-4	-.416,-3	.536,-3	-.306,-3	-.386,-3	.251,-3	.258,-3	.732,-3	.545,-3
51	.459,-3	.761,-4	-.202,-3	.447,-3	-.470,-3	-.454,-3	-.453,-4	-.560,-5	.821,-3	.825,-3
52	.400,-3	.279,-3	-.119,-4	-.322,-3	-.436,-3	-.546,-4	.223,-3	-.506,-4	.185,-3	.441,-3
53	.744,-3	.503,-3	-.605,-4	-.413,-3	-.244,-3	-.178,-3	.174,-3	-.415,-3	-.823,-5	.647,-3
54	.815,-3	.268,-3	-.655,-4	.323,-3	-.667,-4	-.179,-3	.573,-4	-.530,-3	.395,-3	.854,-3
55	.564,-3	-.624,-4	-.272,-3	.616,-3	-.740,-5	-.260,-4	-.122,-3	-.144,-3	.333,-3	.723,-4
56	.532,-3	-.819,-4	-.378,-3	.383,-3	.105,-3	-.230,-3	-.417,-3	-.241,-3	.735,-4	-.468,-3
57	.149,-3	-.957,-4	.178,-3	-.724,-4	.743,-4	-.272,-3	-.180,-3	-.596,-3	.132,-3	-.298,-3
58	.845,-4	.216,-3	.536,-3	.482,-4	-.646,-4	-.208,-3	.159,-3	.385,-4	-.841,-4	-.924,-4
59	.351,-3	.291,-3	.320,-3	.674,-3	-.262,-3	-.175,-4	.173,-3	.512,-3	-.156,-4	-.964,-4
60	.294,-3	.209,-3	.170,-4	.603,-3	-.315,-3	.912,-4	-.608,-4	.572,-3	-.982,-5	-.115,-3

Run No. 60 ; v component

Separation Distance (m.)

N	1	4	5	16	20	21	64	80	84	85
00	.674,-2	.619,-2	.823,-2	.101,-1	.321,-2	.405,-2	.115,-2	.918,-3	.498,-2	.832,-2
01	.620,-2	.573,-2	.673,-2	.714,-2	.332,-2	.231,-2	-.140,-2	.563,-2	.267,-2	.204,-2
02	.541,-2	.481,-2	.520,-2	.910,-3	.343,-3	-.157,-2	-.224,-2	-.403,-3	-.550,-3	-.100,-2
03	.367,-2	.310,-2	.373,-2	-.599,-3	-.125,-2	-.202,-2	.232,-2	-.334,-3	-.310,-2	-.215,-2
04	.157,-2	.129,-2	.234,-2	-.367,-4	.202,-3	-.128,-2	.325,-2	-.429,-3	-.180,-2	-.112,-2
05	.109,-2	.423,-3	.194,-2	-.932,-3	.136,-2	-.150,-2	.273,-2	-.119,-2	-.106,-3	-.450,-3
06	.651,-3	.620,-4	.124,-2	-.310,-2	.185,-2	-.385,-3	.300,-2	-.209,-2	.579,-3	-.514,-3
07	.172,-2	.497,-3	.129,-2	-.246,-2	.717,-3	-.309,-3	.218,-2	-.840,-3	.211,-2	-.603,-4
08	.218,-2	.156,-3	.967,-3	-.217,-2	-.190,-3	-.179,-3	.127,-2	.285,-3	.978,-3	-.223,-3
09	.193,-2	-.646,-4	.217,-3	-.175,-2	-.599,-3	.242,-3	.619,-3	-.141.-2	-.472,-3	-.738,-3
10	.139,-2	.107,-3	.569,-5	-.946,-4	-.836,-3	.878,-4	.171,-3	-.171,-2	-.103,-2	-.101,-2
11	.197,-2	-.321,-3	-.431,-3	.352,-3	-.141,-2	-.124,-2	-.104,-2	-.528,-3	-.446,-3	.330,-4
12	.214,-2	-.432,-3	-.780,-3	-.283,-4	-.123,-2	-.178,-2	-.178,-2	.510,-3	-.188,-4	.623,-3
13	.119,-2	-.112,-3	-.683,-3	.848,-3	-.230,-3	-.278,-3	-.921,-3	.147,-2	-.660,-3	.934,-4
14	.122,-2	-.437,-3	-.292,-3	.189,-2	-.357,-3	-.815,-4	-.973,-3	.333,-3	-.860,-3	-.170,-3
15	.537,-3	-.536,-3	.360,-3	.103,-2	-.754,-3	-.423,-3	-.692,-3	-.101,-2	.102,-2	-.329,-3
16	.669,-3	-.797,-3	-.582,-4	-.333,-3	.814,-3	.512,-3	.181,-3	-.986,-3	.191,-2	-.874,-3
17	.130,-2	-.312,-3	-.596,-3	-.368,-3	.182,-2	.437,-3	.692,-3	.196,-3	.857,-3	-.809,-3
18	.110,-2	-.218,-3	-.512,-3	-.141,-3	.764,-3	.102,-4	.913,-4	.141,-2	.660,-3	.582,-3
19	.512,-3	-.113,-3	.246,-3	-.635,-4	.177,-3	.628,-3	-.110,-2	.167,-2	.251,-3	.956,-3
20	.437,-3	.876,-3	.787,-3	-.208,-3	.831,-3	.715,-3	-.133,-2	.120,-2	-.986,-4	.258,-3
21	.688,-3	.530,-3	.804,-3	-.290,-3	.208,-2	.275,-3	-.149,-2	.611,-3	.146,-3	-.599,-3
22	.138,-3	-.420,-3	.795,-3	-.502,-3	.122,-2	-.358,-3	.396,-4	-.765,-3	.845,-3	-.542,-3
23	-.471,-3	-.409,-3	.372,-3	-.172,-3	.152,-3	.344,-5	.149,-2	-.956,-3	-.394,-3	-.393,-3
24	-.583,-3	.182,-3	-.521,-3	-.732,-3	-.861,-3	.381,-3	.123,-2	.437,-3	-.149,-2	-.764,-3
25	.192,-3	-.255,-3	-.215,-3	-.508,-3	-.611,-3	.710,-3	.444,-3	.885,-3	-.323,-3	-.673,-3
26	.596,-3	-.186,-3	.229,-3	.645,-3	.103,-3	.524,-4	.108,-2	-.134,-3	-.590,-3	.374,-4
27	.970,-3	.232,-3	.148,-3	.125,-2	-.383,-3	-.974,-3	.143,-2	-.239,-3	-.117,-2	-.771,-3
28	.100,-2	-.712,-4	-.325,-3	.930,-3	-.210,-3	-.469,-4	.114,-2	.303,-3	-.800,-3	-.312,-3
29	.312,-3	-.987,-4	.259,-3	-.764,-4	.225,-3	.824,-3	.212,-3	-.602,-3	-.102,-3	.654,-3
30	.220,-4	.156,-3	.341,-3	-.325,-3	.536,-4	.899,-3	-.472,-3	-.702,-4	.622,-3	.884,-3
31	.203,-3	.364,-3	.425,-3	-.999,-4	.112,-3	.806,-3	-.696,-3	.751,-3	.258,-3	.610,-3
32	.557,-3	-.338,-4	.183,-3	.292,-4	-.574,-3	.136,-3	-.381,-3	.475,-3	-.239,-3	.388,-3
33	.379,-3	-.332,-3	.180,-4	-.602,-3	-.251,-3	-.169,-3	.521,-3	-.413,-4	.319,-3	.744,-3
34	-.481,-4	-.955,-4	.247,-3	-.252,-3	-.173,-3	-.304,-3	.630,-3	.370,-4	.428,-3	.587,-3
35	-.142,-3	.786,-5	-.154,-3	-.435,-3	-.707,-4	-.500,-3	.155,-3	-.146,-3	-.127,-3	.297,-3
36	-.801,-4	-.437,-4	-.132,-2	-.218,-3	.458,-4	.643,-4	-.926,-3	-.137,-2	-.139,-3	.134,-3
37	-.250,-3	.177,-3	-.115,-2	.906,-4	-.563,-4	.657,-5	-.826,-3	-.123,-2	.273,-3	-.905,-4
38	.103,-3	-.113,-3	-.457,-3	.155,-3	-.294,-3	-.732,-3	-.571,-3	-.806,-3	.461,-3	-.365,-3
39	.193,-3	-.720,-3	-.446,-3	.509,-4	-.476,-3	-.543,-3	.136,-3	-.899,-3	.409,-3	.227,-6
40	.266,-3	-.531,-3	-.347,-3	-.599,-3	-.463,-3	-.140,-3	.138,-2	-.887,-3	-.539,-6	-.452,-3
41	.319,-3	-.145,-3	-.528,-3	-.490,-3	.136,-3	- 218,-3	.724,-3	-.278,-3	-.358,-3	-.530,-3
42	.266,-4	-.548,-3	-.565,-3	-.115,-3	.317,-3	-.466,-3	.256,-4	.890,-3	-.172,-3	-.281,-3
43	-.875,-4	-.635,-3	.329,-3	.814,-4	-.362,-3	-.248,-3	-.372,-3	.400,-3	.308,-3	-.660,-3
44	.304,-3	.338,-3	.593,-3	.838,-3	-.124,-2	.234,-3	.165,-3	-.251,-3	.405,-3	-.802,-5
45	.545,-3	.690,-3	.234,-3	.426,-3	-.511,-3	.477,-3	.125,-2	.577,-3	.586,-3	.422,-3
46	.191,-3	.260,-3	-.213,-3	-.188,-3	.164,-3	.766,-3	.616,-3	.798,-3	.614,-3	-.214,-3
47	-.305,-3	.496,-5	-.774,-3	-.286,-3	-.103,-2	.921,-3	-.471,-4	.620,-3	-.181,-3	-.637,-3
48	-.162,-3	.119,-2	-.103,-2	-.932,-3	-.106,-2	.643,-3	.860,-3	-.387,-3	-.613,-3	-.314,-3
49	.810,-4	.797,-3	-.804,-3	-.975,-3	.451,-3	.658,-3	.664,-3	-.759,-3	-.255,-3	-.735,-3
50	-.100,-3	.776,-3	-.393,-3	-.122,-3	.823,-3	.810,-3	-.485,-3	-.662,-3	-.597,-3	-.836,-3
51	.249,-4	.553,-3	.515,-3	-.964,-4	.270,-3	.473,-3	-.250,-3	-.917,-3	-.861,-3	-.616,-3
52	-.242,-3	.263,-3	.909,-3	-.672,-3	-.342,-3	-.635,-3	.181,-3	-.601,-3	-.310,-3	-.149,-3
53	.125,-3	.232,-3	.572,-3	-.110,-3	-.116,-2	-.120,-2	.856,-3	-.145,-4	-.645,-3	.366,-3
54	.720,-3	.231,-3	.494,-3	.721,-3	-.836,-3	-.398,-3	.128,-2	.236,-3	-.900,-4	.982,-4
55	.539,-3	-.147,-5	.699,-3	.543,-5	-.218,-3	.443,-3	.788,-3	-.969,-4	.563,-3	.435,-4
56	.401,-3	-.586,-4	-.576,-3	-.121,-2	-.111,-3	.340,-3	.554,-3	-.382,-3	-.147,-3	-.906,-4
57	.320,-3	-.301,-3	-.803,-3	-.103,-2	-.675,-4	.252,-3	.225,-3	.607,-3	-.184,-3	.806,-4
58	.431,-4	-.970,-4	-.542,-3	.969,-4	-.654,-5	-.717,-4	-.538,-4	.106,-2	.792,-3	-.373,-4
59	-.935,-5	.386,-5	-.305,-3	.472,-3	-.183,-3	-.293,-4	-.237,-4	.223,-3	.127,-2	-.252,-4
60	.156,-4	-.257,-3	-.490,-4	.445,-3	-.373,-3	.997,-4	-.115,-3	-.302,-3	.827,-3	.197,-3

Run No. 62 ; u component

	Separation Distance (m_s)									
N	1	4	5	16	20	21	64	80	84	85
00	.240	.177	.197	.193	.225	.251	.102	.126	.966,-1	.984,-1
01	.194	.125	.137	.136	.179	.195	.674,-1	.830,-1	.668,-1	.633,-1
02	.136	.900,-1	.555,-1	.703,-1	.103	..02	.313,-1	.419,-1	.294,-1	.236,-1
03	.632,-1	.300,-2	.582,-2	.202,-1	.614,-1	.538,-1	-.333,-2	.262,-1	-.317,-2	-.417,-2
04	.498,-1	-.352,-2	-.417,-2	-.674,-2	.448,-1	.361,-1	-.219,-1	.201,-1	-.133,-1	-.105, -1
05	.408,-1	-.133,-2	.135,-2	-.540,-2	.244,-1	.204,-1	-.133,-1	.138,-1	-.796,-2	-.437,-2
06	.276,-1	-.643,-3	.143,-2	-.224,-2	.936,-2	.939,-2	-.226,-2	.550,-2	-.562,-2	-.369,-2
07	.167,-1	.162,-3	.582,-3	.180,-2	.524,-2	.395,-2	-.251,-2	-.236,-2	-.617,-2	-.563,-2
08	.127,-1	.316,-2	.263,-2	.436,-2	.513,-2	.595,-2	-.787,-3	.267,-3	-.435,-2	-.374,-2
09	.134,-1	.440,-2	.369,-2	.345,-2	.903,-2	.748,-2	.161,-2	.306,-2	-.291,-2	-.307,-2
10	.145,-1	-.245,-3	-.703,-3	-.195,-2	.506,-2	.237,-2	.114,-2	.438,-3	-.337,-2	-.450,-2
11	.202,-1	-.261,-2	-.340,-2	-.253,-2	.177,-2	-.167,-2	-.733,-3	-.125,-2	-.743,-2	-.730,-2
12	.166,-1	-.244,-2	-.341,-2	-.193,-2	.211,-2	.269,-3	-.176,-2	-.110,-4	-.272,-2	-.469,-3
13	.237,-2	-.157,-3	-.172,-2	-.239,-2	.131,-2	.560,-3	-.116,-2	.102,-2	.230,-2	.337,-2
14	.365,-2	.733,-3	-.110,-3	-.354,-3	.911,-3	.121,-2	.244,-2	.805,-3	.278,-2	.393,-2
15	.936,-2	-.696,-3	.594,-4	.240,-3	.101,-2	.164,-2	.197,-2	.168,-2	.288,-3	-.732,-4
16	.658,-2	-.179,-2	-.113,-2	-.214,-2	.121,-2	.105,-2	.414,-3	.140,-2	-.126,-2	-.182,-2
17	.366,-2	-.738,-3	-.152,-2	-.170,-2	.117,-2	.858,-3	.369,-3	.102,-2	-.623,-3	-.561,-3
18	.298,-2	-.810,-3	-.309,-2	-.695,-3	.756,-3	-.450,-3	.119,-3	.105,-2	-.312,-3	-.473,-3
19	.352,-2	.421,-3	-.196,-2	-.503,-3	.967,-3	-.623,-3	.105,-2	.502,-3	.108,-3	.155,-3
20	.469,-2	.196,-2	.100,-2	.579,-3	.100,-2	.602,-3	.733,-3	-.192,-3	-.117,-3	.504,-3
21	.555,-2	.183,-2	.161,-2	.255,-3	.706,-3	.325,-3	-.345,-3	-.353,-3	.512,-4	.816,-3
22	.429,-2	.534,-3	.675,-3	-.421,-3	-.140,-3	-.231,-3	-.830,-3	-.226,-3	.342,-3	.106,-2
23	.421,-2	.737,-3	.183,-3	-.668,-3	-.127,-3	.681,-4	.205,-3	.176,-3	.853,-3	.155,-2
24	.324,-2	.956,-3	-.183,-3	-.200,-3	.675,-3	.430,-3	.714,-3	.139,-3	.490,-3	.133,-2
25	.228,-2	.239,-3	-.398,-3	.452,-4	.869,-3	-.184,-3	.685,-3	-.423,-3	-.542,-3	-.206,-3
26	.253,-2	-.536,-3	-.939,-3	.630,-3	-.222,-3	-.887,-3	.842,-4	-.853,-3	.184,-3	-.577,-3
27	.241,-2	-.142,-2	-.105,-2	.118,-2	-.106,-2	-.983,-3	-.239,-3	-.111,-2	.517,-3	.419, 4
28	.134,-2	-.126,-2	-.427,-3	.640,-3	-.397,-3	-.656,-3	.263,-3	-.859,-3	.158,-3	.341,-3
29	.199,-2	-.481,-3	.486,-3	-.490,-4	-.157,-3	-.134,-4	.533,-3	.105,-4	.197,-3	.139,-2
30	.241,-2	.140,-3	.732,-4	-.515,-3	.839,-3	.191,-3	-.111,-3	.371,-3	.106,-3	.169,-2
31	.240,-2	.244,-3	.120,-4	-.766,-3	.140,-2	.672,-3	-.551,-3	.783,-3	-.336,-4	.101,-2
32	.278,-2	.255,-3	.259,-3	-.535,-3	.523,-3	.276,-3	-.252,-3	.115,-2	.497,-3	.590,-3
33	.248,-2	.133,-3	.195,-4	-.555,-3	.322,-3	-.722,-4	-.194,-3	.346,-3	.161,-4	-.149,-3
34	.200,-2	.580,-3	.660,-3	-.100,-2	.192,-3	-.544,-3	-.414,-4	-.592,-3	-.621,-3	-.780,-3
35	.188,-2	.753,-3	.135,-3	-.137,-2	-.490,-3	-.977,-3	-.278,-4	-.287,-3	-.321,-3	-.392,-3
36	.175,-2	.219,-3	.615,-3	-.320,-3	-.547,-3	-.727,-3	-.502,-3	-.224,-3	.286,-3	.392,-3
37	.179,-2	.225,-3	-.204,-3	.179,-3	-.595,-3	-.579,-3	-.461,-3	.388,-5	.690,-3	.924,-3
38	.910,-3	.101,-3	.101,-3	.436,-4	-.622,-3	-.419,-3	-.287,-3	-.743,-4	.903,-4	.540,-3
39	.498,-3	-.115,-3	.308,-3	.232,-3	-.424,-3	-.460,-3	.181,-3	-.298,-3	-.616,-3	-.339,-4
40	.296,-3	.117,-3	.306,-3	-.301,-3	-.349,-3	-.603,-3	.104,-3	-.129,-3	-.708,-3	-.431,-3
41	.169,-2	.546,-3	.572,-3	-.850,-4	-.736,-4	-.546,-3	-.241,-3	-.635,-3	-.570,-3	-.545,-3
42	.174,-2	.351,-3	.507,-3	.124,-3	.456,-4	-.164,-3	-.709,-4	-.556,-3	-.328,-3	-.225,-3
43	.822,-3	.731,-3	.773,-4	.113,-3	.100,-3	.168,-3	.449,-3	.106,-3	.569,-4	.965,-3
44	.206,-3	-.255,-4	-.167,-3	-.267,-4	.393,-3	.305,-3	.153,-3	-.709,-4	-.199,-3	.736,-3
45	.370,-3	.134,-3	.717,-4	-.327,-3	.784,-3	.654,-4	-.250,-3	-.177,-3	-.449,-3	-.654,-4
46	.150,-3	.208,-3	-.210,-4	-.133,-3	.205,-3	-.603,-3	.233,-4	.149,-3	.724,-4	-.128,-3
47	.631,-3	.599,-4	.165,-4	-.100,-3	-.293,-3	-.611,-3	.123,-3	.423,-3	.139,-3	-.809,-4
48	.718,-3	-.216,-3	-.651,-4	-.971,-4	-.100,-3	-.115,-3	-.845,-4	.517,-4	.525,-4	-.401,-3
49	.569,-3	-.308,-3	.139,-3	-.113,-3	.533,-4	-.160,-3	-.122,-3	-.174,-3	.214,-3	-.298,-3
50	.750,-3	-.200,-3	.810,-4	-.143,-3	-.237,-3	-.229,-3	-.298,-3	-.816,-4	.379,-3	.127,-3
51	.876,-3	-.868,-5	.925,-5	-.217,-3	-.192,-3	-.963,-4	-.183,-3	-.157,-3	-.114,-3	.116,-3
52	.761,-3	-.130,-4	.125,-3	-.278,-3	-.368,-3	-.130,-3	.918,-4	-.177,-3	-.319,-3	-.276,-4
53	.854,-3	.277,-3	.190,-3	-.636,-3	-.730,-3	-.328,-3	.131,-3	.752,-4	.618,-4	-.105,-3
54	.719,-3	.612,-3	.170,-3	-.370,-3	-.403,-3	-.130,-3	.160,-3	.218,-3	.822,-4	.159,-3
55	.534,-3	.335,-3	-.137,-3	-.218,-3	.423,-4	-.810,-4	-.259,-4	.508,-3	-.400,-4	.196,-3
56	.616,-3	.319,-3	-.673,-4	-.334,-3	-.205,-3	-.348,-3	-.107,-3	.588,-3	.228,-3	.185,-3
57	.740,-3	.184,-3	.178,-4	-.751,-4	-.245,-3	-.568,-3	.339,-4	.150,-3	.401,-3	.207,-3
58	.553,-3	-.125,-3	-.415,-3	-.562,-4	.156,-3	-.234,-3	.919,-4	-.277,-4	.294,-3	.992,-4
59	.158,-3	-.425,-3	.250,-4	-.406,-3	.350,-3	.201,-4	.432,-4	.109,-3	.105,-3	-.482,-4
60	-.105,-3	-.668,-3	.373,-3	-.436,-3	.217,-3	-.236,-4	-.260,-6	.167,-3	.221,-4	-.783,-4

Run No. 62 ; v component

Separation Distance (m.)

N	1	4	5	16	20	21	64	80	84	85
00	.130	.113	.120	.602,-1	.570,-1	.610,-1	.130,-1	-.271,-2	-.461,-2	-.112,-1
01	.108	.953,-1	.988,-1	.510,-1	.452,-1	.472,-1	.111,-1	-.237,-3	-.290,-2	-.900,-2
02	.554,-1	.470,-1	.503,-1	.244,-1	.173,-1	.176,-1	-.742,-3	-.509,-2	-.798,-2	-.115,-1
03	.275,-1	.235,-1	.256,-1	.127,-1	.777,-2	.603,-2	-.696,-2	-.652,-2	-.393,-2	-.571,-2
04	.145,-1	.149,-1	.122,-1	.114,-1	.612,-2	.392,-2	-.328,-3	.169,-2	.377,-2	.475,-2
05	.118,-1	.101,-1	.956,-2	.993,-2	.958,-3	.163,-2	.200,-2	.229,-2	.417,-3	.253,-2
06	.131,-1	.105,-1	.981,-2	.681,-3	-.172,-2	-.570,-3	.764,-3	-.210,-2	-.222,-2	-.923,-3
07	.115,-1	.102,-1	.979,-2	-.495,-3	-.148,-2	-.163,-2	-.107,-2	-.307,-2	-.186,-2	-.974,-3
08	.877,-2	.882,-2	.840,-2	.225,-3	-.123,-3	.374,-3	-.226,-2	-.175,-2	-.551,-3	-.115,-2
09	.783,-2	.685,-2	.580,-2	-.231,-2	-.297,-2	-.207,-2	-.251,-2	-.169,-4	.961,-3	.313,-3
10	.730,-2	.464,-2	.368,-2	-.226,-2	-.477,-2	-.425,-2	-.193,-2	.642,-3	-.288,-3	.812,-3
11	.480,-2	.128,-2	.160,-2	.111,-2	-.259,-2	-.264,-2	-.632,-3	.637,-4	-.115,-2	.264,-3
12	.591,-2	.408,-2	.391,-2	.103,-2	-.134,-2	-.174,-2	-.919,-3	-.140,-2	-.388,-4	.522,-4
13	.580,-2	.426,-2	.406,-2	-.332,-3	-.103,-2	-.130,-2	-.179, 2	-.296,-3	.153,-2	.108,-2
14	.346,-2	.570,-3	.914,-3	.928,-3	-.108,-2	-.796,-3	-.196,-2	-.259,-3	.252,-2	.146,-2
15	.216,-2	-.204,-3	-.230,-3	.204,-2	-.126,-2	-.406,-3	-.544,-3	-.134,-2	.132,-2	.491,-3
16	.202,-2	.152,-2	.198,-3	.145,-2	-.111,-2	-.201,-3	-.684,-3	-.144,-2	-.735,-3	-.700,-3
17	.217,-2	.190,-2	.601,-3	.320,-4	-.220,-3	.456,-3	-.913,-3	-.102,-2	-.172,-2	-.593,-3
18	.273,-2	.453,-3	.570,-3	-.719,-3	-.494,-3	.273,-3	-.772,-3	-.293,-4	-.114,-2	-.102,-2
19	.403,-2	.933,-3	.179,-2	-.158,-3	-.127,-2	-.586,-3	-.234,-3	.124,-3	-.295,-3	-.103,-2
20	.233,-2	.513,-3	.234,-2	-.267,-3	-.170,-2	-.138,-2	.128,-2	-.642,-3	-.386,-3	-.321,-3
21	.306,-2	.101,-2	.133,-2	-.795,-3	-.123,-2	-.124,-2	.120,-2	-.757,-3	-.937,-3	-.974,-3
22	.289,-2	.164,-2	.514,-3	-.436,-4	-.639,-3	-.953,-4	.696,-3	-.201,-3	-.357,-3	.174,-3
23	.173,-2	.129,-2	.273,-3	.121,-3	-.245,-3	.362,-3	.647,-3	-.828,-3	.746,-3	.135,-2
24	.128,-2	.109,-2	-.248,-3	.254,-3	.192,-3	-.363,-3	.617,-3	-.970,-3	-.533,-3	.602,-3
25	.151,-2	.130,-2	-.529,-4	.516,-3	.285,-3	-.190,-3	.472,-3	.648,-4	-.123,-2	.395,-3
26	.156,-2	.263,-2	.388,-3	.147,-2	.304,-3	.596,-3	-.730,-4	.827,-3	-.841,-3	-.313,-3
27	.883,-3	.178,-2	-.311,-4	.133,-2	-.493,-4	.313,-3	.583,-3	.643,-3	-.243,-3	-.540,-3
28	.502,-3	.266,-3	-.435,-3	.322,-3	.187,-3	.651,-4	.661,-3	.157,-3	-.637,-3	-.389,-4
29	.809,-3	-.370,-3	-.422,-3	-.121,-2	.143,-2	.331,-3	.204,-3	.513,-3	-.108,-2	-.227,-3
30	.721,-3	-.216,-3	-.197,-3	-.186,-2	.183,-2	.590,-3	.822,-3	.270,-3	-.151,-3	.151,-3
31	.592,-3	.518,-3	.671,-4	-.780,-3	.693,-3	.696,-3	.997,-3	-.606,-4	.455,-3	.583,-3
32	.531,-3	.113,-2	-.215,-3	-.307,-3	.569,-3	.266,-3	.517,-3	-.263,-3	.548,-3	.460,-3
33	.119,-2	.171,-2	-.925,-3	-.854,-3	.984,-3	.585,-3	.294,-3	-.278,-3	.614,-3	.409,-3
34	.164,-2	-.283,-4	-.749,-3	-.466,-3	.877,-4	.258,-3	-.174,-3	-.650,-3	.162,-3	.173,-3
35	.168,-2	-.530,-3	-.262,-3	-.556,-4	-.326,-3	-.347,-3	-.983,-4	-.110,-2	.274,-3	.140,-3
36	.171,-2	-.169,-3	-.530,-4	-.416,-3	-.184,-3	-.811,-3	-.328,-4	-.318,-3	.638,-4	.698,-4
37	.102,-2	-.154,-5	.346,-3	-.467,-3	-.267,-3	-.812,-3	-.425,-3	.442,-3	-.758,-3	.854,-4
38	.818,-3	.748,-3	.605,-3	.206,-3	.335,-4	-.363,-3	-.812,-3	.323,-3	-.168,-3	.457,-4
39	.104,-2	.185,-2	.626,-3	.209,-3	-.178,-3	-.193,-3	-.413,-3	-.241,-3	-.154,-3	.170,-3
40	.782,-3	.130,-2	.661,-3	-.326,-3	-.264,-3	.256,-3	-.180,-3	.295,-3	-.245,-3	.109,-3
41	.397,-3	.435,-3	.692,-3	.656,-4	-.387,-3	.458,-3	.482,-4	.614,-3	.933,-4	.248,-3
42	.552,-3	.323,-3	.554,-3	-.552,-4	-.313,-3	.402,-4	.479,-3	.872,-4	-.138,-3	.495,-3
43	.908,-3	.123,-2	.293,-3	-.458,-3	-.173,-4	-.231,-3	.376,-3	-.311,-3	-.412,-3	.431,-3
44	.833,-3	.116,-2	-.112,-3	-.449,-3	-.979,-4	.354,-3	.224,-3	.560,-5	-.237,-3	.247,-3
45	.126,-2	-.141,-3	-.657,-3	-.266,-3	.144,-3	.961,-3	-.173,-3	.309,-3	.371,-3	.492,-3
46	.143,-2	-.282,-3	.944,-4	.290,-3	-.390,-4	.638,-3	-.252,-3	.265,-3	.613,-3	.795,-3
47	.129,-2	.102,-3	.644,-3	.206,-3	-.110,-3	.601,-3	.212,-3	.217,-3	.409,-3	.113,-3
48	.176,-2	.296,-3	.576,-3	-.490,-3	.536,-3	.526,-3	.141,-3	.155,-3	.432,-3	.106,-3
49	.170,-2	.798,-3	.253,-3	-.436,-3	.485,-3	.134,-3	.210,-3	.257,-3	.410,-3	.367,-3
50	.675,-3	.831,-3	.944,-4	-.473,-4	.742,-3	-.455,-3	-.292,-4	.266,-3	.406,-3	-.921,-5
51	.572,-4	.498,-3	.236,-4	-.444,-3	.198,-3	-.316,-3	-.777,-3	.154,-3	.578,-3	-.305,-3
52	-.961,-4	-.125,-3	-.323,-3	-.719,-3	-.327,-3	.482,-3	-.553,-3	-.174,-3	.609,-3	-.361,-3
53	.487,-3	-.667,-3	-.502,-3	-.318,-3	-.293,-3	.690,-3	-.141,-3	-.731,-4	.465,-3	-.159,-3
54	.780,-3	-.849,-3	-.781,-3	-.906,-3	.494,-4	.388,-3	-.281,-4	-.366,-3	.474,-3	.581,-4
55	.448,-3	-.537,-3	-.351,-3	.453,-3	.199,-3	.349,-3	-.773,-5	-.679,-3	.530,-3	.124,-3
56	.351,-3	-.779,-4	.888,-6	.455,-3	-.149,-3	.418,-3	-.414,-4	-.420,-3	.171,-3	-.150,-3
57	.412,-3	-.688,-4	.298,-3	-.134,-3	-.203,-3	-.549,-4	.684,-4	-.159,-3	-.291,	-.417,-3
58	.365,-3	-.596,-4	.196,-3	.698,-4	-.124,-3	-.674,-3	.385,-3	-.146,-3	-.242,	-.262,-3
59	-.218,-3	.374,-3	.255,-3	.140,-4	-.345,-4	-.589,-3	.364,-3	-.238,-3	-.231,-3	-.330,-4
60	-.356,-3	.116,-3	.260,-3	-.377,-3	.174,-3	-.287,-3	.215,-3	-.791,-4	-.688,-4	.746,-4

Run No. 65 ; u component

Separation Distance (m.)

N	6	12	18	24	36	42	48	72	84	90
00	.523,-1	.429,-1	.459,-1					.247,-1	.102,-1	.145,-1
01	.571,-1	.424,-1	.444,-1					.190,-1	.561,-2	.511,-2
02	.692,-1	.414,-1	.469,-1					.884,-2	.132,-2	-.437,-2
03	.677,-1	.345,-1	.395,-1					.450,-2	-.971.-3	-.961,-2
04	.439,-1	.199,-1	.169,-1					.652,-2	.132,-2	-.263,-3
05	.244,-1	.103,-1	.231,-2					.509,-2	.521,-2	.726,-2
06	.172,-1	.753,-2	-.217,-2					.487,-2	.579,-2	.144,-2
07	.110,-1	.570,-2	-.297,-2					.510,-2	.328,-2	-.148,-2
08	.897,-2	.451,-2	-.459,-2					.395,-2	.117,-2	-.152,-2
09	.624,-2	.157,-2	-.444,-2					.325,-2	-.102,-2	-.506,-3
10	.136,-2	-.993,-3	-.251,-2					.253,-2	-.225,-2	.151,-3
11	.153,-2	.337,-3	.783,-3					.326,-2	-.199,-2	-.234,-3
12	.215,-2	.891,-3	.593,-3					.256,-2	.545,-4	-.470,-3
13	.169,-2	.905,-3	.103,-2					.129,-2	.168,-2	-.632,-3
14	-.396,-4	-.846,-3	.847,-3					-.175,-2	.708,-3	.150,-3
15	-.433,-3	-.932,-3	-.235,-3					-.109,-2	.724,-3	-.548,-3
16	-.135,-2	-.166,-2	-.106,-2					.405,-3	.982,-3	-.223,-2
17	-.655,-3	-.268,-2	-.155,-2					.500,-3	.118,-2	-.207,-2
18	.142,-4	-.214,-2	-.956,-3					.939,-3	.148,-2	-.133,-2
19	-.563,-3	-.181,-2	-.905,-4					.593,-3	.394,-3	-.115,-2
20	-.116,-2	-.938,-3	.395,-3					.962,-3	-.134,-2	-.118,-2
21	-.662,-3	-.559,-3	.411,-3					.626,-3	-.101,-2	.154,-4
22	-.595,-3	-.407,-3	-.818,-3					.244,-3	-.514,-4	.879,-3
23	-.101,-2	-.144,-3	-.107,-2					.103,-3	-.429,-3	.356,-3
24	-.676,-3	-.195,-3	-.247,-3					.479,-4	-.204,-3	.759,-3
25	-.594,-3	.161,-3	-.126,-3					.495,-4	.312,-3	.382,-3
26	-.728,-3	-.139,-3	-.397,-3					.166,-3	-.146,-2	-.786,-4
27	-.125,-2	-.379,-3	-.525,-3					.417,-3	-.221,-2	.611,-4
28	-.129,-2	-.464,-3	-.733,-3					.392,-4	-.913,-3	-.892,-3
29	-.923,-3	-.510,-3	-.442,-3					.336,-4	-.192,-3	-.703,-3
30	-.138,-2	.187,-3	-.530,-3					.396,-3	-.160,-3	-.103,-2
31	-.115,-2	-.127,-4	-.339,-3					-.348,-3	.134,-3	-.781,-3
32	-.123,-2	-.585,-3	.141,-3					-.342,-3	.116,-3	-.325,-4
33	-.856,-3	-.574,-3	.257,-4					.366,-3	-.461,-3	.293,-3
34	-.521,-3	-.395,-3	.902,-4					.233,-3	-.704,-3	.223,-3
35	-.402,-3	-.134,-3	.390,-3					.212,-3	-.641,-3	.325,-3
36	.519.-4	-.766,-4	.139,-3					.163,-3	-.357,-3	.248,-3
37	.226,-3	-.715,-4	-.253,-3					.276,-3	.747,-3	.987,-4
38	-.273,-3	-.693,-4	-.121,-3					.340,-3	.123,-2	.101,-3
39	-.697,-3	.118,-3	.406,-3					.297,-3	.302,-3	.432,-3
40	-.708,-3	.518,-4	.454,-3					.217,-3	-.287,-3	.210,-3
41	-.671,-3	-.145,-3	.152,-3					.113,-3	-.621,-3	-.992,-4
42	-.363,-3	-.130,-3	.148,-3					.138,-3	-.326,-3	.380,-3
43	-.120,-3	.199,-3	.217,-3					.152,-3	.124,-3	.405,-3
44	-.535,-4	.203,-3	.688,-4					-.108,-4	-.132,-3	.182,-3
45	.554,-4	.289,-3	-.207,-3					-.163,-3	-.364,-3	-.560,-4
46	.321,-4	-.222,-4	-.232,-3					-.151,-3	.190,-3	-.221,-3
47	-.154,-3	-.177,-3	-.723,-4					.896,-4	.456,-3	-.181,-3
48	-.234,-3	-.559,-4	-.592,-4					.166,-3	.242,-3	-.165,-3
49	-.203,-3	-.287,-3	.704,-4					.714,-4	.533,-4	-.582,-3
50	-.153,-3	-.352,-3	.196,-3					.237,-3	-.265,-3	-.746,-3
51	.115,-4	-.104,-3	.153,-3					.564,-3	-.253,-3	-.461,-3
52	.792,-4	-.372,-4	.599,-4					.293,-3	.976,-4	-.189,-3
53	-.157,-4	-.128,-3	-.603,-4					-.101,-3	.393,-3	-.278,-3
54	-.104,-3	-.130,-3	-.179,-3					-.137,-3	.347,-3	-.287,-3
55	-.206,-3	-.116,-3	.416,-4					.677,-4	.245,-3	-.176,-3
56	-.910,-4	-.199,-4	.108,-3					.250,-3	.344,-4	.194,-4
57	.762,-4	.201,-3	-.928,-4					.251,-3	-.402,-4	.107,-3
58	.126,-3	.186,-3	-.129,-3					.311,-3	-.265,-4	-.428,-3
59	-.102,-4	.477.-4	.995,-5					.226,-3	.336,-3	-.617,-3
60	-.175,-3	-.747,-4	.946,-4					.100,-3	.457,-3	- 431,-3

Run No. 65 ; v component

	Separation Distance (m.)									
N	6	12	18	24	36	42	48	72	84	90
00	.186,-1	.179,-1	.302,-1					.122,-1	.809,-2	.122,-1
01	.116,-1	.121,-1	.161,-1					.978,-2	.690,-2	.101,-1
02	.583,-2	.658,-2	.568,-2					.466,-2	.331,-2	.539,-2
03	.667,-2	.499,-2	.678,-2					.144,-2	-.332,-3	-.964,-3
04	.750,-2	.412,-2	.413,-2					-.161,-2	-.937,-3	-.917,-3
05	.726,-2	.537,-2	.250,-2					-.888,-3	.279,-3	-.319,-4
06	.501,-2	.740,-2	.212,-2					-.256,-2	-.281,-3	-.155,-2
07	.160,-2	.510,-2	.282,-3					-.220,-2	.883,-3	.288,-3
08	.186,-2	.339,-2	-.105,-2					-.236,-2	.138,-2	.114,-3
09	.312,-2	.471,-2	-.186,-2					-.493,-2	-.253,-2	-.369,-2
10	.363,-2	.404,-2	-.302,-2					-.278,-2	-.329,-2	-.626,-2
11	.329,-2	.177,-2	-.212,-2					.372,-3	-.988,-3	-.229,-2
12	.176,-2	.112,-2	-.695,-3					.382,-2	.148,-2	-.275,-3
13	.396,-3	.116,-2	-.129,-2					.447,-2	.129,-2	-.345,-2
14	-.77_,-3	.124,-2	-.139,-2					.243,-2	.370,-3	-.296,-2
15	.578,-3	.725,-3	-.117,-2					.383,-3	.308,-4	-.251,-2
16	.344,-3	-.295,-3	-.358,-2					.138,-2	.963,-3	-.855,-3
17	-.124,-2	-.689,-3	-.419,-2					.200,-2	.147,-2	.751,-3
18	-.149,-2	-.637,-3	-.690,-3					.170,-2	-.954,-4	.589,-3
19	-.131,-2	.525,-3	-.479,-3					.825,-3	-.630,-3	.427,-3
20	-.131,-3	.361,-3	-.224,-2					.417,-4	.270,-4	.174,-2
21	.465,-4	-.156,-2	-.146,-2					.502,-3	.124,-2	.618,-3
22	-.798,-3	-.174,-2	-.231,-3					.700,-3	.187,-2	-.746,-3
23	-.107,-2	-.111,-2	-.166,-3					.216,-3	.135,-2	-.877,-3
24	-.814,-3	-.127,-2	.547,-3					.122,-3	-.104,-3	-.460,-3
25	-.163,-2	-.185,-2	.211,-3					.387,-3	.128,-3	.390,-3
26	-.218,-2	-.148,-2	.138,-3					-.112,-3	.811,-4	.992,-3
27	-.282,-2	-.809,-3	.435,-3					.485,-4	-.309,-3	.143,-2
28	-.285,-2	-.921,-3	.896,-4					-.805,-4	-.543,-3	-.922,-4
29	-.231,-2	-.587,-3	.337,-3					.749,-3	.102,-4	-.790,-3
30	-.176,-2	-.281,-3	.733,-3					.130,-2	-.207,-3	.354,-3
31	-.111,-2	-.485,-3	.341,-3					.231,-3	-.983,-3	.306,-3
32	-.150,-2	-.668,-3	.692,-3					-.344,-5	-.575,-3	.932,-5
33	-.110,-2	-.104,-2	.113,-2					.399,-3	-.620,-4	.660,-3
34	-.897,-3	-.122,-2	.989,-3					.168,-3	-.404,-3	.511,-3
35	-.801,-3	-.629,-3	.244,-3					.391,-3	-.205,-3	.969,-4
36	-.824,-3	-.276,-3	.264,-3					.611,-5	.197,-3	-.608,-4
37	-.118,-2	-.529,-3	.777,-3					-.900,-4	-.242,-3	-.109,-5
38	-.432,-3	-.734,-3	.232,-3					.485,-3	-.790,-3	.155,-3
39	-.386,-3	-.467,-3	-.430,-3					.760,-3	-.106,-2	.237,-3
40	-.840,-3	-.619,-4	-.347,-3					.489,-3	-.805,-3	.375,-3
41	-.851,-3	.109,-3	-.282,-3					.591,-3	-.844,-3	-.260,-3
42	-.503,-3	.706,-4	-.444,-3					.304,-3	-.848,-3	-.619,-3
43	-.465,-4	.325,-3	-.383,-3					-.212,-3	-.829,-3	-.680,-3
44	-.318,-3	.183,-3	-.216,-3					.318,-3	-.246,-3	-.507,-3
45	-.407,-3	.287,-3	-.850,-4					.409,-3	.377,-3	-.193,-3
46	-.132,-3	.474,-3	-.122,-3					-.399,-3	.184,-3	-.236,-3
47	-.315,-3	.411,-3	-.217,-3					-.133,-3	.928,-4	-.308,-3
48	-.141,-3	.523,-3	.205,-4					.362,-3	.178,-4	-.162,-3
49	.256,-4	.493,-3	.455,-3					.433,-3	.145,-4	-.102,-3
50	-.535,-4	.315,-3	.483,-3					.318,-3	.964,-5	-.251,-3
51	-.138,-3	-.240,-3	.567,-3					-.106,-3	.913,-4	-.401,-3
52	-.851,-4	.267,-4	.367,-3					-.509,-3	-.227,-4	-.895,-3
53	-.141,-3	.581,-3	.357,-3					-.805,-3	-.514,-3	-.733,-3
54	-.156,-3	.899,-3	.160,-3					-.246,-3	-.281,-3	-.375,-3
55	.461,-3	.740,-3	.192,-3					.488,-3	.279,-3	-.362,-4
56	.935,-3	.211,-3	-.160,-3					.430,-3	.444,-3	-.124,-5
57	.996,-3	-.580,-3	- 720,-4					.162,-3	.308,-3	-.658,-4
58	.423,-3	-.504,-3	.159,-3					.417,-4	.158,-3	-.285,-3
59	.188,-3	.429,-4	-.875,-4					.167,-3	.244,-3	-.321,-3
60	.133,-3	.210,-3	-.154,-3					.260,-3	.382,-3	-.247,-3

Run No. 60 ; u component

N	Separation Distance (m.) 6	12	18	24	36	42	48	72	84	90
00	.122,-1	.630,-2	.681,-2	.718,-2	.482,-2	.883,-2	.116,-1	.102,-1	.897,-2	.117,-1
01	.891,-2	.229,-2	.229,-2	.315,-2	.238,-2	.391,-2	.591,-2	.511,-2	.480,-2	.696,-2
02	.472,-2	-.431,-3	.230,-3	-.406,-3	.116,-2	.117,-2	.147,-2	.288,-3	-.224,-3	.128,-2
03	.235,-2	-.730,-3	-.505,-3	-.498,-3	.145,-2	.190,-2	.111,-2	.265,-2	-.633,-3	-.225,-2
04	.103,-2	-.255,-3	-.977,-3	.201,-2	.187,-2	.205,-2	-.210,-2	.495,-2	.191,-2	-.334,-2
05	.170,-2	.118,-2	.731,-3	.231,-2	.249,-2	.138,-2	-.258,-2	.363,-2	.209,-2	-.600,-3
06	.144,-2	.184,-2	.488,-3	.245,-2	.156,-2	.152,-2	-.295,-2	.176,-2	.348,-3	-.672,-4
07	.195,-3	.128,-2	-.318,-3	.330,-2	.552,-3	.202,-2	-.382,-2	-.519,-5	-.232,-4	-.205,-4
08	-.501,-3	.866,-3	-.432,-3	.336,-2	.117,-2	.199,-2	-.930,-3	-.496,-3	-.105,-3	.958,-3
09	-.796,-3	.558,-4	-.295,-3	.360,-2	.140,-3	.898,-4	.115,-2	.449,-4	.954,-3	.156,-2
10	.134,-3	.915,-4	.597,-3	.268,-2	-.111,-2	-.910,-3	.217,-2	.581,-3	.977,-3	.240,-2
11	.101,-2	.446,-3	.813,-3	.160,-2	-.412,-3	-.364,-3	.568,-3	-.116,-2	.659,-3	.215,-2
12	.905,-3	.351,-3	.129,-3	.138,-2	.777,-3	-.478,-4	-.113,-2	-.106,-2	.100,-2	.120,-2
13	.665,-3	.482,-3	.467,-3	.153,-2	.118,-2	.407,-4	-.525,-3	.247,-3	.696,-3	.835,-3
14	.418,-4	.101,-2	.169,-3	.439,-3	.146,-4	-.215,-3	.243,-3	.231,-3	-.346,-3	-.147,-3
15	-.499,-3	.132,-2	.230,-3	-.124,-2	-.126,-2	.528,-3	-.292,-5	-.265,-3	-.658,-3	-.795,-3
16	-.881,-3	.811,-3	.571,-3	-.785,-3	-.375,-3	.410,-3	-.328,-3	-.123,-3	-.218,-3	-.103,-2
17	-.178,-2	.374,-3	.268,-3	-.228,-3	.282,-3	-.279,-3	.504,-3	.385,-3	.104,-2	-.120,-2
18	-.180,-2	.481,-3	-.209,-3	-.743,-3	.414,-4	.256,-3	-.240,-3	-.234,-3	.858,-3	-.433,-3
19	-.900,-3	.672,-3	-.363,-3	-.169,-3	.105,-3	.311,-3	.916,-3	-.278,-4	.246,-5	.693,-4
20	-.524,-3	.422,-3	-.262,-3	.810,-3	.304,-3	-.604,-3	-.928,-3	-.982,-4	-.479,-3	.412,-3
21	-.344,-3	.183,-3	-.262,-3	.934,-3	-.192,-3	-.730,-3	-.489,-3	-.121,-3	-.423,-3	.561,-3
22	-.259,-3	.135,-3	-.416,-4	.806,-3	-.437,-3	-.419,-3	.240,-3	.567,-3	-.487,-3	.384,-4
23	-.156,-3	.327,-3	.120,-3	.799,-3	-.193,-3	-.785,-4	.531,-3	.490,-3	-.236,-3	-.175,-3
24	.457,-4	.222,-4	.115,-3	-.291,-4	-.284,-3	-.349,-3	.206,-3	.601,-3	.605,-3	-.434,-4
25	.115,-4	-.138,-4	-.338,-3	-.373,-3	.751,-5	-.361,-3	-.605,-4	.331,-3	.[illegible]9,-3	-.872,-4
26	.129,-3	.443,-4	-.384,-3	.155,-4	.241,-3	-.467,-4	-.421,-3	.592,-4	-.425,-4	.895,-3
27	.692,-4	.290,-3	.113,-3	.553,-4	-.403,-3	.153,-3	.802,-4	.500,-3	.100,-3	.599,-3
28	.256,-4	.217,-3	.172,-3	.140,-3	-.672,-3	.171,-3	.586,-3	.397,-3	.319,-3	.476,-3
29	.137,-3	-.373,-4	-.107,-3	.740,-4	-.508,-3	.190,-3	.845,-3	-.228,-3	.455,-3	.274,-3
30	.178,-3	-.493,-5	-.600,-4	-.983,-4	-.211,-3	.187,-3	.599,-3	-.149,-3	.411,-3	.177,-3
31	.273,-4	.508,-4	.191,-5	-.231,-4	.553,-4	.317,-5	.382,-3	.483,-4	.102,-3	-.552,-4
32	-.795,-4	.563,-4	.390,-4	.176,-3	.255,-3	-.120,-5	.719,-3	.686,-4	.979,-4	-.198,-3
33	-.104,-3	.282,-3	.191,-5	.624,-4	.287,-3	-.318,-4	.276,-3	-.131,-3	-.114,-3	-.102,-3
34	-.122,-3	.463,-3	-.204,-3	-.263,-3	-.209,-3	-.182,-4	.689,-4	.154,-4	-.205,-3	.176,-3
35	.346,-4	.950,-4	-.149,-3	-.140,-3	-.370,-3	.307,-3	.385,-3	.309,-3	-.170,-3	.539,-3
36	.190,-5	-.100,-3	-.528,-4	.107,-3	.141,-3	.179,-3	.617,-3	.441,-4	-.234,-3	.238,-5
37	-.611,-4	-.598,-4	-.775,-4	-.849,-5	.217,-3	.124,-3	.354,-3	-.143,-3	-.961,-4	-.371,-4
38	-.124,-4	-.101,-3	-.515,-4	-.437,-4	.075,-4	.196,-3	-.102,-4	-.371,-4	-.667,-4	.192,-4
39	.103,-3	-.865,-4	-.319,-4	-.766,-6	.191,-3	.901,-4	-.350,-3	.119,-3	-.192,-3	.326,-4
40	.193,-3	.387,-4	-.476,-4	.523,-5	.149,-3	.665,-4	-.290,-3	.354,-4	-.873,-4	-.370,-5
41	.267,-3	.470,-4	-.106,-3	-.532,-4	-.162,-3	.312,-4	-.155,-3	.184,-4	-.316,-5	-.795,-4
42	.174,-3	-.760,-4	-.112,-3	.147,-3	-.462,-3	-.198,-3	-.102,-3	.216,-4	.216,-4	-.581,-4
43	.692,-4	-.755,-4	.805,-4	.323,-3	-.256,-3	-.108,-3	-.366,-3	-.297,-3	-.775,-4	-.315,-4
44	-.144,-4	-.442,-4	.154,-3	.217,-3	.716,-4	.119,-3	-.353,-3	-.193,-3	-.104,-3	-.870,-4
45	-.226,-6	.298,-4	.860,-4	.562,-4	.141,-4	.163,-3	.682,-4	.785,-4	-.926,-4	-.118,-3
46	-.220,-4	.667,-4	-.243,-4	.394,-4	-.102,-3	.375,-4	.261,-3	.118,-3	-.186,-3	-.107,-3
47	-.741,-5	.248,-5	-.127,-3	-.134,-4	-.315,-4	-.101,-3	.111,-3	.147,-3	-.163,-3	-.163,-3
48	-.112,-4	-.511,-4	-.848,-4	-.742,-6	.745,-4	-.333,-3	-.513,-4	.114,-3	-.953,-4	-.500,-4
49	-.305,-4	.289,-5	-.407,-4	.111,-4	.113,-3	-.225,-3	.849,-4	-.330,-4	.533,-4	.196,-3
50	-.261,-4	.155,-4	-.103,-4	.174,-4	.121,-3	.181,-3	.465,-3	-.128,-3	.210,-3	.282,-3
51	-.415,-4	-.602,-4	.139,-3	-.571,-5	-.478,-4	.159,-3	.220,-3	-.519,-4	.152,-3	.167,-3
52	-.361,-4	-.527,-4	.838,-4	-.148,-4	.826,-4	-.730,-4	-.193,-3	.688,-4	.110,-3	.754,-4
53	-.178,-4	-.630,-6	-.822,-5	.634,-4	.596,-4	.440,-4	.163,-3	.165,-3	.210,-3	-.365,-4
54	-.696,-4	.138,-3	-.716,-4	.136,-4	-.136,-3	.202,-3	.297,-3	.148,-3	.226,-3	-.221,-3
55	-.947,-4	.203,-3	.242,-4	-.525,-4	-.323,-3	.287,-3	.190,-3	-.105,-3	.208,-4	-.131,-3
56	-.106,-4	-.195,-4	.839,-4	.100,-3	-.263,-3	.236,-3	.353,-4	-.154,-3	.325,-4	-.902,-4
57	.109,-3	-.100,-3	.637,-4	-.489,-4	.129,-4	-.365,-4	.334,-4	.184,-4	.177,-3	.574,-5
58	.875,-4	.108,-4	.662,-4	-.131,-3	.104,-3	-.231,-3	-.235,-3	.234,-3	.294,-4	.237,-3
59	-.416,-6	-.415,-5	.269,-5	.903,-4	.186,-4	-.166,-3	-.189,-3	.213,-3	-.133,-3	.266,-3
60	-.560,-3	-.475,-4	-.785,-4	.194,-3	-.436,-4	-.402,-4	-.743,-4	.147.-3	-.146,-3	.139,-3

Run No. 66 ; v component

N	Separation Distance (m.)									
	6	12	18	24	36	42	48	72	84	90
00	.467,-1	.526,-1	.532,-1	.899,-1	.820,-1	.794,-1	.709,-1	.497,-1	.392,-1	.393,-1
01	.216,-1	.236,-1	.237,-1	.366,-1	.368,-1	.355,-1	.321,-1	.243,-1	.181,-1	.171,-1
02	.138,-2	.182,-2	.101,-2	-.204,-2	.266,-2	.298,-2	.676,-3	.355,-2	-.464,-3	.312,-3
03	.108,-2	.363,-2	.135,-2	.116,-2	.176,-2	.326,-2	.403,-3	.714,-3	-.265,-2	.622,-4
04	.123,-2	.337,-2	.951,-3	.576,-3	.702,-3	.297,-2	.438,-2	-.155,-2	-.219,-2	.591,-3
05	.112,-2	.304,-2	.149,-2	.339,-3	-.639,-3	.181,-2	.387,-2	-.304,-2	-.155,-2	-.210,-3
06	.130,-2	.324,-2	.134,-2	.141,-2	.744,-4	-.268,-3	-.190,-2	-.156,-2	-.107,-2	-.994,-3
07	.219,-2	.218,-2	-.397,-3	.293,-2	-.243,-3	-.154,-2	-.841,-2	-.127,-2	-.320,-2	-.880,-3
08	.163,-2	.103,-2	-.796,-3	.878,-3	-.174,-2	-.112,-2	-.924,-2	-.173,-3	-.220,-2	-.123,-2
09	.942,-3	.123,-2	-.551,-3	.929,-3	-.450,-3	-.201,-3	-.702,-2	.021,-2	.553,-3	-.854,-3
10	.151,-2	.358,-2	-.251,-3	-.644,-4	.910,-3	-.122,-3	-.243,-2	.110,-2	.121,-2	.466,-3
11	.305,-3	.120,-2	.494,-4	-.207,-2	-.110,-3	-.754,-3	.777,-3	-.878,-3	.439,-2	.128,-3
12	-.255,-3	-.953,-3	.160,-3	-.256,-2	-.308,-3	-.229,-2	.142,-2	.546,-3	.310,-2	-.153,-2
13	.622,-3	.111,-2	.256,-2	-.198,-2	-.336,-3	-.229,-2	-.656,-4	.211,-2	.275,-4	-.172,-2
14	.105,-2	.173,-2	.121,-2	.043,-3	-.527,-3	-.685,-3	-.293,-3	.164,-2	-.133,-2	-.553,-3
15	.106,-2	.161,-2	.111,-3	.109,-2	-.328,-3	-.285,-3	.214,-2	.592,-3	-.121,-3	.123,-2
16	.140,-2	.520,-3	.300,-3	.489,-3	-.115,-3	-.105,-2	.198,-2	.569,-3	.161,-2	.148,-2
17	.283,-3	.156,-4	.333,-3	.592,-3	.884,-3	-.193,-3	.119,-2	.207,-4	.967,-3	.868,-3
18	-.420,-4	-.420,-3	.179,-4	.445,-3	.145,-2	.211,-3	.148,-2	.485,-3	.542,-3	-.938,-4
19	-.285,-3	-.244,-3	.200,-3	-.890,-3	.389,-3	-.143,-3	.354,-3	.130,-2	-.844,-3	.126,-3
20	-.652,-4	.285,-3	.282,-3	-.102,-2	.190,-3	.338,-3	-.751,-3	.644,-3	-.345,-3	.152,-2
21	.437,-3	.208,-3	-.108,-4	.101,-3	-.173,-3	.103,-2	-.687,-3	.699,-3	.504,-3	.824,-3
22	.447,-3	-.396,-3	-.237,-3	.380,-3	.227,-3	.526,-3	-.563,-3	.174,-2	.533,-3	-.191,-3
23	-.507,-3	-.319,-3	.595,-3	.246,-3	.123,-2	-.736,-4	-.693,-3	.190,-2	.239,-3	.829,-3
24	-.106,-2	-.176,-3	.938,-3	.693,-3	.885,-3	.763,-3	-.177,-2	.865,-3	.199,-3	.133,-3
25	-.121,-2	-.128,-3	.630,-3	.596,-3	.255,-3	.613,-3	-.151,-2	.142,-3	.181,-3	-.552,-3
26	-.126,-2	-.278,-3	.937,-3	.232,-3	.157,-4	.344,-3	-.244,-3	.512,-4	.240,-3	-.105,-2
27	-.824,-3	-.718,-3	.828,-3	.129,-3	.344,-4	.143,-3	.577,-3	.674,-3	.982,-4	-.965,-3
28	-.100,-2	-.459,-3	.213,-3	-.256,-3	.322,-3	.603,-4	-.304,-3	.277,-2	-.110,-6	.180,-3
29	-.156,-2	.757,-4	-.740,-3	.562,-4	-.413,-3	.860,-4	-.348,-3	.206,-2	-.451,-3	-.371,-3
30	-.173,-2	-.295,-3	-.552,-3	.537,-3	-.749,-3	.273,-3	-.180,-3	.130,-2	-.565,-3	-.303,-3
31	-.128,-2	-.716,-3	-.177,-3	.448,-3	-.164,-3	-.809,-3	-.798,-3	.103,-2	-.316,-3	.534,-3
32	-.489,-4	-.539,-3	-.202,-3	.170,-3	.241,-3	-.145,-2	-.737,-3	.545,-3	.305,-3	.638,-3
33	.304,-4	.764,-3	.579,-3	.900,-4	-.473,-3	-.244,-3	-.804,-4	.331,-3	.116,-2	.515,-3
34	-.677,-3	.898,-3	.480,-3	-.464,-4	-.466,-3	.401,-3	.991,-4	-.197,-3	.156,-2	.388,-4
35	-.425,-3	-.619,-4	.402,-3	-.269,-3	-.410,-3	.459,-3	-.669,-3	-.729,-3	.176,-2	-.457,-3
36	.938,-4	-.333,-3	.489,-3	-.381,-3	-.547,-3	.380,-3	-.503,-3	-.361,-3	.155,-2	-.339,-3
37	.121,-3	-.180,-3	.113,-3	-.990,-4	-.163,-3	.107,-3	.314,-3	.195,-3	.121,-2	-.113,-3
38	-.346,-3	-.369,-4	.180,-3	-.439,-3	.117,-3	-.162,-4	-.937,-4	.177,-3	.545,-3	-.482,-3
39	-.551,-3	.783,-4	.213,-3	-.745,-3	.334,-3	-.112,-3	-.378,-3	.249,-3	.243,-4	-.812,-3
40	-.199,-3	-.650,-4	.271,-3	-.272,-3	.331,-3	-.301,-3	-.252,-3	-.212,-3	-.655,-4	-.250,-3
41	-.848,-4	-.702,-3	.362,-3	.505,-5	.662,-4	-.435,-3	-.228,-3	-.447,-4	.736,-4	.352,-3
42	.467,-4	-.342,-4	.168,-3	-.715,-4	-.424,-3	-.729,-3	-.734,-3	.284,-3	.406,-3	.335,-3
43	.122,-2	.441,-3	.347,-3	.134,-3	-.567,-3	-.530,-3	-.538,-3	.259,-3	.194,-3	.104,-3
44	.127,-2	-.908,-4	.421,-3	.370,-3	-.196,-3	-.207,-3	-.272,-3	.240,-3	.289,-3	.659,-4
45	.455,-3	.147,-3	.373,-3	.623,-4	-.317,-4	.138,-3	-.211,-3	.593,-3	.528,-3	-.133,-3
46	-.289,-4	.371,-3	.110,-3	-.522,-3	-.448,-4	447,-3	.217,-4	.114,-3	.309,-3	-.855,-3
47	-.963,-4	-.545,-4	-.175,-3	-.190,-3	-.250,-3	.888,-4	.266,-3	-.339,-3	.807,-3	-.790,-3
48	.110,-3	-.344,-3	.183,-3	.921,-4	.413,-3	.159,-3	.834,-3	.323,-3	.146,-2	-.535,-3
49	.245,-4	-.554,-3	.738,-3	.543,-3	.666,-3	.721,-3	.721,-3	.411,-3	.120,-2	-.226,-3
50	.513,-4	.575,-4	.422,-3	.558,-3	.202,-3	.799,-3	-.114,-4	.382,-4	.603,-3	-.134,-3
51	-.963,-4	.247,-3	-.168,-4	.159,-3	-.124,-3	.134,-4	.245,-3	.180,-3	.474,-3	-.219,-4
52	.359,-3	-.798,-4	-.307,-3	.252,-3	-.345,-3	-.413,-3	.897,-4	.615,-3	.302,-3	-.301,-4
53	.561,-3	-.561,-4	.123,-3	.322,-3	-.372,-3	-.757,-3	-.739,-3	.129,-3	.537,-3	-.336,-3
54	.400,-3	.377,-3	.697,-3	.253,-3	-.224,-3	-.604,-3	-.994,-3	-.467,-3	.498,-3	.208,-3
55	.617,-3	.560,-4	.385,-3	.264,-4	-.399,-3	-.480,-3	-.102,-2	-.136,-3	.316,-3	.536,-3
56	.815,-3	-.272,-3	.882,-4	-.189,-3	-.420,-3	-.424,-3	-.816,-3	-.131,-3	.329,-3	.343,-3
57	.651,-3	-.122,-3	.151,-3	-.198,-4	-.285,-3	-.459,-3	-.576,-3	-.603,-3	.240,-3	.155,-3
58	.558,-3	.103,-3	.271,-3	.570,-3	-.172,-3	-.357,-3	-.618,-3	-.132,-3	.283,-3	.165,-4
59	.524,-3	.177,-3	.131,-4	.572,-3	.254,-3	-.211,-3	-.524,-4	.519,-3	.296,-3	-.308,-4
60	.441,-3	.134,-3	-.441,-4	417,-3	.297,-3	-.211,-3	.279,-3	.488,-3	.430,-3	.205,-4

Run No. 67 ; u component

	Separation Distance (m.)									
N	1	4	5	16	20	21	64	80	84	85
00	.602,-1	.349,-1	.402,-1	.431,-1	.339,-1	.566,-1	-.127,-1	.248,-1	.015,-2	.204,-2
01	.760,-1	.770,-2	.121,-1	.231,-1	.510,-1	.426,-1	-.600,-2	112.-1	.487,-2	.502,-2
02	.908,-1	-.164,-1	-.411,-2	.124,-1	.424,-1	.264,-1	.757,-2	-.567,-2	.365,-2	.145,-2
03	.682,-1	.272,-3	.150,-1	.119,-1	.267,-1	.150,-1	.130,-1	-.671,-2	.299,-2	-.159,-2
04	.416,-1	.936,-2	.112,-1	-.619,-3	.161,-1	.577,-2	.127,-3	.346,-2	-.115,-2	-.358,-2
05	.482,-1	.817,-2	.988,-2	-.661,-2	.122,-1	.123,-1	-.147,-1	.342,-2	-.476,-2	-.106,-1
06	.569,-1	-.612,-3	-.383,-2	.297,-3	.126,-1	.103,-1	-.144,-1	-.522,-2	-.345,-2	-.319,-2
07	.491,-1	-.662,-2	-.105,-1	.122,-2	.459,-3	-.499,-2	-.280,-2	.989,-3	.777,-2	.475,-2
08	.288,-1	-.530,-2	-.534,-2	.266,-2	-.509,-2	-.600,-2	.321,-2	.576,-2	.746,-2	.155,-2
09	.151,-1	-.123,-2	-.107,-2	.699,-3	-.282,-5	-.202,-2	.499,-2	.252,-2	.296,-2	.323,-2
10	.174,-1	.266,-2	.150,-2	.484,-3	.620,-3	-.896,-2	.284,-2	.506,-2	.334,-4	.188,-2
11	.116,-1	.263,-2	-.148,-2	.247,-2	-.379,-3	-.833,-2	.190,-2	.388,-2	-.101,-2	.857,-3
12	.275,-2	-.346,-2	-.353,-2	-.992,-3	-.115,-2	-.394,-2	-.155,-2	.217,-2	.102,-2	-.693,-4
13	.387,-2	-.331,-2	. 48,-3	-.342,-2	-.453,-2	-.371,-2	.160,-2	.262,-2	.375,-2	-.360,-2
14	.371,-2	.332,-2	.320,-2	-.345,-2	-.375,-2	-.183,-2	.269,-2	.184,-2	.554,-2	.366,-2
15	.713,-2	.387,-2	.494,-3	-.127,-2	.322,-3	-.496,-3	.340,-2	.339,-2	.294,-2	.455,-2
16	.810,-2	.271,-2	-.148,-2	.113,-2	-.734,-3	-.160,-2	.411,-2	.452,-2	.272,-2	.914,-3
17	.109,-1	.679,-3	-.375,-2	.317,-2	-.425,-2	-.392,-2	.272,-2	.382,-2	.498,-2	.123,-2
18	.723,-2	.149,-3	-.188,-2	.374,-2	-.473,-2	-.217,-2	-.178,-2	.205,-2	.430,-2	-.959,-3
19	.449,-2	.238,-2	.325,-2	.100,-2	-.360,-3	-.297,-4	-.586,-2	.134,-2	.172,-2	-.786,-3
20	.400,-2	.323,-2	.478,-2	-.104,-2	.220,-3	-.226,-2	-.460,-2	.344,-2	.109,-2	.242,-2
21	.389,-2	.597,-3	.154,-2	.475,-3	.149,-2	-.481,-3	-.215,-2	.339,-2	.143,-3	.342,-2
22	.358,-2	-.161,-2	-.840,-5	.228,-2	.256,-2	.231,-2	-.261,-2	.322,-2	.723,-4	.110,-2
23	.109,-2	-.973,-3	.931,-3	.110,-2	.933,-3	-.394,-4	-.285,-2	.231,-2	.274,-3	-.370,-3
24	.543,-3	.207,-4	.123,-2	-.315,-3	-.757,-5	-.203,-2	-.140,-2	.729,-3	-.156,-3	-.165,-2
25	.155,-2	-.248,-3	.110,-2	.803,-3	-.350,-3	-.112,-2	-.122,-3	-.294,-3	.506,-3	-.747,-3
26	.172,-2	.345,-3	.148,-2	.676,-3	-.122,-2	.540,-3	.976,-3	-.694,-3	.106,-3	-.583,-4
27	.151,-2	.108,-2	.618,-3	-.124,-2	-.748,-3	.814,-3	.231,-2	-.745,-3	-.102,-2	-.830,-3
28	.134,-2	-.354,-3	.441,-3	-.286,-2	-.231,-3	-.109,-2	.892,-3	-.131,-2	.295,-3	-.626,-3
29	.134,-2	-.102,-2	.223,-2	-.289,-2	-.421,-3	-.163,-2	-.210,-3	-.173,-2	.128,-2	-.977,-3
30	.178,-3	-.852,-3	.297,-2	-.223,-2	-.923,-3	-.154,-2	-.516,-3	-.328,-3	.179,-4	-.124,-2
31	-.193,-3	-.281,-2	.130,-2	-.884,-4	-.152,-2	.233,-4	.324,-3	.283,-2	-.155,-2	.792,-3
32	.204,-2	-.156,-2	.217,-5	-.625,-4	-.115,-2	-.502,-3	.698,-3	.164,-2	-.518,-3	.212,-2
33	.236,-2	.260,-3	-.119,-2	-.411,-3	-.208,-3	-.437,-3	-.66 ,-3	-.315,-3	.891,-3	.222,-2
34	.234,-2	.454,-3	-.266,-2	.191,-3	.561,-3	.541,-4	-.150,-3	-.997,-3	.998,-3	.167,-2
35	.320,-2	-.231,-3	-.261,-2	.120,-2	.550,-3	-.101,-3	-.487,-3	-.251,-3	-.156,-5	.505,-3
36	.205,-2	-.453,-3	-.359,-3	.123,-2	-.405,-3	.244,-3	-.549,-3	.125,-2	-.736,-3	-.545,-3
37	.022,-3	-.586,-3	.121,-2	-.547,-3	-.134,-2	-.250,-3	-.848,-3	.131,-2	-.801,-3	.118,-2
38	.628,-3	-.301,-3	.116,-2	-.122,-2	-.138,-3	-.333,-3	-.992,-3	-.110,-2	-.701,-3	.156,-2
39	-.180,-4	-.172,-3	-.353,-3	-.960,-3	-.486,-3	-.205,-3	.747,-4	-.253,-2	-.254,-3	.132,-2
40	.141,-3	-.407,-3	-.188,-2	-.558,-3	-.115,-2	-.517,-3	-.489,-3	-.118,-2	.215,-3	.237,-2
41	.143,-2	-.342,-3	-.947,-3	-.502,-3	-.845,-3	.704,-4	-.296,-3	-.784,-3	.634,-3	.178,-2
42	.858,-3	-.414,-4	.329,-3	-.354,-5	.230,-3	.553,-3	-.131,-3	-.119,-2	.359,-3	.696,-3
43	.183,-3	.276,-3	.737,-3	.524,-4	.260,-3	.292,-3	.610,-4	-.994,-3	.172,-3	.158,-3
44	.249,-3	.928,-4	.791,-4	-.151,-3	.148,-3	.436,-3	.635,-3	-.289,-3	.683,-3	-.460,-3
45	.887,-3	.191,-3	-.575,-4	.264,-3	.561,-3	.117,-3	.645,-3	-.128,-3	.743,-3	-.125,-2
46	.103,-2	-.353,-3	-.491,-4	.364,-3	.524,-3	-.424,-3	-.252,-3	-.120,-2	.412,-3	-.806,-3
47	.713,-3	-.952,-3	-.615,-3	.106,-2	-.278,-3	-.568,-3	-.456,-3	-.195,-2	-.399,-3	.688,-3
48	.942,-3	-.453,-3	-.457,-3	.129,-2	-.569,-3	-.688,-3	-.109,-2	-.145,-2	-.622,-3	.515,-3
49	.113,-2	.693,-3	-.341,-4	.291,-3	-.208,-5	-.269,-3	-.164,-2	.135,-3	.597,-3	.138,-4
50	.100,-2	.568,-3	.936,-3	-.856,-4	-.215,-5	.695,-3	-.118,-2	.923,-3	.458,-3	.223,-4
51	.836,-3	.205,-3	.929,-3	.804,-4	-.222,-3	-.334,-3	-.105,-2	.895,-3	-.948,-3	.359,-3
52	.500,-4	.737,-4	.606,-3	.375,-3	.195,-3	-.127,-2	-.328,-3	-.139,-4	-.172,-2	.293,-3
53	.481,-3	-.296,-3	.133,-2	.845,-3	-.107,-4	-.200,-3	.144,-3	-.402,-3	-.135,-2	-.786,-3
54	.133,-2	-.114,-3	.116,-2	.969,-3	-.739,-4	.818,-3	.432,-3	.724,-3	-.317,-4	.127,-4
55	.106,-2	.532,-3	-.955,-4	.101,-2	.606,-3	.638,-3	.448,-3	.913,-3	.237,-3	.837,-3
56	-.150,-3	.264,-3	-.331,-3	.909,-3	.478,-3	.794,-4	-.152,-3	.262,-3	-.775,-3	.358,-3
57	-.215,-3	.218,-3	.208,-3	.358,-3	.327,-3	-.374,-3	.111,-3	.906,-3	-.398,-3	.101,-2
58	.627,-3	-.230,-3	.141,-3	-.759,-3	.328,-3	.925,-4	.293,-3	.563,-3	-.381,-3	.987,-3
59	.358,-3	-.337,-3	.238,-3	-.627,-3	.125,-3	.305,-3	-.914,-4	.455,-3	-.486,-3	.361,-3
60	-.647,-4	-.555,-4	.404,-3	.165,-4	.153,-3	.105,-4	-.104,-3	.650,-4	-.864,-3	.572,-4

Run No. 67 ; v component

	Separation Distance (m.)									
N	1	4	5	16	20	21	64	80	84	85
00	-.504,-2	.525,-1	.167	.172	.205,-1	.108	.192	.292	.173,-1	.180
01	.664,-2	.303,-1	.929,-1	.859,-1	.140,-1	.537,-1	.958,-1	.145	.166,-1	.832,-1
02	.132,-1	.106,-1	.103,-1	.105,-1	.195,-2	.102,-1	.119,-1	.172,-1	.299,-2	-.437,-2
03	.104,-1	.121,-1	.157,-1	-.161,-2	-.917,-3	.144,-1	.647,-2	.212,-1	-.818,-2	-.930,-2
04	.563,-2	.151,-1	.154,-2	-.351,-2	.428,-2	.824,-2	.281,-2	.104,-1	-.389,-2	-.499,-2
05	.271,-2	.148,-1	-.284,-2	.624,-3	.581,-2	-.233,-2	-.385,-3	.718,-2	-.905,-3	-.257,-2
06	.447,-2	.114,-1	.369,-2	.186,-3	.255,-2	-.309,-2	-.793,-3	.114,-1	-.353,-2	-.310,-2
07	.686,-2	-.146,-2	-.385,-4	.684,-4	.307,-2	-.841,-3	-.304,-2	-.132,-2	-.314,-2	-.512,-2
08	.650,-2	-.490,-2	-.625,-2	-.105,-2	.255,-2	.396,-2	.983,-3	-.900,-2	.324,-2	.851,-2
09	.579,-2	.313,-3	-.963,-3	-.148,-2	.221,-2	.789,-2	.298,-2	-.134,-2	.498,-2	.148,-1
10	.375,-2	.594,-3	.173,-2	-.906,-3	.342,-3	.596,-2	.331,-2	-.402,-2	.415,-2	.835,-2
11	-.896,-3	-.107,-3	.553,-2	-.233,-2	-.875,-3	-.424,-3	.395,-2	-.621,-2	.429,-2	-.115,-3
12	.368,-2	-.117,-2	.458,-2	-.129,-2	-.199,-2	-.466,-2	-.158,-2	-.104,-2	-.526,-2	-.620,-2
13	.552,-2	-.920,-3	.173,-2	-.152,-2	-.628,-3	-.194,-2	-.594,-2	.176,-3	-.644,-2	-.540,-2
14	.629,-2	-.692,-3	.194,-2	-.266,-2	.178,-2	.135,-2	-.529,-2	-.195,-2	-.259,-4	.223,-2
15	.114,-1	-.175,-2	.154,-2	-.102,-2	.114,-2	.138,-2	-.343,-2	-.980,-4	.142,-3	.946,-2
16	.922,-2	-.698,-3	.122,-2	-.863,-3	-.440,-3	.410,-3	-.187,-2	.799,-3	-.358,-2	.194,-2
17	.466,-2	.359,-3	.187,-2	-.410,-3	-.167,-2	-.881,-3	-.116,-2	-.829,-3	-.699,-3	-.612,-2
18	.224,-2	.806,-3	.410,-2	-.100,-3	-.149,-2	-.141,-2	.990,-4	-.951,-3	.874,-3	-.114,-4
19	.203,-2	.993,-3	.399,-2	.315,-3	-.853,-3	-.254,-2	-.148,-3	-.123,-2	-.543,-3	.386,-2
20	.279,-2	.569,-3	.213,-2	.526,-3	-.191,-2	-.432,-2	.832,-3	-.196,-2	-.141,-2	.271,-2
21	.296,-2	.477,-3	.456,-3	.961,-3	-.210,-2	-.196,-2	.189,-2	-.198,-2	-.100,-2	.406,-2
22	.276,-2	.892,-3	-.127,-2	.493,-3	-.151,-2	-.307,-3	-.184,-3	-.117,-3	-.363,-3	.312,-2
23	.219,-2	.349,-3	-.359,-2	.202,-3	.161,-3	.105,-3	-.407,-3	.891,-3	-.810,-3	.571,-3
24	.189,-2	-.194,-3	-.317,-2	-.206,-5	.604,-3	.295,-4	.102,-3	.298,-2	-.179,-2	-.186,-3
25	.142,-2	-.997,-4	-.262,-3	.105,-3	-.125,-2	.208,-3	-.608,-3	.197,-2	-.196,-2	.221,-2
26	.190,-2	.397,-3	-.809,-3	.124,-4	-.429,-3	-.713,-3	-.522,-3	.184,-3	-.153,-2	.519,-2
27	.356,-2	.221,-3	-.255,-2	-.322,-4	-.249,-6	-.237,-2	.678,-3	-.176,-2	-.128,-2	.250,-2
28	.722,-2	.267,-3	.613,-3	-.187,-3	-.522,-3	-.280,-2	.147,-2	-.249,-2	.101,-3	-.189,-2
29	.517,-2	.276,-3	.682,-3	-.199,-3	-.914,-3	-.292,-2	.161,-2	-.556,-3	-.140,-3	-.212,-2
30	.378,-2	.695,-3	.135,-2	-.516,-4	-.516,-3	-.195,-2	.168,-2	.859,-4	-.218,-2	-.170,-2
31	.354,-2	.104,-2	.172,-2	-.252,-4	.665,-3	.938,-3	.217,-2	-.292,-3	-.122,-2	.286,-2
32	.175,-2	.109,-2	.334,-3	.446,-3	.132,-2	.679,-3	.164,-2	.249,-3	.354,-3	.424,-2
33	.102,-2	.745,-3	.430,-3	.715,-3	.115,-2	-.450,-3	.504,-3	.207,-2	-.701,-3	-.373,-3
34	.138,-2	.600,-3	.148,-2	.524,-3	.655,-3	-.373,-3	.340,-3	.140,-2	-.454,-3	.708,-4
35	.438,-3	.541,-3	.142,-2	-.236,-4	-.639,-4	-.103,-2	-.181,-3	-.614,-3	-.338,-3	.332,-2
36	.724,-3	.142,-3	.130,-2	-.348,-3	-.902,-3	-.807,-3	-.922,-4	-.303,-3	-.482,-3	.283,-2
37	.868,-3	-.135,-3	-.239,-3	-.374,-3	-.202,-3	.695,-3	.119,-2	-.856,-3	-.162,-2	.176,-2
38	.685,-3	.325,-3	-.120,-2	-.384,-3	.511,-3	.838,-3	.450,-3	-.943,-3	-.266,-2	.372,-3
39	.185,-3	.217,-3	-.709,-3	-.288,-3	.627,-3	.727,-3	-.546,-3	-.786,-3	-.216,-2	-.251,-3
40	.640,-5	-.109,-3	.537,-3	.172,-3	.532,-3	.192,-4	-.199,-3	-.331,-3	-.114,-2	-.181,-2
41	.279,-3	-.778,-4	.125,-3	.308,-3	-.711,-4	-.659,-4	.126,-2	-.249,-3	-.830,-3	-.324,-2
42	.296,-3	-.139,-3	-.381,-4	.143,-3	-.414,-3	.930,-4	.767,-3	-.286,-3	.219,-3	-.965,-3
43	.298,-3	-.244,-3	.156,-3	-.332,-4	-.235,-4	-.982,-4	-.144,-3	-.723,-3	.161,-3	.141,-2
44	.449,-6	-.400,-3	-.260,-3	-.371,-3	.292,-3	.594,-3	.198,-3	-.103,-2	-.278,-3	.817,-3
45	-.147,-3	-.127,-3	-.620,-3	-.890,-4	.177,-3	.436,-3	.409,-3	-.108,-2	-.747,-3	.716,-3
46	.589,-3	-.603,-4	-.835,-3	.295,-3	-.800,-4	-.578,-3	-.277,-3	-.444,-3	-.368,-3	-.773,-3
47	.915,-3	.117,-3	-.265,-3	.201,-3	-.141,-3	-.434,-3	-.590,-3	-.174,-3	-.446,-3	.372,-3
48	.557,-3	.685,-4	.238,-3	.660,-4	.170,-3	-.153,-3	-.411,-3	-.113,-3	-.180,-2	.210,-2
49	.532,-3	-.259,-4	.729,-4	-.142,-5	.437,-3	.121,-3	-.905,-3	-.571,-3	-.203,-2	.938,-3
50	.369,-3	.364,-3	-.590,-3	.426,-4	.402,-3	.201,-3	-.105,-2	-.584,-3	-.566,-3	-.324,-3
51	.119,-2	.773,-3	-.402,-3	.163,-3	.755,-3	.136,-2	-.126,-4	-.504,-4	.187,-3	.796,-3
52	.130,-2	.963,-3	-.229,-3	.302,-3	.108,-2	.917,-3	.508,-3	.883,-4	-.571,-3	.214,-2
53	.433,-3	.553,-3	-.644,-3	.597,-4	-.152,-4	-.272,-3	-.353,-4	.162,-3	-.495,-3	.320,-2
54	.586,-3	.129,-3	-.139,-3	-.385,-3	-.298,-3	-.566,-3	-.202,-3	.886,-3	.443,-3	.192,-2
55	.239,-3	.228,-3	.319,-3	-.274,-3	.121,-3	-.428,-3	-.154,-3	.896,-3	.573,-4	.670,-4
56	.391,-3	.350,-3	.981,-3	-.150,-3	.662,-3	-.444,-3	.555,-4	.757,-3	.591,-3	.235,-3
57	.755,-3	.325,-3	.130,-2	-.384,-5	.385,-3	-.339,-3	.262,-3	.692,-3	.127,-2	.363,-3
58	.868,-3	.536,-3	.960,-3	.230,-3	.243,-3	-.317,-3	-.381,-3	.246,-3	.146,-2	.120,-2
59	-.230,-3	.569,-5	.203,-3	.139,-3	.129,-3	-.371,-3	-.231,-3	.699,-4	.120,-2	.481,-3
60	-.541,-3	-.415,-3	.854,-4	.178,-4	.202,-3	-.319,-3	-.157,-3	-.766,-4	.484,-3	-.375,-3

Run No. 68 ; u component

Separation Distance (m.)

N	1	4	5	16	20	21	64	80	84	85
00	.579,-1	.723,-1	.723,-1	.801,-1	.619,-1	.616,-1	.656,-1	.817,-1	.566,-1	.613,-1
01	.328,-1	.389,-1	.362,-1	.421,-1	.324,-1	.320,-1	.318,-1	.391,-1	.290,-1	.316,-1
02	.109,-1	.724,-2	.685,-2	.806,-2	.522,-2	.544,-2	.454,-2	.382,-2	.578,-2	.507,-2
03	.743,-2	.204,-2	.484,-2	.141,-2	.695,-3	.110,-2	.250,-2	.407,-3	.342,-2	.210,-2
04	.636,-2	.975,-3	.343,-2	-.829,-3	-.343,-3	-.329,-3	.485,-3	-.100,-2	.161,-2	.160,-2
05	.733,-2	.216,-2	.308,-2	-.631,-3	-.587,-3	-.544,-3	.115,-2	-.167,-2	-.147,-2	-.558,-3
06	.567,-2	.147,-2	.141,-2	-.595,-3	-.296,-3	-.623,-3	.155,-2	-.183,-2	-.227,-2	-.200,-2
07	.419,-2	-.527,-3	-.768,-3	-.121,-2	-.911,-3	-.460,-3	.197,-3	-.131,-2	-.182,-3	-.261,-3
08	.325,-2	-.603,-3	.660,-4	-.536,-3	-.394,-3	.227,-3	-.518,-5	-.110,-2	.703,-3	.600,-3
09	.262,-2	-.605,-3	.543,-3	.113,-2	-.195,-3	-.492,-3	.153,-4	-.737,-4	.330,-3	-.393,-3
10	.186,-2	-.675,-3	.527,-3	.154,-2	-.735,-3	-.875,-3	-.895,-3	.587,-3	.641,-3	-.120,-3
11	.188,-2	-.262,-3	-.344,-4	.963,-3	-.779,-3	-.302,-3	-.145,-2	.858,-4	.638,-3	.826,-3
12	.219,-2	-.148,-3	-.552,-3	-.258,-3	-.724,-3	-.374,-3	-.634,-3	.110,-3	-.599,-4	585,-3
13	.228,-2	.172,-3	.251,-3	-.127,-3	-.694,-3	-.517,-3	.403,-3	-.193,-3	.650,-4	.976,-5
14	.228,-2	.157,-3	.729,-3	.365,-3	-.310,-3	-.226,-3	.608,-3	-.458,-3	.731,-3	.329,-3
15	.166,-2	-.430,-3	.686,-3	.297,-3	.240,-3	.397,-3	.323,-3	.328,-3	.445,-3	.211,-4
16	.143,-2	-.829,-3	.805,-4	.331,-3	.283,-3	.115,-3	-.287,-4	.185,-4	-.429,-3	-.112,-3
17	.133,-2	-.805,-3	.892,-7	.116,-3	-.276,-3	-.498,-3	-.502,-2	-.964,-3	.674,-4	.961,-3
18	.112,-2	-.408,-3	.107,-4	.203,-3	-.388,-3	-.284,-3	-.286,-3	-.102,-2	.531,-3	.105,-2
19	.413,-3	-.300,-3	.300,-3	.107,-3	-.207,-3	-.388,-3	-.130,-3	-.753,-3	-.385,-5	.237,-3
20	-.442,-4	-.330,-3	.676,-3	-.277,-3	.198,-4	-.496,-3	-.241,-3	-.645,-3	-.636,-3	-.411,-3
21	.344,-3	.287,-3	.747,-3	.418,-4	.177,-4	-.452,-4	-.455,-3	-.331,-3	-.502,-3	-.307,-3
22	.682,-3	.476,-3	.254,-3	.151,-3	-.213,-3	.150,-3	-.273,-3	.238,-3	.156,-3	.114,-3
23	.611,-3	.518,-4	-.117,-3	-.264,-3	-.236,-3	.136,-3	.182,-4	.562,-3	.249,-3	.469,-3
24	.377,-3	-.270,-3	-.435,-4	-.278,-3	-.873,-4	-.110,-3	-.790,-4	.667,-3	-.266,-3	.106,-3
25	.354,-3	-.162,-3	.144,-3	.176,-3	.131,-3	-.711,-4	-.192,-3	.383,-3	-.126,-3	-.688,-4
26	.461,-3	.553,-4	.247,-3	.541,-3	.113,-3	.139,-3	-.272,-3	.149,-3	.265,-3	.114,-3
27	.343,-3	.804,-4	-.918,-5	.383,-3	.585,-4	.128,-3	-.382,-5	.147,-3	.317,-3	.634,-4
28	.323,-3	-.338,-3	-.238,-3	.344,-3	-.187,-3	.815,-4	.878,-4	-.973,-4	.155,-3	-.255,-4
29	.270,-3	-.265,-3	-.338,-4	.243,-3	-.636,-4	.731,-4	.123,-3	-.415,-3	-.997,-4	.745,-4
30	.342,-3	.124,-3	.131,-3	.211,-3	.100,-3	.261,-4	.316,-3	.129,-4	-.282,-3	.680,-4
31	.205,-3	.657,-4	.261,-3	.110,-3	.162,-4	-.597,-4	.363,-3	.369,-3	-.119,-3	.106,-3
32	.858,-4	.536,-4	.210,-3	.139,-3	-.440,-3	-.770,-4	.169,-3	.111,-3	-.455,-4	.549,-4
33	.187,-3	.139,-3	.140,-3	.129,-3	-.788,-4	-.226,-4	.385,-4	-.467,-4	-.765,-4	.498,-4
34	.120,-3	.106,-3	.741,-4	.191,-3	-.605,-4	-.345,-4	.190,-3	.101,-3	.162,-4	.108,-3
35	.425,-4	-.144,-3	-.304,-4	.161,-3	.816,-4	-.980,-4	.256,-3	.209,-3	-.102,-3	-.544,-4
36	.136,-3	-.248,-3	.309,-5	.891,-4	.165,-3	.539,-4	.365,-4	.193,-3	-.130,-3	-.250,-4
37	.114,-3	-.351,-4	.136,-3	.181,-3	.108,-3	.107,-3	-.127,-3	.226,-3	.349,-4	.104,-3
38	.123,-3	.319,-3	.237,-3	.317,-3	.114,-3	.609,-4	.237,-4	.302,-3	.653,-4	.167,-3
39	.204,-3	.281,-3	.276,-3	.221,-3	.139,-3	.233,-4	.770,-4	.151,-3	-.967,-4	.570,-4
40	.235,-3	-.247,-4	.453,-4	.132,-3	-.345,-4	-.153,-3	.144,-3	-.100,-4	-.150,-3	-.205,-3
41	.258,-3	-.125,-3	-.243,-4	.117,-3	-.649,-4	-.630,-4	.121,-3	.892,-4	-.102,-3	-.125,-3
42	.290,-3	.213,-4	.107,-3	.448,-4	.408,-4	.174,-3	.322,-4	.899,-4	.981,-4	.235,-4
43	.188,-3	.128,-3	.190,-3	.298,-4	.471,-4	.151,-3	-.227,-4	-.181,-4	.160,-3	-.120,-3
44	-.286,-5	.569,-4	.102,-3	-.716,-5	.245,-4	.207,-3	-.122,-3	-.951,-5	.795,-4	-.573,-4
45	-.114,-3	-.392,-4	-.206,-6	-.464,-4	.747,-5	.239,-3	.450,-4	.339,-4	.579,-4	.162,-3
46	-.730,-4	.278,-5	.403,-4	.496,-4	-.833,-5	.102,-3	.940,-4	-.205,-4	.102,-3	.101,-3
47	.763,-4	-.125,-4	.583,-4	.116,-3	-.212,-4	-.146,-4	-.102,-3	-.159,-3	.390,-4	.202,-5
48	.103,-3	-.156,-4	.328,-4	.924,-4	.246,-4	.435,-4	-.158,-3	-.934,-4	-.519,-4	.565,-4
49	.109,-3	-.351,-4	.111,-3	.172,-4	.129,-3	.107,-4	-.487,-4	.176,-3	-.120,-3	.592,-4
50	.233,-3	-.967,-4	.219,-4	-.150,-4	.117,-5	.918,-4	-.306,-4	.366,-4	-.907,-4	-.280,-4
51	.200,-3	-.145,-3	.476,-4	.521,-4	-.254,-4	.530,-4	.259,-4	-.221,-4	-.536,-4	-.214,-4
52	.853,-4	-.929,-4	.467,-4	.841,-4	-.839,-4	-.239,-4	.100,-3	.372,-4	-.544,-4	.205,-5
53	.105,-3	-.689,-5	.360,-4	.309,-4	-.102,-3	.262,-4	.155,-4	-.898,-4	-.188,-4	-.224,-5
54	.642,-5	.144,-5	.496,-4	-.334,-5	-.873,-4	.662,-4	-.156,-4	-.124,-3	-.177,-4	.146,-4
55	-.838,-5	-.626,-4	.429,-4	-.192,-4	-.595,-4	.247,-4	.642,-4	.147,-3	-.111,-3	-.295,-4
56	.172,-3	-.115,-3	-.607,-4	.165,-4	-.881,-4	-.235,-4	.109,-3	.303,-3	-.159,-3	-.130,-3
57	.211,-3	-.993,-4	-.142,-3	.161,-4	.210,-5	-.400,-4	.816,-4	.188,-3	-.140,-3	-.137,-3
58	.117,-3	.185,-4	-.877,-4	.478,-4	.426,-4	-.351,-4	-.287,-4	.117,-3	-.332,-4	-.865,-4
59	.647,-4	.860,-4	-.115,-3	.269,-5	-.439,-4	.501,-4	.131,-4	.146,-3	.362,-4	-.110,-3
60	.507,-4	.848,-4	-.137,-3	-.385,-4	-.113,-3	.772,-4	.766,-4	.130,-3	.175,-4	-.136,-3

Run No. 68 ; v component

Separation Distance (m.)

N	1	4	5	16	20	21	64	80	84	85
00	.255,-1	.623,-1	.38.,-1	.761,-1	.304,-1	.199,-1	-.120,-1	-.922,-2	.237,-2	.202,-2
01	.204,-1	.334,-1	.190,-1	.451,-1	.126,-1	.696,-2	-.711,-2	.187,-2	.213,-2	.323,-2
02	.103,-1	.132,-2	.265,-2	.115,-1	-.371,-2	-.198,-2	-.540,-2	.296,-2	-.345,-2	.267,-2
03	.902,-2	-.471,-2	-.356,-2	.419,-2	.861,-3	-.265,-2	-.611,-2	-.334,-2	-.374,-2	.232,-2
04	.807,-2	-.415,-2	-.471,-2	.419,-2	-.308,-2	-.313,-2	-.684,-2	-.483,-2	.694,-3	.127,-2
05	.159,-2	-.250,-2	-.225,-2	.711,-3	-.477,-2	-.576,-2	-.550,-2	-.359,-2	.308,-3	.323,-2
06	-.101,-2	-.448,-3	-.315,-2	.347,-2	.713,-4	-.628,-2	-.249,-2	-.250,-2	-.223,-3	.456,-2
07	.287,-2	.803,-4	-.115,-2	-.746,-4	.879,-3	-.572,-2	.116,-2	.122,-2	.296,-2	.307,-2
08	.359,-2	-.118,-2	-.161,-2	-.250,-2	.704,-4	-.269,-2	.380,-2	-.223,-3	.674,-3	.299,-2
09	-.183,-3	-.190,-3	-.453,-3	-.111,-2	-.798,-3	-.768,-2	.113,-2	-.562,-3	-.130,-2	.321,-2
10	-.593,-3	-.177,-2	.245,-2	-.165,-2	-.205,-2	-.976,-2	.128,-2	.456,-2	-.308,-2	.411,-2
11	.102,-2	-.715,-3	.566,-3	.320,-2	-.257,-2	-.227,-2	.817,-2	.391,-2	-.304,-2	.595,-2
12	.126,-2	-.264,-3	-.603,-3	.387,-2	-.179,-3	.610,-3	.473,-2	.434,-2	-.120,-2	.303,-2
13	-.706,-4	.131,-2	-.107,-2	.556,-2	.122,-2	-.245,-2	.139,-2	.301,-2	.293,-3	.655,-3
14	.566,-3	.243,-2	-.172,-2	.217,-3	-.100,-2	-.248,-2	.908,-3	-.106,-3	.821,-3	.564,-2
15	.168,-2	.230,-2	-.330,-3	-.252,-2	-.262,-2	-.185,-2	-.174,-3	-.167,-2	-.131,-3	.606,-2
16	.242,-2	.131,-2	.938,-3	-.229,-2	-.216,-2	-.965,-3	-.276,-3	-.200,-3	.478,-3	.703,-3
17	.252,-2	.492,-3	.946,-4	.384,-4	-.127,-2	-.237,-3	-.831,-3	-.599,-3	.103,-2	.190,-2
18	.208,-2	-.436,-3	-.566,-4	.925,-3	-.303,-3	.133,-2	-.217,-3	-.147,-2	-.919,-3	.129,-2
19	.178,-2	-.301,-3	.144,-2	.129,-2	.591,-3	.231,-2	.672,-3	-.214,-2	-.156,-2	.182,-2
20	.134,-2	.261,-3	.931,-3	.128,-2	.504,-5	.140,-2	.204,-2	-.178,-2	-.137,-2	.257,-2
21	.127,-2	.902,-4	.377,-3	-.804,-4	-.374,-3	.030,-3	.320,-2	.959,-3	-.600,-3	.257,-2
22	.133,-2	.253,-4	.112,-3	-.441,-3	-.640,-3	-.882,-4	.209,-2	.103,-2	.271,-3	.297,-2
23	.118,-2	.117,-3	-.272,-3	-.159,-3	-.278,-3	-.424,-3	.970,-4	-.421,-3	-.233,-3	.208,-2
24	.899,-3	.307,-3	-.358,-4	-.171,-3	.357,-3	-.904,-4	-.822,-3	.220,-3	-.202,-2	-.677,-3
25	.628,-3	.457,-3	-.580,-3	.216,-3	.924,-3	-.256,-3	-.387,-3	-.475,-3	-.957,-3	-.691,-3
26	.263,-3	.242,-3	-.869,-3	.365,-3	.373,-3	-.123,-3	-.396,-4	-.182,-2	.524,-3	.121,-2
27	-.223,-3	-.180,-3	.211,-3	.147,-3	-.118,-3	.101,-2	.194,-3	-.107,-2	.311,-3	.586,-3
28	-.131,-3	-.324,-3	.821,-3	.415,-3	-.187,-3	.169,-2	.571,-3	.152,-3	.128,-2	.825,-3
29	-.658,-6	-.245,-4	-.197,-3	.448,-3	-.156,-3	.125,-2	.729,-4	.466,-3	.165,-2	.464,-3
30	-.457,-3	.386,-3	-.823,-3	.145,-3	-.727,-4	.535,-3	-.184,-3	.665,-3	.395,-3	-.203,-3
31	-.239,-3	.219,-3	-.673,-4	-.578,-4	-.296,-4	.746,-4	.241,-3	.507,-3	-.596,-3	-.556,-3
32	.373,-3	-.201,-3	.769,-3	-.602,-3	.147,-3	.127,-3	.261,-3	.449,-3	-.168,-3	.177,-3
33	.424,-3	-.657,-4	.727,-4	-.512,-3	.171,-3	.485,-3	.291,-3	.306,-3	.121,-3	.859,-3
34	.379,-3	.537,-4	-.526,-3	.376,-3	-.778,-5	.802,-3	.268,-3	-.216,-3	-.619,-4	.570,-3
35	.386,-3	.391,-4	-.339,-3	.136,-3	-.161,-3	.223,-3	-.314,-3	-.292,-3	-.559,-5	-.384,-3
36	.449,-3	-.774,-4	-.269,-3	-.225,-3	-.933,-4	-.567,-3	-.563,-3	.230,-4	-.519,-5	-.744,-3
37	.430,-3	-.246,-3	-.534,-3	-.750,-4	.134,-3	-.746,-3	-.776,-3	.671,-4	-.402,-3	-.950,-3
38	.196,-3	-.155,-3	-.193,-3	.168,-3	.121,-3	.783,-4	-.939,-3	-.628,-3	-.284,-3	-.459,-3
39	.188,-3	-.123,-3	-.743,-4	.334,-4	.509,-4	.438,-3	-.134,-3	-.117,-2	-.512,-4	.759,-3
40	.214,-3	-.101,-3	-.194,-3	.101,-3	-.207,-4	-.110,-4	.142,-3	-.493,-3	-.105,-3	.858,-3
41	.853,-4	-.761,-4	-.716,-3	.246,-4	.221,-3	-.269,-3	.201,-3	-.137,-3	-.214,-3	.612,-3
42	.762,-4	-.761,-4	-.760,-4	-.227,-3	.281,-3	-.251,-3	.278,-4	-.559,-4	-.188,-3	.227,-3
43	.147,-3	-.221,-3	.408,-3	-.203,-3	.196,-3	-.384,-4	-.220,-3	-.377,-3	.101,-3	-.384,-3
44	.316,-3	-.139,-3	.117,-4	.593,-5	.139,-3	-.322,-3	-.209,-3	-.169,-3	.547,-4	.422,-3
45	.319,-3	.258,-6	-.133,-4	.927,-4	.165,-3	-.731,-3	-.221,-3	.268,-3	-.711,-4	.735,-3
46	-.165,-4	-.432,-4	.126,-4	-.125,-3	.264,-3	-.742,-3	-.408,-3	.146,-3	.161,-3	.684,-3
47	-.157,-3	-.820,-4	-.157,-3	-.683,-4	.191,-3	-.372,-3	-.112,-3	.266,-3	-.506,-4	.492,-3
48	-.114,-3	-.904,-4	-.500,-3	.247,-3	-.429,-4	-.312,-3	.208,-3	.585,-3	-.576,-3	-.203,-3
49	.189,-4	-.761,-4	-.347,-3	.410,-3	-.353,-3	-.635,-3	.159,-3	-.726,-4	-.648,-3	-.715,-3
50	-.281,-3	-.124,-3	.652,-4	.221,-3	-.247,-3	-.578,-3	-.322,-4	-.179,-3	-.217,-3	-.745,-3
51	-.706,-4	-.764,-4	.125,-4	-.566,-4	.320,-4	-.378,-3	.121,-3	.408,-4	.242,-3	-.133,-3
52	.247,-3	.361,-4	-.209,-3	-.644,-4	-.334,-4	-.248,-3	.307,-3	.387,-3	.371,-3	.192,-3
53	.280,-3	.107,-4	-.381,-3	.255,-3	-.973,-4	.589,-4	.454,-3	.642,-3	.580,-4	-.351,-3
54	.393,-3	-.170,-3	-.278,-3	.378,-3	-.128,-3	.344,-3	.112,-3	.435,-3	-.202,-3	.104,-3
55	-.723,-4	-.179,-3	-.171,-3	.908,-4	.151,-3	-.164,-3	-.317,-3	.499,-3	-.437,-3	.110,-2
56	-.279,-3	-.121,-3	-.313,-3	-.672,-4	.238,-3	-.310,-3	-.251,-3	.202,-3	-.415,-3	.145,-2
57	-.255,-3	-.115,-3	-.460,-3	-.266,-4	.372,-4	.141,-3	.123,-3	-.250,-3	-.150,-3	.125,-2
58	-.120,-3	-.200,-3	-.168,-3	.702,-4	-.101,-4	.415,-3	.440,-3	-.304,-4	-.102,-3	.691,-3
59	.827,-4	-.873,-4	-.140,-3	-.116,-3	.620,-4	.135,-3	.513,-3	.369,-4	.245,-4	.536,-3
60	.145,-3	-.901,-5	-.108,-3	-.169,-3	.904,-4	-.441,-4	.429,-3	-.158,-3	.171,-3	.487,-3

TABLE 17.10

Smoothed quadrature-spectral density estimates, UQ_n, with the phase angle lagged downwind for N-S orientation of the anemometer line; to the east for E-W orientation. The results are identified by eddy wind component; harmonic number, n; and separation distance of anemometer pairs. (Pages 611 to 672.) Units are m^2/sec^2/unit frequency interval for all data except Runs 7 and 8 which are in units of percent of covariance/unit frequency interval. To convert n to a cyclical frequency, multiply by 1/128 cycles/second.

Run No. 6 ; u component

N	Separation Distance (m.)									
	6	12	18	24	36	42	48	72	84	90
00	.000	.000	.000	.000	.000	.000	.000	.000	.000	.000
01	.652,-3	.171,-1	.165,-1	.1[illegible],-1	.342,-1	.267,-1	.539,-1	.347,-1	.454,-1	.427,-1
02	-.436,-2	.166,-1	.104,-1	.212,-1	.326,-1	.192,-1	.617,-1	.452,-1	.395,-1	.296,-1
03	-.991,-2	.137,-1	.687,-2	.228,-1	.345,-1	.235,-1	.499,-1	.370,-1	.300,-1	.266,-1
04	-.148,-1	.161,-1	.611,-2	.296,-1	.336,-1	.244,-1	.344,-1	.270,-1	.221,-1	.203,-1
05	-.182,-1	.229,-1	.719,-2	.274,-1	.340,-1	.242,-1	.242,-1	.245,-1	.187,-1	.192,-1
06	-.172,-1	.165,-1	.224,-2	.171,-1	.201,-1	.126,-1	.192,-1	.156,-1	.026,-2	.851,-2
07	-.113,-1	.940,-2	.191,-2	.123,-1	.834,-2	.687,-2	.117,-1	-.105,-2	-.533,-2	-.699,-2
08	-.930,-2	.103,-1	.452,-2	.150,-1	.107,-1	.981,-2	.318,-2	-.897,-2	-.402,-2	-.827,-2
09	-.734,-2	.145,-1	.845,-2	.155,-1	.136,-1	.107,-1	-.624,-2	-.126,-1	-.471,-2	-.503,-2
10	-.415,-2	.117,-1	.855,-2	.117,-1	.787,-2	.507,-2	-.695,-2	-.102,-1	-.601,-2	-.354,-2
11	-.480,-2	.104,-1	.100,-1	.754,-2	.243,-2	.231,-2	-.398,-2	-.103,-1	-.658,-2	-.774,-2
12	-.781,-2	.107,-1	.689,-2	.345,-2	-.146,-2	-.119,-2	-.254,-2	-.644,-2	-.288,-2	-.732,-2
13	-.795,-2	.949,-2	.314,-2	.323,-2	.116,-2	.116,-2	-.713,-2	-.326,-2	.219,-2	-.806,-3
14	-.712,-2	.745,-2	.299,-2	.736,-2	.327,-2	.242,-2	-.924,-2	-.132,-2	.208,-2	-.124,-3
15	-.514,-2	.433,-2	.349,-2	.794,-2	.245,-3	.103,-2	-.943,-2	-.327,-3	-.598,-4	.125,-2
16	-.767,-2	.312,-2	.299,-2	.540,-2	-.163,-2	.208,-2	-.893,-2	-.183,-2	-.566,-3	.303,-2
17	-.100,-1	.410,-2	.359,-2	.804,-3	.109,-2	.336,-2	-.796,-2	-.236,-2	.431,-3	-.314,-3
18	-.734,-2	.362,-2	.108,-2	-.111,-2	.824,-3	.548,-3	-.373,-2	-.173,-2	.706,-3	-.319,-2
19	-.413,-2	.262,-2	-.789,-4	-.113,-2	-.140,-2	-.193,-2	.862,-3	-.133,-2	.594,-3	-.151,-4
20	-.406,-2	.253,-2	.230,-2	-.781,-3	-.981,-3	-.121,-2	.626,-3	-.258,-3	.791,-3	.935,-3
21	-.606,-2	.484,-2	.467,-2	-.658,-3	.121,-2	.432,-3	.868,-3	.148,-2	-.175,-2	-.249,-2
22	-.769,-2	.495,-2	.521,-2	-.432,-3	.356,-2	.177,-2	.293,-2	.408,-3	-.151,-2	-.309,-2
23	-.725,-2	.262,-2	.471,-2	-.897,-3	.223,-2	.184,-2	.290,-2	-.114,-2	.473,-3	-.401,-3
24	-.626,-2	.205,-2	.344,-2	.453,-4	.174,-4	-.501,-4	.268,-2	.365,-3	.642,-3	.114,-4
25	-.653,-2	.172,-2	.240,-2	-.787,-3	-.180,-4	-.675,-3	.106,-2	.874,-3	.146,-2	.701,-3
26	-.745,-2	.157,-2	.327,-2	-.199,-2	.582,-4	.485,-3	-.104,-2	-.104,-2	.196,-2	-.654,-3
27	-.606,-2	.137,-2	.398,-2	-.326,-2	.925,-3	.408,-3	-.177,-2	-.154,-2	.242,-2	-.157,-2
28	-.470,-2	.983,-3	.281,-2	-.242, 2	.807,-4	.977,-5	-.988,-3	.945,-3	.150,-2	.427,-3
29	-.479,-2	-.378,-3	.165,-2	-.125,-2	-.652,-3	-.243,-3	.736,-3	.856,-3	.118,-2	.194,-2
30	-.584,-2	-.891,-3	.562,-3	-.108,-2	.265,-3	-.149,-2	.124,-2	-.696,-4	.124,-2	.834,-3
31	-.647,-2	.311,-3	.208,-2	-.262,-2	.210,-2	-.138,-2	-.252,-3	-.257,-3	-.374,-3	-.116,-2
32	-.463,-2	.148,-3	.171,-2	-.313,-2	.111,-2	-.587,-3	-.226,-2	-.283,-3	-.142,-2	-.421,-3
33	-.453,-2	-.170,-2	.122,-3	-.156,-2	-.540,-3	-.131,-2	-.274,-3	.113,-3	.436,-3	.154,-2
34	-.637,-2	-.186,-2	.218,-3	-.927,-3	-.758,-3	-.124,-2	.110,-2	-.347,-4	.118,-2	.219,-4
35	-.694,-2	.375,-3	.624,-3	-.105,-2	.196,-3	-.101,-2	.262,-3	-.841,-3	.560,-3	.597,-3
36	-.467,-2	.745,-3	.108,-2	.319,-3	-.369,-3	-.339,-3	-.165,-3	-.595,-3	-.523,-3	.202,-2
37	-.401,-2	.260,-3	.115,-2	.756,-3	-.139,-2	-.368,-3	.225,-3	.460,-3	-.140,-2	.131,-2
38	-.487,-2	-.196,-2	.744,-3	.825,-3	-.149,-2	-.707,-3	.936,-3	.202,-3	-.586,-3	.526,-3
39	-.458,-2	-.187,-2	.225,-3	.350,-3	-.195,-2	.201,-3	.713,-3	.501,-3	.894,-3	.328,-3
40	-.355,-2	-.153,-2	-.11[illegible],-2	-.707,-4	-.109,-3	-.342,-4	-.676,-3	.655,-3	.560,-3	-.228,-3
41	-.357,-2	-.168,-2	-.102,-2	-.515,-3	.110,-2	.547,-4	-.364,-5	.754,-3	-.665,-4	-.756,-3
42	-.354,-2	-.185,-2	.719,-3	-.529,-3	.381,-3	.544,-3	.142,-2	.119,-2	.597,-3	-.317,-3
43	-.334,-2	-.130,-2	.954,-3	-.407,-3	-.405,-3	-.132,-3	.150,-3	-.236,-4	.558,-3	.617,-3
44	-.283,-2	-.653,-3	-.128,-3	-.528,-3	-.130,-3	-.105,-2	-.297,-3	-.258,-3	.451,-3	.961,-3
45	-.200,-2	-.134,-2	.301,-3	-.362,-3	.664,-3	-.907,-3	-.128,-2	-.320,-3	.433,-3	.204,-2
46	-.187,-2	-.152,-2	.836,-3	.506,-3	.738,-3	-.101,-2	-.170,-2	-.380,-3	-.229,-3	.110,-2
47	-.133,-2	-.813,-3	.459,-3	.118,-2	.408,-3	-.128,-2	-.145,-2	-.106,-2	-.672,-3	.496,-4
48	-.679,-3	-.376,-3	-.164,-3	.113,-2	-.832,-3	-.185,-3	-.387,-4	-.830,-3	-.466,-3	-.259,-3
49	-.121,-2	-.681,-4	.150,-3	.732,-3	-.512,-3	.900,-3	.540,-3	.784,-3	-.213,-3	-.453,-3
50	-.981,-3	-.482,-3	.826,-3	.285,-3	-.513,-3	.434,-3	-.112,-3	.110,-2	-.195,-3	-.556,-3
51	-.109,-2	-.152,-2	.946,-3	.627,-3	-.11[illegible],-2	.218,-3	-.743,-3	.172,-3	-.159,-4	-.363,-3
52	-.449,-3	-.156,-2	.257,-4	.673,-3	-.171,-2	.471,-3	-.231,-3	-.450,-3	.357,-3	-.553,-3
53	-.847,-4	-.774,-3	.158,-4	.463,-3	-.911,-3	-.154,-3	.519,-3	-.991,-3	.702,-3	-.123,-2
54	-.251,-3	-.590,-3	.556,-3	.416,-3	-.641,-3	-.114,-3	.947,-3	.680,-4	.492,-3	-.542,-3
55	.429,-3	-.311,-3	.442,-3	-.410,-3	-.410,-3	-.132,-3	.402,-3	-.186,-3	.514,-3	-.240,-3
56	.413,-4	.224,-3	-.661,-4	-.412,-3	-.330,-3	-.520,-3	.352,-3	-.746,-3	.118,-2	-.382,-3
57	-.569,-3	.657,-3	-.272,-3	.184,-3	-.212,-3	-.363,-3	.273,-3	-.619,-3	.102,-2	-.146,-3
58	-.720,-3	.214,-4	-.373,-3	.518,-3	-.593,-4	-.451,-3	.189,-3	-.372,-3	.158,-3	-.791,-3
59	-.859,-3	-.632,-3	.715,-4	.757,-3	-.701,-4	-.499,-3	.488,-3	-.102,-3	-.279,-4	-.652,-3
60	.000	.000	.000	.000	.000	.000	.000	.000	.000	.000

Run No. 6 ; v component

	Separation Distance (m.)									
N	6	12	18	24	36	42	48	72	84	90
00	.000	.000	.000	.000	.000	.000	.000	.000	.000	.000
01	-.112,-1	.179,-1	.927,-2	.639,-2	.307,-1	.199,-1	.721,-1	.597,-1	.954,-1	.872,-1
02	-.815,-2	.184,-1	.123,-1	.311,-2	.277,-1	.187,-1	.624,-1	.474,-1	.758,-1	.689,-1
03	-.623,-2	.166,-1	.129,-1	-.822,-3	.192,-1	.139,-1	.367,-1	.264,-1	.332,-1	.340,-1
04	-.386,-2	.130,-1	.115,-1	.268,-2	.159,-1	.135,-1	.266,-1	.171,-1	.110,-1	.140,-1
05	-.136,-2	.148,-1	.142,-1	.[illegible]91,-2	.177,-1	.170,-1	.172,-1	.850,-2	-.732,-2	-.420,-2
06	-.306,-2	.185,-1	.162,-1	.669,-2	.205,-1	.193,-1	.116,-1	.270,-2	-.142,-1	-.133,-1
07	-.324,-2	.133,-1	.108,-1	.453,-2	.114,-1	.112,-1	.435,-2	.619,-3	-.617,-2	-.650,-2
08	-.334,-2	.906,-2	.626,-2	.301,-2	.606,-2	.640,-2	-.144,-3	-.212,-2	-.871,-3	-.420,-3
09	-.131,-2	.671,-2	.531,-2	.283,-2	.370,-2	.344,-2	-.370,-2	-.410,-2	.439,-3	.111,-2
10	-.629,-3	.576,-2	.469,-2	.267,-2	.347,-2	.121,-2	-.676,-2	-.503,-2	.244,-2	.125,-2
11	-.315,-2	.560,-2	.627,-2	.462,-2	.329,-2	.458,-2	-.922,-2	-.599,-2	.426,-2	.345,-3
12	-.610,-2	.700,-2	.915,-2	.477,-2	.217,-2	.646,-2	-.433,-2	-.378,-2	.269,-2	.372,-3
13	-.565,-2	.465,-2	.824,-2	.244,-2	.163,-2	.404,-2	.399,-3	.685,-3	-.532,-4	-.557,-3
14	-.512,-2	.718,-3	.409,-2	.820,-3	-.335,-3	.186,-2	-.318,-3	.217,-3	-.596,-3	-.264,-3
15	-.315,-2	-.180,-3	.105,-2	.967,-3	-.217,-2	-.136,-3	-.404,-4	-.348,-3	-.201,-3	-.625,-3
16	-.267,-2	-.858,-5	.953,-3	.110,-2	-.304,-2	.191,-2	.123,-2	-.744,-3	-.152,-3	-.101,-2
17	-.403,-2	-.462,-3	.144,-2	.286,-2	-.387,-2	-.271,-2	.194,-2	.631,-3	-.116,-2	-.158,-2
18	-.557,-2	-.121,-2	.168,-3	.249,-2	-.223,-2	-.128,-2	.230,-2	.168,-2	-.199,-2	.681,-3
19	-.497,-2	-.233,-2	.239,-3	.188,-2	-.140,-2	-.317,-3	.101,-2	.630,-3	.214,-3	.275,-2
20	-.387,-2	-.392,-2	.489,-3	.186,-2	-.249,-2	-.234,-2	.138,-2	-.298,-3	.243,-2	.164,-2
21	-.620,-2	-.499,-2	-.129,-2	.206,-2	-.225,-2	-.328,-2	.117,-2	.119,-2	.340,-2	.235,-2
22	-.603,-2	-.386,-2	-.176,-2	.143,-2	-.131,-2	-.152,-2	.121,-2	.155,-2	.658,-3	.500,-3
23	-.303,-2	-.246,-2	-.174,-2	.208,-2	-.757,-3	-.708,-3	.856,-3	-.569,-3	.117,-3	-.360,-3
24	-.351,-2	-.281,-2	-.255,-2	.281,-2	-.913,-3	-.157,-2	-.155,-2	-.179,-3	.240,-4	.416,-3
25	-.398,-2	-.306,-2	-.156,-2	.295,-2	-.788,-3	-.195,-2	-.151,-2	.153,-3	-.341,-3	.202,-3
26	-.236,-2	-.234,-2	.811,-4	.166,-2	-.148,-3	-.716,-3	-.275,-3	-.123,-2	.577,-3	.693,-3
27	-.112,-2	-.203,-2	-.590,-4	.553,-3	.782,-4	-.651,-4	-.415,-3	-.953,-3	.575,-3	.422,-3
28	-.172,-2	-.117,-2	-.970,-3	-.115,-3	.333,-3	.200,-3	-.198,-3	-.252,-3	.296,-3	.189,-3
29	-.293,-2	-.132,-2	-.154,-2	-.423,-3	.656,-3	-.314,-3	-.830,-3	.358,-3	.273,-3	-.607,-4
30	-.223,-2	-.845,-3	-.102,-2	.289,-3	.118,-2	-.221,-3	-.141,-2	.102,-2	.308,-3	.835,-3
31	-.158,-2	-.509,-3	-.955,-3	.113,-2	.241,-2	.462,-3	-.617,-3	.141,-2	.697,-3	.828,-3
32	-.178,-2	.853,-4	-.351,-3	.943,-3	.128,-2	.939,-3	.342,-3	.190,-3	.431,-3	-.124,-2
33	-.208,-2	.830,-3	-.817,-3	.359,-3	-.194,-3	.991,-3	-.347,-3	-.721,-3	.945,-3	-.425,-3
34	-.184,-2	.134,-2	-.644,-3	.695,-3	-.251,-3	-.156,-3	-.881,-3	.691,-3	.886,-3	.513,-3
35	-.133,-2	.169,-2	.567,-3	.196,-2	.234,-3	-.830,-3	-.141,-2	.225,-2	.625,-3	.392,-3
36	-.114,-2	.246,-2	.711,-3	.162,-2	-.871,-4	-.113,-2	-.818,-4	.166,-2	.733,-3	-.285,-3
37	-.168,-2	.169,-2	.401,-3	.651,-3	-.568,-5	-.715,-3	.286,-3	.241,-3	-.545,-3	-.975,-3
38	-.202,-2	.139,-2	.524,-3	.226,-3	.335,-5	.610,-3	-.798,-3	.615,-3	-.156,-2	-.141,-2
39	-.147,-2	.102,-2	.151,-2	.666,-3	-.618,-3	.150,-2	-.762,-3	.660,-3	-.141,-2	-.111,-2
40	-.143,-2	.982,-3	.782,-3	.158,-2	-.134,-2	.117,-2	.320,-3	-.209,-3	-.612,-3	-.165,-4
41	-.185,-2	.605,-3	.438,-3	.116,-2	-.911,-3	.436,-3	-.943,-4	.639,-3	-.184,-3	-.195,-3
42	-.199,-2	.903,-3	.754,-3	-.794,-4	-.267,-3	.210,-3	-.626,-5	.973,-3	.144,-3	.185,-3
43	-.137,-2	.716,-3	-.204,-4	-.253,-3	-.557,-3	.930,-3	-.211,-3	.527,-3	-.837,-3	.308,-3
44	-.900,-3	.768,-3	-.730,-3	.704,-3	-.564,-3	.143,-2	.455,-4	-.610,-3	-.651,-4	.638,-3
45	-.657,-3	.302,-3	-.204,-3	.176,-2	-.163,-2	.166,-2	.644,-3	-.105,-2	.148,-2	-.211,-4
46	-.360,-3	.543,-3	.199,-4	.104,-2	-.125,-2	.113,-2	.469,-3	-.468,-3	.852,-3	-.102,-2
47	-.642,-3	.646,-3	-.641,-3	-.299,-5	.141,-3	.185,-3	-.368,-3	-.692,-3	.427,-3	-.122,-2
48	-.145,-2	.746,-3	.905,-4	-.314,-3	.791,-3	.182,-3	-.122,-2	-.514,-3	.434,-3	-.157,-2
49	-.709,-3	.640,-3	.903,-3	.102,-3	.266,-3	-.328,-3	-.101,-2	.147,-3	.996,-4	-.874,-3
50	-.133,-3	-.122,-4	.419,-3	.379,-3	-.112,-3	-.126,-2	-.457,-3	-.141,-4	.613,-4	.578,-3
51	-.115,-5	-.626,-3	.104,-3	.265,-3	.283,-3	-.875,-3	-.209,-3	.127,-3	.146,-3	.252,-3
52	.419,-4	-.674,-3	.362,-3	.255,-3	.171,-3	-.414,-3	-.303,-3	.422,-3	.161,-3	-.260,-3
53	-.321,-3	-.884,-3	-.215,-3	.219,-3	-.241,-3	.377,-3	.374,-3	.369,-4	-.241,-3	-.502,-4
54	-.393,-3	-.713,-3	-.570,-3	.179,-3	-.214,-3	.601,-3	.758,-3	-.322,-3	-.293,-4	-.511,-3
55	.114,-3	-.800,-3	-.158,-3	.358,-3	.816,-4	.962,-3	.619,-3	-.369,-3	.419,-4	-.162,-2
56	.450,-3	-.226,-2	.664,-3	.105,-2	.493,-3	.574,-3	.901,-5	.101,-3	.797,-3	-.195,-2
57	-.105,-3	-.201,-2	.419,-3	.960,-3	.287,-3	.191,-3	-.100,-3	.574,-3	.195,-2	-.171,-2
58	-.731,-3	-.969,-3	-.362,-3	.782,-3	-.190,-3	-.886,-4	-.998,-3	-.289,-4	.954,-3	-.396,-3
59	-.117,-3	-.820,-3	.208,-3	.844,-3	.129,-3	.504,-3	-.102,-2	-.118,-3	-.578,-4	.154,-3
60	.000	.000	.000	.000	.000	.000	.000	.000	.000	.000

Run No. 7 ; u component

N	Separation Distance (m.) 6	12	18	24	36	48	60	72	84	90
00	.000	.000	.000	.000	.000	.000	.000	.000	.000	.000
01	-.824,-3	.389,-1	.394,-1	.368,-1	.712,-1	.645,-1	.636,-1	.788,-1	.100	.866,-1
02	-.192,-2	.199,-1	.133,-1	.366,-1	.514,-1	.451,-1	.555,-1	.593,-1	.682,-1	.576,-1
03	-.973,-3	.495,-2	.247,-2	.150,-1	.160,-1	.126,-1	.269,-1	.185,-1	.221,-1	.201,-1
04	.122,-2	.153,-2	.196,-2	.113,-1	.662,-2	.593,-2	.149,-1	.656,-2	.760,-2	.853,-2
05	.261,-3	.353,-3	.224,-2	.535,-2	.232,-2	.408,-2	.103,-1	.429,-2	.382,-2	.376,-2
06	-.123,-2	.171,-2	.122,-2	.268,-2	.116,-3	.109,-2	.573,-2	.169,-2	.209,-3	-.629,-3
07	-.187,-2	.448,-2	.227,-2	.337,-2	.114,-2	-.151,-2	.145,-2	.221,-2	-.235,-2	-.237,-2
08	-.493,-3	.508,-2	.445,-2	.241,-2	.312,-2	.602,-3	.275,-3	.540,-2	-.375,-2	-.374,-2
09	.110,-4	.267,-2	.337,-2	.497,-3	.254,-2	.207,-2	-.104,-2	.299,-2	-.213,-2	-.179,-2
10	-.108,-2	.152,-2	.155,-2	.330,-3	-.393,-3	-.179,-3	-.143,-2	.805,-4	-.201,-2	-.910,-3
11	-.182,-2	.271,-2	.229,-2	.373,-3	-.688,-3	-.863,-3	-.113,-2	-.128,-2	-.463,-3	.591,-3
12	-.143,-2	.241,-2	.186,-2	.155,-2	-.244,-3	-.216,-3	.335,-3	-.419,-3	.399,-3	.102,-2
13	-.936,-3	.234,-2	.796,-3	.163,-3	.501,-4	-.300,-4	-.373,-3	-.222,-3	.366,-4	.873,-3
14	-.102,-3	.235,-2	-.748,-4	-.287,-3	-.610,-4	.825,-3	-.806,-3	.468,-3	-.244,-3	.219,-3
15	-.201,-3	.238,-2	.308,-3	.437,-3	-.902,-3	.189,-3	-.889,-3	.660,-3	.242,-4	-.454,-4
16	-.156,-3	.113,-2	.188,-3	.662,-4	-.463,-3	-.560,-3	-.334,-3	.102,-2	-.122,-3	-.103,-3
17	-.311,-5	.809,-3	.207,-3	-.925,-3	-.308,-4	-.535,-3	-.333,-3	.784,-3	-.589,-3	-.127,-3
18	-.547,-3	.342,-3	-.852,-4	.111,-3	.288,-3	-.327,-3	-.767,-4	.386,-3	-.593,-4	-.378,-3
19	-.986,-3	.393,-3	.217,-3	.151,-3	-.971,-4	-.363,-3	.324,-3	-.459,-3	.131,-3	-.698,-3
20	-.792,-3	.245,-3	-.328,-3	.399,-3	-.232,-3	-.972,-4	.164,-3	-.530,-3	-.128,-3	-.579,-3
21	-.236,-3	.524,-3	-.443,-3	.194,-3	.100,-3	.202,-3	-.643,-3	-.772,-3	.345,-3	.197,-3
22	.664,-4	.504,-3	-.317,-3	-.720,-4	.112,-4	.159,-3	-.472,-3	-.975,-5	.445,-3	-.220,-3
23	-.187,-3	.297,-3	-.394,-3	-.585,-3	-.918,-4	-.378,-3	-.365,-3	.142,-3	-.874,-4	-.314,-3
24	-.228,-3	-.148,-3	-.379,-3	-.109,-3	-.530,-4	-.134,-3	.159,-4	-.608,-4	-.697,-3	.155,-3
25	-.184,-3	-.399,-3	-.205,-3	-.347,-5	.164,-3	-.287,-4	-.316,-4	-.224,-3	-.592,-3	.674,-3
26	-.220,-3	-.600,-3	-.237,-3	-.344,-4	.172,-4	-.289,-3	-.219,-3	-.508,-3	-.175,-3	.421,-3
27	-.532,-3	-.681,-4	.287,-3	-.373,-4	-.632,-4	.496,-6	-.446,-3	-.479,-3	.655,-4	-.171,-3
28	-.651,-3	-.692,-4	.161,-3	.317,-4	.594,-3	.613,-3	-.484,-3	.311,-3	.794,-4	-.276,-3
29	-.108,-3	-.282,-3	-.182,-3	-.436,-3	.426,-3	.498,-3	-.536,-3	.504,-3	-.413,-3	.125,-4
30	.137,-4	-.450,-3	-.325,-3	-.373,-3	-.623,-4	.350,-3	-.360,-3	.334,-3	-.222,-3	-.326,-3
31	-.271,-3	-.125,-3	-.427,-3	-.197,-3	-.598,-5	.155,-3	-.109,-3	.591,-3	-.966,-5	-.885,-4
32	-.746,-4	.133,-3	-.193,-3	.186,-4	.324,-4	.205,-3	-.207,-3	.787,-3	-.637,-4	.562,-4
33	.148,-4	.530,-3	.679,-4	.140,-4	.358,-4	.944,-4	-.299,-3	.308,-3	.938,-4	-.175,-3
34	-.307,-3	.613,-3	-.114,-3	.327,-3	.266,-3	-.807,-4	-.128,-3	.104,-3	.598,-4	-.693,-5
35	-.250,-3	.110,-3	-.866,-4	-.383,-4	.396,-3	-.150,-3	.103,-3	-.300,-4	-.164,-3	.101,-3
36	-.365,-4	-.217,-3	-.377,-5	.176,-4	.380,-3	.170,-3	-.254,-6	-.454,-5	-.339,-3	-.116,-3
37	-.530,-6	-.845,-4	.133,-3	-.105,-3	.570,-4	.893,-4	-.247,-3	.117,-3	.202,-4	-.137,-3
38	-.443,-3	-.742,-4	.734,-4	-.137,-3	-.761,-5	.857,-4	-.792,-4	.206,-3	-.243,-5	-.123,-3
39	-.596,-3	.830,-4	.318,-5	-.200,-3	.905,-4	.216,-3	-.307,-4	.237,-3	-.100,-3	.255,-4
40	-.423,-3	.152,-3	-.503,-5	-.145,-3	.151,-3	.123,-3	-.112,-3	.295,-3	-.219,-4	.408,-4
41	-.359,-3	.265,-3	-.891,-5	-.602,-4	.196,-4	.536,-4	-.232,-3	.179,-3	-.829,-4	.217,-4
42	-.065,-4	.327,-3	.109,-3	.177,-3	-.154,-3	.948,-5	-.181,-3	.166,-3	-.209,-3	.238,-4
43	-.186,-4	.244,-3	.698,-4	-.212,-4	-.138,-3	.129,-3	-.140,-3	-.116,-3	-.255,-3	.146,-3
44	-.131,-3	.117,-3	-.227,-3	-.202,-3	.179,-3	.148,-3	-.764,-4	-.297,-4	-.379,-3	.311,-3
45	-.125,-3	.164,-3	-.248,-3	-.275,-3	.281,-3	-.378,-4	.474,-4	.151,-3	-.262,-3	.333,-3
46	-.195,-3	.587,-4	-.227,-3	-.219,-3	-.336,-4	-.504,-4	.648,-4	.969,-4	-.262,-4	.102,-3
47	-.276,-3	.128,-3	-.170,-3	-.272,-3	-.148,-3	.711,-4	.105,-3	-.128,-3	.474,-4	.128,-3
48	-.868,-4	.239,-3	-.900,-4	-.269,-3	.251,-4	.109,-3	.188,-3	-.256,-3	.160,-3	.547,-4
49	-.113,-4	.168,-3	.756,-4	-.250,-3	.536,-4	-.120,-4	.126,-3	-.111,-3	.277,-3	.592,-5
50	-.187,-3	.179,-3	.146,-3	-.734,-4	.688,-4	-.377,-4	.947,-4	-.710,-4	.143,-3	.464,-4
51	-.368,-3	.335,-3	.342,-3	.148,-3	.124,-3	-.219,-4	.115,-3	.648,-4	-.123,-3	-.928,-5
52	-.527,-4	.128,-3	.215,-3	.403,-3	.169,-3	-.844,-4	.555,-4	.243,-3	-.164,-3	.808,-4
53	.126,-3	-.105,-3	.168,-3	.167,-3	.905,-4	.624,-4	.240,-4	.146,-3	-.344,-4	.189,-3
54	-.879,-5	-.149,-3	.290,-3	-.124,-3	.171,-5	-.175,-4	.176,-3	.200,-3	.468,-4	.223,-3
55	-.513,-4	-.813,-4	-.403,-5	-.126,-3	.223,-3	-.593,-4	.132,-3	.349,-3	.292,-4	.677,-4
56	-.129,-4	-.108,-3	-.106,-3	-.115,-3	.171,-3	.385,-4	.604,-4	.778,-4	.123,-3	.632,-4
57	-.807,-5	-.149,-3	.560,-4	-.201,-3	.997,-4	-.130,-3	-.476,-4	-.318,-3	.375,-4	.253,-3
58	-.593,-4	-.431,-5	.126,-3	-.103,-3	.129,-3	-.212,-3	-.398,-4	-.215,-3	-.175,-3	.328,-3
59	-.101,-3	.794,-4	.206,-5	-.407,-4	-.228,-4	-.305,-3	.390,-4	.677,-4	.456,-5	.226,-3
60	.000	.000	.000	.000	.000	.000	.000	.000	.000	.000

Run No. 7 ; v component

Separation Distance (m.)

N	6	12	18	24	36	42	48	72	84	90
00	.000	.000	.000	.000	.000	.000	.000	.000	.000	.000
01	.653,-2	.248,-1	.301,-1	.352,-1	.570,-1	.621,-1	.742,-1	.967,-1	.113	.110
02	.413,-2	.130,-1	.166,-1	.200,-1	.284,-1	.301,-1	.278,-1	.349,-1	.401,-1	.333,-1
03	.157,-2	.555,-2	.500,-2	.123,-1	.122,-1	.824,-2	.159,-1	.109,-1	.919,-2	.383,-2
04	.287,-2	.396,-2	.455,-2	.139,-1	.757,-2	.286,-2	.149,-1	-.270,-2	-.235,-2	-.480,-2
05	.320,-2	.636,-2	.778,-2	.985,-2	.440,-2	.224,-2	.611,-2	-.755,-2	-.330,-2	-.136,-2
06	.208,-2	.576,-2	.633,-2	.543,-2	.974,-3	.213,-3	-.423,-2	-.718,-2	-.230,-2	.644,-3
07	.310,-2	.476,-2	.616,-2	.506,-2	.108,-2	-.625,-4	-.239,-2	-.189,-2	.177,-2	.412,-2
08	.205,-2	.304,-2	.316,-2	.265,-2	-.726,-3	-.155,-2	-.319,-2	-.141,-2	-.163,-3	-.309,-3
09	.108,-2	.294,-2	.191,-2	.243,-2	.552,-3	.293,-3	-.110,-2	.109,-2	-.346,-3	-.984,-3
10	.136,-2	.345,-2	.212,-2	.148,-2	-.106,-2	-.150,-2	-.629,-3	.409,-3	-.406,-2	-.441,-2
11	.247,-2	.379,-2	.958,-2	.417,-3	-.150,-2	-.147,-2	.115,-2	.872,-3	-.169,-2	-.144,-2
12	.282,-2	.374,-2	.193,-2	-.360,-3	-.254,-2	-.140,-2	.469,-3	-.254,-2	-.124,-2	-.540,-3
13	.141,-2	.282,-2	.816,-3	-.670,-3	-.97[illegible],-3	.529,-3	.151,-2	-.147,-2	.158,-2	.139,-2
14	.206,-3	.111,-2	.229,-3	-.810,-3	.288,-4	.798,-3	.381,-3	-.132,-2	.265,-3	-.372,-4
15	.482,-3	.985,-3	.785,-3	-.114,-2	.10[illegible],-2	.114,-2	.861,-3	.664,-3	.437,-3	.777,-3
16	.126,-2	.132,-2	.576,-3	-.137,-2	.165,-3	.323,-3	-.476,-3	.120,-3	-.125,-2	-.168,-4
17	.151,-2	.152,-2	.957,-3	-.133,-3	.360,-3	.173,-4	.783,-4	.291,-3	-.193,-3	.833,-3
18	.128,-2	.524,-3	.265,-3	-.474,-4	-.247,-3	-.444,-3	-.139,-2	-.756,-3	-.680,-3	-.849,-3
19	.935,-3	.441,-3	.617,-4	-.146,-3	.484,-3	.347,-3	-.548,-3	-.589,-3	.767,-3	.795,-3
20	.646,-3	.312,-4	-.475,-3	-.598,-3	.366,-3	-.854,-4	-.531,-3	-.113,-2	-.385,-3	.963,-4
21	.629,-3	.979,-4	-.320,-4	-.134,-3	.229,-3	.237,-3	.344,-3	.101,-3	.199,-3	.586,-3
22	.426,-3	-.122,-4	.240,-3	-.241,-3	-.643,-3	.564,-4	-.120,-3	-.325,-3	-.611,-3	-.347,-3
23	-.132,-3	.178,-3	.442,-3	.121,-3	-.263,-3	.515,-3	.400,-3	.267,-3	.334,-4	.530,-3
24	-.102,-3	-.312,-3	.192,-3	.127,-3	-.453,-3	-.423,-3	-.355,-4	-.365,-3	-.378,-3	-.838,-3
25	.380,-3	-.299,-3	.935,-4	.179,-3	-.424,-4	-.127,-3	.481,-3	.216,-3	.417,-3	.127,-3
26	.460,-3	-.149,-3	.141,-3	.118,-3	-.310,-4	-.374,-3	.230,-4	-.184,-3	-.535,-3	-.743,-3
27	.297,-3	-.713,-4	.862,-4	.223,-3	.313,-3	-.210,-3	.277,-3	.299,-3	-.843,-4	.136,-4
28	.300,-3	-.101,-3	-.142,-3	-.816,-4	-.174,-4	-.739,-3	-.444,-3	-.200,-3	-.415,-3	-.326,-3
29	.219,-3	.496,-4	.143,-4	.172,-3	.102,-3	-.653,-3	-.126,-3	.396,-4	.287,-3	.496,-3
30	.126,-3	-.176,-3	-.130,-4	.850,-4	-.281,-3	-.456,-3	-.354,-3	-.174,-3	-.347,-3	.790,-5
31	.313,-4	-.283,-3	.734,-4	.214,-3	-.155,-3	.291,-4	.173,-3	.256,-3	-.201,-3	.447,-3
32	.375,-4	-.25[illegible],-3	-.297,-4	-.537,-4	-.527,-3	-.354,-4	-.150,-3	-.276,-3	-.653,-3	-.707,-4
33	-.309,-4	.142,-3	.718,-4	.175,-3	-.206,-3	.193,-3	.294,-3	.132,-3	.489,-4	.325,-3
34	.800,-4	.174,-3	.193,-3	.291,-3	-.344,-3	.168,-3	.362,-4	-.144,-3	-.196,-3	-.490,-4
35	.434,-3	.997,-4	.763,-4	.202,-3	-.244,-3	.310,-3	.241,-3	.164,-3	.275,-3	.368,-3
36	.461,-3	-.132,-3	-.375,-4	-.365,-4	-.394,-3	.393,-4	-.136,-3	-.113,-3	-.149,-3	-.128,-3
37	.406,-3	-.926,-5	.459,-4	.131,-4	-.190,-4	.191,-3	.112,-3	.138,-3	.138,-4	.125,-3
38	.828,-4	.424,-4	-.175,-3	-.121,-3	-.177,-3	.412,-5	-.180,-3	-.215,-3	-.365,-3	-.143,-3
39	.884,-5	.110,-3	-.113,-3	-.720,-4	-.143,-4	-.763,-3	.158,-6	.123,-3	-.614,-4	.671,-4
40	.192,-3	-.115,-3	-.153,-4	-.564,-4	.406,-5	-.305,-4	-.276,-3	-.775,-4	-.314,-3	-.252,-3
41	.148,-3	-.192,-3	.246,-3	.156,-3	.104,-3	.177,-3	-.158,-3	.140,-4	-.141,-3	.243,-3
42	.754,-4	-.149,-3	.141,-3	.248,-4	-.521,-4	.350,-4	-.353,-3	-.107,-3	-.507,-3	.116,-3
43	-.823,-4	-.327,-4	.137,-3	-.238,-3	.684,-4	.192,-3	-.135,-3	.265,-3	-.103,-3	.137,-3
44	-.142,-3	-.295,-4	.135,-3	-.283,-3	.452,-4	-.945,-5	-.154,-3	.289,-4	.123,-3	-.435,-3
45	.905,-4	-.126,-3	.436,-4	.152,-3	.278,-3	-.721,-4	.108,-3	.189,-3	.428,-3	-.158,-4
46	.219,-3	-.362,-3	-.309,-3	-.539,-4	.179,-3	-.170,-3	-.109,-3	.233,-4	-.166,-3	-.644,-4
47	.119,-3	-.139,-3	-.466,-3	-.141,-3	.679,-4	-.599,-4	.223,-4	.147,-3	-.149,-3	.106,-3
48	-.253,-4	-.333,-4	-.274,-3	-.137,-3	-.110,-3	-.234,-4	.782,-4	-.135,-3	-.449,-3	-.147,-3
49	-.164,-3	-.147,-3	.376,-4	-.996,-4	.217,-4	.139,-3	.386,-3	-.196,-3	-.357,-3	-.311,-4
50	-.333,-3	-.177,-3	.916,-4	-.940,-4	.827,-4	-.350,-4	.197,-3	-.123,-3	-.303,-3	-.111,-3
51	-.245,-3	-.833,-4	-.259,-4	-.305,-4	.155,-3	-.126,-3	-.439,-4	.292,-4	.757,-4	.251,-3
52	.217,-3	-.165,-3	.139,-4	-.156,-3	.844,-4	-.398,-4	-.440,-3	-.117,-3	-.104,-4	-.347,-4
53	.345,-3	-.223,-3	.115,-3	-.137,-3	.579,-4	.177,-3	-.106,-3	-.567,-4	.101,-3	-.124,-3
54	.148,-3	-.239,-3	-.333,-4	.314,-4	.264,-4	.150,-3	.181,-3	-.110,-3	.412,-4	-.274,-4
55	-.474,-5	-.139,-3	-.550,-4	.677,-4	.566,-4	-.106,-4	.250,-3	.117,-4	.195,-3	.355,-3
56	.103,-4	-.489,-4	.712,-4	-.133,-3	-.627,-4	-.127,-3	.114,-3	.133,-3	.133,-3	.244,-3
57	.959,-5	-.653,-4	.965,-4	-.122,-3	-.980,-5	-.101,-3	.162,-3	.106,-3	.352,-4	-.126,-3
58	-.103,-3	-.168,-3	-.833,-4	.205,-4	-.137,-3	-.128,-3	.215,-5	.496,-4	-.252,-3	-.234,-3
59	-.133,-3	-.322,-3	-.164,-3	.275,-4	-.223,-3	-.927,-4	.599,-5	.671,-4	-.160,-3	.455,-4
60	.000	.000	.000	.000	.000	.000	.000	.000	.000	.000

Run No. 7 ; w component

	Separation Distance (m.)									
N	6	12	18	24	36	42	48	72	84	90
00	.000	.000	.000	.000	.000	.000	.000	.000	.000	.000
01	-.507,-2	-.101,-2	-.184,-3	-.184,-2	.203,-2	.310,-2	-.278,-2	.102,-2	.236,-2	-.501,-3
02	-.264,-2	.302,-2	-.171,-2	.209,-4	.407,-2	.312,-2	.131,-2	.651,-2	.714,-2	.914,-3
03	-.595,-3	-.105,-2	-.261,-2	.705,-2	.700,-2	.258,-2	.292,-2	.841,-2	.147,-1	.265,-2
04	-.599,-2	-.277,-2	.119,-2	.991,-2	.899,-2	.140,-3	.375,-2	.587,-2	.418,-2	-.872,-2
05	-.273,-2	.703,-3	.400,-2	.460,-2	.172,-2	-.336,-2	.100,-2	.363,-2	-.482,-2	-.102,-2
06	.570,-2	.414,-2	.767,-2	.126,-2	-.473,-2	-.659,-2	-.562,-2	.264,-2	-.301,-2	.100,-3
07	.105,-1	.541,-2	.845,-2	.498,-2	-.727,-3	-.700,-2	-.129,-3	.150,-2	-.268,-2	.690,-3
08	.637,-2	.790,-3	.148,-2	.475,-2	-.871,-3	-.542,-2	.566,-2	.489,-3	-.034,-3	.276,-2
09	.805,-3	-.615,-2	-.819,-3	.153,-2	-.736,-2	-.508,-2	.140,-2	-.950,-4	.381,-2	-.948,-3
10	.795,-3	-.610,-2	.189,-2	-.164,-2	-.524,-2	-.719,-3	-.162,-2	-.595,-3	.325,-2	-.229,-2
11	.175,-2	.103,-2	.595,-2	-.285,-2	-.223,-2	.419,-2	-.188,-3	-.337,-3	.672,-3	-.433,-5
12	-.224,-2	.254,-2	-.102,-3	-.258,-2	-.817,-3	.195,-2	.389,-3	.242,-2	.199,-2	.446,-2
13	-.164,-3	.224,-2	-.574,-2	-.188,-2	.829,-3	.295,-2	.375,-2	-.643,-3	.245,-2	.339,-2
14	.270,-2	.312,-2	-.346,-2	-.237,-2	-.159,-2	-.982,-3	.258,-2	-.319,-3	.201,-2	-.108,-2
15	.123,-2	.534,-3	-.181,-2	-.186,-2	-.199,-2	-.243,-2	-.838,-3	.320,-2	-.116,-2	-.199,-2
16	.222,-2	.144,-2	-.356,-3	-.287,-2	-.819,-3	.483,-3	-.123,-2	.400,-3	-.350,-2	-.154,-2
17	.247,-2	.232,-2	.205,-2	-.288,-2	.884,-3	.337,-2	-.212,-2	-.380,-2	-.303,-2	-.158,-2
18	.124,-2	-.925,-3	.335,-2	-.131,-2	.897,-3	.187,-2	-.250,-2	-.239,-2	-.272,-2	.151,-3
19	.421,-3	-.449,-2	.236,-2	.148,-2	-.796,-3	.814,-3	-.249,-2	.819,-3	-.350,-2	.739,-3
20	-.817,-3	.218,-4	.804,-3	-.459,-3	.428,-4	-.831,-3	-.126,-2	-.149,-2	-.279,-2	.328,-3
21	-.775,-3	.222,-2	.451,-3	-.354,-2	-.487,-3	.363,-3	-.132,-2	-.841,-3	.845,-3	.172,-2
22	.990,-3	.990,-3	-.450,-3	-.362,-2	-.851,-3	-.286,-2	-.119,-2	.405,-3	-.830,-4	.611,-3
23	.250,-2	.929,-4	-.271,-2	-.360,-2	.177,-2	-.462,-3	.792,-4	-.187,-2	-.139,-2	.426,-3
24	.421,-2	.557,-3	-.550,-2	-.140,-2	.174,-2	-.330,-2	.293,-3	-.428,-3	.112,-2	-.158,-2
25	.513,-2	-.612,-3	-.937,-2	.763,-3	.426,-3	-.250,-2	.684,-3	.171,-3	.273,-2	-.361,-2
26	.519,-2	-.109,-2	-.475,-2	.996,-3	.205,-2	-.287,-3	.113,-2	.119,-2	.241,-2	-.366,-2
27	.593,-2	-.985,-3	-.202,-3	-.678,-3	.349,-2	.110,-2	.314,-2	.197,-2	.324,-2	-.724,-3
28	.444,-2	.325,-3	.382,-2	-.731,-4	.153,-2	.706,-3	.223,-2	.108,-2	.197,-2	.170,-2
29	.295,-2	.955,-3	.236,-2	.134,-2	-.120,-3	-.482,-3	.391,-3	-.239,-2	-.175,-2	.692,-3
30	.386,-2	-.442,-3	-.324,-3	.158,-2	.130,-2	-.247,-2	.159,-2	-.120,-2	-.400,-2	-.730,-3
31	-.258,-3	.695,-3	-.205,-2	-.248,-3	.312,-2	-.430,-3	.785,-3	.461,-3	-.544,-2	-.525,-3
32	-.137,-2	.238,-2	-.124,-2	-.264,-2	.204,-2	.107,-2	-.992,-3	.489,-3	-.572,-2	.124,-2
33	.169,-2	.174,-2	-.249,-2	-.294,-2	.599,-3	.666,-3	.854,-4	.643,-3	-.173,-2	.357,-2
34	.654,-3	.356,-3	-.220,-2	.115,-2	-.281,-2	.280,-3	.125,-3	-.343,-4	.159,-2	.335,-2
35	-.166,-3	.305,-3	-.203,-3	.297,-2	-.248,-2	-.220,-2	.526,-4	.160,-2	.663,-3	.574,-3
36	-.578,-4	.300,-4	.124,-2	.139,-2	-.134,-2	-.448,-2	-.132,-2	.239,-2	-.124,-3	-.127,-2
37	.341,-3	-.282,-2	.588,-3	.180,-2	-.315,-2	-.213,-2	-.206,-2	-.411,-3	.823,-3	.239,-2
38	-.552,-3	-.477,-2	-.130,-2	.175,-2	-.361,-2	.156,-2	-.150,-2	-.145,-2	-.213,-4	.549,-3
39	.803,-3	-.348,-2	-.159,-2	.127,-2	-.867,-3	.253,-2	-.155,-2	-.155,-2	-.474,-3	-.406,-2
40	.228,-2	-.179,-3	.381,-4	.533,-3	.962,-3	.155,-3	-.241,-2	.402,-4	.197,-2	-.395,-2
41	-.365,-3	.826,-3	.595,-4	-.522,-3	.213,-3	-.143,-2	-.534,-3	.169,-2	.317,-2	-.147,-2
42	-.208,-3	.163,-2	-.516,-3	-.101,-2	-.272,-3	-.608,-4	.593,-3	.158,-2	.701,-3	-.108,-2
43	.276,-2	.267,-2	.116,-2	-.545,-3	.308,-3	.169,-2	.236,-3	-.203,-2	-.710,-4	.730,-4
44	.495,-2	-.807,-4	.272,-2	.111,-2	.211,-2	.109,-2	.172,-2	-.202,-2	.554,-3	.200,-3
45	.400,-2	-.692,-3	.163,-2	.420,-3	.276,-2	.992,-3	.208,-2	-.104,-2	.306,-3	-.357,-3
46	.134,-2	.237,-2	-.163,-2	-.223,-2	.135,-2	-.178,-2	-.425,-3	-.125,-2	-.556,-3	-.475,-3
47	-.911,-4	.326,-2	-.193,-2	-.208,-2	.200,-2	-.481,-2	-.114,-2	-.377,-4	-.105,-2	-.134,-2
48	-.390,-3	.120,-2	-.971,-3	.138,-3	.398,-2	-.359,-2	.160,-2	.775,-3	.808,-3	-.288,-2
49	.533,-3	.828,-3	.370,-3	-.106,-3	.190,-2	.153,-2	.269,-2	-.225,-3	.137,-2	-.132,-2
50	.244,-2	.864,-3	.183,-2	-.371,-5	-.210,-3	.150,-2	.783,-3	.573,-3	.380,-3	-.159,-2
51	.227,-2	.169,-3	.104,-2	.181,-2	-.439,-3	.101,-2	.892,-3	.514,-3	.146,-3	.899,-3
52	-.363,-5	-.132,-2	.285,-3	-.239,-3	-.211,-4	-.130,-3	.242,-3	.511,-4	.105,-2	.350,-2
53	-.236,-2	-.299,-2	-.217,-3	-.300,-2	.756,-3	-.246,-2	-.317,-3	.131,-2	.617,-3	.170,-2
54	-.133,-2	-.617,-3	.110,-2	-.115,-2	.570,-3	-.153,-2	.173,-2	.341,-2	-.206,-3	.166,-2
55	.297,-2	.865,-3	-.184,-4	-.116,-2	.744,-3	.542,-4	.329,-2	.278,-2	.163,-2	.232,-4
56	.352,-2	.614,-3	-.402,-2	-.408,-4	.149,-2	.136,-2	.266,-2	.525,-3	.273,-2	-.706,-3
57	.185,-2	-.533,-3	-.361,-2	.534,-2	.662,-3	.219,-2	.183,-2	-.108,-2	.208,-2	.226,-2
58	.867,-3	-.274,-2	-.824,-3	.381,-2	.181,-3	.190,-2	.146,-2	-.168,-2	.183,-2	.203,-2
59	.467,-3	-.317,-2	-.189,-2	-.225,-4	-.960,-4	.103,-2	.354,-3	-.258,-2	.484,-3	-.179,-4
60	.000	.000	.000	.000	.000	.000	.000	.000	.000	.000

Run No. 8 ; u component

Separation Distance (m.)

K	6	12	18	24	36	42	48	72	84	90
00	.000	.000	.000	.000	.000	.000	.000	.000	.000	.000
01	.232,-1	-.102,-1	.970,-2	-.282,-1	-.419,-1	-.212,-1	-.581,-2	-.204,-2	-.885,-2	.163,-1
02	.379,-2	-.200,-1	-.116,-1	-.831,-2	-.255,-1	-.148,-1	-.339,-1	-.179,-1	-.312,-1	-.129,-1
03	.333,-3	-.124,-1	-.651,-2	-.139,-1	-.134,-1	-.275,-2	-.154,-1	-.117,-1	-.189,-1	-.541,-2
04	.270,-3	-.643,-2	-.100,-2	-.419,-2	-.441,-2	.226,-2	-.500,-2	-.839,-2	-.171,-3	.396,-2
05	.684,-3	.267,-4	.390,-2	-.360,-2	-.439,-3	.492,-2	.253,-2	-.423,-2	.434,-2	.432,-2
06	.271,-2	.304,-2	.527,-2	-.159,-3	.154,-2	.605,-2	.963,-3	-.430,-3	.370,-2	.194,-2
07	.300,-2	-.13,,-2	.392,-2	-.270,-2	-.146,-2	.165,-2	.114,-2	.260,-2	-.925,-3	.220,-2
08	-.596,-3	-.23,,-2	-.167,-3	-.324,-2	.265,-2	.122,-2	-.931,-3	.635,-3	-.311,-2	.769,-3
09	-.430,-3	.793,-3	.599,-3	-.451,-2	.141,-2	.123,-2	-.163,-2	-.608,-3	-.399,-3	-.347,-3
10	-.306,-2	.677,-3	.621,-3	.144,-3	-.932,-3	.538,-3	-.290,-2	-.852,-3	-.385,-3	-.546,-3
11	-.3[illegible],-2	-.515,-3	.346,-3	.643,-3	-.187,-2	-.249,-3	.714,-4	.239,-2	-.704,-3	.197,-2
12	-.142,-2	-.[illegible],-4	-.377,-3	.139,-2	.191,-2	.400,-3	.329,-4	.153,-2	.119,-2	.931,-3
13	.134,-2	.604,-3	.391,-3	-.336,-3	.142,-2	.150,-3	.171,-2	.997,-3	.195,-2	.178,-2
14	.263,-3	-.142,-2	.[illegible]30,-3	-.421,-3	.215,-3	-.397,-3	.632,-3	-.670,-3	-.768,-4	.182,-2
15	-.227,-4	-.244,-2	.112,-2	-.136,-2	-.620,-3	-.225,-3	.148,-2	-.177,-2	-.181,-2	.102,-2
16	-.572,-3	-.125,-2	.169,-2	-.434,-3	-.642,-3	.132,-4	-.20[illegible],-3	-.193,-2	-.156,-2	-.145,-2
17	-.241,-3	.911,-4	.121,-2	-.[illegible]03,-3	-.127,-2	-.103,-2	-.476,-3	-.863,-3	.326,-3	-.110,-2
18	-.123,-2	.323,-3	-.373,-3	.516,-3	.327,-3	-.146,-2	-.154,-2	-.136,-2	.939,-3	-.167,-2
19	-.442,-3	.226,-3	.[illegible]03,-3	.574,-3	.233,-3	-.681,-3	-.392,-3	-.501,-3	.453,-3	-.701,-3
20	-.130,-3	-.170,-3	.548,-3	.108,-2	.147,-3	.916,-3	-.536,-3	-.616,-3	-.377,-4	-.909,-3
21	.104,-3	-.286,-3	.998,-3	.108,-3	-.297,-3	.294,-3	-.713,-3	.234,-3	.214,-4	-.397,-3
22	.179,-4	-.352,-3	.451,-4	-.521,-3	.449,-3	-.887,-3	-.199,-2	.228,-3	.747,-3	.122,-3
23	.655,-4	.213,-4	-.451,-3	-.738,-3	.360,-3	-.102,-2	-.969,-3	.331,-3	.510,-3	.737,-3
24	-.452,-3	-.281,-3	-.214,-3	.484,-3	.251,-3	-.721,-3	-.275,-4	.165,-3	.319,-3	-.567,-3
25	-.387,-3	-.243,-3	-.238,-4	-.379,-3	-.755,-3	-.743,-3	.145,-2	.373,-3	.730,-3	-.782,-3
26	-.335,-3	-.360,-3	-.582,-4	-.211,-3	.120,-3	-.311,-3	-.879,-4	-.131,-3	.374,-3	-.528,-3
27	.354,-3	-.641,-3	.522,-3	-.207,-3	.145,-3	-.423,-3	.241,-3	-.274,-3	.257,-4	-.424,-3
28	.259,-3	-.673,-3	.246,-3	.932,-3	.197,-3	-.353,-3	.218,-3	-.472,-3	-.670,-4	-.623,-3
29	-.291,-3	-.613,-3	.696,-4	.175,-3	-.243,-3	.690,-4	-.184,-4	.418,-3	.166,-3	.267,-3
30	-.770,-3	-.565,-3	-.140,-3	-.535,-4	.859,-4	.484,-3	-.727,-3	-.350,-4	.241,-4	-.298,-4
31	-.415,-3	-.439,-3	-.186,-3	-.329,-3	-.275,-3	.335,-3	-.233,-3	.174,-3	.194,-3	-.112,-3
32	-.214,-3	-.316,-3	-.598,-3	-.152,-3	.201,-3	.647,-3	-.798,-3	.337,-3	.726,-3	-.322,-3
33	.337,-4	.512,-3	-.834,-3	-.247,-3	.345,-3	.121,-3	-.284,-3	-.160,-3	.135,-2	.122,-3
34	-.195,-3	.116,-2	-.637,-3	.417,-3	.528,-3	-.226,-3	-.167,-3	-.983,-3	.651,-3	.362,-3
35	-.116,-3	.103,-2	-.944,-4	.160,-3	.384,-3	-.281,-3	.203,-3	-.418,-3	-.228,-3	.167,-3
36	-.349,-3	.370,-3	.699,-4	.183,-3	.912,-4	.179,-3	.227,-3	-.577,-3	-.734,-3	-.189,-3
37	-.242,-3	-.214,-3	.261,-3	-.223,-3	-.317,-3	-.163,-4	.313,-3	-.836,-4	-.417,-3	.220,-3
38	-.851,-4	-.718,-4	.254,-3	.165,-3	.396,-4	-.586,-4	-.282,-3	-.285,-3	-.258,-3	.185,-3
39	.312,-4	.152,-3	.329,-3	-.894,-4	-.371,-3	-.207,-3	-.404,-3	-.438,-3	-.143,-3	.371,-3
40	-.116,-3	.142,-3	-.127,-3	.902,-4	-.183,-3	-.211,-3	-.623,-3	-.326,-3	-.251,-3	.328,-3
41	-.333,-3	-.472,-4	-.239,-3	-.409,-3	-.167,-3	-.957,-4	.157,-3	-.144,-3	-.242,-3	.881,-4
42	-.497,-3	-.178,-3	-.424,-3	-.346,-3	.821,-4	-.307,-3	.211,-3	-.230,-3	-.183,-4	.175,-3
43	-.720,-4	-.209,-3	-.367,-3	-.232,-3	-.131,-3	-.431,-3	.412,-4	.963,-3	.776,-4	.781,-3
44	.859,-4	-.289,-4	-.400,-3	.125,-3	-.205,-3	-.267,-3	-.215,-3	.727,-3	-.114,-4	.633,-3
45	-.159,-3	.176,-3	-.110,-3	-.556,-4	-.560,-3	-.312,-3	-.922,-5	-.246,-4	-.104,-3	.295,-3
46	-.209,-3	-.101,-3	-.167,-3	.261,-4	-.439,-3	-.181,-3	-.187,-3	-.156,-3	-.178,-3	-.106,-4
47	-.274,-4	-.724,-4	-.201,-3	.200,-3	-.264,-3	-.118,-4	.367,-4	.113,-3	-.290,-3	.180,-3
48	-.340,-3	.920,-4	-.307,-3	.235,-3	.264,-4	-.354,-4	-.440,-3	.195,-4	-.525,-3	.361,-3
49	-.372,-3	-.882,-4	-.224,-3	-.205,-3	-.102,-3	.161,-4	-.378,-3	-.182,-3	-.400,-3	.183,-3
50	-.160,-3	-.103,-3	-.141,-3	.435,-4	.218,-4	.791,-4	-.884,-4	-.319,-3	-.109,-3	-.150,-3
51	.108,-3	.375,-4	-.941,-4	-.509,-4	.133,-4	-.200,-3	-.955,-4	-.154,-3	.113,-3	.940,-5
52	-.379,-4	-.139,-3	-.820,-4	-.559,-4	-.137,-3	-.120,-3	-.199,-3	-.177,-3	-.202,-3	.121,-4
53	-.208,-3	.469,-4	-.308,-4	-.350,-3	-.280,-3	-.257,-3	-.103,-3	-.284,-3	-.334,-3	-.133,-3
54	-.165,-3	.289,-3	.140,-4	-.319,-3	-.689,-4	-.246,-3	-.304,-3	-.314,-3	-.331,-3	-.137,-4
55	.695,-5	.305,-3	.219,-3	.440,-4	-.216,-3	-.529,-4	-.261,-3	-.348,-3	-.337,-3	.571,-4
56	.552,-4	.282,-3	.192,-3	.145,-3	-.314,-3	-.332,-4	-.214,-3	-.171,-3	-.280,-3	.163,-4
57	.148,-3	.151,-3	.559,-4	.429,-5	-.129,-3	-.926,-4	-.368,-4	.766,-4	.222,-4	-.107,-4
58	-.188,-3	.136,-3	.147,-4	.127,-3	-.132,-3	-.[illegible]54,-4	-.126,-3	-.166,-4	.421,-3	.921,-4
59	-.167,-3	.213,-4	.600,-4	.109,-3	-.141,-3	.772,-4	-.157,-3	-.182,-3	.546,-3	.502,-4
60	.000	.000	.000	.000	.000	.000	.000	.000	.000	.000

Run No. 8 ; v component

	Separation Distance (m.)									
N	6	12	18	24	36	42	48	72	84	90
00	.000	.000	.000	.000	.000	.000	.000	.000	.000	.000
01	.269,-2	-.323,-2	-.324,-2	.181,-1	.129,-1	.109,-1	-.107,-1	.334,-2	-.373,-2	.355,-3
02	.188,-2	-.350,-2	-.558,-2	.120,-1	.134,-1	.769,-2	-.123,-1	-.515,-2	-.727,-2	-.273,-2
03	-.657,-3	-.810,-3	-.119,-2	.351,-2	.693,-2	.572,-2	-.195,-2	.137,-2	-.164,-2	-.221,-2
04	-.382,-2	.483,-3	-.181,-2	-.622,-3	-.137,-2	.211,-3	-.205,-2	.227,-2	-.117,-2	-.191,-2
05	-.414,-2	-.254,-2	-.538,-2	.210,-2	-.132,-2	-.224,-2	.151,-2	.447,-3	-.834,-3	-.920,-3
06	-.175,-2	-.755,-3	-.285,-2	.329,-2	.982,-3	-.195,-2	.178,-2	-.568,-3	-.549,-3	-.140,-3
07	-.138,-2	.127,-3	-.184,-2	.109,-2	.114,-2	.569,-4	.188,-2	-.891,-3	-.527,-4	.728,-3
08	-.178,-2	-.618,-3	-.151,-2	.336,-3	-.394,-3	.588,-3	-.147,-2	-.410,-3	-.564,-3	-.921,-3
09	-.126,-2	-.141,-2	-.767,-3	.481,-5	-.533,-3	.483,-3	-.972,-3	.932,-3	.186,-3	.252,-3
10	.128,-3	-.162,-2	-.547,-3	-.581,-3	.462,-5	.637,-3	-.324,-3	-.137,-3	-.801,-3	.473,-3
11	.751,-3	-.115,-2	-.683,-3	.527,-4	.306,-3	.516,-3	-.405,-3	.375,-3	-.676,-3	.226,-3
12	.525,-3	-.365,-4	-.160,-3	.761,-3	.178,-3	-.416,-3	-.118,-2	.670,-3	-.108,-2	-.627,-3
13	.373,-3	.326,-4	.475,-5	.904,-3	-.230,-3	-.545,-3	-.598,-4	.701,-3	-.259,-3	.109,-3
14	.504,-3	-.641,-4	-.204,-3	.274,-3	-.755,-4	-.291,-3	-.236,-3	.119,-3	.118,-4	.147,-3
15	.723,-3	-.171,-3	.821,-4	-.371,-3	.211,-3	-.204,-3	.151,-4	.296,-3	.117,-3	.237,-3
16	.568,-3	-.862,-4	.170,-5	-.331,-3	.440,-3	-.177,-4	-.472,-3	-.334,-3	-.479,-4	-.408,-3
17	.296,-3	-.404,-3	-.379,-4	-.283,-3	.464,-3	.141,-3	.165,-3	-.160,-3	.629,-4	-.229,-3
18	-.146,-4	-.336,-3	-.128,-3	.809,-4	.243,-3	-.143,-3	.164,-4	-.204,-3	-.519,-4	-.280,-3
19	-.317,-3	-.421,-4	-.323,-3	.394,-3	-.204,-4	.223,-3	.198,-3	.912,-4	.401,-3	-.151,-3
20	.173,-3	.147,-3	.306,-3	.567,-4	.380,-4	.883,-3	.915,-5	.425,-3	.328,-3	-.497,-3
21	.795,-3	-.281,-3	.548,-3	-.890,-4	.111,-3	.814,-3	.264,-3	.494,-3	.113,-3	-.513,-4
22	.570,-3	-.564,-3	.402,-3	.111,-4	.446,-5	.339,-3	.157,-3	.285,-4	.106,-3	.488,-4
23	.166,-3	-.566,-3	.298,-3	-.105,-3	-.645,-4	.306,-3	.398,-3	.160,-3	.356,-5	.241,-3
24	-.234,-3	-.407,-3	-.145,-3	.130,-3	-.129,-3	.201,-3	.216,-3	.172,-3	-.542,-3	-.588,-4
25	.227,-4	-.252,-3	-.335,-3	.209,-3	.545,-4	-.284,-3	.441,-3	.399,-3	-.638,-3	-.497,-3
26	.751,-3	.236,-3	-.586,-3	-.303,-5	.305,-3	-.692,-3	-.511,-4	.310,-3	-.855,-3	-.612,-3
27	.397,-3	.286,-3	-.525,-3	-.267,-4	.231,-3	-.384,-3	.629,-4	.260,-3	-.521,-3	-.511,-4
28	-.282,-4	.339,-3	-.163,-3	.219,-3	-.789,-4	-.184,-3	.110,-3	.128,-3	-.169,-3	-.193,-3
29	-.483,-4	.147,-3	-.107,-3	.160,-3	-.102,-3	.992,-4	.137,-3	.275,-3	.398,-3	.179,-3
30	-.136,-3	-.105,-3	-.212,-3	.247,-4	.115,-4	.547,-3	-.782,-4	.132,-3	.542,-3	.678,-5
31	-.212,-3	-.271,-3	-.254,-3	.200,-3	-.106,-3	.507,-3	.149,-3	.369,-3	.233,-3	-.132,-3
32	.836,-4	-.158,-3	-.112,-3	.200,-3	-.134,-3	.105,-3	.209,-4	.367,-3	-.130,-3	-.692,-4
33	.269,-3	-.196,-3	-.125,-3	.320,-4	.120,-3	.254,-4	.419,-4	.271,-3	-.183,-3	.106,-3
34	.222,-3	-.201,-3	.474,-4	-.100,-3	-.140,-3	-.700,-4	-.295,-3	.481,-5	-.252,-4	-.506,-5
35	.393,-3	-.292,-3	.170,-3	-.955,-4	-.211,-3	-.133,-3	-.708,-4	.136,-3	.231,-3	-.198,-3
36	.202,-3	-.154,-3	.934,-4	-.145,-3	.286,-5	-.295,-5	.215,-4	-.376,-3	.860,-4	-.344,-3
37	-.138,-3	-.861,-4	-.222,-3	-.185,-3	-.102,-3	.602,-6	.364,-3	-.641,-3	-.863,-4	-.363,-3
38	-.336,-3	-.170,-3	-.169,-3	-.798,-5	-.310,-3	-.932,-4	.198,-3	-.405,-3	-.365,-3	-.375,-3
39	-.191,-3	-.133,-3	-.153,-4	-.381,-4	-.264,-3	.508,-4	-.182,-4	-.220,-4	-.167,-3	.906,-4
40	.149,-3	.184,-3	.182,-3	-.189,-3	-.164,-3	.212,-3	-.155,-3	.482,-4	.146,-3	-.563,-4
41	.149,-3	.247,-3	.301,-3	-.263,-3	-.327,-4	.359,-3	-.192,-5	.104,-3	.303,-3	-.650,-4
42	-.102,-3	.278,-3	.232,-3	-.184,-4	.676,-4	.565,-4	-.219,-3	.139,-5	.710,-4	-.180,-3
43	-.354,-3	-.255,-5	.357,-4	.594,-4	-.787,-4	-.793,-4	-.301,-3	-.224,-3	.458,-4	-.255,-3
44	-.332,-3	-.237,-3	-.145,-3	.703,-4	-.294,-3	.807,-4	-.422,-3	-.299,-3	.150,-4	-.137,-3
45	-.187,-3	-.136,-3	.334,-4	.208,-3	-.322,-3	.250,-3	-.174,-3	-.848,-4	.193,-4	.242,-3
46	-.605,-4	-.157,-3	.617,-4	.358,-3	-.373,-4	.114,-3	-.213,-3	.508,-4	.131,-4	-.842,-4
47	.408,-4	-.412,-4	.197,-3	.290,-3	.875,-5	.176,-3	-.221,-3	.256,-3	-.295,-4	-.379,-3
48	.257,-3	.589,-4	.605,-3	.174,-3	-.215,-3	.153,-3	-.391,-4	.886,-4	-.161,-3	-.549,-3
49	.249,-3	-.438,-5	.552,-3	.155,-3	-.231,-3	.581,-4	.196,-3	-.115,-3	-.223,-3	-.237,-3
50	.694,-5	-.166,-3	.376,-3	-.135,-3	-.232,-4	-.147,-3	-.135,-3	-.178,-3	-.149,-3	-.316,-3
51	.665,-4	-.132,-3	.311,-3	-.582,-4	.377,-4	-.764,-4	-.107,-3	-.120,-3	.753,-4	-.405,-3
52	.555,-4	-.948,-4	.128,-3	-.107,-3	-.153,-3	.122,-3	.117,-4	-.311,-4	-.408,-4	-.165,-3
53	-.205,-3	-.782,-4	-.363,-4	-.254,-3	-.178,-3	.164,-3	.106,-3	.112,-3	-.107,-3	.187,-3
54	.413,-4	-.543,-4	-.632,-4	-.237,-3	.155,-3	.332,-4	-.999,-4	.121,-3	-.200,-4	.180,-3
55	.153,-3	-.400,-3	.731,-5	.102,-3	.972,-4	.314,-4	-.958,-5	.306,-3	.398,-4	.329,-3
56	.152,-3	-.367,-3	-.146,-3	.101,-3	.111,-3	.253,-5	-.997,-4	.166,-3	.299,-4	.352,-3
57	.132,-3	-.151,-3	-.224,-3	-.148,-5	.666,-4	-.439,-4	-.146,-3	-.525,-4	.235,-3	.118,-3
58	.866,-5	-.678,-5	-.202,-3	-.738,-4	-.121,-3	-.262,-3	-.356,-4	.140,-3	.299,-3	.105,-3
59	.760,-4	.278,-3	-.197,-3	-.768,-4	-.156,-3	-.341,-3	.411,-4	.187,-3	.273,-3	.208,-3
60	.000	.000	.000	.000	.000	.000	.000	.000	-.000,-5	.000

Run No. 8; w component

N	Separation Distance (m.) 6	12	18	24	36	42	48	72	84	90
00	.000	.000	.000	.000	.000	.000		.000	.000	.000
01	.276,-2	.242,-2	.166,-2	.891,-2	.197,-2	-.908,-2		-.114,-3	-.209,-2	.246,-2
02	.135,-2	.120,-2	.834,-3	.487,-2	-.283,-2	-.892,-2		-.231,-2	-.446,-2	.150,-2
03	-.231,-2	.530,-2	-.108,-2	-.654,-3	-.485,-2	-.215,-2		.942,-3	-.150,-2	-.965,-3
04	-.512,-2	-.313,-2	-.239,-2	.226,-2	.277,-2	.108,-2		.295,-2	.714,-2	-.342,-2
05	-.585,-2	-.284,-2	-.212,-3	.226,-2	.351,-2	.144,-2		.351,-2	.157,-2	-.534,-2
06	-.592,-2	-.241,-3	.287,-2	.801,-3	.183,-2	.314,-2		.357,-2	-.517,-3	-.484,-2
07	-.275,-2	-.370,-3	.919,-3	-.518,-3	.339,-2	.884,-2		.152,-2	-.104,-2	-.590,-2
08	.235,-2	.609,-3	-.296,-2	-.995,-3	.315,-2	.786,-2		-.120,-2	-.421,-2	-.373,-2
09	.545,-3	.238,-3	-.117,-2	-.447,-2	-.128,-3	.474,-3		-.793,-3	-.599,-3	.214,-2
10	-.184,-2	-.497,-3	.358,-2	-.304,-2	-.993,-3	-.236,-2		.960,-3	.316,-2	.607,-2
11	-.490,-3	.595,-3	.528, 2	.152,-2	-.317,-2	.161,-2		-.165,-2	.120,-2	.617,-2
12	-.846,-3	.890,-3	.263,-2	.244,-2	.443,-4	.435,-2		-.243,-2	.139,-2	.358,-2
13	-.285,-2	-.329,-3	-.206,-2	.634,-3	.249,-2	.473,-2		.128,-2	.338,-2	-.381,-3
14	-.576,-2	.237,-3	-.262,-2	.497,-3	.312,-3	.274,-2		.920,-3	.187,-2	-.101,-2
15	-.666,-2	.368,-3	.234,-3	-.446,-3	-.247,-2	.512,-3		-.442,-3	-.292,-3	.375,-3
16	-.446,-2	.904,-3	.141,-2	-.150,-2	-.196,-2	.112,-2		.914,-3	.667,-3	-.188,-2
17	-.621,-3	.350,-2	-.879,-3	-.211,-2	.124,-2	.659,-3		.403,-2	-.859,-3	-.420,-2
18	.123,-2	.390,-2	-.101,-2	-.206,-2	.266,-2	.893,-3		.696,-3	-.122,-2	-.423,-3
19	-.109,-2	.332,-2	.661,-3	.562,-4	.360,-4	-.394,-3		-.166,-2	-.254,-2	.359,-2
20	-.143,-2	.256,-2	.996,-3	.109,-3	-.219,-2	-.932,-3		-.648,-3	-.216,-2	.245,-2
21	-.521,-4	.154,-2	.182,-2	.692,-3	-.745,-3	-.136,-2		.189,-2	-.454,-2	-.774,-3
22	.104,-2	.132,-2	-.137,-2	-.861,-3	.177,-2	-.288,-2		.204,-2	-.443,-2	.338,-3
23	.623,-3	.173,-2	-.603,-2	-.495,-2	.122,-2	-.134,-2		.573,-3	-.106,-2	.354,-2
24	-.799,-4	.363,-2	-.267,-2	-.208,-2	-.668,-3	.347,-2		.620,-3	-.122,-2	.294,-2
25	.150,-2	.416,-2	.635,-3	.158,-2	-.316,-3	.449,-2		.562,-3	-.256,-2	.125,-2
26	.249,-2	.127,-2	.192,-2	.307,-2	.791,-3	.240,-2		-.296,-4	-.209,-3	-.844,-3
27	.965,-3	.103,-2	.235,-2	.209,-2	-.265,-2	.700,-3		.164,-2	.144,-2	-.605,-4
28	-.115,-2	.846,-3	.900,-3	.279,-2	-.454,-2	.242,-3		.249,-2	.333,-2	.482,-2
29	-.454,-3	-.159,-2	-.243,-2	.432,-2	-.328,-2	-.281,-2		-.630,-3	.267,-2	.373,-2
30	-.361,-3	-.287,-2	-.211,-2	.212,-2	.646,-6	-.355,-2		.188,-4	.589,-3	-.630,-3
31	.741,-3	.107,-3	-.451,-2	.134,-2	-.659,-4	-.316,-2		-.562,-3	.771,-4	-.766,-3
32	.159,-2	.172,-2	-.313,-2	.285,-2	-.109,-2	-.148,-2		-.131,-2	.695,-4	.870,-3
33	.212,-2	-.136,-2	-.425,-3	.116,-2	.107,-2	.142,-2		.820,-4	-.333,-3	.386,-2
34	.339,-3	-.464,-2	-.182,-2	-.472,-3	.154,-2	.438,-2		-.838,-4	.392,-3	.590,-2
35	-.850,-3	-.242,-2	-.129,-3	.767,-3	-.956,-3	.230,-2		-.149,-2	.189,-2	.202,-2
36	.810,-3	-.351,-3	.130,-2	-.402,-3	.372,-3	-.245,-2		-.298,-2	.105,-2	-.218,-2
37	.138,-2	-.147,-3	.337,-3	.121,-3	.269,-3	-.158,-2		-.356,-2	-.901,-3	-.128,-2
38	.485,-2	-.128,-3	-.519,-3	.174,-2	-.803,-3	.181,-2		-.224,-2	-.251,-2	-.215,-3
39	.436,-2	.225,-2	.380,-3	.498,-3	-.307,-2	.705,-3		.239,-2	-.539,-2	.402,-3
40	.218,-2	.397,-2	.201,-2	-.175,-2	-.229,-2	-.672,-3		.434,-2	-.513,-2	.208,-2
41	.102,-2	.301,-3	.297,-2	-.186,-5	.207,-2	.301,-2		.323,-2	-.428,-2	.201,-2
42	.104,-2	-.194,-2	.108,-2	.232,-2	.243,-2	.256,-2		-.509,-3	-.213,-2	-.118,-2
43	-.517,-3	-.201,-2	.107,-2	.214,-2	-.117,-2	-.111,-2		-.686,-3	.156,-3	-.182,-2
44	.120,-3	-.386,-2	.126,-2	.195,-3	-.459,-2	-.865,-3		-.105,-2	.134,-2	-.128,-2
45	.838,-3	-.290,-2	.130,-2	-.578,-4	-.453,-2	.139,-2		-.901,-3	.104,-2	.203,-2
46	.233,-2	-.766,-3	-.124,-2	-.941,-3	-.323,-3	.246,-2		.256,-3	-.953,-3	.135,-2
47	.331,-2	.474,-3	-.230,-2	-.232,-2	.544,-2	.331,-2		.154,-2	.142,-4	-.142,-2
48	.250,-2	.799,-4	-.171,-2	-.195,-2	.551,-2	.232,-2		.166,-2	-.149,-2	-.135,-2
49	.146,-2	-.200,-3	-.132,-2	-.316,-3	.565,-3	-.714,-4		-.542,-4	-.129,-2	-.476,-4
50	-.137,-2	.215,-2	-.680,-3	.473,-3	-.618,-3	.163,-2		-.157,-2	.213,-3	-.189,-2
51	-.273,-2	.149,-2	.103,-3	.211,-4	.139,-2	.252,-2		.129,-2	.871,-3	-.412,-2
52	-.112,-2	-.230,-2	.136,-2	.200,-2	.246,-2	-.587,-3		.223,-2	.141,-2	-.271,-2
53	.157,-2	-.227,-2	-.434,-3	.250,-2	.111,-2	.608,-4		-.204,-2	.114,-2	-.139,-2
54	-.204,-3	-.800,-3	-.701,-3	.140,-3	.934,-3	-.420,-3		-.189,-2	-.129,-2	-.138,-2
55	-.291,-2	.130,-2	-.533,-3	-.178,-2	-.645,-3	-.248,-2		-.178,-2	-.157,-2	-.118,-2
56	-.107,-2	.246,-2	-.674,-3	-.261,-2	-.715,-3	-.122,-2		-.311,-2	-.170,-2	-.730,-3
57	-.142,-2	.422,-2	-.142,-2	-.350,-4	-.144,-3	-.123,-2		-.188,-2	-.599,-3	.442,-3
58	-.258,-2	.504,-2	-.128,-2	.520,-3	-.138,-2	-.269,-2		.927,-3	.290,-2	.507,-3
59	-.127,-2	.117,-2	-.461,-3	.595,-3	-.294,-3	-.270,-2		.396,-2	.360,-2	.563,-3
60	.000	.000	.000	.000	.000	.000		.000	.000	.000

Run No. 10; u component

	Separation Distance (m.)									
N	6	12	18	24	36	42	48	72	84	90
00	.000	.000	.000	.000	.000	.000	.000	.000	.000	.000
01	.104	.721,-1	.189	.200,-1	.129	.319	.228	.160	.257	.441
02	.120	.323,-1	.266,-1	.212,-1	.720,-1	.191	.793,-1	.5[illegible],-1	.110	.185
03	.455,-1	.302,-2	.172,-1	.205,-1	.301,-1	.700,-1	.281,-1	.859,-2	.288,-1	.423,-1
04	.299,-1	.197,-2	.956,-2	.178,-1	.260,-1	.305,-1	.245,-1	.721,-2	.996,-2	-.433,-2
05	.401,-1	.152,-1	.228,-1	.180,-1	.282,-1	.144,-1	.161,-1	.104,-1	.353,-2	-.128,-1
06	.250,-1	.111,-1	.102,-1	.147,-1	.987,-2	-.706,-3	.463,-2	.466,-2	-.614,-2	-.120,-1
07	.169,-1	.721,-2	.501,-2	.357,-2	.156,-1	.140,-1	.269,-2	.596,-3	-.135,-2	.196,-2
08	.230,-1	.874,-2	-.122,-2	.250,-2	.205,-1	.997,-2	-.968,-2	-.157,-2	-.341,-3	.513,-3
09	.201,-1	.103,-1	-.328,-2	.440,-2	.132,-1	-.406,-2	.452,-3	.610,-2	.539,-2	.636,-2
10	.160,-1	.590,-2	-.300,-2	.321,-2	.488,-2	-.106,-1	-.425,-2	.393,-2	.261,-2	-.377,-2
11	.868,-2	.248,-2	-.240,-2	.444,-3	.282,-2	-.284,-2	-.392,-2	.346,-2	.536,-2	.407,-2
12	.236,-2	-.103,-3	-.376,-2	.192,-2	.120,-2	-.493,-2	-.269,-2	.777,-3	.358,-3	-.286,-2
13	.343,-2	.257,-3	.595,-3	.301,-2	.100,-2	-.398,-2	.641,-3	.285,-2	.310,-2	.913,-3
14	.136,-2	-.380,-3	.242,-3	.240,-2	-.816,-3	-.150,-2	-.199,-2	.383,-3	-.177,-2	.126,-3
15	.238,-2	.139,-2	-.447,-3	.739,-3	-.125,-4	-.182,-3	.366,-3	.140,-3	-.340,-2	.838,-2
16	.214,-2	.164,-2	-.308,-2	-.547,-3	-.364,-3	-.230,-2	-.250,-2	-.111,-2	-.558,-2	.429,-2
17	.296,-3	.295,-2	-.143,-2	-.633,-3	.310,-3	.588,-3	-.110,-2	-.134,-3	.155,-3	.430,-2
18	.870,-3	.173,-2	-.111,-2	.203,-3	-.144,-2	-.126,-2	-.658,-3	-.498,-3	-.205,-2	-.169,-2
19	.132,-2	.156,-2	.119,-2	.127,-2	-.676,-3	-.103,-2	.107,-2	-.180,-3	-.109,-2	.252,-2
20	.549,-3	.962,-3	.586,-3	.936,-3	-.372,-3	-.127,-2	-.164,-2	-.157,-2	-.185,-2	.130,-2
21	.531,-3	.731,-4	-.602,-3	.150,-3	-.220,-3	.892,-3	-.104,-2	-.233,-3	.701,-3	.382,-2
22	-.123,-2	-.171,-2	-.233,-3	-.130,-3	-.980,-3	.119,-2	-.230,-2	-.633,-3	-.219,-2	-.177,-2
23	-.209,-2	-.145,-2	.546,-3	-.307,-3	-.969,-3	.186,-2	-.113,-2	-.689,-4	-.993,-3	-.686,-3
24	-.552,-3	-.481,-3	-.450,-3	-.846,-3	-.304,-3	-.684,-3	-.130,-2	-.102,-2	-.[illegible]95,-3	-.322,-2
25	-.347,-4	-.258,-3	.122,-2	-.226,-3	-.5[illegible]5,-4	-.106,-3	.941,-3	-.132,-2	.225,-2	.112,-3
26	.717,-4	-.623,-3	-.102,-3	.571,-3	-.403,-3	103,-2	.102,-3	-.119,-2	-.380,-3	-.996,-3
27	-.105,-2	.130,-3	-.307,-4	.773,-3	-.231,-3	.024,-3	.468,-3	.956,-4	-.337,-3	.118,-2
28	-.207,-2	.137,-3	.123,-3	.449,-3	-.333,-3	-.748,-3	-.125,-2	-.148,-2	-.894,-3	-.147,-2
29	-.191,-2	.106,-2	.307,-3	.478,-3	.5[illegible]7,-4	.369,-3	.002,-4	-.534,-3	.800,-3	.142,-2
30	-.147,-2	.970,-3	-.533,-4	.260,-3	-.309,-3	-.591,-3	.423,-3	-.227,-4	-.434,-3	.336,-3
31	-.105,-2	.399,-3	.680,-3	-.325,-3	-.212,-3	.301,-3	.726,-3	.298,-3	.405,-3	.131,-3
32	-.200,-2	.646,-4	-.190,-3	-.375,-3	.110,-3	.632,-3	.706,-4	-.457,-3	-.899,-3	-.192,-2
33	-.151,-2	.487,-3	-.823,-3	-.280,-3	-.122,-3	.121,-2	.143,-2	-.594,-4	-.286,-3	-.141,-3
34	-.119,-2	.131,-3	-.650,-3	-.380,-3	-.954,-3	.137,-3	.455,-3	-.574,-3	-.882,-3	-.146,-2
35	-.522,-3	-.115,-4	-.449,-4	-.212,-3	-.143,-3	.619,-3	.907,-3	.769,-3	.211,-3	-.150,-2
36	-.122,-3	-.540,-3	-.463,-3	-.225,-3	.213,-3	-.474,-3	.780,-4	.426,-3	-.460,-5	-.246,-2
37	.922,-4	-.323,-3	-.457,-3	-.280,-3	.208,-4	-.173,-4	.328,-3	.435,-4	.106,-2	.215,-3
38	.459,-3	-.893,-3	-.575,-3	.114,-3	.353,-4	.631,-3	.225,-3	-.457,-3	.167,-3	-.119,-2
39	.493,-3	-.[illegible]0,-4	-.190,-3	.247,-3	.580,-3	.666,-3	.567,-3	.706,-4	.764,-3	-.442,-3
40	-.556,-3	.339,-3	.406,-4	-.3[illegible],-3	-.719,-4	-.728,-3	-.405,-3	-.402,-3	-.141,-3	-.119,-2
41	-.506,-4	.124,-3	.750,-3	-.757,-3	-.476,-4	-.572,-4	-.193,-3	-.833,-5	.234,-3	.688,-3
42	.791,-3	-.591,-4	.502,-3	-.242,-3	.239,-3	.744,-3	-.111,-2	-.720,-4	-.375,-3	.219,-3
43	.284,-3	-.401,-3	.390,-3	.346,-3	-.753,-4	.243,-3	-.127,-2	.634,-3	.158,-3	.100,-2
44	-.129,-3	-.370,-3	-.332, 3	.873,-3	-.922,-3	-.609,-3	-.696,-3	.626,-4	-.192,-3	.103,-3
45	.221,-3	.549,-4	.117,-3	.804,-3	-.489,-3	-.733,-3	-.622,-4	.184,-3	.406,-3	.537,-3
46	.827,-3	.620,-4	-.243,-3	.149,-3	-.392,-3	-.994,-3	-.455,-3	.659,-4	.500,-4	-.512,-3
47	.121,-2	.371,-4	-.216,-3	-.328,-3	.170,-3	.214,-3	-.264,-3	.450,-3	.758,-3	.112,-5
48	.908,-3	.114,-3	.123,-3	-.716,-4	.880,-4	.500,-3	-.322,-3	.257,-3	.401,-3	-.115,-2
49	.537,-3	.306,-3	.434,-3	.960,-4	-.320,-4	.397,-3	.459,-4	.451,-3	.402,-4	-.453,-3
50	.233,-3	.233,-3	.323,-3	.336,-3	-.273,-4	.107,-3	-.609,-3	-.361,-4	-.674,-3	-.823,-4
51	.503,-3	.368,-4	.594,-3	-.694,-4	.122,-3	.621,-3	-.175,-3	-.374,-3	-.215,-3	.702,-3
52	.492,-3	-.514,-3	.385,-3	-.251,-3	.504,-4	.139,-3	.402,-3	-.792,-3	-.236,-3	-.301,-3
53	.636,-4	-.630,-3	.372,-3	-.557,-5	-.115,-3	.491,-3	.230,-3	-.152,-3	.202,-3	-.341,-3
54	-.161,-3	-.375,-3	.538,-3	-.894,-5	-.971,-4	.645,-3	-.404,-3	.332,-3	.622,-3	-.101,-2
55	-.189,-3	.273,-5	.682,-3	-.313,-4	-.466,-3	.130,-2	-.433,-3	.358,-3	.193,-2	-.851,-3
56	-.131,-3	.123,-3	.241,-3	-.660,-4	-.529,-3	.951,-3	-.625,-3	.188,-3	.617,-3	-.432,-3
57	-.201,-3	.343,-4	.191,-3	-.154,-3	.298,-3	.480,-3	-.231,-3	.189,-3	.350,-3	-.214,-3
58	-.523,-3	-.130,-5	-.932,-4	-.260,-3	.671,-3	.474,-3	-.126,-3	.240,-3	-.294,-3	-.143,-3
59	-.100,-3	-.352,-5	-.362,-3	-.248,-3	.523,-3	.253,-3	.634,-4	.278,-3	-.325,-3	.206,-3
60	.000	.000	.000	.000	.000	.000	.000	.000	.000	.000

Run No. 10; v component

N	Separation Distance (m.) 6	12	18	24	36	42	48	72	84	90
00	.000	.000	.000	.000	.000	.000	.000	.000	.000	.000
01	.335,-1	.198,-1	.445,-1	.209,-1	.601,-1	.109	.520,-1	.334,-1	.513,-1	.148
02	.131,-1	.104,-1	.215,-1	.353,-1	.405,-1	.660,-1	.515,-1	.351,-1	.461,-1	.677,-1
03	.113,-1	.149,-1	.277,-1	.515,-1	.674,-1	.707,-1	.535,-1	.249,-1	.229,-1	.126,-1
04	.119,-1	.110,-1	.170,-1	.367,-1	.498,-1	.506,-1	.381,-1	.162,-1	.175,-1	.187,-1
05	.106,-1	.093,-2	.133,-1	.187,-1	.258,-1	.219,-1	.136,-1	.519,-2	.585,-2	.996,-2
06	.879,-2	.559,-2	.957,-2	.123,-1	.123,-1	.905,-2	.641,-2	-.103,-2	.254,-2	.542,-2
07	.806,-2	.630,-2	.102,-1	.100,-1	.108,-1	.644,-2	-.665,-3	-.385,-2	.301,-2	.443,-2
08	.831,-2	.723,-2	.958,-2	.826,-2	.707,-2	.208,-2	-.698,-3	-.409,-2	-.650,-3	-.572,-3
09	.871,-2	.729,-2	.905,-2	.771,-2	.718,-2	.309,-2	-.279,-2	-.111,-2	.551,-3	-.521,-4
10	.733,-2	.684,-2	.556,-2	.508,-2	.307,-2	.170,-2	-.407,-2	.176,-2	.340,-2	.412,-4
11	.104,-1	.664,-2	.723,-2	.215,-2	.446,-3	.275,-2	-.187,-2	.110,-2	.334,-2	.232,-3
12	.106,-1	.621,-2	.525,-2	.213,-2	.343,-4	-.231,-2	-.150,-3	.181,-2	.202,-2	.910,-4
13	.839,-2	.773,-2	.415,-2	.317,-2	.166,-2	-.246,-2	.312,-3	.224,-2	-.914,-3	-.126,-2
14	.466,-2	.534,-2	.232,-2	.137,-2	.963,-6	-.230,-2	.517,-3	.132,-2	-.197,-2	-.700,-3
15	.436,-2	.299,-2	.162,-2	.502,-3	.105,-2	.126,-2	.132,-3	-.782,-3	.130,-2	.209,-2
16	.390,-2	.123,-2	-.410,-3	-.544,-3	.130,-2	.185,-2	-.777,-4	-.132,-2	.132,-2	.204,-2
17	.203,-2	.988,-3	.566,-3	-.591,-4	.201,-2	.202,-2	-.527,-3	-.113,-3	.272,-3	.124,-2
18	.733,-3	.475,-3	-.458,-3	.284,-3	.129,-3	.675,-3	-.513,-3	.110,-2	.552,-3	-.644,-3
19	.280,-2	.183,-2	-.356,-3	.143,-3	-.736,-4	.161,-2	-.140,-2	.0 8,-3	.136,-9	-.138,-4
20	.424,-2	.153,-2	-.253,-2	.152,-3	.300,-7	-.612,-3	-.400,-3	-.237,-2	-.259,-3	-.336,-3
21	.288,-2	.752,-3	-.121,-2	.303,-3	.578,-3	.188,-3	.118,-3	.365,-4	-.533,-3	-.751,-3
22	.252,-3	-.659,-3	-.591,-3	.519,-3	.719,-3	-.190,-3	-.172,-3	-.184,-3	-.300,-3	-.613,-3
23	.110,-3	-.592,-3	.944,-3	.835,-3	.553,-3	.294,-3	-.104,-2	-.104,-2	-.610,-3	.761,-5
24	.599,-3	-.476,-3	.326,-3	.980,-3	-.263,-3	-.105,-3	-.730,-3	-.003,-3	-.166,-3	-.503,-3
25	.163,-2	-.271,-3	.330,-3	.706,-3	.212,-3	-.569,-4	.161,-3	.258,-3	-.320,-3	-.286,-3
26	.255,-2	-.525,-3	-.4.3,-4	.169,-3	.687,-3	-.133,-2	-.315,-4	.271,-3	.213,-3	-.617,-3
27	.276,-2	-.145,-3	.351,-3	.121,-4	.240,-3	-.340,-4	-.410,-3	-.216,-3	.340,-3	-.213,-3
28	.103,-2	-.616,-3	.495,-3	-.362,-3	-.681,-3	-.272,-3	-.107,-3	-.366,-3	.479,-4	-.297,-3
29	.793,-3	-.306,-3	.453,-3	-.372,-3	-.346,-3	.244,-3	.364,-3	-.128,-3	-.240,-3	-.194,-4
30	.115,-2	-.182,-3	-.815,-4	-.222,-3	-.187,-3	-.208,-3	.504,-3	.209,-3	-.645,-3	.511,-3
31	.101,-2	-.626,-4	.175,-3	.246,-3	.273,-3	.102,-3	.161,-3	.395,-4	.210,-3	.896,-3
32	.638,-3	-.175,-3	.532,-3	.125,-3	-.405,-3	-.500,-3	.356,-3	-.167,-3	.173,-3	.703,-3
33	.110,-2	.226,-3	.494,-3	-.356,-4	-.304,-3	.815,-3	.105,-2	-.434,-3	-.426,-3	.677,-3
34	.113,-2	-.354,-3	-.533,-3	-.675,-3	.149,-3	.343,-3	.866,-3	-.598,-3	-.566,-3	.252,-3
35	.978,-3	-.715,-3	-.585,-4	-.459,-3	.247,-3	.127,-2	.525,-3	-.240,-3	-.101,-3	.605,-3
36	.404,-3	-.370,-3	.220,-3	-.136,-3	-.210,-3	.125,-2	.843,-3	.872,-4	-.247,-3	.193,-3
37	.029,-3	.159,-3	.239,-3	-.905,-4	-.161,-3	-.308,-3	.743,-3	.100,-3	-.342,-4	-.330,-3
38	.214,-3	.223,-4	.272,-3	-.227,-3	-.770,-3	-.160,-2	-.253,-3	-.452,-4	-.724,-3	-.926,-3
39	-.284,-3	.395,-4	.478,-3	-.175,-3	-.357,-3	-.930,-3	-.861,-3	-.971,-4	-.400,-3	-.533,-3
40	-.690,-3	-.298,-3	-.416,-3	-.310,-3	-.337,-4	-.744,-3	-.500,-3	.083,-4	.110,-3	.515,-5
41	-.109,-3	-.439,-3	-.642,-3	-.232,-4	.670,-3	.439,-3	-.447,-3	.203,-3	.011,-3	-.558,-3
42	.326,-3	-.255,-3	-.959,-3	.272,-4	.732,-3	.698,-3	-.150,-3	.239,-3	.226,-3	-.687,-3
43	.648,-3	.2 ,-3	-.201,-3	.674,-3	.609,-3	.328,-3	-.291,-4	.374,-3	.432,-3	.548,-3
44	.313,-3	.112,-3	.162,-4	.171,-4	-.164,-4	.301,-3	-.794,-4	.313,-4	.365,-3	.113,-2
45	.368,-3	.398,-3	-.668,-3	.144,-3	-.624,-4	.281,-4	-.471,-3	-.208,-3	.127,-3	.133,-2
46	.263,-3	.539,-3	-.123,-2	.626,-4	.508,-4	-.400,-3	-.391,-3	-.136,-3	-.188,-4	.454,-3
47	.435,-3	.437,-3	-.337,-3	.330,-3	.563,-3	.418,-5	-.142,-3	.104,-4	.301,-3	-.369,-4
48	.100,-3	-.382,-4	.502,-3	-.229,-3	.327,-3	-.175,-5	.628,-4	.634,-4	.376,-3	-.433,-3
49	-.292,-3	-.403,-3	.491,-3	-.130,-3	.520,-3	.751,-3	.353,-3	.154,-3	.950,-4	-.394,-3
50	.126,-4	-.723,-3	.816,-4	.311,-5	.358,-3	.927,-3	.351,-3	.308,-3	-.296,-3	-.197,-3
51	.193,-3	-.341,-3	.306,-3	-.459,-4	.746,-4	.656,-3	.223,-3	.131,-3	-.581,-4	.184,-3
52	.220,-4	.158,-3	.347,-3	.377,-5	.141,-3	.185,-3	-.177,-4	.135,-3	.197,-3	.111,-3
53	.152,-3	.212,-3	.309,-3	.296,-4	.273,-3	-.105,-3	.135,-4	.241,-3	.371,-3	.936,-4
54	-.109,-3	.698,-4	-.116,-3	-.208,-3	-.132,-3	-.989,-4	.920,-4	.360,-3	.589,-3	-.209,-4
55	.402,-3	.377,-4	-.115,-4	-.749,-4	-.268,-3	-.142,-3	.510,-4	.183,-3	.103,-2	.392,-4
56	.139,-2	-.258,-3	.534,-3	.490,-4	.138,-3	-.642,-3	.262,-3	-.132,-3	.777,-3	.214,-3
57	.122,-2	-.509,-3	.101,-2	-.432,-4	.269,-3	-.876,-3	.192,-3	-.171,-3	.438,-3	.209,-3
58	.118,-2	-.823,-3	.680,-3	-.243,-3	-.890,-4	-.864,-3	.725,-4	.676,-4	.499,-3	.161,-3
59	.148,-2	-.874,-3	.415,-3	-.415,-3	-.411,-3	-.434,-3	-.353,-3	.212,-3	.561,-3	.276,-3
60	.000	.000	.000	.000	.000	.000	.000	.000	.000	.000

Run No. 13 ; u component

Separation Distance (m.)

N	6	12	18	24	36	42	48	72	84	90
00	.000	.000	.000	.000	.000	.000	.000	.000	.000	.000
01	.102,-3	.207,-3	.321,-3	.459,-4	.242,-3	.383,-3	-.122,-3	-.183,-3	.742,-4	.18?,-3
02	.108,-3	.122,-4	.918,-4	.951,-4	-.385,-6	.166,-4	-.114,-3	-.162,-3	-.780,-4	.482,-4
03	.104,-3	.594,-4	.708,-4	-.835,-5	-.547,-4	-.140,-4	-.607,-4	-.107,-3	-.752,-4	.213,-4
04	.935,-4	.110,-3	.760,-4	-.106,-3	-.102,-3	.172,-4	-.234,-4	-.768,-4	-.660,-4	.130,-4
05	.666,-4	.123,-3	.115,-3	-.459,-4	-.724,-4	.288,-4	.224,-4	-.941,-4	-.802,-4	-.219,-5
06	-.623,-5	.420,-4	.561,-4	.291,-4	-.344,-4	-.314,-4	.467,-4	-.131,-5	-.772,-4	-.509,-4
07	-.162,-4	.318,-4	.217,-4	.256,-4	.219,-4	-.166,-4	.659,-5	-.273,-4	-.555,-4	-.388,-4
08	-.102,-4	-.226,-4	-.316,-5	.778,-5	.917,-5	-.106,-4	-.501,-5	.136,-5	.119,-4	-.373,-4
09	.120,-4	-.617,-4	.228,-4	-.220,-4	.280,-4	-.123,-4	-.108,-4	.494,-5	.340,-4	-.846,-5
10	.140,-4	-.515,-4	-.162,-5	-.183,-4	.480,-4	-.357,-4	-.265,-4	-.200,-4	-.189,-4	.548,-5
11	.239,-4	-.113,-4	-.260,-4	.696,-5	.203,-4	-.147,-4	-.417,-4	-.334,-4	-.227,-4	.158,-4
12	.221,-4	.130,-4	-.345,-4	.278,-5	-.702,-5	-.126,-4	-.227,-4	-.276,-4	-.191,-4	.207,-4
13	.170,-4	.136,-4	-.155,-4	.141,-4	.143,-4	.160,-4	-.198,-5	-.327,-4	-.135,-4	.216,-4
14	.177,-4	-.212,-4	-.105,-4	.257,-4	.738,-5	.170,-4	.886,-5	-.881,-5	.228,-5	.134,-4
15	.701,-5	-.279,-4	.338,-4	.983,-5	.319,-5	.230,-5	-.553,-5	.456,-5	.645,-5	-.553,-5
16	.300,-5	-.270,-4	.344,-4	-.693,-5	.101,-4	-.262,-4	-.314,-4	.279,-4	.341,-5	-.145,-4
17	.183,-5	-.188,-4	.194,-4	-.492,-5	.477,-5	-.133,-4	-.428,-4	-.229,-5	-.118,-4	.422,-5
18	.184,-5	-.392,-5	.402,-5	.184,-4	-.174,-4	.219,-5	-.175,-4	-.152,-4	-.263,-4	.549,-5
19	.441,-5	.127,-4	-.111,-6	.118,-4	-.401,-5	.518,-5	.249,-5	-.514,-5	-.231,-4	.142,-4
20	.429,-6	.577,-5	-.622,-5	.223,-5	-.124,-5	-.[illegible]2,-5	-.247,-5	-.840,-5	-.872,-5	.907,-5
21	.237,-5	.138,-4	-.145,-5	-.415,-6	.176,-5	-.407,-5	-.249,-5	-.127,-4	.120,-4	-.171,-5
22	-.185,-5	.397,-5	-.536,-5	-.165,-5	.754,-5	-.140,-4	.396,-5	.425,-5	.178,-4	-.228,-5
23	-.468,-5	-.232,-5	.121,-4	-.463,-5	.802,-5	-.933,-5	.307,-5	.112,-4	-.668,-6	.193,-4
24	-.839,-5	-.119,-4	.180,-4	.445,-5	-.595,-5	-.170,-5	.905,-5	.262,-5	-.205,-4	.128,-4
25	-.922,-5	-.110,-4	.860,-5	.614,-5	-.995,-5	.805,-5	.491,-5	-.326,-5	.102,-4	.217,-5
26	-.378,-5	-.774,-5	-.953,-5	-.455,-7	-.750,-5	.438,-5	.525,-5	.818,-5	.605,-5	-.124,-4
27	.422,-5	.122,-6	-.126,-5	.423,-5	.436,-5	.195,-5	.550,-5	.880,-6	.427,-5	-.437,-5
28	.519,-5	-.243,-6	-.367,-5	.563,-5	-.151,-5	-.526,-5	.525,-5	.616,-5	-.300,-6	-.118,-5
29	.547,-5	.363,-5	-.744,-7	.197,-5	-.401,-5	-.269,-5	.566,-5	.100,-5	.213,-5	.642,-5
30	.611,-5	.417,-6	-.488,-6	.260,-5	-.387,-5	-.493,-5	.253,-5	.796,-5	.165,-5	.605,-5
31	.780,-5	.461,-5	.579,-5	.415,-5	-.471,-7	-.489,-5	-.105,-4	-.952,-6	-.335,-5	.706,-5
32	.322,-5	.508,-5	.432,-5	-.209,-5	-.411,-7	-.340,-5	-.155,-4	-.253,-5	-.138,-4	.574,-5
33	.511,-5	.104,-4	.208,-5	-.587,-5	.421,-5	.269,-5	-.580,-6	-.975,-6	-.173,-4	.584,-5
34	.446,-5	.576,-5	-.161,-5	-.382,-5	-.261,-6	-.187,-6	.900,-5	.782,-5	-.132,-4	.152,-5
35	.532,-5	.433,-5	.508,-5	.973,-6	-.236,-5	-.172,-5	.447,-5	.481,-5	-.942,-5	.432,-5
36	.340,-5	.653,-6	.621,-5	.902,-7	-.454,-5	-.[illegible]03,-5	-.729,-6	.530,-5	-.642,-5	-.109,-5
37	-.719,-10	.239,-6	.765,-5	-.140,-5	.221,-5	.465,-6	.141,-5	-.820,-6	-.105,-5	-.502,-5
38	-.563,-5	.265,-6	.215,-5	.245,-5	.356,-5	-.247,-5	.950,-5	-.110,-5	.295,-5	-.750,-5
39	-.416,-5	.212,-5	.179,-5	.546,-6	.566,-5	-.192,-5	.778,-5	-.809,-6	.345,-5	-.427,-5
40	-.242,-5	-.126,-5	.419,-6	-.216,-5	.460,-5	-.180,-5	.582,-6	.115,-6	-.662,-5	-.340,-5
41	.754,-7	.143,-8	.340,-5	-.289,-5	.324,-5	.282,-5	.328,-5	.881,-6	-.101,-4	-.332,-5
42	-.358,-6	.335,-8	.545,-6	-.196,-5	.310,-6	.270,-5	.134,-4	-.372,-6	-.493,-5	-.468,-5
43	.145,-6	.143,-8	.112,-5	.117,-5	.151,-5	.509,-5	.164,-4	.960,-7	-.227,-5	-.416,-5
44	-.273,-6	-.677,-6	.133,-5	-.859,-6	.260,-5	.249,-5	.789,-5	-.286,-6	.118,-5	-.328,-5
45	-.434,-6	.619,-5	.380,-5	-.294,-5	.207,-5	.116,-6	-.376,-5	-.363,-5	-.471,-6	-.555,-6
46	.151,-5	.669,-5	.382,-6	-.130,-5	-.113,-6	-.165,-5	-.250,-5	-.129,-5	-.815,-5	.174,-5
47	.205,-5	.552,-5	-.744,-10	.119,-5	.156,-5	-.549,-6	.797,-5	.665,-7	-.662,-5	.284,-5
48	-.318,-6	.208,-5	-.959,-6	.125,-5	.192,-5	-.948,-7	.779,-5	-.609,-7	-.253,-5	.824,-5
49	-.154,-5	.377,-5	.136,-6	-.100,-5	.241,-5	.851,-6	.277,-5	-.216,-5	.169,-5	.588,-5
50	-.163,-5	.698,-5	-.866,-6	-.722,-5	-.723,-6	-.673,-6	.124,-5	-.322,-5	.191,-5	-.257,-5
51	-.216,-5	.671,-5	-.107,-5	-.260,-6	.192,-5	.116,-5	.100,-5	-.488,-5	-.135,-5	-.414,-5
52	-.980,-6	.194,-5	-.692,-6	-.980,-6	.953,-6	.112,-5	.591,-5	-.154,-6	-.645,-5	-.335,-5
53	-.326,-6	-.365,-6	.113,-9	-.128,-5	.789,-6	.794,-7	.591,-5	-.148,-7	-.475,-5	.817,-5
54	-.859,-6	-.205,-5	-.666,-6	-.771,-7	.113,-5	-.131,-5	.369,-5	-.400,-6	-.646,-6	.214,-5
55	-.266,-5	-.269,-5	.199,-6	.275,-5	.308,-5	-.302,-5	.323,-5	-.309,-6	.422,-6	.108,-5
56	-.252,-5	-.517,-5	.397,-6	.180,-5	.179,-5	-.365,-5	.181,-5	.327,-5	.286,-5	-.605,-6
57	-.102,-5	-.585,-5	-.125,-7	.644,-6	.335,-5	-.331,-5	.392,-5	.408,-5	-.272,-6	.162,-5
58	-.335,-6	-.244,-5	-.168,-5	.178,-5	.413,-5	-.223,-5	.404,-5	.166,-5	-.394,-5	.132,-5
59	.182,-5	.157,-5	-.201,-5	.823,-7	.239,-5	.287,-6	.121,-6	.453,-6	-.312,-5	.283,-5
60	.000	.000	.000	.000	.000	.000	.000	.000	.000	.000

Run No. 13 ; v component

Separation Distance (m.)

N	6	12	18	24	36	42	48	72	84	90
00	.000	.000	.000	.000	.000	.000	.000	.000	.000	.000
01	-.130,-3	.335,-4	-.692,-4	.262,-4	.406,-4	-.679,-4	.109,-3	.117,-3	.460,-4	-.402,-4
02	.603,-5	-.111,-4	-.107,-4	.480,-4	.121,-4	.144,-4	-.254,-4	.416,-4	-.437,-4	-.441,-4
03	.108,-4	.940,-5	.159,-4	.118,-4	.497,-5	.962,-5	-.649,-5	.188,-4	-.710,-5	-.560,-5
04	.170,-4	.119,-4	.310,-4	-.195,-4	.892,-5	.109,-4	.212,-4	-.112,-4	.145,-7	.159,-4
05	.651,-5	.547,-6	.760,-5	-.148,-4	-.397,-5	.533,-5	.015,-4	-.203,-5	.340,-6	-.177,-6
06	.208,-4	-.664,-5	.114,-5	.355,-5	.853,-6	.439,-5	.108,-4	.386,-5	-.104,-4	-.183,-4
07	.178,-4	.417,-5	-.349,-5	.125,-4	-.172,-6	-.358,-5	.149,-4	-.256,-5	-.621,-6	-.181,-4
08	.171,-4	.390,-5	.387,-5	.120,-4	-.392,-5	.616,-5	.573,-6	-.156,-4	-.462,-5	-.633,-5
09	.798,-5	.420,-5	.850,-5	-.996,-6	.125,-5	.145,-4	-.134,-4	-.261,-5	-.380,-5	.302,-6
10	.177,-4	.126,-5	-.208,-5	-.158,-4	-.125,-5	.105,-4	-.144,-4	.459,-5	-.797,-5	.171,-4
11	.134,-4	.379,-5	-.106,-4	-.789,-5	.423,-6	-.467,-5	-.539,-5	-.100,-5	-.440,-5	.236,-4
12	.187,-4	.851,-5	.122,-5	.555,-7	-.291,-5	-.799,-5	-.423,-5	-.981,-5	-.540,-6	.209,-4
13	.716,-5	.904,-5	.978,-6	-.432,-6	.980,-6	-.104,-4	-.442,-5	-.354,-5	.837,-5	.141,-4
14	.949,-5	.485,-5	-.531,-5	.715,-5	-.457,-5	.628,-5	-.709,-5	-.192,-5	.437,-5	.108,-4
15	.107,-4	.105,-4	-.171,-4	.158,-4	-.855,-5	.849,-5	-.192,-5	.252,-5	.335,-5	.118,-4
16	.132,-4	.865,-5	-.122,-4	.819,-5	-.209,-5	.373,-5	.585,-5	.262,-5	.789,-5	.572,-5
17	.174,-5	.472,-6	-.244,-5	.333,-5	.165,-6	.615,-7	.178,-5	.775,-5	.147,-4	.964,-5
18	-.158,-5	-.698,-5	.301,-6	.602,-6	-.504,-5	.125,-5	.469,-5	.129,-4	-.820,-5	.876,-5
19	-.459,-5	-.190,-5	.125,-5	-.696,-5	.312,-5	-.685,-6	.157,-4	.308,-5	-.220,-4	-.360,-5
20	-.120,-4	.297,-5	.137,-4	-.788,-5	.662,-6	-.715,-6	.133,-4	-.129,-4	-.130,-4	-.183,-4
21	-.167,-4	.517,-5	.131,-4	-.293,-5	-.504,-5	-.285,-5	.611,-5	-.732,-5	.288,-5	-.162,-4
22	-.323,-5	.143,-5	.526,-5	.904,-6	-.113,-5	.532,-5	.297,-5	-.112,-4	.235,-4	-.720,-5
23	.498,-6	.504,-6	-.269,-5	.168,-5	.356,-5	.395,-5	.905,-5	-.661,-5	.302,-4	.549,-5
24	-.841,-6	.809,-6	-.112,-4	.143,-5	-.767,-6	-.252,-5	-.851,-5	-.818,-5	.932,-5	.938,-5
25	-.742,-5	.142,-5	-.144,-4	.566,-6	-.151,-5	-.711,-5	-.199,-4	-.755,-5	-.403,-5	.201,-5
26	-.174,-5	.300,-6	-.502,-5	-.189,-5	-.439,-6	-.128,-5	-.989,-5	-.333,-5	-.309,-5	.885,-5
27	.139,-5	-.411,-5	-.225,-5	-.660,-5	.145,-5	.333,-5	.151,-5	.112,-4	.327,-5	.126,-4
28	.320,-5	-.466,-5	-.248,-5	-.517,-5	-.108,-5	.631,-5	-.288,-5	.267,-5	.499,-5	.171,-4
29	.592,-6	-.168,-5	-.721,-6	.172,-5	-.769,-6	.236,-5	-.768,-5	.585,-6	-.203,-6	.222,-4
30	.217,-5	.158,-6	.503,-5	.561,-5	-.245,-6	.624,-6	-.111,-4	.533,-5	-.638,-5	.201,-4
31	.314,-5	-.143,-5	.140,-5	.452,-5	.960,-7	.288,-6	-.774,-5	.778,-5	.117,-5	.890,-5
32	.249,-5	-.526,-5	.800,-6	-.940,-6	-.915,-6	-.498,-6	-.532,-5	.394,-5	.377,-5	-.149,-5
33	.135,-5	-.348,-5	-.201,-5	-.466,-5	-.759,-6	-.606,-5	-.614,-5	.743,-6	.109,-5	-.566,-5
34	.395,-5	-.568,-5	-.423,-5	-.338,-5	-.458,-6	-.664,-5	.249,-6	.529,-5	.252,-5	-.215,-5
35	-.332,-5	-.178,-5	.202,-5	-.986,-6	.883,-6	-.206,-6	.195,-5	.816,-5	.652,-5	.519,-5
36	-.395,-5	.811,-6	.418,-5	-.105,-5	-.717,-6	.263,-5	-.259,-5	.559,-6	.674,-5	.864,-5
37	-.110,-5	-.130,-5	.238,-5	-.240,-5	.171,-6	-.698,-6	-.353,-5	-.465,-5	.291,-5	.712,-5
38	.607,-5	.286,-6	-.934,-6	.114,-5	.103,-5	-.257,-5	.125,-5	-.517,-5	-.299,-5	.554,-5
39	.785,-5	.374,-5	-.458,-5	.406,-5	.135,-5	-.487,-5	.321,-7	-.269,-5	.265,-5	.109,-5
40	.399,-5	.194,-5	.128,-5	-.643,-6	.165,-5	-.397,-5	-.105,-5	-.165,-5	.491,-6	-.487,-5
41	.840,-6	-.284,-5	.409,-5	-.783,-6	.435,-5	-.420,-6	.189,-7	.124,-5	.116,-4	-.235,-5
42	.120,-5	-.344,-5	.540,-5	.170,-5	.308,-5	.322,-5	.859,-6	.664,-5	.909,-5	-.148,-5
43	.834,-7	-.560,-6	.504,-5	-.744,-6	.873,-6	.212,-5	.353,-6	.389,-5	-.348,-5	-.292,-5
44	-.192,-5	.187,-5	.626,-5	.762,-6	-.151,-5	.648,-6	-.427,-5	.119,-5	-.409,-5	.447,-5
45	-.317,-5	-.844,-6	.382,-5	.308,-5	-.100,-5	.173,-5	-.700,-5	.128,-5	-.856,-6	-.621,-5
46	-.302,-5	-.596,-5	.198,-5	.233,-5	-.210,-6	.238,-5	-.871,-5	-.200,-5	.307,-5	-.117,-4
47	-.252,-5	-.458,-5	.365,-5	.194,-5	-.100,-5	.915,-6	-.663,-5	-.769,-5	.201,-5	-.721,-5
48	-.314,-5	-.328,-5	.586,-5	.131,-5	-.229,-5	.104,-5	-.413,-5	-.980,-5	-.126,-4	-.889,-5
49	-.491,-5	.184,-6	.603,-5	-.750,-6	-.169,-5	.212,-5	-.302,-5	-.701,-5	-.191,-4	-.405,-5
50	-.158,-5	.202,-5	.449,-5	-.175,-5	-.213,-6	.140,-5	-.398,-5	-.217,-5	-.141,-4	.104,-5
51	-.303,-5	-.530,-6	-.642,-5	.143,-5	.285,-6	-.173,-5	-.389,-5	.384,-7	-.973,-6	-.853,-5
52	-.218,-5	-.770,-6	.178,-5	-.135,-5	-.120,-5	-.218,-5	-.892,-6	-.192,-5	.900,-5	-.557,-5
53	.349,-6	.995,-6	.255,-5	.438,-6	-.711,-6	-.120,-5	.115,-5	.718,-6	.114,-4	.952,-6
54	-.655,-6	.468,-6	.310,-6	.274,-5	-.385,-7	-.119,-5	-.197,-7	.979,-6	-.217,-5	.700,-5
55	-.804,-6	.147,-5	.132,-5	.171,-5	.222,-6	-.125,-5	.106,-5	.288,-5	-.134,-4	.351,-5
56	.523,-6	.517,-5	.294,-5	.119,-5	-.202,-5	-.293,-5	.440,-5	.898,-5	-.132,-4	-.502,-5
57	-.288,-6	.547,-5	.385,-5	.132,-5	-.208,-5	-.646,-5	.540,-5	.424,-5	-.143,-5	-.107,-4
58	.283,-5	.620,-6	.143,-6	-.559,-6	-.657,-7	-.480,-5	.278,-5	.161,-5	.316,-5	-.317,-5
59	.248,-5	.419,-8	-.145,-5	-.234,-5	.179,-5	-.134,-6	.102,-5	.304,-5	-.103,-5	.308,-5
60	.000	.000	.000	.000	.000	.000	.000	.000	.000	.000

Run No. 16 ; u component

N	Separation Distance (m.)									
	1	12	18	24	30	42	48	72	84	90
00	.000	.000	.000	.000	.000	.000	.000	.000	.000	.000
01	.509,-3	.188,-1	.171,-1	.576,-1	.747,-1	.714,-1	.122	.106	.126	.121
02	.419,-2	.207,-1	.296,-1	.549,-1	.800,-1	.688,-1	.100	.562,-1	.658,-1	.605,-1
03	.813,-2	.363,-1	.364,-1	.577,-1	.764,-1	.609,-1	.642,-1	.120,-1	.644,-2	.260,-2
04	.107,-1	.344,-1	.335,-1	.463,-1	.504,-1	.406,-1	.363,-1	-.197,-2	-.601,-2	-.553,-2
05	.904,-2	.240,-1	.232,-1	.228,-1	.166,-1	.166,-1	.133,-1	-.120,-2	-.357,-2	.379,-4
06	.463,-2	.133,-1	.271,-2	.810,-2	.175,-2	.312,-2	-.979,-5	-.733,-2	-.614,-2	-.170,-2
07	.200,-3	.543,-2	.191,-2	.679,-2	.643,-4	.838,-3	-.202,-2	-.417,-2	-.148,-3	-.150,-2
08	.217,-3	.662,-2	.231,-2	.286,-2	-.315,-2	.127,-2	-.717,-2	-.162,-2	.103,-2	-.240,-2
09	.187,-2	.603,-2	.234,-2	.156,-2	-.977,-3	-.419,-3	-.508,-2	-.628,-3	.253,-2	.731,-3
10	.199,-2	.476,-2	.145,-2	.177,-2	.363,-3	-.601,-3	-.576,-2	.210,-2	-.133,-2	-.211,-2
11	.102,-2	.389,-2	.247,-2	.206,-3	-.167,-2	.141,-2	-.449,-2	.551,-2	-.551,-3	-.228,-2
12	.174,-2	.177,-2	.222,-2	.210,-3	-.162,-2	.139,-2	-.276,-2	.118,-2	-.468,-3	-.736,-3
13	.105,-2	.306,-3	.494,-3	-.657,-4	-.291,-3	-.731,-4	.704,-4	-.391,-3	.637,-3	.651,-3
14	.275,-2	.111,-2	-.151,-2	-.491,-3	.299,-3	.722,-5	-.724,-3	.246,-3	-.131,-2	-.649,-4
15	.332,-2	.359,-3	-.238,-2	.562,-3	-.252,-3	.117,-2	.824,-3	.121,-2	-.610,-3	.483,-3
16	.200,-2	-.301,-3	-.475,-3	.609,-3	-.101,-2	.130,-2	.411,-3	-.174,-2	-.299,-3	-.378,-3
17	.125,-2	-.639,-3	-.296,-4	.106,-2	.466,-6	.296,-3	.126,-2	-.107,-2	.863,-3	.674,-3
18	.148,-2	-.322,-3	.125,-4	.102,-2	-.670,-3	.365,-3	.279,-3	-.223,-3	-.614,-4	.408,-3
19	.101,-2	-.150,-2	-.153,-3	.170,-2	-.154,-2	.310,-3	.632,-3	.832,-3	-.242,-3	.203,-3
20	.129,-3	-.646,-3	-.135,-3	.676,-3	-.104,-2	.577,-3	.283,-3	-.209,-3	-.910,-3	-.113,-2
21	-.409,-4	-.262,-3	-.306,-3	.197,-3	-.199,-3	-.274,-3	.536,-3	-.312,-3	-.680,-3	-.445,-3
22	.603,-3	-.264,-3	.399,-3	.321,-4	-.337,-4	-.681,-3	.215,-4	-.561,-3	-.639,-3	-.219,-3
23	.107,-2	-.413,-3	.152,-3	.209,-3	.905,-4	-.428,-3	.182,-3	-.115,-3	.119,-3	-.317,-3
24	.105,-2	-.394,-3	-.148,-3	-.369,-3	.506,-3	-.104,-2	-.775,-4	-.515,-3	-.445,-3	-.668,-3
25	.100,-2	-.369,-3	-.340,-4	-.119,-3	.657,-3	-.112,-2	.632,-3	.191,-3	.165,-3	.501,-3
26	.932,-3	.326,-4	-.108,-4	.467,-3	.650,-3	-.391,-3	-.305,-3	-.187,-3	.103,-3	.241,-3
27	.642,-3	-.377,-3	-.546,-4	.519,-3	.332,-3	.129,-3	-.498,-3	-.206,-4	.487,-3	.166,-3
28	.708,-3	.506,-4	.126,-3	-.251,-3	-.321,-3	.221,-3	-.564,-3	-.908,-3	-.253,-3	-.142,-3
29	.125,-3	.644,-3	-.499,-3	-.307,-3	-.907,-3	.952,-3	.204,-3	-.594,-3	.464,-3	.308,-3
30	-.177,-3	.441,-3	-.157,-3	.150,-4	-.597,-3	.411,-3	-.312,-3	-.316,-3	.347,-3	-.123,-3
31	-.148,-3	-.173,-3	.284,-3	-.175,-3	-.141,-3	.120,-3	.543,-4	.155,-3	.451,-3	.365,-3
32	-.210,-3	.418,-3	-.500,-5	-.398,-3	-.171,-3	.572,-4	.259,-4	-.450,-3	.114,-3	.201,-4
33	-.202,-3	.743,-3	-.412,-3	.162,-3	-.178,-3	-.753,-4	.232,-3	-.218,-3	.362,-3	-.146,-3
34	.323,-3	.256,-3	-.272,-3	.632,-4	.144,-3	-.255,-3	.333,-3	-.241,-3	-.263,-3	-.867,-3
35	.293,-4	.175,-3	.103,-3	-.103,-3	.134,-3	.539,-4	.625,-3	-.171,-3	-.430,-3	-.757,-3
36	-.464,-3	.305,-3	.573,-3	-.574,-4	.253,-3	-.930,-4	.197,-3	-.698,-3	-.553,-3	-.896,-3
37	-.535,-4	.340,-3	.267,-3	.187,-3	.406,-3	-.372,-3	.330,-3	-.486,-3	-.297,-3	-.207,-3
38	.888,-5	.338,-3	-.641,-4	.233,-3	.632,-3	-.293,-3	-.191,-3	-.636,-3	-.425,-3	.130,-3
39	-.194,-3	.451,-4	-.278,-3	.271,-3	.736,-3	-.707,-4	-.185,-3	-.208,-3	.430,-4	.515,-4
40	-.155,-4	.622,-4	.361,-4	.246,-4	.293,-3	.161,-3	-.677,-4	-.198,-3	-.646,-4	-.123,-3
41	.435,-4	.149,-3	.122,-3	.832,-4	.383,-3	.106,-3	.201,-3	.674,-4	.325,-3	.308,-3
42	-.690,-4	.359,-3	-.304,-4	.126,-3	.554,-3	.350,-4	-.142,-3	-.452,-4	.236,-3	.250,-3
43	-.110,-3	.322,-3	-.339,-3	.696,-4	.410,-3	.320,-4	-.591,-4	.962,-5	.288,-3	.328,-3
44	.152,-3	.171,-3	-.130,-3	-.198,-4	.165,-3	-.243,-4	-.[illegible]-3	-.230,-3	.110,-3	.855,-4
45	.100,-3	.107,-3	-.183,-4	-.546,-4	.114,-3	-.146,-4	.239,-3	.255,-3	.166,-3	.121,-3
46	-.236,-3	.135,-3	-.164,-4	-.495,-4	-.159,-4	.490,-4	.253,-3	.239,-3	-.562,-4	.388,-5
47	-.372,-3	.151,-4	-.137,-3	.456,-4	.289,-3	-.931,-4	.156,-3	.228,-3	-.571,-4	.899,-4
48	-.140,-3	.210,-3	-.572,-4	.477,-4	.325,-3	-.161,-3	-.288,-3	.243,-3	-.162,-3	.135,-3
49	-.104,-3	.309,-3	-.703,-4	.299,-3	.151,-3	-.470,-4	.320,-4	.362,-3	-.557,-4	.230,-3
50	-.277,-3	.273,-3	.183,-3	.311,-3	.209,-4	-.295,-4	.135,-3	-.692,-4	.134,-4	.108,-3
51	-.250,-3	.102,-3	.934,-4	.156,-3	.573,-4	.234,-4	.141,-3	.838,-4	.368,-3	.284,-3
52	-.428,-4	.127,-3	.209,-3	.218,-3	.155,-3	.178,-3	.780,-4	.364,-3	.187,-3	.431,-3
53	.534,-4	.250,-3	.332,-3	.325,-3	.192,-3	-.726,-4	.153,-3	.445,-3	.253,-3	.315,-3
54	.183,-3	.272,-3	-.904,-4	.188,-3	.216,-5	-.212,-3	-.369,-4	.905,-4	.194,-3	-.951,-4
55	.191,-3	.111,-3	-.196,-3	.846,-4	.117,-4	.103,-4	-.102,-3	.772,-4	.767,-4	-.167,-3
56	.163,-3	.392,-4	-.765,-4	-.147,-3	.102,-3	.157,-3	-.142,-3	.133,-3	-.842,-4	-.287,-3
57	.265,-3	.647,-4	-.737,-4	-.753,-4	.560,-4	.241,-3	-.749,-4	.172,-3	-.694,-5	-.252,-3
58	.150,-3	-.120,-3	.262,-4	-.633,-4	-.392,-4	.680,-4	.125,-4	-.676,-4	.211,-3	.329,-4
59	.305,-4	-.294,-3	-.193,-4	-.255,-3	-.195,-4	-.163,-4	.493,-4	-.267,-3	.262,-3	.199,-3
60	.000	.000	.000	.000	.000	.000	.000	.000	.000	.000

Run No. 16 ; v component

N	Separation Distance (m.)									
	6	12	18	24	36	42	48	72	84	90
00	.000	.000	.000	.000	.000	.000	.000	.000	.000	.000
01	-.430,-1	.259,-1	-.188,-1	.542,-1	.723,-1	.271,-1	.373,-1	.611,-1	.723,-1	.384,-1
02	-.281,-1	.231,-1	-.725,-2	.422,-1	.410,-1	.132,-1	.342,-1	.298,-1	.196,-1	.137,-1
03	-.270,-1	.184,-1	-.117,-1	.277,-1	.259,-1	.373,-2	.313,-1	.177,-1	-.244,-3	.822,-2
04	-.240,-1	.147,-1	-.997,-2	.173,-1	.169,-1	.611,-2	.113,-1	.417,-2	-.890,-3	.874,-2
05	-.123,-1	.101,-1	.484,-3	.880,-2	.343,-2	.474,-3	.105,-2	.216,-2	.335,-2	.876,-2
06	-.865,-2	.591,-2	.228,-2	.444,-2	-.104,-2	-.497,-3	-.266,-2	-.207,-3	-.695,-3	.139,-2
07	-.124,-1	.523,-2	.290,-2	.441,-2	.127,-2	.473,-2	.109,-2	-.279,-3	-.519,-3	-.311,-2
08	-.116,-1	.475,-2	.373,-2	.189,-2	-.207,-2	.204,-2	-.249,-2	.103,-2	-.272,-2	-.335,-2
09	-.877,-2	.561,-2	.157,-2	.223,-3	-.419,-2	.134,-3	-.248,-2	.495,-2	-.145,-2	.569,-4
10	-.539,-2	.379,-2	-.160,-3	-.120,-2	-.399,-2	.231,-2	-.140,-2	.881,-3	-.620,-3	-.193,-2
11	-.381,-2	.157,-2	-.149,-3	-.481,-3	-.449,-3	.244,-2	.159,-2	-.145,-3	.368,-3	-.125,-2
12	-.261,-2	.607,-3	.595,-4	-.722,-3	.821,-3	-.842,-3	-.264,-3	-.989,-3	-.118,-2	-.185,-2
13	-.280,-2	.189,-2	-.975,-3	-.130,-2	.334,-3	-.211,-2	-.478,-3	-.550,-3	.863,-3	-.103,-2
14	-.115,-2	.191,-2	-.151,-2	-.167,-2	-.152,-2	-.101,-2	-.112,-2	-.204,-2	-.668,-4	-.683,-3
15	-.373,-3	.329,-3	-.126,-2	-.487,-3	-.525,-3	-.339,-3	.234,-3	-.110,-3	.133,-2	-.140,-3
16	.105,-2	-.042,-3	-.935,-3	.158,-3	-.799,-3	.291,-3	-.688,-3	.390,-3	.832,-3	.297,-4
17	.370,-3	.163,-3	-.107,-2	.102,-2	.505,-3	.719,-3	-.144,-3	.666,-3	.764,-3	.102,-2
18	.340,-3	.123,-2	-.144,-2	.343,-3	.813,-5	.766,-4	-.817,-5	-.108,-2	-.392,-3	-.111,-3
19	.324,-3	.132,-2	-.149,-2	.102,-3	.455,-3	.772,-4	.531,-3	-.216,-3	.726,-3	.849,-5
20	.653,-3	.144,-3	-.348,-3	-.501,-4	-.206,-3	-.481,-3	-.314,-4	-.777,-4	-.351,-3	.257,-3
21	.137,-2	-.390,-3	.706,-4	.852,-3	.648,-3	-.293,-3	.765,-3	.630,-3	.393,-3	.630,-3
22	.297,-2	-.360,-3	.341,-4	.443,-3	-.119,-3	-.335,-3	.749,-4	.145,-3	.224,-3	-.454,-3
23	.220,-2	-.379,-3	-.574,-3	.160,-3	-.552,-3	-.252,-3	.772,-3	.287,-3	.629,-3	.111,-3
24	.146,-2	-.290,-3	-.112,-2	-.196,-3	-.950,-4	-.267,-3	.482,-3	-.228,-3	-.134,-3	.141,-3
25	.123,-2	-.355,-3	-.943,-3	.388,-3	.739,-3	.566,-4	.932,-3	.579,-3	-.157,-3	.337,-3
26	.533,-3	-.352,-4	-.231,-3	.177,-3	-.480,-4	.919,-4	.115,-3	-.732,-4	-.665,-3	-.389,-3
27	.550,-4	-.387,-4	.169,-3	.864,-4	-.301,-3	-.419,-4	.367,-5	.138,-3	.156,-3	-.371,-3
28	.516,-3	-.106,-4	.219,-3	-.223,-3	-.305,-3	-.250,-3	-.179,-3	-.274,-3	-.436,-3	-.111,-3
29	.645,-3	.355,-3	-.192,-3	-.111,-3	.213,-3	-.208,-3	.300,-3	-.202,-3	.790,-4	.590,-3
30	.497,-3	.645,-3	-.197,-3	-.213,-3	-.128,-3	-.299,-3	-.464,-3	-.435,-3	-.170,-3	.476,-3
31	.276,-3	.622,-3	.134,-3	-.161,-3	-.107,-3	-.229,-4	-.213,-3	-.117,-3	.227,-3	.803,-3
32	.756,-3	.743,-3	.306,-3	-.188,-3	-.139,-3	-.529,-4	-.331,-3	.985,-4	.903,-4	.492,-3
33	.706,-3	.750,-3	.136,-3	.128,-3	.527,-3	.299,-3	.446,-4	.560,-3	.698,-3	.405,-3
34	.849,-3	-.995,-4	.118,-3	-.188,-3	.218,-3	.388,-3	-.349,-3	-.457,-3	.264,-3	-.834,-4
35	.558,-3	-.344,-3	-.859,-4	-.249,-3	.246,-3	.158,-3	-.180,-3	-.710,-6	.206,-3	.283,-3
36	.209,-3	-.140,-3	-.269,-3	-.202,-3	.920,-4	.196,-3	-.503,-3	-.157,-4	-.308,-3	.196,-3
37	.776,-4	-.775,-4	-.212,-3	.172,-4	.310,-4	.342,-3	-.282,-4	-.127,-3	-.918,-4	.903,-4
38	.700,-4	-.311,-3	-.935,-4	.237,-3	.935,-4	.453,-3	.336,-4	-.130,-3	-.470,-3	-.235,-3
39	-.539,-3	-.271,-3	-.490,-3	.509,-3	.891,-3	.468,-3	.182,-3	.685,-4	-.222,-3	-.159,-3
40	-.663,-3	-.145,-3	-.647,-3	.151,-3	.733,-3	.434,-3	.892,-4	-.187,-3	.178,-3	-.436,-3
41	-.555,-3	-.305,-4	-.285,-3	.271,-4	.266,-3	.260,-3	.178,-3	.232,-3	.992,-4	-.155,-3
42	-.464,-3	.116,-4	-.372,-5	-.234,-3	-.267,-3	-.425,-4	-.286,-3	-.162,-4	-.150,-3	-.151,-3
43	-.457,-3	.772,-4	.141,-3	-.278,-3	-.780,-4	.818,-4	-.291,-3	.399,-4	.213,-3	.257,-3
44	-.142,-3	.165,-4	.224,-3	-.127,-3	-.171,-4	.803,-4	-.419,-3	-.332,-4	.125,-3	.244,-3
45	-.263,-3	.194,-3	.153,-4	-.110,-3	.173,-3	.106,-3	-.172,-3	-.301,-4	.429,-3	.256,-3
46	-.399,-3	.247,-3	-.313,-3	-.146,-3	.569,-4	.127,-3	-.188,-3	-.208,-3	.176,-3	-.116,-3
47	-.580,-4	.296,-3	-.458,-3	-.306,-4	-.915,-4	.203,-3	.913,-4	-.950,-4	.171,-3	-.201,-3
48	.337,-3	.178,-3	-.429,-3	-.782,-4	-.174,-3	.217,-3	.925,-4	-.339,-3	.236,-3	-.129,-3
49	-.162,-4	.178,-3	-.349,-3	-.596,-4	-.104,-3	.204,-3	.125,-3	-.179,-3	.133,-3	.201,-3
50	-.370,-3	.233,-3	-.108,-3	.259,-4	-.206,-3	-.203,-4	-.256,-3	-.146,-4	-.282,-3	.141,-3
51	-.306,-3	.158,-4	.510,-4	.132,-3	.437,-4	-.259,-3	-.256,-3	.115,-3	.209,-3	.133,-3
52	.822,-4	.719,-5	.395,-4	.170,-4	.237,-4	-.227,-3	-.108,-4	-.559,-4	.342,-3	-.879,-4
53	.194,-4	.268,-3	.243,-4	-.408,-4	.673,-4	.565,-4	.253,-3	.120,-3	.573,-4	.901,-4
54	.369,-4	.400,-3	-.206,-3	.186,-3	-.542,-4	.165,-3	-.204,-3	.224,-4	-.218,-4	.709,-4
55	.205,-3	.323,-3	-.339,-3	.372,-3	-.805,-5	-.742,-4	-.103,-4	.707,-5	.851,-4	.327,-3
56	.986,-4	.206,-3	-.236,-3	.154,-3	-.244,-3	-.474,-5	-.501,-4	.120,-3	-.374,-3	.305,-3
57	.101,-3	.223,-4	-.683,-4	-.739,-4	-.294,-3	-.448,-5	-.270,-3	.133,-3	-.503,-3	.207,-3
58	.288,-3	-.175,-3	-.244,-3	-.125,-3	-.107,-3	-.338,-3	-.539,-5	.407,-4	-.174,-3	.388,-3
59	.820,-4	-.125,-3	-.245,-3	-.815,-4	-.143,-3	-.150,-3	.137,-3	-.118,-3	-.665,-4	.120,-3
60	.000	.000	.000	.000	.000	.000	.000	.000	.000	.000

Run No. 17; u component

N	Separation Distance (m.) 6	12	18	24	36	42	48	72	84	90
00	.000	.000	.000	.000	.000	.000	.000	.000	.000	.000
01	.349,-2	.858,-2	.113,-1	.102,-1	.164,-1	.159,-1	.109,-1	.242,-2	.874,-2	.915,-2
02	.402,-2	.917,-2	.115,-1	.148,-1	.157,-1	.134,-1	.672,-2	.702,-2	.556,-2	.510,-2
03	.616,-2	.926,-2	.113,-1	.135,-1	.952,-2	.773,-2	-.316,-2	.500,-3	-.148,-2	-.155,-2
04	.686,-2	.959,-2	.112,-1	.782,-2	.418,-2	.354,-2	.830,-3	-.354,-2	-.696,-2	-.760,-2
05	.624,-2	.990,-2	.107,-1	.657,-2	.327,-2	.427,-2	.[illegible],-2	-.464,-2	-.650,-2	-.555,-2
06	.745,-2	.109,-1	.572,-2	.197,-2	.134,-2	.210,-2	-.116,-2	-.227,-2	-.402,-2	-.214,-2
07	.599,-2	.869,-2	.502,-2	.192,-2	-.247,-3	-.736,-3	-.205,-2	.339,-3	-.134,-2	-.101,-2
08	.461,-2	.662,-2	.294,-2	.112,-3	-.251,-3	-.205,-2	-.109,-3	.576,-3	-.903,-4	-.763,-3
09	.272,-2	.433,-2	.110,-2	-.220,-2	.252,-2	.894,-3	.131,-2	.211,-3	-.297,-3	-.639,-3
10	.274,-2	.287,-2	.578,-3	-.140,-2	.114,-2	.193,-2	.117,-2	.138,-2	-.121,-2	-.160,-2
11	.472,-2	.369,-2	.981,-3	-.883,-3	-.109,-2	.183,-2	.818,-3	.140,-2	-.530,-3	-.253,-2
12	.534,-2	.374,-2	.734,-3	-.207,-2	-.125,-2	.120,-2	-.181,-3	.211,-3	.125,-2	-.266,-2
13	.303,-2	.150,-2	-.777,-3	-.217,-2	.219,-3	.892,-3	-.261,-3	-.180,-3	.108,-2	-.178,-2
14	.403,-2	.739,-3	-.296,-2	-.223,-2	.161,-2	-.776,-3	.583,-3	.601,-3	.515,-4	-.141,-2
15	.399,-2	.612,-3	-.278,-2	-.149,-2	.133,-2	-.554,-3	.417,-4	.275,-3	.394,-4	-.311,-3
16	.240,-2	.359,-3	-.125,-2	.277,-3	.386,-3	.411,-3	.561,-3	.638,-3	.688,-4	-.641,-4
17	.154,-2	.243,-3	-.627,-3	-.136,-3	-.302,-3	.360,-3	-.855,-4	.709,-3	-.372,-3	-.242,-3
18	.855,-3	.103,-3	-.329,-3	-.429,-3	-.466,-3	-.246,-3	-.458,-3	.135,-3	-.193,-3	-.114,-2
19	.136,-2	.115,-3	-.135,-3	-.773,-3	.975,-4	-.550,-3	-.345,-4	.130,-4	.356,-3	-.126,-2
20	.200,-2	-.356,-3	-.175,-3	-.108,-2	.176,-3	-.265,-3	.103,-2	.939,-3	.325,-3	-.348,-3
21	.198,-2	-.101,-2	-.540,-3	-.206,-3	.577,-3	.334,-3	.406,-3	.748,-3	.202,-5	.344,-3
22	.143,-2	-.574,-3	-.255,-3	-.221,-3	.760,-3	-.291,-3	-.649,-4	.330,-3	.698,-4	.865,-4
23	.115 -2	-.696,-4	-.179,-3	-.480,-3	.741,-3	-.772,-3	-.234,-3	.162,-3	.216,-3	-.383,-4
24	.967,-3	-.370,-4	.640,-4	-.146,-3	.529,-3	-.575,-3	-.191,-4	.238,-3	.418,-3	-.916,-4
25	.521,-3	-.658,-3	.342,-3	-.141,-3	.901,-4	.202,-3	.259,-3	.279,-3	.493,-3	-.204,-3
26	.183,-3	-.874,-3	.343,-3	-.111,-3	.477,-5	.301,-4	.181,-3	-.541,-4	.261,-3	-.362,-3
27	-.636,-4	-.825,-3	.187,-3	.602,-4	.297,-3	-.176,-3	-.170,-3	-.104,-3	-.437,-3	.337,-4
28	-.217,-3	-.586,-3	-.324,-5	.280,-4	.409,-3	-.439,-3	-.289,-3	.236,-3	-.843,-3	.188,-3
29	-.569,-4	-.243,-3	-.972,-4	.785,-4	.459,-3	-.307,-3	-.319,-3	.190,-4	-.539,-3	.872,-4
30	-.159,-3	-.175,-3	-.269,-4	-.599,-4	.358,-3	-.398,-3	-.345,-3	.430,-4	-.453,-3	.482,-4
31	-.295,-4	-.512,-3	.151,-3	-.743,-3	.227,-3	-.448,-3	.363,-4	-.259,-4	-.574,-3	-.785,-4
32	.972,-4	-.671,-3	.331,-3	-.555,-3	-.922,-4	-.429,-3	.362,-3	-.339,-3	-.368,-3	-.318,-3
33	-.188,-3	-.357,-3	.623,-4	.216,-3	-.439,-4	-.238,-3	.218,-4	.515,-4	-.267,-3	-.101,-3
34	-.291,-3	-.139,-3	.464,-4	.241,-3	.987,-4	-.353,-3	-.280,-3	.402,-3	-.419,-3	.239,-4
35	-.218,-3	-.232,-3	.128,-3	.249,-3	.447,-3	-.102,-3	-.211,-3	.784,-4	-.320,-3	-.283,-4
36	-.388,-3	-.140,-3	.209,-3	.134,-3	.476,-3	-.664,-4	-.213,-4	-.872,-4	-.281,-3	-.222,-3
37	-.637,-3	-.132,-3	.600,-4	.572,-4	.473,-3	-.156,-3	-.367,-4	-.927,-4	-.104,-3	-.137,-3
38	-.532,-3	-.902,-4	-.840,-4	.106,-4	.675,-4	.258,-4	-.277,-3	.112,-3	.352,-3	-.269,-3
39	-.308,-3	-.922,-4	-.196,-3	-.459,-5	-.175,-3	.394,-3	-.241,-3	.191,-3	.227,-3	-.329,-3
40	-.609,-3	-.107,-3	-.[illegible]3,-3	.182,-3	-.379,-3	.361,-3	-.265,-4	-.148,-3	.735,-5	-.494,-3
41	-.744,-3	-.163,-3	-.259,-3	.131,-3	-.243,-3	.203,-3	-.109,-3	-.581,-3	-.463,-4	-.345,-3
42	-.360,-3	-.671,-4	-.366,-3	-.613,-5	.259,-3	-.220,-3	.923,-4	-.475,-3	-.196,-3	-.142,-3
43	-.242,-4	.212,-3	-.271,-3	.302,-4	.296,-3	-.427,-3	-.292,-4	-.244,-3	-.782,-4	-.229,-3
44	.278,-4	.342,-3	.937-4	-.822,-4	.108,-3	-.257,-3	-.165,-3	.179,-3	.610,-4	-.209,-3
45	.652,-4	.905,-4	.920,-4	-.176,-3	.252,-3	.151,-4	-.121,-3	-.126,-3	.133,-3	-.993,-4
46	.147,-4	.276,-5	-.709,-5	-.321,-3	.332,-3	-.218,-5	-.144,-3	-.248,-3	.163,-3	.404,-4
47	.819,-4	.397,-4	.123,-4	-.117,-3	.185,-3	-.592,-4	-.131,-3	- 211,-3	.202,-3	.239,-3
48	-.232,-4	-.111,-3	-.123,-3	.140,-3	.963,-4	-.187,-5	.121,-3	.390,-4	.204,-3	.340,-3
49	-.740,-4	-.164,-3	-.189,-3	.776,-4	.322.-4	-.480,-4	.500,-4	.699,-4	.537,-4	.102,-3
50	.834,-4	.878,-4	-.928,-5	.193,-5	-.928,-4	.616,-4	-.527,-4	.109,-3	-.196,-3	-.721,-4
51	.102,-3	.298,-3	-.298,-4	-.979,-4	-.118,-3	.871,-4	-.209,-3	.596,-4	-.118,-3	-.909,-4
52	-.901,-4	.163,-3	-.104,-3	-.352,-4	-.991,-4	-.458,-5	-.150,-3	-.133,-3	.736,-5	-.108,-3
53	-.269,-3	.135,-4	-.687,-4	.896,-4	-.284,-4	-.115,-3	-.489,-5	-.146,-3	.171,-3	-.128,-4
54	-.208,-3	.985,-4	-.506,-4	.992,-4	.957,-4	-.162,-4	.246,-4	.139,-3	.301,-3	.162,-3
55	-.246,-3	.138,-4	-.147,-3	.601,-5	.142,-3	.978,-4	-.626,-4	.124,-3	.214,-3	-.199,-4
56	-.224,-3	-.764,-4	-.149,-3	-.210,-3	-.888,-4	.211,-4	.387,-4	.328,-4	.696,-4	-.195,-3
57	.642,-4	-.103,-3	.974,-4	-.244,-3	-.205,-3	-.361,-4	-.139,-3	-.768,-4	-.124,-3	-.174,-3
58	.137,-3	-.449,-4	.624,-4	-.236,-3	-.288,-4	-.208,-3	-.146,-3	-.119,-3	-.175,-3	-.207,-3
59	.156,-3	.141,-4	-.643,-4	-.822,-4	.479,-4	-.209,-3	.537,-4	.270,-4	-.229,-3	-.291,-3
60	.000	.000	.000	.000	.000	.000	.000	.000	.000	.000

Run No. 17 ; v component

Separation Distance (m.)

N	6	12	18	24	36	42	48	72	84	90
00	.000	.000	.000	.000	.000	.000	.000	.000	.000	.000
01	.134,-2	.112,-2	.126,-2	.116,-2	.198,-2	.166,-2	-.217,-2	-.149,-2	-.146,-2	.733,-4
02	.215,-2	.128,-2	.180,-2	.173,-2	.100,-2	.150,-2	-.150,-2	-.194,-2	-.232,-2	-.424,-3
03	.222,-2	.142,-2	.171,-2	.103,-2	-.100,-3	.529,-3	-.235,-3	-.167,-2	-.275,-2	-.528,-3
04	.209,-2	.130,-2	.935,-3	.253,-3	.531,-3	.732,-3	-.987,-3	-.560,-3	-.291,-2	-.308,-3
05	.239,-2	.156,-2	.604,-3	.131,-3	.591,-3	.540,-3	-.102,-2	.210,-3	-.251,-2	-.605,-3
06	.258,-2	.186,-2	-.173,-3	-.372,-3	.338,-3	-.311,-3	-.246,-3	.131,-3	-.108,-2	-.112,-2
07	.260,-2	.125,-2	-.806,-3	-.550,-3	.294,-3	-.814,-3	.248,-3	.143,-3	-.480,-3	-.136,-2
08	.154,-2	.758,-3	-.603,-3	-.557,-3	-.102,-3	-.342,-3	.391,-3	.401,-3	.540,-4	-.110,-2
09	.810,-3	.126,-3	-.133,-3	-.845,-5	-.206,-3	-.124,-3	.125,-3	-.297,-3	.134,-2	-.865,-3
10	.926,-3	-.897,-3	-.929,-4	.521,-3	-.515,-3	-.677,-4	-.383,-4	-.317,-3	.628,-3	-.374,-3
11	.111,-2	-.111,-2	.163,-3	.171,-3	-.615,-3	-.702,-4	.485,-4	.279,-3	-.156,-3	.223,-3
12	.799,-3	-.990,-3	.105,-3	-.298,-3	-.659,-4	-.320,-3	.848,-4	.460,-3	.456,-3	.556,-4
13	.975,-4	-.890,-3	.787,-3	-.223,-3	.335,-3	-.484,-3	.163,-5	-.381,-3	.742,-3	-.400,-3
14	-.793,-3	-.975,-3	.133,-2	.596,-4	.495,-3	-.466,-3	.133,-3	-.591,-3	.278,-3	-.108,-3
15	-.657,-3	-.962,-3	.230,-3	.245,-3	.400,-3	-.243,-3	.476,-3	-.187,-3	.571,-4	.290,-3
16	-.465,-3	-.868,-3	-.528,-3	-.116,-3	.434,-3	-.731,-4	.562,-3	-.318,-3	-.231,-3	-.118,-3
17	-.690,-3	-.548,-3	-.171,-3	-.972,-4	.458,-4	.163,-3	.365,-3	-.770,-3	-.102,-3	-.288,-3
18	-.104,-2	-.245,-3	-.667,-4	-.413,-4	-.304,-3	-.142,-3	.310,-3	-.526,-3	-.111,-4	.402,-4
19	-.766,-3	.455,-4	-.145,-3	.121,-3	-.410,-3	.147,-3	.238,-3	-.572,-4	-.217,-3	-.711,-5
20	-.563,-3	.309,-3	-.244,-3	.277,-3	-.216,-3	.335,-3	.110,-3	.116,-3	.290,-3	-.100,-3
21	-.726,-3	.470,-3	-.325,-3	.512,-5	-.123,-3	-.147,-4	-.298,-4	.256,-3	.300,-3	-.249,-3
22	-.803,-3	.623,-3	-.322,-3	.121,-3	.252,-3	.271,-3	-.656,-4	.216,-3	.227,-3	-.357,-3
23	-.455,-3	.422,-3	-.260,-3	.510,-3	.558,-3	.839,-3	120,-3	-.390,-3	.377,-3	-.909,-4
24	-.183,-3	.642,-4	-.113,-3	.829,-3	.340,-3	.581,-3	.312,-3	-.285,-3	-.304,-3	-.405,-4
25	.224,-3	-.273,-3	.426,-4	.531,-3	.217,-3	.801,-4	.378,-3	-.322,-4	-.547,-3	-.470,-3
26	.421,-3	-.130,-3	-.153,-4	-.408,-4	.101,-3	.135,-4	.250,-3	-.104,-3	-.250,-3	-.210,-3
27	.653,-3	-.799,-4	.524,-4	-.100,-3	.426,-5	.419,-4	.232,-3	.235,-4	-.415,-4	-.123,-3
28	.997,-3	-.626,-4	.728,-4	.266,-4	.121,-3	-.200,-3	.248,-4	-.631,-4	.151,-3	-.136,-3
29	.870,-3	-.127,-3	.684,-4	-.681,-4	.344,-3	-.154,-3	-.351,-3	-.292,-3	.511,-3	.486,-3
30	.440,-3	-.500,-4	-.924,-4	-.125,-3	.234,-3	.371,-4	-.759,-4	-.920,-4	.483,-3	.685,-3
31	.275,-3	-.200,-3	-.758,-4	-.289,-4	-.160,-3	.109,-3	.156,-3	.749,-5	.376,-3	.407,-3
32	.324,-3	-.228,-3	.132,-3	.378,-4	-.120,-3	.112,-4	.102,-3	-.184,-4	.332,-3	.502,-3
33	.235,-3	-.135,-3	.318,-3	.675,-4	.230,-3	.205,-3	.811,-4	-.114,-4	.287,-3	.501,-3
34	.539,-4	-.418,-4	.196,-3	.172,-3	370,-3	.272,-3	-.125,-3	-.148,-3	.850,-4	.102,-3
35	-.620,-4	.557,-4	.588,-4	.663,-4	.292,-4	.176,-3	-.225,-3	.146,-3	.730,-4	.339,-3
36	.164,-4	.489,-4	.973,-4	.125,-4	-.298,-3	.130,-4	-.183,-3	.184,-3	-.180,-3	.335,-3
37	.532,-4	-.254,-3	.122,-3	.106,-3	-.284,-3	.150,-4	-.517,-3	-.294,-3	-.396,-3	.974,-4
38	.910,-4	-.344,-4	.102,-3	.207,-3	.700,-4	.645,-4	-.811,-3	-.259,-3	-.341,-3	-.233,-3
39	-.372,-4	.262,-3	.570,-4	.149,-3	.175,-3	.255,-3	-.163,-3	-.315,-4	-.956,-4	-.196,-3
40	.426,-5	.223,-3	-.261,-4	.152,-3	.351,-3	.185,-3	.247,-3	.957,-4	.271,-4	-.101,-3
41	-.585,-5	-.101,-3	-.611,-4	-.473,-4	.349,-3	-.668,-4	.197,-3	,876,-4	.209,-3	-.148,-3
42	-.366,-3	-.213,-3	-.907,-4	-.389,-4	.140,-4	.755,-4	.217,-4	.749,-4	.309,-3	-.299,-4
43	-.187,-3	.477,-4	-.153,-3	-.143,-3	-.202,-3	.386,-3	.311,-4	.135,-4	.598,-4	-.121,-3
44	.640,-4	.242,-3	-.148,-3	-.229,-3	-.331,-4	.358,-3	.218,-3	-.882,-5	-.393,-3	-.271,-3
45	.125,-3	.923,-4	-.120,-4	-.599,-4	.382,-3	.158,-3	.183,-3	-.463,-4	-.346,-3	.851,-4
46	.968,-4	-.101,-3	-.396,-4	.128,-3	.460,-3	-.910,-5	-.770,-4	.165,-4	-.947,-4	.205,-3
47	.221,-3	-.244,-3	-.642,-4	.622,-4	.462,-4	-.123,-3	-.156,-3	.763,-4	-.129,-3	.577,-4
48	-.144,-5	-.161,-3	-.130,-3	.114,-4	-.185,-3	-.184,-3	-.793,-4	.928,-4	.707,-4	-.442,-4
49	-.159,-3	-.018,-3	-.122,-3	.240,-3	-.105,-3	-.175,-3	.250,-4	.399,-4	.175,-3	-.158,-3
50	-.142,-3	-.929,-4	-.118,-3	.225,-3	-.176,-3	-.154,-3	.281,-3	.829,-5	.476,-4	-.199,-3
51	-.113,-3	.311,-4	-.824,-4	.281,-4	-.158,-3	.384,-5	.497,-3	-.186,-3	-.418,-4	-.239,-3
52	.141,-3	-.137,-4	.969,-4	.185,-4	-.324,-4	.205,-3	.402,-3	-.134,-3	.632,-4	.595,-4
53	.257,-3	-.407,-4	.350,-3	-.571,-5	-.207,-4	.966,-4	.165,-3	-.802,-4	.501,-4	.142,-3
54	.986,-4	-.763,-4	.301,-3	-.177,-3	-.757,-4	.120,-3	-.121,-3	-.210,-3	-.544,-4	-.796,-4
55	-.289,-4	-.814,-4	.819,-4	-.216,-3	-.928,-4	.676,-4	-.665,-4	-.171,-3	-.396,-4	.812,-4
56	.944,-4	.182,-3	.113,-3	-.113,-3	-.552,-4	.674,-4	.118,-3	-.212,-3	.206,-3	.107,-3
57	.176,-3	.209,-3	.126,-3	-.250,-4	-.443,-4	.783,-4	.713,-4	-.317,-3	.198,-3	-.102,-3
58	-.911,-5	.207,-3	-.545,-4	-.609,-4	.168,-3	.209,-4	-.348,-4	-.215,-3	-.308,-4	-.105,-3
59	-.436,-4	.907,-4	-.769,-4	-.140,-3	.202,-3	.587,-4	-.574,-4	-.707,-4	.143,-5	-.139,-3
60	.000	.000	.000	.000	.000	.000	.000	.000	.000	.000

Run No. 17 ; w component

N	Separation Distance (m.)									
	6	12	18	24	36	42	48	72	84	96
00	.000	.000	.000	.000	.000	.000	.000	.000	.000	.000
01	-.633,-2	.129,-2	-.474,-3	-.207,-3	.342,-4	.336,-3	-.181,-3	-.228,-3	.737,-5	-.595,-4
02	-.280,-2	.188,-3	-.468,-4	-.834,-3	-.639,-4	-.324,-4	-.189,-4	-.349,-3	-.348,-3	-.121,-3
03	.120,-3	.856,-3	.263,-3	-.510,-3	.173,-3	.131,-4	-.664,-4	-.245,-4	-.206,-3	.713,-4
04	.355,-3	.373,-3	.635,-3	-.474,-3	.170,-3	.411,-3	-.610,-4	.113,-3	-.164,-4	-.299,-4
05	.425,-3	.454,-3	.850,-3	-.255,-3	-.125,-3	.482,-3	-.136,-3	-.123,-3	.261,-4	-.157,-3
06	.281,-3	.473,-3	.334,-3	-.348,-3	-.224,-3	.255,-3	-.509,-4	-.260,-3	-.124,-3	-.161,-3
07	.516,-3	.191,-3	-.200,-3	-.916,-4	-.255,-3	-.103,-3	.329,-4	-.918,-4	.421,-3	.392,-4
08	.726,-3	.491,-4	-.174,-3	-.830,-3	-.426,-3	-.176,-3	.172,-3	.154,-3	-.562,-3	.170,-3
09	.403,-3	.153,-4	.763,-4	-.859,-3	-.321,-4	-.143,-4	-.723,-4	.246,-3	-.496,-3	.106,-3
10	.359,-3	.739,-4	.312,-3	-.448,-4	.200,-3	-.161,-3	-.117,-3	.607,-4	-.213,-4	.981,-4
11	.250,-3	.339,-3	.572,-4	-.502,-4	-.259,-4	-.140,-3	-.171,-5	.117,-3	.842,-4	-.164,-4
12	.144,-3	.429,-3	-.141,-3	-.352,-3	-.800,-4	-.741,-5	-.904,-4	.425,-3	-.126,-3	-.104,-5
13	.434,-3	.149,-3	-.187,-3	-.256,-3	.723,-4	.313,-4	-.170,-3	.426,-3	-.181,-3	.742,-4
14	.583,-3	.103,-3	.133,-3	.671,-4	.101,-3	.476,-5	-.551,-4	.959,-4	-.106,-3	.742,-4
15	.402,-3	-.579,-4	.157,-3	.112,-3	.134,-4	.452,-4	-.748,-4	.103,-3	.000,-4	.499,-4
16	.444,-3	-.136,-3	.684,-4	.572,-4	-.162,-4	.258,-4	-.162,-3	.252,-3	-.261,-3	-.502,-4
17	.518,-3	-.965,-4	.154,-3	.381,-4	-.226,-4	-.227,-5	-.135,-3	.121,-3	-.461,-3	-.951,-4
18	.583,-3	-.256,-3	.154,-3	-.729,-4	-.995,-4	-.153,-3	-.382,-4	-.122,-3	-.211,-3	.107,-4
19	.645,-3	-.283,-3	-.384,-3	-.629,-4	.603,-4	-.156,-3	.448,-4	-.254,-3	-.872,-5	.908,-5
20	.639,-3	-.227,-3	-.492,-3	-.405,-4	.302,-3	-.628,-4	.125,-3	-.199,-3	.143,-3	-.223,-3
21	.511,-3	-.175,-3	-.363,-3	-.113,-5	.191,-3	.669,-4	.748,-4	-.119,-3	.232,-3	-.797,-4
22	.466,-3	-.145,-3	-.171,-3	.449,-4	.139,-3	-.210,-4	-.547,-4	-.157,-3	.672,-4	.213,-3
23	.611,-3	-.316,-3	-.934,-4	-.677,-4	.310,-3	-.651,-4	-.198,-3	-.157,-3	-.820,-4	.219,-3
24	.806,-3	-.346,-3	.629,-5	-.290,-3	.358,-3	-.194,-3	-.262,-3	-.167,-3	.130,-3	.395,-4
25	.727,-3	-.290,-3	-.768,-4	-.238,-3	.506,-4	-.321,-3	-.235,-3	-.280,-3	.149,-3	-.197,-3
26	.683,-3	-.412,-3	-.241,-3	-.175,-3	-.262,-3	-.570,-3	-.369,-4	-.311,-3	-.860,-4	-.330,-3
27	.615,-3	-.480,-3	.156,-3	-.184,-3	-.246,-3	-.571,-3	.356,-4	-.209,-3	-.233,-3	-.158,-3
28	.745,-3	-.496,-3	.242,-3	-.666,-4	-.126,-3	-.276,-3	.783,-4	-.192,-3	-.239,-3	.119,-3
29	.136,-3	-.244,-3	-.309,-5	-.116,-3	-.172,-3	.293,-4	.814,-4	-.418,-4	-.104,-3	.101,-3
30	.609,-4	-.172,-3	-.617,-4	-.231,-3	-.144,-3	-.101,-3	.275,-4	.218,-3	.283,-5	-.417,-4
31	.398,-3	-.949,-5	.715,-4	-.238,-3	-.149,-3	-.246,-3	.537,-4	.291,-4	.712,-5	-.907,-4
32	.237,-3	.302,-4	.614,-4	-.213,-3	-.102,-3	-.133,-3	.159,-3	-.143,-3	-.125,-3	-.973,-4
33	.242,-3	-.235,-4	-.838,-4	-.129,-3	.170,-3	-.118,-3	.103,-3	-.947,-4	.351,-4	-.121,-3
34	.604,-3	.926,-4	-.248,-3	-.334,-3	.479,-3	-.278,-3	.510,-4	-.434,-4	.289,-3	-.629,-4
35	.600,-3	.841,-4	.612,-5	.119,-3	.232,-3	-.246,-3	.108,-3	.797,-4	.143,-3	-.289,-4
36	.461,-3	.267,-3	.410,-3	.158,-3	-.114,-3	-.207,-3	.708,-4	.147,-3	.185,-4	.145,-3
37	.465,-3	.421,-3	.232,-3	.170,-4	-.209,-4	-.122,-3	-.113,-3	.200,-3	.141,-3	-.277,-4
38	.553,-3	.170,-3	.234,-3	-.121,-3	.795,-4	.627,-4	-.147,-3	.448,-4	.128,-3	-.141,-3
39	.642,-3	-.623,-4	.513,-3	-.173,-3	-.830,-4	.142,-3	-.626,-4	-.139,-3	-.405,-4	-.117,-4
40	.643,-3	-.242,-4	.264,-3	-.112,-3	-.142,-3	.939,-4	-.909,-4	-.493,-4	-.157,-3	.264,-4
41	.365,-3	.151,-3	-.347,-3	.689,-4	-.204,-3	.208,-3	-.201,-3	-.522,-4	-.354,-3	.813,-4
42	.188,-3	.176,-3	-.500,-3	.948,-4	-.210,-3	.292,-3	-.232,-3	-.315,-4	-.395,-3	.264,-3
43	.361,-3	.203,-3	-.217,-3	.215,-3	-.167,-3	.186,-3	-.136,-3	.940,-4	-.303,-3	.318,-3
44	.373,-3	.226,-4	-.676,-4	.220,-3	-.112,-3	.704,-4	-.466,-5	.123,-3	-.154,-3	.131,-3
45	.300,-3	-.668,-4	-.704,-4	.142,-3	-.412,-4	-.463,-4	.955,-4	.263,-4	-.303,-4	-.210,-4
46	.543,-3	.653,-4	-.652,-4	.934,-3	.522,-4	.305,-4	.129,-3	-.437,-4	-.521,-4	-.164,-4
47	.500,-3	.251,-3	-.236,-4	.149,-3	.756,-4	.128,-3	.141,-3	-.166,-3	-.296,-4	.352,-4
48	.316,-3	.129,-3	-.279,-3	.343,-4	.165,-3	.308,-4	.695,-4	-.161,-3	.112,-3	-.447,-4
49	.200,-3	-.625,-4	-.215,-3	-.979,-4	.675,-4	.112,-3	-.709,-4	-.277,-5	.559,-4	.618,-4
50	.279,-3	-.639,-4	-.250,-4	-.133,-3	-.306,-5	.247,-3	-.151,-3	.129,-3	.738,-4	.110,-3
51	.862,-4	-.105,-3	-.620,-4	.359,-5	-.535,-4	.274,-3	-.148,-3	.840,-4	.177,-3	-.234,-4
52	.700,-4	-.123,-3	.137,-4	-.310,-5	-.193,-4	.121,-3	.398,-4	-.147,-3	.124,-3	-.181,-3
53	.298,-3	.117,-3	.198,-3	-.112,-3	-.605,-5	-.235,-4	-.179,-4	-.102,-3	.186,-3	-.699,-4
54	.296,-3	.747,-4	.272,-3	-.601,-4	.711,-4	-.141,-3	.113,-3	-.137,-3	.806,-4	.231,-3
55	-.541,-5	-.513,-4	.338,-3	-.139,-3	.859,-5	-.177,-3	.648,-4	-.391,-4	-.926,-5	.174,-3
56	-.690,-4	.245,-4	.232,-3	-.104,-3	-.350,-4	-.131,-3	-.112,-3	.729,-4	.146,-3	-.671,-4
57	.163,-3	.229,-4	.856,-4	-.300,-4	-.147,-4	-.150,-3	-.900,-4	.240,-4	.255,-3	-.118,-3
58	.196,-3	.210,-4	.814,-4	-.115,-3	-.162,-3	-.146,-3	.146,-3	.108,-3	.531,-4	.751,-4
59	.710,-5	-.194,-5	.751,-4	.206,-4	-.496,-4	-.205,-3	.154,-3	-.367,-4	-.151,-3	.195,-3
60	.000	.000	.000	.000	.000	.000	.000	.000	.000	.000

Run No. 21 ; u component

Separation Distance (m.)

N	6	12	18	24	36	48	60	72	84	90
00	.000	.000	.000	.000	.000	.000	.000	.000	.000	.000
01	.101,-1	.753,-2	.145,-1	.468,-1	.506,-1	.432,-1	-.501,-2	.900,-2	.752,-2	-.458,-4
02	.487,-2	.391,-2	.681,-2	.582,-1	.457,-1	.325,-1	.411,-1	.585,-1	.422,-1	.264,-1
03	.318,-2	.750,-2	.953,-2	.476,-1	.358,-1	.251,-1	.419,-1	.428,-1	.408,-1	.312,-1
04	.400,-2	.799,-2	.107,-1	.287,-1	.239,-1	.147,-1	.230,-1	.108,-2	.759,-2	.747,-2
05	.647,-2	.120,-1	.147,-1	.234,-1	.204,-1	.140,-1	.248,-1	-.816,-2	-.710,-2	-.773,-2
06	.913,-2	.129,-1	.144,-1	.253,-1	.167,-1	.116,-1	.250,-1	-.216,-2	.355,-3	.190,-2
07	.113,-1	.111,-1	.129,-1	.200,-1	.115,-1	.601,-2	.122,-1	-.635,-2	-.248,-2	.307,-3
08	.101,-1	.101,-1	.121,-1	.171,-1	.101,-1	.407,-2	.411,-2	-.885,-2	-.678,-2	-.246,-2
09	.780,-2	.707,-2	.883,-2	.137,-1	.687,-2	.101,-2	.354,-2	-.780,-2	-.699,-2	-.285,-2
10	.774,-2	.693,-2	.708,-2	.153,-1	.479,-2	-.127,-2	.207,-2	-.331,-2	-.643,-2	-.423,-2
11	.765,-2	.845,-2	.575,-2	.836,-2	.306,-3	-.110,-3	.190,-2	-.263,-3	-.302,-2	-.116,-2
12	.804,-2	.125,-1	.672,-2	.868,-4	-.518,-3	.154,-2	.394,-2	-.256,-2	-.365,-2	.563,-3
13	.632,-2	.949,-2	.595,-2	-.211,-2	-.663,-3	.885,-3	.521,-2	-.494,-2	-.287,-2	.152,-3
14	.385,-2	.515,-2	.232,-2	-.266,-2	-.116,-2	-.701,-3	.274,-2	-.197,-2	.126,-2	-.136,-2
15	.707,-2	.551,-2	.405,-2	-.263,-2	.141,-2	.170,-3	-.414,-3	.777,-4	.968,-3	-.462,-3
16	.819,-2	.647,-2	.485,-2	-.231,-2	.261,-2	.365,-2	.168,-4	-.170,-2	-.299,-2	-.132,-2
17	.817,-2	.102,-1	.556,-2	-.428,-2	.209,-2	.544,-2	-.775,-3	-.315,-2	-.191,-2	.910,-3
18	.822,-2	.107,-1	.622,-2	-.495,-2	.227,-2	.408,-2	-.201,-2	-.509,-3	.636,-3	.295,-2
19	.700,-2	.947,-2	.560,-2	-.554,-2	-.296,-3	.155,-2	-.110,-2	.665,-3	.171,-2	.306,-2
20	.437,-2	.476,-2	.250,-2	-.232,-2	-.106,-2	.168,-3	.571,-3	.793,-3	.461,-3	.268,-2
21	.536,-2	.411,-2	.220,-2	.156,-2	.153,-2	.302,-3	.209,-2	.504,-4	.134,-2	.159,-2
22	.765,-2	.587,-2	.298,-2	.223,-2	.260,-2	.139,-2	.116,-2	-.165,-2	.284,-2	.116,-2
23	.728,-2	.447,-2	.247,-2	.175,-3	.600,-3	.123,-2	.986,-3	-.227,-3	.425,-2	.200,-2
24	.621,-2	.393,-2	.294,-3	-.595,-3	-.667,-3	-.237,-3	.155,-2	.176,-2	.204,-2	.866,-3
25	.456,-2	.370,-2	-.903,-3	.270,-3	-.975,-3	-.341,-3	.174,-2	.312,-2	-.195,-2	.516,-3
26	.376,-2	.201,-2	.691,-4	.537,-3	-.134,-2	.375,-3	-.149,-3	.243,-2	-.178,-2	-.172,-3
27	.493,-2	.263,-2	.134,-2	-.149,-2	-.241,-2	.870,-3	-.216,-2	.278,-3	-.464,-3	-.283,-3
28	.468,-2	.295.	.405,-3	-.578,-3	-.209,-2	.700,-4	-.201,-2	-.668,-3	-.279,-4	-.849,-3
29	.361,-2	.254,-2	-.873,-3	.344,-3	.432,-3	-.106,-2	-.163,-2	-.128,-2	.649,-3	.153,-3
30	.291,-2	.191,-2	-.509,-3	.664,-5	.143,-2	-.131,-2	-.669,-3	-.430,-3	.804,-3	.196,-3
31	.273,-2	.137,-2	-.334,-3	.445,-3	.823,-3	-.473,-3	-.455,-3	.312,-3	.284,-3	-.559,-3
32	.258,-2	.100,-3	-.894,-3	.130,-3	.124,-2	-.332,-4	-.173,-3	-.295,-3	.573,-3	-.561,-3
33	.200,-2	.122,-2	-.974,-3	-.212,-3	.153,-2	.493,-3	-.393,-3	-.347,-3	.113,-2	.113,-3
34	.138,-2	.157,-2	-.134,-2	.482,-3	.521,-3	-.203,-5	-.976,-3	-.190,-5	.113,-2	-.720,-4
35	.158,-2	.640,-3	-.908,-3	.126,-3	-.761,-3	.631,-3	-.875,-3	-.224,-3	.590,-3	-.152,-3
36	.211,-2	.262,-3	-.465,-3	-.149,-2	-.685,-3	.347,-3	-.118,-2	-.126,-3	-.251,-3	-.268,-3
37	.232,-2	-.483,-4	-.723,-3	-.173,-2	.522,-3	-.853,-3	-.525,-3	.180,-3	-.213,-3	-.865,-3
38	.233,-2	-.958,-4	-.150,-2	-.995,-3	.277,-3	-.143,-2	-.257,-3	-.846,-3	.954,-3	-.148,-3
39	.176,-2	.398,-3	-.766,-3	-.491,-3	-.753,-3	-.800,-3	-.983,-3	-.810,-3	.178,-2	.337,-3
40	.153,-2	.824,-3	.555,-4	.150,-3	-.638,-3	-.600,-4	-.113,-2	.126,-2	.792,-3	.163,-3
41	.214,-2	.647,-3	-.701,-3	.329,-4	-.336,-3	.385,-3	-.553,-4	.160,-2	-.204,-3	-.821,-4
42	.211,-2	-.891,-5	-.950,-3	-.416,-3	-.114,-3	.889,-4	.705,-3	.892,-3	.110,-3	-.565,-3
43	.106,-2	-.517,-3	.289,-3	-.354,-3	.801,-3	-.652,-3	.618,-3	.109,-2	.236,-4	-.857,-3
44	.258,-3	-.938,-3	.882,-3	-.771,-3	.463,-3	-.524,-3	.176,-3	.901,-3	-.776,-3	-.698,-3
45	.489,-3	-.907,-3	.730,-3	-.470,-3	-.408,-3	.320,-3	.463,-3	-.121,-3	-.896,-3	-.635,-4
46	.791,-3	-.913,-3	.187,-3	.153,-3	-.201,-3	.104,-2	-.860,-4	-.296,-3	.338,-4	.233,-4
47	.713,-3	-.112,-2	-.177,-3	.127,-3	.942,-4	.672,-3	.483,-3	.174,-3	.947,-3	.605,-5
48	.435,-3	-.931,-3	-.130,-3	.373,-3	.276,-3	-.351,-3	.120,-2	.332,-3	.506,-3	.172,-4
49	.515,-3	-.612,-3	-.133,-3	.781,-3	.377,-3	-.556,-3	.983,-3	.260,-3	.345,-3	-.750,-4
50	.123,-2	-.562,-3	-.223,-3	.997,-3	-.168,-3	.862,-3	.460,-3	.411,-3	.241,-3	-.613,-4
51	.203,-2	-.309,-3	-.601,-3	-.122,-3	-.329,-3	.617,-3	.554,-3	.458,-3	-.117,-3	-.194,-3
52	.144,-2	-.555,-3	-.430,-3	-.112,-2	-.191,-3	-.505,-3	.323,-3	-.389,-3	-.300,-5	-.435,-3
53	.374,-3	-.545,-3	.117,-3	-.135,-2	.339,-3	-.914,-3	.628,-3	-.781,-3	.219,-3	.910,-4
54	.283,-3	.124,-3	-.139,-3	-.366,-3	.891,-3	-.675,-3	.354,-3	-.539,-3	-.103,-3	.515,-3
55	.770,-3	.431,-3	-.487,-3	.350,-4	.111,-2	.850,-4	.230,-3	-.481,-3	-.312,-3	.858,-3
56	.112,-2	.778,-3	-.390,-3	.341,-3	.138,-2	-.476,-3	-.354,-3	.536,-4	-.830,-4	.492,-3
57	.106,-2	.444,-3	-.290,-3	-.150,-3	.787,-3	-.134,-2	-.885,-4	.112,-3	.121,-3	-.260,-3
58	.534,-3	.119,-3	-.341,-3	-.180,-3	.439,-3	-.117,-2	.764,-3	-.289,-3	.121,-3	-.508,-3
59	.267,-3	.282,-3	-.603,-3	.346,-3	.927,-4	-.296,-3	.330,-3	.200,-3	.139,-3	-.513,-3
60	.000	.000	.000	.000	.000	.000	.000	-.000	.000	.000

Run No. 21 ; v component

Separation Distance (m.)

N	6	12	18	24	36	42	48	72	84	90
00	.000	.000	.000	.000	.000	.000	.000	.000	.000	.000
01	-.239,-2	.353,-2	.223,-2	.500,-3	.343,-2	.144,-2	.307,-2	.641,-4	.180,-2	.645,-3
02	.608,-3	.302,-2	.423,-2	.530,-2	.792,-2	.747,-2	.691,-2	.677,-2	.776,-2	.545,-2
03	.391,-2	.397,-2	.768,-2	.663,-2	.956,-2	.100,-1	.874,-2	.814,-2	.804,-2	.662,-2
04	.459,-2	.534,-2	.959,-2	.675,-2	.914,-2	.107,-1	.724,-2	.528,-2	.305,-2	.193,-2
05	.466,-2	.515,-2	.105,-1	.940,-2	.914,-2	.103,-1	.600,-2	.309,-2	.196,-2	.190,-2
06	.531,-2	.495,-2	.941,-2	.845,-2	.704,-2	.698,-2	.353,-2	.133,-2	.606,-3	.191,-2
07	.679,-2	.576,-2	.814,-2	.732,-2	.665,-2	.457,-2	.158,-2	-.550,-3	-.130,-2	-.444,-3
08	.598,-2	.572,-2	.869,-2	.775,-2	.677,-2	.523,-2	-.304,-3	-.164,-2	-.164,-2	-.123,-2
09	.426,-2	.332,-2	.626,-2	.662,-2	.450,-2	.311,-2	-.376,-3	-.118,-2	.227,-3	.623,-3
10	.441,-2	.384,-2	.603,-2	.563,-2	.338,-2	.159,-2	-.232,-3	.555,-3	.377,-3	.175,-3
11	.315,-2	.545,-2	.551,-2	.510,-2	.241,-2	.204,-2	-.596,-4	.229,-2	-.798,-3	-.139,-2
12	.215,-2	.512,-2	.389,-2	.359,-2	-.133,-2	-.609,-3	-.895,-3	.170,-2	-.851,-3	-.115,-2
13	.438,-2	.569,-2	.515,-2	.338,-2	-.176,-2	-.271,-2	.314,-3	.894,-3	-.143,-3	-.476,-3
14	.563,-2	.526,-2	.466,-2	.214,-2	-.131,-2	-.266,-2	-.561,-3	.400,-3	.427,-3	.299,-3
15	.413,-2	.315,-2	.182,-2	-.374,-3	-.888,-3	-.131,-2	-.106,-2	-.291,-3	-.255,-3	-.352,-4
16	.303,-2	.194,-2	.695,-3	-.278,-3	-.185,-2	-.132,-2	.179,-3	-.555,-3	-.768,-3	-.276,-3
17	.269,-2	.268,-2	.573,-3	.856,-4	-.259,-2	-.141,-2	.115,-2	-.118,-2	-.255,-3	-.547,-3
18	.253,-2	.330,-2	-.222,-3	.510,-3	-.308,-2	-.144,-2	.593,-3	-.111,-2	-.323,-3	-.131,-2
19	.355,-2	.297,-2	.137,-3	.244,-3	-.185,-2	-.850,-3	-.182,-3	.527,-3	-.112,-2	-.108,-2
20	.359,-2	.326,-2	.971,-3	.401,-3	-.180,-2	-.159,-2	.523,-3	.137,-2	-.108,-2	-.368,-3
21	.239,-2	.385,-2	.176,-2	.649,-3	-.149,-2	-.111,-2	.197,-2	.121,-2	-.204,-2	-.492,-3
22	.230,-2	.371,-2	.154,-2	-.339,-3	-.658,-3	-.165,-3	.299,-2	.392,-3	-.156,-2	-.503,-3
23	.345,-2	.374,-2	.151,-2	-.699,-3	-.329,-3	-.571,-3	.344,-3	.331,-3	.718,-3	.964,-5
24	.447,-2	.305,-2	.102,-2	-.429,-3	-.959,-3	-.110,-2	-.494,-3	.130,-3	.619,-3	.300,-3
25	.329,-2	.112,-2	-.241,-3	.373,-3	-.157,-2	-.934,-4	-.296,-3	.760,-3	-.445,-3	.215,-3
26	.231,-2	-.232,-3	-.443,-3	.100,-3	-.184,-2	-.162,-3	-.933,-3	.721,-3	-.577,-3	-.685,-3
27	.291,-2	.205,-3	-.360,-3	-.852,-3	-.606,-3	-.102,-2	-.120,-2	-.137,-3	.332,-4	-.561,-3
28	.303,-2	.908,-4	-.363,-3	-.796,-3	.111,-2	-.565,-3	-.893,-3	-.869,-3	-.545,-4	.869,-4
29	.233,-2	-.775,-3	.311,-3	-.894,-3	.144,-2	.110,-3	-.183,-3	-.912,-3	-.574,-3	.494,-3
30	.180,-2	-.227,-3	.621,-3	.466,-4	.111,-2	-.162,-4	.378,-3	-.693,-3	-.102,-2	.411,-3
31	.199,-2	.902,-3	-.351,-3	.307,-3	.380,-3	.208,-4	.429,-3	-.321,-3	-.106,-2	.923,-3
32	.258,-2	.142,-3	-.121,-2	.455,-3	-.447,-3	.180,-3	-.115,-3	.499,-3	-.655,-3	.276,-3
33	.192,-2	.155,-3	-.556,-3	.258,-3	-.752,-3	.818,-3	.653,-4	.250,-3	-.213,-4	-.231,-3
34	.118,-2	.140,-3	.199,-4	.544,-3	-.336,-3	.917,-3	.305,-3	-.323,-3	-.424,-4	.988,-5
35	.858,-3	.733,-3	.590,-4	-.684,-4	-.200,-3	.532,-3	.460,-3	.720,-3	.931,-5	-.190,-3
36	.912,-3	.106,-2	.565,-4	-.351,-3	.721,-4	.993,-4	-.216,-3	.106,-2	.832,-4	-.907,-3
37	.207,-2	.733,-3	-.597,-4	.103,-3	-.299,-3	-.689,-4	-.357,-4	.133,-3	.497,-3	-.103,-2
38	.260,-2	.495,-3	-.339,-4	.488,-3	-.231,-3	-.387,-3	-.440,-3	.936,-4	-.148,-3	-.795,-3
39	.151,-2	.490,-3	.458,-3	.872,-3	.127,-3	-.266,-3	-.342,-3	.200,-3	-.372,-3	-.414,-3
40	.136,-2	.277,-3	.756,-3	.107,-2	.141,-3	-.434,-3	.347,-3	-.263,-3	.404,-3	-.100,-2
41	.129,-2	-.207,-3	-.600,-5	.411,-3	-.315,-3	-.827,-4	.272,-3	-.226,-3	.445,-3	-.808,-3
42	.576,-3	-.980,-3	-.454,-3	.491,-3	-.607,-3	.727,-3	-.449,-3	-.626,-3	.387,-3	-.281,-3
43	-.374,-4	-.842,-3	-.790,-3	.139,-2	-.214,-3	.601,-3	-.773,-3	-.578,-3	.208,-3	.290,-3
44	.327,-3	.448,-3	-.152,-2	.111,-2	-.679,-3	.648,-3	-.791,-3	-.115,-4	-.445,-3	-.630,-4
45	.581,-3	.104,-2	-.660,-3	.419,-3	-.758,-3	.518,-3	-.223,-4	.183,-3	-.442,-3	.109,-3
46	.385,-3	.705,-3	-.279,-3	.455,-3	-.527,-3	-.145,-3	-.112,-3	.125,-3	.229,-5	.530,-3
47	.615,-3	.552,-3	-.426,-3	.587,-3	-.956,-3	-.166,-3	.169,-3	.644,-3	.615,-4	-.186,-3
48	.522,-3	.303,-3	-.192,-3	.409,-3	-.619,-3	-.384,-3	.933,-3	.749,-3	-.263,-4	-.479,-3
49	.422,-3	.817,-4	.112,-3	-.248,-3	.847,-4	-.416,-3	.127,-2	.115,-3	-.508,-4	.383,-3
50	.697,-3	.129,-3	-.317,-3	.197,-4	-.423,-3	-.156,-3	.568,-3	.164,-3	-.115,-3	-.702,-4
51	.953,-3	.217,-3	-.470,-3	.615,-3	-.255,-3	-.337,-3	.429,-4	.354,-3	-.228,-4	-.756,-3
52	.802,-3	-.691,-3	-.170,-3	.331,-3	.742,-3	-.973,-3	.215,-3	-.520,-3	-.129,-3	-.297,-3
53	.418,-4	-.117,-2	.301,-3	-.489,-3	.115,-2	-.774,-3	.105,-3	-.208,-3	-.910,-3	.214,-3
54	-.271,-4	-.101,-2	-.191,-3	-.826,-3	.258,-3	-.434,-4	-.230,-3	.771.-3	-.648,-3	-.572,-3
55	-.529,-3	.104,-3	-.653,-3	-.984,-3	-.133,-3	-.369,-3	.114,-3	.607,-3	-.809,-3	-.129,-3
56	-.197,-3	.775,-3	-.227,-3	-.501,-3	.423,-3	-.603,-3	.372,-3	-.430,-4	-.142,-2	-.148,-3
57	.920,-3	.471,-3	.285,-3	.164,-3	-.400,-3	.116,-3	.572,-3	-.181,-3	-.430,-3	.196,-3
58	.575,-3	.195,-3	-.501,-5	.365,-3	-.732,-3	.468,-3	.328,-3	-.364,-3	.716,-3	-.550,-3
59	.221,-3	.626,-3	-.394,-3	-.996,-4	-.609,-6	.166,-3	-.399,-3	-.534,-3	.414,-3	-.214,-3
60	.000	.000	.000	.000	.000	.000	.000	.000	.000	.000

Run No. 21 ; w component

N	Separation Distance (m.)									
	6	12	18	24	36	42	48	72	84	90
00	.000	.000	.000	.000	.000	.000	.000	.000	.000	.000
01	-.829,-3	.133,-4	.205,-3	.671,-3	.697,-3	-.273,-3	-.311,-3	-.528,-3	-.985,-3	-.177,-2
02	-.868,-3	.399,-3	.452,-3	.471,-3	.309,-3	-.145,-3	-.585,-3	-.790,-3	.192,-3	-.759,-3
03	-.355,-3	.280,-3	.530,-3	.795,-3	-.757,-4	-.124,-3	-.446,-3	-.684,-3	.120,-2	.339,-3
04	-.688,-3	-.119,-2	.426,-3	.603,-3	-.258,-3	.119,-4	-.797,-4	-.527,-4	.757,-3	-.528,-4
05	-.807,-3	-.132,-2	-.247,-3	.253,-4	.151,-3	.505,-3	-.156,-3	.580,-3	-.166,-3	.212,-3
06	.197,-3	-.552,-3	-.665,-3	.120,-3	.599,-3	.726,-3	.117,-3	.631,-3	.331,-4	.485,-3
07	.436,-3	-.624,-3	.147,-3	-.496,-3	.770,-3	.398,-3	.547,-3	.429,-4	-.831,-4	-.111,-4
08	.325,-3	.743,-4	.483,-3	-.115,-2	.255,-3	.207,-4	.267,-3	-.700,-3	-.110,-2	-.795,-3
09	.939,-3	.410,-3	.508,-3	-.587,-3	-.980,-3	-.458,-3	.264,-3	-.504,-3	-.816,-3	-.119,-2
10	.931,-3	.234,-3	.773,-3	.514,-3	-.792,-3	-.688,-3	.424,-3	.526,-3	.444,-4	-.103,-2
11	.176,-3	.659,-4	.796,-3	.292,-3	.432,-4	-.170,-3	.664,-3	.450,-3	-.265,-4	-.104,-2
12	.241,-4	.499,-3	.103,-2	-.534,-3	.715,-3	.249,-3	.416,-3	-.120,-3	-.212,-4	-.834,-3
13	.563,-3	.105,-2	.128,-2	-.491,-3	.974,-3	.975,-3	.359,-4	-.214,-3	.502,-3	-.431,-3
14	.132,-2	.920,-3	.767,-3	.227,-3	.107,-2	.115,-2	-.931,-4	.332,-3	.427,-3	-.421,-3
15	.195,-2	.532,-3	.166,-2	.690,-3	.522,-3	.168,-3	.491,-3	-.102,-3	.482,-3	.184,-3
16	.197,-2	.478,-3	.690,-3	.419,-3	.576,-3	-.473,-3	.450,-3	-.461,-3	.739,-3	.852,-3
17	.106,-2	.216,-3	-.642,-3	-.153,-3	.885,-3	-.860,-3	.423,-3	-.359,-3	.333,-3	.486,-3
18	.797,-3	.210,-3	.596,-3	-.402,-3	.654,-3	-.609,-3	.307,-3	-.478,-4	-.382,-4	.113,-3
19	.102,-2	.211,-3	.696,-3	-.483,-3	-.145,-3	-.120,-2	-.603,-3	-.152,-3	.336,-3	-.116,-3
20	.878,-3	.381,-3	.361,-3	.151,-5	-.351,-3	-.828,-3	-.769,-3	-.216,-3	.140,-3	.284,-3
21	.104,-2	.533,-3	.307,-3	.116,-3	-.205,-3	-.580,-3	-.727,-4	-.187,-3	-.202,-3	.352,-3
22	.711,-3	.350,-3	.420,-3	-.281,-4	-.146,-3	-.202,-4	.657,-3	-.510,-3	-.615,-3	.324,-3
23	.209,-3	.769,-4	-.205,-4	-.155,-3	.786,-4	-.168,-3	.467,-3	-.274,-3	-.104,-2	.109,-3
24	.162,-3	.177,-4	-.843,-3	.282,-4	.290,-3	-.429,-3	.452,-4	.374,-3	-.899,-3	-.773,-4
25	.930,-3	-.789,-3	-.919,-3	.163,-4	.195,-4	-.271,-4	-.231,-3	.734,-3	-.264,-3	-.295,-3
26	.988,-3	-.560,-3	-.741,-4	-.197,-3	.425,-3	.572,-3	.486,-3	.665,-3	-.138,-3	-.600,-3
27	.113,-2	.296,-3	.380,-3	-.248,-3	.176,-3	.691,-3	.801,-3	.216,-3	-.110,-2	-.135,-3
28	.976,-3	-.166,-3	.316,-3	-.312,-3	-.341,-3	.870,-3	.221,-3	-.838,-5	-.943,-3	.544,-3
29	-.123,-3	-.647,-3	.575,-3	-.373,-3	.143,-5	.555,-3	.920,-4	-.642,-4	-.161,-3	.560,-3
30	-.469,-3	-.712,-3	.855,-3	-.168,-3	.305,-3	.241,-3	-.104,-3	.585,-4	.432,-3	-.647,-4
31	.746,-4	-.360,-3	.101,-3	-.243,-3	.172,-3	.222,-3	-.291,-3	.329,-3	.401,-3	-.271,-3
32	.544,-3	.361,-3	-.333,-3	-.349,-3	.311,-3	.143,-3	-.117,-3	.490,-3	-.181,-3	.802,-4
33	.106,-2	.435,-4	-.114,-3	-.229,-3	.130,-2	.224,-3	.640,-3	.201,-3	-.523,-3	-.351,-3
34	.713,-3	-.861,-3	.244,-3	-.184,-3	.105,-2	-.147,-4	.996,-3	.816,-4	.128,-3	-.462,-3
35	.204,-3	-.116,-2	.619,-3	-.417,-4	-.235,-3	.128,-3	.193,-3	-.393,-4	.457,-3	-.893,-5
36	.617,-3	-.692,-3	.372,-3	.104,-3	-.806,-3	.780,-3	-.408,-3	-.232,-5	.215,-3	.274,-3
37	.132,-2	-.186,-4	.450,-3	.823,-4	-.439,-3	.413,-3	-.521,-3	-.129,-3	.518,-3	.105,-3
38	-.857,-4	.304,-3	.103,-2	-.142,-3	-.107,-3	.187,-3	-.613,-3	-.109,-4	.298,-3	-.261,-3
39	-.111,-2	.353,-3	.645,-3	-.151,-3	.200,-3	.415,-3	-.229,-3	-.178,-3	-.114,-3	-.414,-3
40	-.406,-3	.347,-3	-.289,-3	.746,-3	.253,-4	.493,-3	.726,-4	.232,-3	-.173,-4	.851,-4
41	.192,-3	-.541,-4	-.343,-3	.896,-3	-.205,-3	.652,-3	.274,-3	.637,-4	-.396,-3	.123,-3
42	-.375,-3	-.614,-3	.435,-3	.692,-3	-.305,-3	.162,-3	.154,-4	-.485,-3	-.454,-3	-.292,-3
43	-.607,-3	-.139,-2	.139,-2	.620,-3	-.102,-3	.210,-3	-.444,-3	-.705,-3	.255,-3	-.616,-3
44	-.867,-4	-.946,-3	.105,-2	.117,-3	-.939,-4	.728,-3	-.783,-3	-.450,-3	.782,-3	-.372,-3
45	-.354,-3	-.334,-3	-.326,-4	-.327,-3	.119,-3	.604,-3	-.524,-3	-.642,-3	.591,-3	-.160,-3
46	-.262,-3	.239,-5	-.679,-3	-.566,-3	.596,-3	.673,-3	-.232,-3	-.471,-5	.170,-3	.365,-4
47	-.890,-4	.317,-3	-.691,-3	-.545,-3	.302,-3	.997,-3	-.924,-4	.184,-3	-.308,-3	.191,-3
48	.745,-3	.401,-3	-.830,-3	.820,-4	-.465,-3	.387,-3	.995,-4	.440,-4	-.132,-3	-.197,-3
49	.126,-2	-.354,-3	-.320,-3	-.649,-4	-.480,-3	-.936,-4	-.435,-4	-.582,-3	-.604,-4	-.461,-3
50	.626,-3	-.617,-3	-.440,-3	.208,-3	-.648,-3	.209,-3	-.813,-4	-.713,-3	-.256,-4	-.240,-3
51	.107,-2	-.127,-3	-.370,-3	.560,-3	-.186,-3	.758,-3	.178,-3	-.129,-3	.167,-3	-.217,-3
52	.147,-2	.187,-3	.661,-3	.254,-3	.337,-3	.802,-3	-.139,-4	.511,-3	.153,-3	-.239,-3
53	.785,-3	.853,-4	.985,-3	.424,-3	.464,-3	.858,-3	-.844,-4	.453,-3	-.193,-3	.673,-4
54	-.161,-3	-.307,-5	.641,-3	.265,-3	.447,-3	-.158,-3	.880,-4	.205,-3	-.234,-3	.367,-4
55	-.255,-3	-.269,-3	.347,-3	.104,-5	.410,-3	-.517,-3	.100,-3	.558,-3	.933,-4	-.144,-3
56	-.158,-3	-.523,-3	.223,-3	.135,-3	.323,-3	-.218,-3	.529,-4	-.709,-4	.480,-3	-.277,-4
57	.630,-3	-.116,-3	-.171,-3	-.159,-3	.907,-3	-.558,-4	.389,-3	.272,-3	.336,-3	-.100,-3
58	.624,-3	.766,-3	-.704,-3	-.222,-3	.700,-3	-.278,-3	.335,-3	-.212,-3	.952,-3	.102,-3
59	.612,-3	.975,-3	-.102,-2	.374,-3	-.253,-3	-.517,-3	.229,-3	-.660,-3	.135,-2	.336,-3
60	.000	.000	.000	.000	.000	.000	.000	.000	.000	.000

Run No. 23 ; u component

N	Separation Distance (m.) 6	12	18	24	36	42	48	72	84	90
00	.000	.000	.000	.000	.000	.000	.000	.000	.000	.000
01	-.406,-2	-.371,-1	-.107,-1	.100,-1	-.295,-1	-.639,-2	.189,-1	-.821,-2	-.541,-1	-.627,-1
02	-.960,-2	-.384,-3	-.787,-2	-.107,-1	-.312,-1	-.143,-2	.296,-1	-.161,-1	-.221,-1	-.206,-1
03	-.317,-2	.706,-2	-.547,-2	-.234,-1	-.416,-1	-.129,-1	-.130,-1	-.129,-1	.218,-2	.587,-2
04	.763,-2	-.409,-3	.320,-2	-.194,-1	-.182,-1	.264,-2	-.457,-2	-.404,-2	.127,-1	.346,-2
05	.106,-1	-.147,-3	.140,-1	-.889,-2	-.477,-2	.650,-2	.188,-1	-.910,-2	.726,-2	-.902,-2
06	.504,-2	-.203,-2	.114,-1	-.137,-1	.106,-2	.170,-2	.170,-1	-.838,-2	.296,-2	-.136,-1
07	-.872,-2	.249,-2	.949,-2	-.850,-2	.781,-2	-.203,-2	-.579,-3	-.949,-2	-.490,-3	-.112,-1
08	-.167,-1	.158,-2	.922,-2	.459,-2	.779,-2	.118,-2	-.852,-3	-.969,-2	.607,-2	-.133,-2
09	-.722,-2	-.277,-2	.144,-2	.108,-1	.266,-2	.106,-2	.227,-2	-.277,-2	.591,-2	-.152,-2
10	-.180,-2	-.686,-3	-.946,-3	.621,-2	.782,-2	.384,-2	-.473,-2	.283,-2	.371,-2	-.677,-3
11	-.220,-2	-.183,-2	.378,-2	-.204,-2	.667,-2	-.737,-3	-.360,-2	.209,-2	.415,-2	.121,-2
12	-.120,-2	-.540,-3	.554,-2	-.128,-2	.419,-2	-.150,-2	.414,-2	.483,-2	-.508,-3	-.196,-2
13	-.160,-2	.486,-3	.174,-2	.934,-3	-.103,-2	-.437,-3	-.529,-3	.236,-2	-.591,-2	-.464,-2
14	-.171,-2	.238,-2	-.827,-3	.403,-3	-.236,-2	-.992,-4	-.201,-2	.281,-2	-.251,-2	-.487,-2
15	.180,-2	.252,-2	-.277,-2	-.459,-3	-.689,-2	-.201,-2	-.556,-2	.515,-2	.590,-2	-.424,-2
16	.506,-2	.251,-2	-.313,-2	.881,-4	-.423,-2	-.403,-2	-.617,-2	.486,-2	.415,-2	.498,-4
17	.490,-2	.595,-3	.110,-3	.462,-4	.305,-3	-.292,-2	-.148,-2	.334,-2	.506,-3	.588,-2
18	.106,-2	.869,-3	-.225,-3	.234,-3	.278,-2	-.123,-2	.215,-2	.285,-2	.498,-3	.437,-2
19	-.124,-2	.297,-2	-.553,-3	.183,-2	-.397,-3	-.393,-3	.390,-2	.173,-2	-.529,-3	.918,-3
20	-.912,-3	.187,-2	-.363,-4	-.419,-3	-.201,-2	.430,-2	.397,-2	.126,-2	-.389,-2	-.325,-3
21	-.922,-3	.232,-2	.592,-3	-.245,-2	.103,-2	.438,-2	.346,-2	.321,-3	.133,-2	-.861,-3
22	-.356,-2	.300,-2	.139,-2	-.187,-2	.502,-2	.557,-3	.209,-2	-.177,-3	.182,-2	-.925,-3
23	-.225,-2	.197,-2	.683,-3	.971,-4	.378,-2	-.269,-2	.216,-3	.704,-3	-.152,-2	-.189,-2
24	-.137,-2	.127,-2	-.121,-2	.498,-3	.804,-3	-.232,-2	-.306,-3	.908,-3	-.801,-3	-.219,-2
25	-.112,-2	.553,-3	-.143,-2	.706,-3	.873,-3	-.125,-2	-.785,-3	.721,-3	.168,-3	-.117,-2
26	-.418,-3	-.985,-4	-.513,-2	.127,-3	.128,-2	.863,-3	-.349,-3	-.915,-4	-.181,-3	.135,-2
27	.405,-3	-.600,-3	-.179,-3	-.122,-4	.112,-2	.229,-2	-.957,-3	-.479,-3	.338,-3	.571,-3
28	.379,-3	-.766,-3	.149,-3	-.809,-3	.131,-2	.201,-2	-.156,-2	-.880,-3	.185,-2	-.910,-3
29	-.563,-3	-.649,-4	.186,-2	-.136,-2	.310,-3	-.329,-3	-.246,-3	-.802,-3	.927,-3	-.181,-2
30	.771,-3	.107,-2	.601,-3	.798,-3	-.802,-3	-.507,-3	.692,-3	-.574,-4	-.915,-3	.103,-2
31	.243,-2	.384,-3	-.112,-2	.211,-2	-.201,-2	-.584,-4	.194,-2	.527,-3	-.143,-2	.175,-2
32	.181,-2	-.394,-3	-.333,-4	.806,-3	-.123,-2	.661,-3	.191,-2	.110,-2	-.186,-2	.163,-2
33	.192,-2	-.587,-3	.661,-3	-.484,-3	-.708,-3	-.568,-3	.160,-2	.116,-2	-.161,-2	.131,-2
34	.151,-2	-.500,-3	.974,-3	.553,-3	.658,-3	.294,-3	.200,-2	.112,-2	.635,-3	.186,-3
35	.931,-3	-.604,-3	.635,-3	.212,-3	.959,-3	.464,-3	.811,-3	.121,-3	.111,-2	-.438,-3
36	-.148,-3	-.346,-3	.278,-3	-.106,-3	.840,-3	-.272,-3	.498,-3	.104,-3	.781,-3	.161,-3
37	-.514,-3	.697,-3	.221,-2	.110,-3	.461,-3	-.133,-2	.429,-3	-.406,-3	.705,-3	-.215,-3
38	-.654,-3	.770,-3	.197,-2	-.174,-3	.469,-3	-.990,-3	-.526,-3	-.961,-3	.127,-2	.226,-3
39	.599,-3	-.453,-3	-.142,-3	-.201,-3	-.148,-3	-.576,-4	-.345,-4	-.343,-4	-.809,-4	.280,-3
40	.635,-3	-.125,-2	-.232,-4	.127,-3	-.537,-3	.743,-3	.545,-3	-.476,-3	-.630,-3	.242,-3
41	-.116,-3	-.654,-3	.378,-3	.288,-3	.360,-3	.672,-3	.800,-3	-.157,-2	-.245,-3	-.334,-3
42	.303,-3	-.339,-3	.992,-3	.925,-4	.853,-3	.597,-3	.849,-3	-.151,-2	.658,-3	-.610,-3
43	.474,-3	-.419,-3	.480,-3	-.469,-4	.218,-3	-.569,-3	.377,-3	-.862,-3	.126,-3	-.964,-3
44	.218,-3	-.266,-3	.609,-4	.517,-3	-.100,-2	-.677,-3	.603,-4	-.100,-2	-.200,-3	-.825,-4
45	.659,-3	-.510,-3	.274,-3	.685,-3	-.453,-3	.382,-3	-.573,-3	.544,-4	.218,-3	.180,-4
46	.111,-2	-.352,-3	-.257,-3	-.954,-5	.318,-3	.976,-3	-.635,-4	.116,-2	.286,-3	.268,-3
47	.103,-2	.254,-3	-.175,-3	.224,-3	.346,-3	.131,-2	.895,-3	.320,-3	-.592,-3	.114,-3
48	.690,-3	.290,-3	-.586,-4	.456,-3	.132,-2	.815,-3	.777,-4	-.280,-3	-.486,-3	-.169,-4
49	.352,-3	.844,-4	-.743,-3	-.175,-3	.112,-2	-.793,-3	-.484,-3	.165,-3	-.537,-3	-.270,-3
50	.471,-3	-.407,-4	-.740,-3	-.217,-3	.927,-4	-.127,-2	.490,-3	.648,-3	-.238,-3	-.217,-3
51	.484,-3	.586,-4	.160,-3	.694,-4	-.797,-3	-.400,-3	.254,-3	.524,-3	-.765,-4	-.105,-3
52	-.184,-3	.141,-3	.867,-3	-.258,-4	-.840,-3	.310,-3	-.289,-3	.306,-3	.208,-3	.701,-3
53	.101,-3	.628,-3	.690,-3	.414,-3	-.774,-3	-.599,-3	-.351,-4	.386,-3	-.116,-3	.713,-3
54	.161,-3	.947,-3	-.166,-4	.393,-4	-.395,-3	-.799,-3	-.150,-3	.613,-3	-.107,-2	.711,-3
55	-.195,-3	.347,-3	-.115,-3	-.271,-3	.947,-5	-.561,-3	-.229,-3	.368,-3	-.692,-3	.327,-3
56	-.748,-4	.246,-3	.415,-3	-.196,-3	.442,-3	-.486,-3	-.373,-3	.174,-3	-.216,-3	.129,-3
57	.142,-3	.483,-3	.465,-3	-.401,-3	.432,-3	-.356,-3	-.840,-3	.859,-3	-.282,-4	.301,-3
58	-.266,-3	.818,-3	.957,-4	.240,-3	.296,-3	.763,-3	-.146,-2	.850,-3	.661,-3	.724,-3
59	-.634,-3	.534,-3	-.301,-3	.459,-3	.314,-3	.120,-2	-.332,-3	.252,-3	.150,-2	.102,-2
60	.000	.000	.000	.000	.000	.000	.000	.000	.000	.000

Run No. 23 ; v component

Separation Distance (m.)

N	6	12	18	24	36	42	48	72	84	90
00	.000	.000	.000	.000	.000	.000	.000	.000	.000	.000
01	-.436,-2	-.425,-2	-.550,-2	.896,-2	-.378,-2	-.426,-2	-.473,-2	-.146,-2	-.625,-4	.267,-2
02	-.521,-2	-.483,-2	-.607,-2	.506,-2	-.460,-2	-.428,-3	-.724,-2	-.184,-2	-.204,-2	.308,-2
03	.102,-2	-.574,-2	-.439,-2	-.516,-3	-.340,-2	.255,-2	.142,-2	-.784,-3	.182,-2	.613,-2
04	.300,-3	-.413,-2	-.534,-2	-.169,-2	-.224,-2	.343,-3	.221,-2	.826,-3	.496,-2	.479,-2
05	-.273,-2	-.293,-2	-.535,-2	-.559,-3	-.161,-3	.389,-2	-.176,-2	.315,-2	.388,-2	.279,-2
06	-.231,-2	-.443,-2	-.277,-2	-.324,-2	-.209,-2	.327,-2	-.133,-2	.201,-2	.213,-2	.245,-2
07	-.224,-2	-.385,-2	-.174,-2	-.276,-2	-.323,-2	.651,-3	-.307,-3	.102,-2	.119,-3	.258,-3
08	-.348,-2	-.227,-2	-.235,-3	-.172,-2	.144,-3	.210,-2	.182,-2	-.693,-4	-.119,-2	-.144,-2
09	-.146,-2	-.142,-2	.873,-3	.162,-3	.299,-2	.290,-2	.281,-2	.668,-3	-.172,-3	-.654,-3
10	-.209,-3	-.290,-2	-.170,-2	.239,-2	.279,-2	.129,-2	.223,-2	.205,-2	.693,-4	.628,-3
11	-.109,-2	-.384,-2	-.278,-2	.978,-3	-.262,-3	-.108,-2	.238,-2	.759,-3	-.241,-3	-.471,-3
12	-.194,-2	-.365,-2	-.232,-2	-.138,-2	-.655,-3	-.228,-2	.341,-3	-.404,-3	.172,-2	-.226,-2
13	-.200,-2	-.116,-2	.234,-3	-.320,-2	.587,-3	-.134,-2	-.134,-2	-.142,-2	.224,-2	-.105,-2
14	-.215,-2	-.980,-3	-.595,-3	-.373,-2	.147,-2	.134,-2	-.258,-2	-.108,-2	.836,-3	-.203,-3
15	-.282,-2	-.178,-2	-.913,-3	-.297,-2	.999,-3	.222,-2	-.345,-2	-.124,-2	-.272,-3	.423,-3
16	-.318,-2	-.163,-2	-.129,-3	-.110,-2	-.764,-3	-.506,-3	-.315,-2	.337,-3	-.103,-2	.428,-3
17	-.125,-2	-.157,-2	.949,-3	.645,-3	-.134,-2	-.202,-2	-.165,-2	-.193,-3	.506,-3	.540,-3
18	.130,-3	-.126,-2	.132,-2	.648,-3	-.291,-3	-.152,-2	-.240,-3	.410,-2	.111,-2	.698,-3
19	-.733,-3	.773,-3	.195,-2	.431,-3	-.553,-3	-.913,-3	.584,-3	-.706,-3	.598,-3	-.336,-3
20	-.102,-2	.792,-3	.207,-2	.109,-3	-.117,-2	-.663,-3	.114,-4	.138,-2	-.433,-3	.161,-3
21	.298,-3	.343,-3	.201,-2	-.207,-3	-.659,-3	.442,-3	-.596,-6	.723,-3	-.992,-3	.105,-2
22	-.252,-3	.326,-4	.534,-3	.669,-4	.543,-3	.650,-3	.890,-3	-.588,-3	-.689,-4	.667,-3
23	-.110,-2	.862,-3	-.753,-3	.585,-3	.961,-3	.951,-3	.113,-2	-.289,-3	-.128,-3	.201,-2
24	-.122,-2	.269,-3	-.445,-3	.243,-3	.654,-3	.143,-2	.501,-3	.127,-2	.513,-3	.234,-2
25	-.359,-3	.949,-3	.115,-2	-.432,-3	.779,-3	.777,-3	.305,-3	.268,-2	.118,-2	.333,-3
26	-.481,-3	.913,-3	.829,-3	.657,-3	.112,-2	-.506,-3	-.658,-3	.122,-2	.333,-3	-.146,-2
27	.119,-2	-.268,-3	-.227,-3	.120,-2	-.261,-3	-.437,-3	-.452,-3	-.148,-3	-.499,-3	-.932,-3
28	-.194,-2	.724,-3	-.222,-3	.557,-3	-.106,-2	.670,-3	.459,-4	-.629,-4	-.145,-2	-.214,-3
29	-.178,-2	.127,-2	.940,-3	-.120,-3	-.614,-3	.942,-3	.504,-3	.495,-4	-.144,-2	.102,-3
30	-.138,-2	.421,-4	.909,-3	-.164,-2	.231,-4	.837,-3	.473,-3	-.523,-3	-.576,-3	-.154,-3
31	-.132,-2	-.126,-2	-.464,-4	-.175,-2	.331,-5	.133,-2	-.670,-3	-.742,-3	.429,-3	.630,-4
32	-.592,-3	-.214,-2	.123,-3	-.704,-3	-.262,-3	.901,-5	-.949,-3	-.629,-3	.119,-2	-.135,-3
33	-.138,-2	-.119,-2	.613,-3	.600,-3	-.513,-4	.189,-3	-.109,-2	-.658,-3	.946,-3	-.621,-3
34	-.339,-2	-.998,-3	-.884,-3	.816,-3	.114,-2	.450,-3	-.105,-2	.242,-3	-.231,-3	.675,-4
35	-.371,-2	-.106,-2	-.118,-2	.491,-3	.205,-2	.118,-2	-.101,-2	.362,-3	-.128,-2	.959,-3
36	-.234,-2	.400,-3	-.805,-3	.502,-3	.134,-2	.110,-2	-.186,-3	-.117,-3	-.754,-3	-.454,-3
37	-.154,-2	.165,-3	-.619,-3	-.529,-4	.216,-3	.106,-2	-.629,-4	-.498,-3	-.125,-2	-.104,-2
38	-.106,-2	-.117,-2	-.351,-4	.161,-3	.320,-3	.998,-4	-.151,-3	-.111,-3	-.772,-3	-.490,-3
39	-.118,-2	-.100,-2	.880,-3	.771,-3	.527,-3	-.428,-3	.328,-3	.476,-5	-.103,-2	.309,-4
40	-.117,-2	-.391,-3	.276,-3	-.116,-3	.361,-3	-.881,-4	.643,-3	.132,-4	-.113,-2	.247,-4
41	-.854,-3	.798,-3	.354,-4	-.426,-3	.381,-3	-.766,-3	.650,-3	-.577,-3	-.757,-3	-.124,-2
42	-.612,-4	.820,-3	.531,-3	.277,-3	.371,-3	-.705,-3	.343,-4	-.127,-2	-.104,-2	-.104,-2
43	-.389,-3	.406,-3	-.576,-4	.697,-3	-.406,-3	-.756,-4	.346,-3	-.730,-3	-.636,-3	-.533,-3
44	-.430,-3	-.143,-3	-.120,-2	.261,-3	-.372,-3	.107,-2	.751,-3	-.307,-3	.832,-4	-.371,-3
45	-.458,-3	-.936,-4	-.622,-3	-.476,-4	-.142,-3	.952,-3	.641,-3	-.765,-4	.471,-3	.519,-3
46	-.184,-2	.300,-3	.249,-3	-.302,-3	.177,-3	.178,-3	.103,-3	.269,-3	-.430,-3	.132,-2
47	-.150,-2	.308,-3	.481,-3	-.643,-4	.164,-3	.609,-3	.293,-3	.211,-3	-.907,-3	.223,-3
48	-.131,-2	-.156,-3	.239,-3	.856,-4	-.177,-2	.118,-2	-.454,-3	-.637,-3	.376,-3	-.297,-3
49	-.154,-2	-.629,-3	-.269,-3	.666,-4	-.223,-2	.747,-3	-.117,-2	-.974,-3	.145,-3	.943,-3
50	-.122,-2	.220,-3	-.106,-3	.117,-3	-.193,-3	-.125,-3	-.684,-3	-.263,-3	.278,-3	.196,-2
51	-.437,-4	.532,-4	.827,-3	.156,-3	.163,-4	.329,-3	.838,-3	.587,-4	.666,-3	.115,-2
52	.260,-3	-.318,-3	.125,-2	-.330,-4	-.651,-3	.120,-2	.109,-3	.487,-3	.382,-3	.109,-3
53	-.573,-3	.278,-3	.232,-3	-.308,-3	-.127,-2	.116,-2	-.112,-3	.979,-3	-.335,-3	.432,-3
54	-.559,-3	.622,-3	-.234,-3	[illegible]-3	-.779,-3	.946,-3	-.187,-3	.105,-2	.251,-3	-.492,-3
55	-.253,-3	.270,-3	.887,-4	-.499,-3	-.401,-3	-.252,-3	.320,-3	.387,-3	.786,-3	-.862,-3
56	-.944,-5	.705,-3	.856,-3	.871,-3	-.862,-3	-.781,-3	.122,-2	-.805,-3	-.281,-3	-.851,-3
57	.537,-4	.738,-3	.480,-3	.174,-2	-.118,-2	-.431,-3	.160,-2	-.460,-3	-.150,-4	-.806,-3
58	-.821,-4	-.779,-3	-.769,-3	.915,-3	-.695,-3	-.482,-3	.538,-3	.160,-3	.524,-4	.829,-4
59	-.565,-4	-.112,-2	-.737,-3	-.482,-3	-.504,-3	-.454,-3	-.346,-3	.276,-3	-.154,-3	-.822,-4
60	.000	.000	.000	.000	.000	.000	.000	.000	.000	.000

Run No. 24 ; u component

Separation Distance (in.)

N	6	12	18	24	36	42	48	72	84	90
00	.000	.000	.000	.000	.000	.000	.000	.000	.000	.000
01	-.171,-1	.160,-1	-.144,-1	.295,-1	-.197,-1	-.505,-1	-.525,-1	-.287,-1	-.397,-1	-.561,-1
02	.117,-1	.213,-1	.503,-2	.706,-2	-.174,-1	-.160,-1	-.620,-1	-.162,-1	-.740,-3	-.363,-1
03	.111,-1	.146,-1	.191,-2	.866,-5	-.105,-1	.478,-2	-.414,-1	.358,-2	.[illegible],-1	-.285,-2
04	-.104,-2	-.415,-3	-.202,-2	.185,-2	-.713,-2	-.829,-2	.962,-3	.612,-2	.[illegible],-2	.317,-2
05	-.143,-1	-.295,-2	.139,-2	-.892,-2	-.637,-2	-.748,-2	.909,-2	-.110,-2	-.814,-2	-.110,-2
06	-.144,-1	.249,-2	-.545,-3	-.831,-2	-.105,-1	.926,-2	.115,-1	-.108,-1	-.101,-1	-.278,-2
07	-.179,-2	.115,-2	-.248,-2	-.480,-2	-.560,-2	.137,-1	.166,-1	-.886,-2	-.731,-2	-.382,-2
08	.357,-2	.407,-2	-.835,-2	-.479,-2	-.293,-2	-.238,-3	.113,-1	-.408,-2	-.240,-2	-.314,-2
09	-.330,-3	.314,-2	-.154,-2	-.321,-2	.210,-2	-.735,-2	.218,-2	-.463,-2	.338,-3	.205,-2
10	-.963,-3	.515,-3	-.763,-3	-.497,-2	.284,-2	-.628,-2	.326,-2	-.747,-2	.656,-2	.565,-2
11	.141,-2	.311,-3	-.752,-4	-.273,-2	-.753,-3	-.383,-2	.683,-2	-.240,-2	.114,-1	.315,-2
12	.254,-2	-.597,-3	.188,-2	.235,-2	-.317,-2	-.477,-3	.359,-2	-.295,-4	.456,-2	.215,-2
13	.851,-3	-.260,-2	-.394,-3	.338,-2	-.249,-2	-.263,-2	-.402,-2	-.274,-2	-.114,-2	.237,-2
14	-.295,-2	-.213,-2	-.282,-2	.340,-2	-.458,-3	-.664,-2	-.399,-2	-.385,-3	-.242,-2	-.497,-3
15	-.572,-2	-.376,-2	-.241,-2	.135,-2	.332,-2	-.419,-2	-.120,-2	-.154,-3	-.136,-2	-.110,-2
16	-.583,-2	-.222,-2	-.179,-2	-.190,-2	.361,-2	-.549,-3	.861,-4	-.500,-2	.399,-3	-.784,-3
17	-.205,-2	-.258,-2	-.154,-2	-.169,-2	.399,-2	-.336,-2	-.821,-3	-.691,-2	.160,-2	.311,-2
18	.244,-2	-.271,-2	-.118,-2	.250,-3	.544,-2	-.183,-2	-.380,-2	-.395,-2	.142,-2	.382,-2
19	.336,-2	.614,-4	.397,-3	.226,-3	.244,-2	.155,-2	-.245,-2	-.125,-2	.212,-2	.251,-2
20	.306,-2	.200,-2	.161,-2	-.110,-2	-.302,-2	.132,-2	.791,-3	-.428,-3	.284,-2	.604,-3
21	.116,-2	-.300,-3	.807,-3	.377,-3	-.351,-2	.205,-2	-.453,-3	.130,-2	.274,-2	-.270,-3
22	.165,-3	-.210,-2	.132,-2	.201,-2	-.156,-2	.136,-2	-.281,-2	.768,-3	.688,-3	-.184,-3
23	-.119,-3	-.235,-2	.109,-2	.157,-2	-.128,-2	.114,-2	-.224,-2	-.181,-2	.221,-3	.602,-3
24	-.513,-3	-.120,-3	-.142,-2	.105,-3	.230,-3	-.112,-3	-.286,-2	-.195,-2	-.683,-4	.243,-2
25	-.195,-2	.133,-2	-.134,-2	.250,-3	.104,-2	-.565,-3	-.288,-2	-.164,-2	.105,-2	.338,-2
26	-.310,-4	.120,-2	.122,-2	-.987,-4	.168,-2	.232,-3	-.195,-2	-.178,-2	.777,-3	.253,-2
27	.830,-3	.101,-2	.278,-2	.635,-3	.190,-2	.136,-2	-.194,-2	-.205,-2	.195,-2	.273,-2
28	.380,-3	.192,-4	.105,-2	.827,-3	-.126,-3	.642,-3	-.255,-2	-.100,-2	.413,-3	.972,-3
29	-.117,-2	-.146,-2	.853,-4	-.413,-3	-.265,-3	-.139,-3	-.160,-2	-.646,-4	-.666,-3	.364,-4
30	-.111,-2	.260,-3	-.198,-3	-.157,-2	.288,-3	.840,-3	-.138,-2	-.335,-3	-.255,-3	.113,-2
31	.415,-3	.117,-2	-.512,-3	-.493,-3	.728,-3	.685,-3	-.195,-2	-.110,-2	-.128,-3	.184,-2
32	.867,-3	.129,-2	-.373,-3	.495,-3	.598,-3	-.206,-3	-.160,-2	-.985,-3	.651,-3	.214,-2
33	-.154,-3	.535,-3	-.655,-3	.123,-2	.135,-2	.910,-3	.749,-3	.113,-4	.187,-2	.200,-2
34	-.416,-3	.380,-4	-.575,-3	.726,-3	.260,-2	.736,-3	.552,-3	.978,-4	.352,-3	.123,-2
35	.684,-3	.169,-3	-.470,-3	-.245,-3	.191,-2	-.354,-3	-.122,-2	-.457,-3	-.117,-2	.158,-2
36	.424,-4	.174,-3	.445,-3	-.472,-3	.954,-3	-.306,-3	-.161,-2	-.532,-3	-.311,-2	.113,-2
37	-.342,-3	.661,-4	.495,-3	-.502,-3	.182,-2	.516,-3	-.106,-2	-.132,-3	-.166,-2	.346,-3
38	.812,-4	.361,-3	-.514,-3	-.424,-3	.168,-2	.437,-3	-.139,-2	-.828,-3	-.145,-3	-.719,-3
39	.549,-3	-.175,-3	-.486,-3	.124,-3	-.183,-3	.981,-3	-.138,-2	-.136,-2	-.747,-4	.447,-3
40	.840,-3	-.185,-3	-.260,-3	.553,-3	-.509,-3	.143,-2	.620,-4	-.160,-2	-.235,-3	.173,-2
41	-.111,-3	.716,-4	.169,-3	.435,-3	.110,-3	.140,-2	-.205,-3	-.166,-2	-.278,-4	.152,-2
42	-.931,-3	.116,-3	-.342,-3	-.144,-3	.501,-3	.490,-3	-.903,-3	-.519,-3	-.899,-4	-.691,-4
43	-.956,-3	-.200,-3	-.571,-3	.119,-3	.638,-3	-.144,-3	-.382,-3	.422,-3	-.532,-3	-.150,-2
44	-.623,-3	.150,-3	-.711,-3	.149,-3	.239,-3	-.617,-3	.817,-4	.679,-3	-.308,-3	-.813,-3
45	.965,-4	.497,-3	-.861,-3	.310,-3	-.113,-3	.109,-3	-.538,-3	.501,-3	.461,-3	.159,-3
46	.400,-3	-.217,-3	-.538,-3	.513,-4	.183,-3	.458,-3	-.887,-3	.755,-4	.881,-3	-.823,-4
47	.300,-3	-.663,-3	-.106,-3	-.220,-3	.514,-3	-.284,-3	.533,-3	.298,-3	.926,-3	-.440,-3
48	.234,-3	-.271,-3	-.226,-3	-.573,-3	.804,-4	-.345,-3	.716,-3	.144,-3	-.143,-3	-.398,-3
49	.229,-3	-.416,-3	-.560,-3	-.237,-3	-.524,-3	.663,-3	.236,-3	-.795,-4	-.622,-3	-.416,-3
50	-.206,-3	-.354,-3	-.229,-3	.154,-3	-.192,-3	.843,-3	.414,-3	.928,-5	-.350,-3	-.126,-3
51	-.311,-3	.232,-3	.326,-3	.140,-3	.552,-3	.383,-3	.811,-3	-.525,-4	.392,-3	-.715,-4
52	-.050,-4	.101,-3	.136,-3	.272,-3	.360,-3	.872,-4	-.162,-3	-.518,-4	.724,-3	.575,-3
53	-.771,-4	-.249,-3	-.126,-3	.596,-4	-.306,-3	-.249,-3	-.999,-3	-.583,-3	501,-3	.615,-3
54	-.443,-3	-.397,-3	-.182,-3	-.321,-3	-.365,-3	-.788,-4	-.328,-3	-.305,-3	-.216,-4	-.457,-3
55	-.878,-4	-.851,-3	-.183,-3	.616,-5	.214,-4	.106,-3	.162,-3	-.394,-5	-.135,-5	-.138,-2
56	.492,-3	-.629,-3	.515,-4	-.378,-3	-.218,-4	-.325,-3	-.212,-3	.237,-4	-.169,-3	-.908,-3
57	-.775,-4	-.231,-4	-.167,-3	.160,-3	-.199,-3	-.855,-3	-.340,-3	-.202,-3	.197,-3	-.194,-3
58	-.683,-3	.426,-6	.285,-3	-.300,-3	.618,-4	-.322,-3	.523,-3	-.144,-3	.754,-3	-.198,-5
59	-.488,-3	-.801,-4	.715,-3	-.530,-3	.360,-3	-.669,-4	.270,-3	.195,-3	.678,-3	-.329,-3
60	.000	.000	.000	.000	.000	.000	.000	.000	.000	.000

Run No. 24 ; v component

Separation Distance (m.)

N	6	12	18	24	36	42	48	72	84	90
00	.000	.000	.000	.000	.000	.000	.000	.000	.000	.000
01	-.161,-2	.244,-2	-.502,-3	.217,-2	.586,-3	-.575,-2	-.154,-2	.275,-2	.350,-2	.107,-3
02	.388,-2	.569,-2	.561,-2	.342,-2	.794,-2	.345,-2	-.776,-2	.366,-2	.216,-2	-.210,-2
03	.491,-2	.489,-2	.721,-2	-.206,-2	.379,-2	.256,-2	-.280,-2	-.154,-2	-.147,-2	-.308,-2
04	.114,-2	.147,-2	.159,-2	-.234,-2	-.273,-2	-.376,-2	-.212,-2	.427,-3	-.874,-3	.210,-3
05	-.557,-3	-.642,-4	-.809,-3	-.672,-3	-.625,-2	-.571,-2	-.202,-2	-.364,-3	.261,-3	-.974,-3
06	.606,-3	.118,-2	.121,-2	-.256,-2	-.577,-2	-.550,-2	.781,-3	-.107,-2	-.190,-2	-.387,-2
07	.184,-2	.102,-2	.332,-2	-.393,-2	-.213,-2	-.275,-2	.157,-2	-.622,-3	-.233,-2	-.241,-2
08	.384,-2	-.425,-3	.251,-2	-.341,-2	.646,-3	.634,-3	-.948,-3	.415,-3	.268,-3	-.131,-2
09	.461,-2	.879,-3	.317,-2	-.299,-2	-.673,-3	.370,-3	-.915,-3	.192,-2	.234,-2	-.309,-3
10	.336,-2	.129,-2	.107,-2	-.138,-2	.557,-3	-.116,-2	-.470,-3	.132,-2	.146,-2	.100,-2
11	.388,-2	.230,-2	.944,-3	.186,-3	-.125,-2	-.277,-2	.104,-3	-.166,-3	.386,-3	.201,-2
12	.240,-2	.363,-2	.189,-2	.562,-3	-.180,-2	-.239,-2	-.871,-3	.358,-3	-.170,-2	-.715,-3
13	.921,-3	.228,-2	.146,-2	-.170,-2	-.377,-3	-.601,-4	-.229,-2	.783,-3	-.101,-2	-.236,-2
14	.221,-2	-.755,-4	-.314,-3	-.168,-2	.734,-3	.853,-3	-.172,-2	-.447,-4	.536,-3	-.121,-2
15	.335,-2	-.362,-3	-.212,-2	-.526,-3	.101,-2	.867,-4	-.472,-4	.662,-3	.108,-2	.709,-4
16	.250,-2	.162,-2	-.234,-2	-.175,-2	.134,-2	-.399,-3	.972,-4	.357,-3	-.154,-3	.494,-3
17	.238,-2	.285,-2	-.850,-3	-.168,-2	.644,-3	.331,-3	.812,-3	-.177,-3	-.181,-2	-.271,-3
18	.141,-2	.183,-2	.766,-3	-.153,-2	.128,-2	.106,-2	.880,-3	.195,-4	-.224,-2	-.240,-2
19	.127,-2	.102,-2	.180,-2	-.153,-2	-.379,-5	.435,-3	-.322,-3	-.381,-3	-.921,-3	-.160,-2
20	.201,-2	.291,-4	.696,-3	-.205,-3	-.152,-2	-.200,-3	-.795,-3	-.207,-3	.234,-3	.310,-3
21	.160,-2	.465,-3	-.387,-3	-.726,-3	-.169,-2	.437,-3	-.785,-3	.948,-4	-.665,-3	.103,-2
22	.877,-3	.158,-2	.884,-4	-.145,-2	-.232,-2	.474,-3	.684,-3	.427,-3	-.147,-2	.970,-3
23	.959,-3	.283,-3	-.270,-3	-.155,-2	-.188,-2	.681,-3	.145,-2	.118,-2	-.513,-3	.121,-4
24	.941,-3	-.237,-3	-.152,-3	-.430,-3	-.158,-3	.387,-4	.984,-3	.302,-3	-.363,-3	-.697,-3
25	.288,-3	-.894,-4	.103,-3	-.278,-3	.333,-3	-.264,-3	.298,-3	-.190,-3	-.221,-3	.501,-3
26	-.135,-3	.237,-3	-.210,-4	-.809,-3	-.502,-3	-.113,-2	.914,-3	.103,-4	-.363,-3	.116,-2
27	.836,-3	-.145,-5	.487,-3	-.890,-4	-.128,-2	-.100,-2	.119,-2	-.182,-3	-.489,-3	.109,-2
28	.133,-2	-.117,-2	.129,-4	.768,-3	-.861,-4	.110,-4	-.220,-3	-.739,-4	-.721,-3	-.239,-5
29	.104,-2	-.106,-3	-.547,-3	.817,-3	.468,-3	-.109,-2	-.148,-2	.572,-4	-.965,-3	.102,-2
30	-.113,-3	.104,-2	-.763,-3	.557,-3	.198,-4	-.154,-2	-.153,-2	-.374,-3	-.532,-3	.296,-3
31	-.428,-3	.296,-3	-.563,-3	-.287,-4	-.101,-2	-.541,-3	-.530,-3	-.507,-3	.574,-3	.268,-3
32	.668,-3	-.466,-3	-.451,-3	.554,-3	-.723,-3	.887,-3	-.693,-3	-.593,-3	.981,-3	.186,-3
33	.105,-2	.137,-3	-.127,-3	.103,-2	-.618,-3	.909,-3	-.660,-3	-.477,-3	.101,-2	.283,-3
34	.163,-2	.415,-3	-.490,-3	.247,-3	-.734,-3	.755,-3	.225,-3	.469,-4	.115,-2	-.884,-4
35	.725,-3	-.476,-3	-.117,-2	-.141,-2	.122,-3	.107,-2	.242,-3	.474,-3	.104,-2	-.459,-3
36	.161,-3	-.322,-3	-.588,-5	-.155,-2	.110,-2	.220,-3	.219,-3	.903,-3	-.207,-3	-.620,-3
37	.261,-3	.253,-3	.119,-2	-.363,-4	.821,-3	-.640,-3	.110,-2	.111,-2	-.105,-3	-.406,-3
38	-.506,-4	-.274,-3	.835,-3	.230,-3	-.136,-3	-.518,-3	.140,-3	.387,-3	-.401,-4	.530,-4
39	.129,-2	-.191,-3	.744,-3	-.255,-3	-.973,-3	-.658,-3	.951,-3	-.197,-3	-.490,-3	.301,-3
40	.182,-2	-.289,-3	.620,-3	-.434,-3	-.442,-3	-.340,-3	.152,-3	-.257,-3	.855,-4	.639,-3
41	.144,-2	-.107,-2	.120,-2	.465,-4	.445,-3	.308,-3	-.286,-3	-.321,-4	.111,-2	.689,-3
42	.367,-3	-.111,-2	.166,-2	.699,-3	.157,-3	.737,-3	-.302,-3	-.261,-4	.103,-2	-.260,-3
43	-.589,-3	-.764,-3	.532,-3	.376,-3	-.528,-3	.198,-3	-.145,-3	-.571,-3	.250,-3	-.335,-3
44	-.953,-3	-.872,-3	-.168,-3	-.813,-4	-.429,-3	.290,-3	.112,-3	-.313,-3	.978,-4	-.559,-3
45	-.757,-3	-.822,-3	.413,-4	-.400,-3	-.256,-3	-.324,-3	-.511,-3	-.130,-4	-.120,-3	-.432,-3
46	-.845,-3	-.308,-3	-.149,-3	.318,-3	-.837,-4	-.463,-3	.328,-3	.207,-3	-.158,-2	.109,-3
47	-.595,-3	.736,-4	.773,-4	.699,-3	-.531,-3	-.475,-3	.833,-3	.322,-3	-.177,-2	-.231,-3
48	-.918,-3	-.427,-3	-.323,-3	.241,-3	-.465,-3	-.606,-3	.219,-3	-.933,-4	-.433,-3	.135,-3
49	-.111,-2	-.105,-2	-.405,-3	-.251,-4	.213,-5	.369,-4	.228,-3	-.235,-3	.180,-3	.630,-3
50	-.102,-3	-.311,-3	.721,-4	.192,-3	-.200,-4	.309,-4	-.435,-3	-.460,-4	.158,-3	.177,-3
51	.406,-3	.453,-3	-.316,-3	.646,-3	.428,-4	-.556,-3	-.130,-2	.179,-3	.412,-3	-.288,-3
52	.256,-3	.750,-3	-.701,-3	.328,-3	.171,-5	.881,-4	-.125,-2	-.232,-3	.302,-3	-.226,-3
53	.149,-3	.317,-3	-.364,-3	-.430,-3	-.228,-3	.114,-2	-.365,-3	-.296,-3	.135,-3	-.410,-3
54	.524,-3	-.194,-3	-.198,-3	-.315,-3	.13-,-3	.183,-2	.133,-3	-.313,-3	.538,-3	-.113,-2
55	.671,-3	-.613,-3	-.437,-3	.408,-3	.202,-3	.128,-2	-.401,-3	-.626,-4	.709,-3	-.942,-3
56	.668,-4	-.109,-2	-.359,-3	.111,-2	-.345,-3	-.449,-3	-.982,-3	-.313,-3	.147,-3	-.608,-4
57	-.309,-3	-.345,-3	-.384,-3	.101,-2	-.505,-3	-.970,-3	-.362,-3	-.646,-3	-.160,-3	.216,-3
58	-.132,-3	-.211,-3	-.532,-4	.608,-3	-.112,-2	-.642,-3	.402,-3	-.424,-3	.279,-3	.309,-3
59	-.405,-3	-.557,-3	.167,-3	.454,-3	-.102,-2	-.758,-3	.557,-3	-.318,-3	.197,-3	.515,-3
60	.000	.000	.000	.000	.000	.000	.000	.000	.000	.000

Run No. 27 ; u component

N	Separation Distance (n.)									
	6	12	18	24	36	42	48	72	84	90
00	.000	.000	.000							
01	.528,-1	-.376,-2	.250,-1							
02	.305,-1	-.152,-1	.17[illegible],-2							
03	.150,-1	-.156,-1	-.149,-1							
04	.960,-2	-.892,-2	-.933,-2							
05	-.695,-2	-.826,-2	-.137,-1							
06	-.108,-1	-.906,-2	-.913,-2							
07	-.299,-2	-.851,-2	-.755,-3							
08	.121,-2	-.326,-2	.165,-2							
09	-.432,-2	.826,-3	-.555,-3							
10	-.724,-2	-.823,-3	-.341,-3							
11	-.265,-2	-.304,-2	-.210,-2							
12	-.220,-2	-.200,-2	-.340,-2							
13	-.333,-2	-.192,-2	-.349,-3							
14	-.300,-2	-.122,-2	-.155,-2							
15	-.403,-2	.847,-4	-.116,-2							
16	-.227,-2	.530,-4	-.738,-3							
17	-.143,-2	-.837,-3	.197,-2							
18	-.111,-2	.800,-3	.115,-2							
19	-.116,-2	.318,-3	-.894,-3							
20	.724,-3	-.120,-2	.985,-3							
21	.846,-3	-.150,-2	.257,-2							
22	-.319,-3	-.182,-2	.134,-2							
23	-.267,-3	-.105,-2	-.134,-3							
24	.825,-4	-.215,-2	.101,-3							
25	-.818,-3	-.252,-2	.139,-2							
26	-.202,-2	-.100,-2	.401,-3							
27	-.119,-2	-.539,-3	-.262,-3							
28	-.323,-4	-.225,-3	.375,-3							
29	-.930,-4	.429,-3	-.678,-3							
30	.924,-3	.762,-4	-.894,-3							
31	.138,-2	-.660,-4	.389,-3							
32	-.291,-3	.781,-3	.314,-3							
33	-.104,-2	.103,-2	-.773,-4							
34	-.783,-3	-.123,-3	-.654,-4							
35	.003,-4	-.021,-3	.542,-3							
36	.024,-4	-.479,-3	.354,-3							
37	-.387,-3	.140,-3	.823,-4							
38	.200,-3	.561,-3	-.543,-3							
39	.473,-3	-.626,-3	-.746,-4							
40	.577,-3	-.552,-3	.222,-3							
41	.449,-3	-.785,-4	.974,-3							
42	.207,-3	.520,-3	.485,-3							
43	-.311,-3	.315,-3	.411,-3							
44	-.551,-3	.273,-3	.515,-3							
45	-.299,-3	.118,-3	.371,-3							
46	-.586,-4	-.440,-3	.395,-3							
47	.323,-4	-.855,-4	-.189,-3							
48	-.112,-3	.499,-3	-.707,-3							
49	.174,-3	.700,-3	.304,-3							
50	.681,-3	.479,-3	-.495,-3							
51	-.257,-3	-.325,-3	-.792,-3							
52	-.120,-3	-.131,-3	-.518,-3							
53	-.100,-3	-.202,-3	-.215,-3							
54	-.035,-3	-.358,-3	-.200,-3							
55	-.497,-3	-.148,-3	-.300,-3							
56	-.504,-3	-.673,-3	-.205,-2							
57	-.128,	-.728,-3	-.177,-2							
58	-.313,	-.284,-3	-.482,-3							
59	.350,-3	-.134,-3	.388,-3							
60	.000	.000	.000							

Run No. 27 ; v component

	Separation Distance (m.)									
N	0	12	18	24	36	42	48	72	84	90
00	.000	.000	.000							
01	.120,-1	.028,-2	.113,-1							
02	.213,-1	-.237,-1	-.002,-2							
03	.172,-1	-.129,-1	-.411,-2							
04	.851,-2	-.102,-1	-.130,-1							
05	.452,-2	-.213,-1	-.150,-1							
06	.55[illegible],-2	-.157,-1	-.524,-2							
07	.518,-2	-.407,-2	-.120,-2							
08	.[illegible],-2	-.1[illegible],-2	-.337,-2							
09	.[illegible]40,-2	.411,-2	-.304,-2							
10	.302,-2	.400,-2	-.10[illegible],-2							
11	.047,-2	.[illegible]47,-2	.426,-3							
12	.542,-2	.344,-2	.127,-2							
13	.282,-2	.299,-2	.157,-2							
14	.393,-2	.287,-3	.120,-2							
15	.258,-2	-.106,-2	.330,-3							
16	.[illegible]63,-3	-.[illegible]88,-3	.574,-3							
17	.341,-3	-.8[illegible]1,-3	.453,-3							
18	.215,-2	-.111,-2	-.123,-2							
19	.286,-2	-.335,-4	-.143,-2							
20	.[illegible]70,-2	.110,-2	-.[illegible]80,-3							
21	.102,-2	.7[illegible]4,-3	-.102,-2							
22	.[illegible]86,-2	-.[illegible]11,-3	.[illegible]45,-3							
23	.175,-2	-.[illegible]72,-3	.103,-2							
24	.[illegible]00,-3	-.[illegible]97,-3	.560,-3							
25	.403,-3	.72[illegible],-3	.727,-3							
26	.47[illegible],-3	.105,-2	-.[illegible]96,-3							
27	.445,-3	.445,-3	-.105,-2							
28	-.[illegible]90,-3	-.[illegible]06,-3	-.317,-3							
29	-.[illegible]50,-3	-.[illegible]22,-3	.559,-3							
30	-.[illegible]31,-3	-.[illegible]15,-3	.120,-2							
31	.[illegible]49,-3	-.[illegible]52,-4	.[illegible]42,-3							
32	-.785,-3	.104,-2	-.[illegible]62,-3							
33	-.232,-2	.192,-2	-.146,-2							
34	-.108,-2	.103,-2	-.314,-4							
35	.[illegible]87,-4	.57[illegible],-3	.122,-2							
36	.[illegible]35,-3	.122,-2	.[illegible]55,-3							
37	.[illegible]03,-3	.[illegible]23,-3	.535,-3							
38	.157,-2	-.[illegible]04,-4	.129,-2							
39	.[illegible]25,-3	.[illegible]55,-4	.703,-3							
40	-.[illegible]49,-3	-.[illegible]19,-4	.[illegible]96,-4							
41	-.[illegible]55,-3	-.[illegible]6[illegible],-4	.[illegible]09,-3							
42	-.[illegible]50,-3	.[illegible]42,-3	.[illegible]70,-3							
43	.[illegible]83,-3	.[illegible]70,-3	.335,-3							
44	.181,-2	.[illegible]79,-4	-.124,-3							
45	.131,-2	-.[illegible]20,-3	-.[illegible]90,-3							
46	-.[illegible]15,-3	-.1[illegible]8,-3	.172,-3							
47	-.1[illegible]0,-2	-.587,-3	.202,-3							
48	-.[illegible]9[illegible],-3	-.402,-3	.393,-3							
49	-.[illegible]78,-4	-.[illegible]84,-3	.354,-3							
50	.[illegible]47,-3	-.[illegible]75,-3	.34[illegible],-3							
51	.33[illegible],-3	-.191,-3	.533,-3							
52	-.[illegible]84,-3	-.373,-3	-.[illegible]2[illegible],-4							
53	-.[illegible]7[illegible],-3	-.540,-3	-.10[illegible],-2							
54	-.[illegible]20,-3	-.170,-3	-.[illegible]38,-3							
55	-.513,-3	.212,-3	.[illegible]53,-3							
56	-.334,-3	-.211,-3	.705,-3							
57	-.831,-4	.251,-3	-.[illegible]69,-3							
58	-.290,-3	.[illegible]66,-3	-.[illegible]57,-3							
59	.[illegible]66,-3	-.[illegible]25,-3	.741,-4							
60	.000	.000	.000							

Run No. 32 ; u component

	Separation Distance (m.)									
N	6	12	18	24	36	42	48	72	84	90
00	.000	.000	.000	.000	.000	.000	.000	.000	.000	.000
01	-.766,-3	.148,-2	-.198,-3	-.411,-3	.119,-2	.527,-3	-.652,-3	-.376,-3	.346,-3	-.662,-3
02	.614,-3	.335,-3	-.219,-3	-.486,-3	.562,-3	.461,-3	-.480,-3	.108,-3	-.159,-3	-.370,-4
03	.750,-3	-.834,-4	-.262,-3	-.108,-2	-.232,-4	-.388,-3	-.504,-3	-.271,-3	-.340,-3	.111,-3
04	.838,-3	-.141,-3	-.215,-3	-.521,-3	.269,-3	-.498,-5	-.600,-4	.166,-3	.145,-3	.362,-3
05	.104,-2	.946,-4	-.191,-3	.262,-3	.334,-3	.228,-3	.661,-3	.437,-3	.253,-3	.301,-3
06	.141,-2	.123,-3	-.462,-3	.114,-3	.151,-3	-.123,-4	.480,-3	-.132,-3	-.308,-3	.410,-3
07	.170,-2	.283,-3	-.803,-4	-.248,-3	.524,-4	-.150,-3	-.115,-3	-.229,-3	-.420,-3	.357,-3
08	.136,-2	.167,-3	.490,-3	-.113,-3	.124,-4	-.155,-3	-.342,-3	.726,-4	-.266,-3	.497,-4
09	.142,-2	-.222,-3	.527,-3	.811,-4	.590,-3	-.573,-4	-.681,-3	-.565,-4	-.523,-3	-.681,-4
10	.152,-2	-.180,-3	.222,-3	.395,-3	.738,-3	.285,-3	-.749,-3	.406,-4	-.118,-2	-.587,-4
11	.734,-3	.542,-4	.995,-4	.463,-3	.426,-4	.686,-4	-.136,-3	-.714,-4	-.870,-3	-.117,-3
12	.672,-3	-.154,-3	-.160,-3	.508,-3	-.160,-3	-.181,-3	.860,-4	-.931,-4	-.304,-3	-.434,-3
13	.705,-3	-.231,-3	-.463,-3	.490,-3	.338,-4	-.261,-3	-.297,-3	.295,-3	-.103,-3	-.588,-3
14	.499,-3	-.804,-4	-.404,-3	.143,-3	.211,-4	-.207,-3	-.257,-3	.365,-3	-.203,-3	-.253,-3
15	.367,-3	-.694,-4	.123,-3	-.243,-4	-.575,-4	-.122,-3	-.142,-3	.381,-3	-.213,-3	.677,-4
16	.448,-3	-.252,-3	.468,-3	-.139,-3	.288,-4	-.184,-3	-.239,-3	.469,-3	-.269,-3	.198,-3
17	.335,-3	-.181,-3	.370,-3	-.264,-3	-.253,-4	-.151,-3	-.546,-4	.205,-3	-.755,-4	-.139,-3
18	.475,-3	-.446,-3	.280,-3	-.432,-3	.162,-3	-.257,-3	-.637,-4	-.117,-3	.496,-4	-.395,-3
19	.477,-3	-.430,-3	.169,-3	-.241,-3	.246,-3	-.341,-3	-.379,-3	-.527,-4	-.218,-3	-.712,-4
20	.360,-3	-.153,-3	-.652,-4	.615,-4	.797,-4	-.139,-3	-.296,-3	-.130,-4	-.207,-3	-.316,-4
21	.317,-3	-.295,-4	.598,-4	.823,-4	.606,-4	.523,-4	-.820,-4	-.121,-3	.161,-4	-.220,-3
22	.131,-3	-.271,-4	.159,-3	.212,-4	.721,-4	.110,-7	.437,-4	-.109,-3	-.200,-4	-.711,-4
23	.900,-4	-.217,-3	.232,-3	.113,-4	.177,-3	-.162,-3	.160,-4	-.898,-4	-.503,-4	.930,-4
24	.177,-3	-.347,-3	.165,-3	.732,-4	.795,-4	-.687,-4	-.331,-4	-.891,-4	.323,-4	.190,-3
25	.492,-4	-.112,-3	-.761,-5	.770,-4	.342,-4	-.253,-5	-.243,-4	-.598,-4	.752,-4	.122,-3
26	-.129,-3	.553,-4	-.926,-4	-.459,-4	.103,-3	-.986,-4	-.112,-3	-.111,-3	.108,-4	-.935,-4
27	-.162,-3	-.149,-4	-.349,-4	-.186,-4	.150,-3	-.121,-4	-.106,-3	-.520,-4	-.794,-4	-.135,-3
28	-.155,-3	-.159,-3	-.206,-4	-.531,-4	.925,-4	.818,-4	.150,-3	-.729,-4	-.986,-4	-.281,-4
29	-.172,-3	-.125,-3	-.507,-4	-.102,-3	.114,-3	.933,-4	.830,-4	-.665,-4	.713,-4	.451,-4
30	-.658,-4	-.105,-3	.536,-5	-.199,-4	.123,-3	.418,-4	-.129,-3	-.213,-4	.154,-3	.650,-4
31	-.869,-4	.351,-5	.331,-4	.207,-5	.128,-3	-.842,-4	-.125,-3	-.810,-4	.115,-3	-.139,-4
32	-.158,-3	.589,-4	-.320,-4	-.241,-5	.881,-4	-.115,-3	-.270,-4	-.704,-4	.114,-3	-.176,-4
33	-.128,-3	.163,-4	-.638,-4	-.100,-4	.249,-4	-.122,-3	-.409,-4	-.306,-5	.642,-4	.417,-5
34	-.985,-4	-.644,-4	-.571,-4	-.338,-5	.200,-4	-.130,-3	-.432,-5	-.378,-4	-.235,-4	.598,-5
35	-.703,-4	-.204,-4	-.428,-4	-.280,-4	-.05,-4	-.501,-4	.107,-5	-.564,-4	-.730,-4	-.567,-5
36	-.975,-4	.733,-6	-.438,-4	-.339,-4	.411,-5	-.149,-4	-.406,-4	.466,-4	-.117,-4	.354,-5
37	-.119,-3	-.567,-4	-.665,-5	-.728,-4	.708,-4	.193,-4	.768,-5	.519,-4	-.327,-5	-.304,-4
38	-.565,-4	-.663,-4	-.310,-5	-.769,-4	.573,-4	.473,-4	.190,-4	-.509,-4	-.229,-4	-.153,-4
39	-.794,-4	-.644,-5	.572,-5	-.743,-5	.193,-4	-.816,-5	-.493,-4	.684,-5	-.335,-4	-.185,-6
40	-.101,-3	.409,-4	.144,-4	.715,-4	-.720,-5	-.595,-4	-.120,-4	.121,-3	-.686,-4	-.158,-4
41	-.707,-4	-.315,-4	-.280,-4	.369,-4	.266,-4	-.426,-5	.373,-4	.140,-3	-.905,-4	-.563,-4
42	-.264,-4	.151,-4	-.516,-4	.348,-4	.238,-4	.358,-4	.314,-4	.357,-4	-.105,-3	-.704,-5
43	.961,-5	.563,-5	-.426,-4	-.120,-4	.228,-5	.463,-4	.147,-4	.268,-5	-.728,-4	.769,-5
44	.195,-4	-.229,-4	-.638,-4	-.484,-4	.175,-4	.146,-4	.358,-4	.210,-4	-.630,-4	-.241,-4
45	-.352,-4	.220,-4	-.333,-4	-.283,-4	.640,-5	.928,-5	.610,-4	.423,-4	-.153,-4	-.674,-4
46	-.757,-4	.744,-4	.311,-4	.380,-5	-.374,-4	.140,-4	.377,-4	.410,-4	.207,-4	-.741,-4
47	-.485,-4	.557,-4	.117,-5	.255,-4	-.485,-4	-.305,-5	.206,-4	-.518,-5	.243,-5	-.378,-4
48	-.449,-4	.126,-4	-.612,-4	.371,-4	-.802,-4	-.322,-4	.305,-4	-.327,-5	.143,-4	.472,-4
49	-.757,-5	.210,-4	-.151,-4	.222,-4	-.768,-4	-.441,-4	-.290,-5	-.419,-5	.354,-4	.814,-4
50	.845,-4	.473,-4	.284,-4	.357,-4	-.552,-4	-.517,-4	-.190,-4	-.121,-4	.381,-4	.474,-4
51	.600,-4	.531,-4	-.365,-4	.341,-4	-.215,-4	-.421,-4	-.119,-4	.189,-5	-.616,-5	-.400,-5
52	-.372,-7	.477,-4	-.373,-4	.160,-4	.167,-4	.351,-4	-.176,-4	.125,-4	-.436,-4	-.142,-4
53	.230,-5	.304,-4	.467,-5	.247,-4	.150,-4	.364,-4	-.229,-4	-.231,-4	-.338,-4	-.379,-4
54	.246,-4	.379,-5	.193,-4	.205,-4	.202,-4	.102,-4	-.397,-5	-.437,-4	-.229,-4	-.185,-4
55	.258,-4	-.150,-4	.370,-4	.613,-5	.558,-5	.622,-4	-.160,-4	-.236,-4	-.554,-4	-.171,-4
56	.213,-5	-.603,-4	.391,-4	-.242,-4	.782,-5	.311,-4	-.592,-5	.294,-4	-.869,-4	.880,-5
57	-.229,-6	-.294,-4	.321,-4	-.140,-4	-.113,-4	.373,-5	.424,-5	.756,-4	-.600,-4	-.122,-5
58	.194,-4	.212,-4	.193,-4	-.653,-5	-.184,-4	-.978,-5	-.434,-4	.268,-4	-.547,-5	-.282,-4
59	.837,-5	.277,-5	-.665,-5	.940,-5	-.113,-4	-.333,-5	-.412,-4	-.156,-4	.232,-4	-.262,-4
60	.000	.000	.000	.000	.000	.000	.000	.000	.000	.000

Run No. 32 ; v component

N	Separation Distance (m.) 6	12	18	24	36	42	48	72	84	90
00	.000	.000	.000	.000	.000	.000	.000	.000	.000	000
01	.243,-3	.586,-4	.194,-3	-.726,-4	.245,-4	.161,-3	.174,-3	.261,-3	.636,-4	.269,-3
02	.156,-3	.125,-3	.140,-3	.161,-3	.203,-3	.206,-3	.358,-3	.312,-3	.227,-3	.369,-3
03	.122,-3	.138,-3	.159,-3	.239,-3	.225,-3	.213,-3	.267,-3	.106,-3	.148,-3	.165,-3
04	.100,-3	.168,-3	.162,-3	.102,-3	.871,-4	.970,-4	.150,-3	.105,-4	.387,-4	-.686,-5
05	.130,-3	.120,-3	.143,-3	.111,-3	.423,-5	.472,-4	.533,-4	-.354,-4	.272,-4	-.892,-4
06	.114,-3	.66,-3	.139,-3	.121,-3	-.266,-4	.138,-5	.200,-4	-.103,-3	-.365,-4	-.712,-4
07	.123,-3	.152,-3	.130,-3	.315,-4	-.195,-4	.753,-5	.522,-4	-.121,-3	-.895,-4	-.915,-4
08	.734,-4	.141,-3	.142,-3	-.495,-4	-.739,-4	-.546,-4	.741,-4	-.544,-4	-.876,-4	-.807,-4
09	.127,-3	.108,-3	.141,-3	.564,-5	.181,-4	-.312,-4	.265,-4	-.571,-4	-.996,-4	-.130,-3
10	.212,-3	.103,-3	.137,-3	-.167,-4	.248,-4	.682,-4	.245,-4	-.117,-3	-.835,-4	-.895,-4
11	.255,-3	.100,-3	.339,-4	.994,-4	-.266,-4	-.314,-4	.802,-5	-.124,-3	-.431,-4	.294,-4
12	.248,-3	.105,-3	-.824,-5	.208,-3	.729,-4	-.105,-3	-.701,-4	-.136,-3	.375,-4	.545,-4
13	.160,-3	.353,-4	.221,-4	.129,-3	.681,-5	-.333,-4	-.539,-4	-.843,-4	.517,-4	.138,-4
14	.151,-3	.459,-4	-.335,-4	.111,-3	-.814,-4	-.562,-4	.912,-4	-.700,-4	-.768,-4	-.729,-5
15	.239,-3	.918,-4	-.102,-3	.103,-3	-.462,-4	-.117,-4	.108,-3	-.130,-3	-.163,-4	-.385,-4
16	.251,-3	.233,-4	-.430,-4	.844,-4	-.111,-4	.259,-4	-.359,-4	-.910,-4	.428,-4	-.567,-4
17	.170,-3	-.689,-5	-.438,-4	.110,-5	.262,-4	-.286,-4	-.599,-4	.461,-4	-.109,-4	-.202,-4
18	.140,-3	.453,-5	-.448,-4	-.698,-4	.357,-4	-.359,-4	.261,-5	.497,-4	-.280,-6	.303,-4
19	.152,-3	-.132,-4	.756,-4	-.118,-4	.290,-5	.529,-4	.375,-4	.900,-4	.931,-5	.103,-4
20	.144,-3	-.133,-4	.321,-4	-.166,-4	-.533,-4	.959,-4	-.648,-5	.627,-4	-.215,-4	.450,-4
21	.108,-3	-.122,-4	.137,-5	-.348,-4	-.681,-4	.777,-4	-.562,-4	.564,-5	-.618,-4	.795,-4
22	.121,-3	-.750,-4	-.389,-4	-.759,-4	.365,-6	.546,-4	-.415,-4	-.221,-4	-.337,-4	.495,-5
23	.211,-3	-.155,-3	-.117,-3	-.736,-4	-.112,-4	.103,-3	.497,-4	-.714,-4	.632,-4	.383,-4
24	.877,-4	-.394,-4	-.753,-4	-.390,-5	-.738,-4	.937,-4	.102,-5	-.104,-3	.795,-4	.277,-4
25	-.497,-4	-.355,-4	.154,-4	.432,-4	-.553,-4	.128,-5	-.157,-4	-.307,-4	.810,-4	-.442,-4
26	-.962,-4	-.117,-3	.366,-4	.594,-4	-.779,-4	.235,-4	.514,-4	.823,-4	.814,-4	-.119,-3
27	-.103,-3	-.118,-3	-.251,-4	.480,-4	-.982,-4	-.260,-4	.763,-4	.784,-4	.256,-4	-.917,-4
28	-.905,-4	-.511,-4	-.156,-5	.754,-4	-.859,-4	-.342,-4	.445,-4	.620,-4	-.147,-4	.119,-5
29	-.150,-4	-.382,-4	.708,-4	.435,-4	-.631,-7	-.112,-4	-.241,-4	.422,-4	.317,-4	.981,-5
30	.355,-5	-.299,-4	.445,-4	-.575,-4	-.351,-4	-.344,-4	-.773,-4	-.998,-5	.596,-4	.751,-5
31	.115,-4	-.168,-4	-.491,-4	-.739,-4	-.240,-4	-.119,-4	-.413,-4	-.363,-4	.400,-4	.320,-4
32	.336,-4	-.236,-4	-.158,-4	-.373,-4	-.327,-4	.138,-4	-.135,-4	-.369,-4	.208,-4	.353,-4
33	-.385,-4	-.406,-4	.723,-4	-.732,-4	-.641,-4	.190,-4	-.446,-4	.623,-5	.360,-5	.486,-4
34	-.110,-3	-.934,-5	.128,-3	-.430,-4	-.304,-4	.219,-4	-.313,-4	.589,-4	-.304,-4	.783,-4
35	-.100,-3	-.271,-4	.117,-3	-.552,-5	.362,-4	-.331,-5	-.348,-4	.224,-4	-.434,-4	-.474,-4
36	-.333,-4	-.356,-4	.210,-4	.347,-4	.482,-4	-.297,-4	-.531,-4	.275,-4	.450,-6	-.406,-5
37	-.233,-5	-.454,-4	.764,-5	.548,-4	.398,-4	-.359,-4	-.328,-4	.377,-4	.440,-4	.127,-3
38	-.115,-4	.513,-5	-.121,-4	.334,-4	-.127,-4	-.159,-4	.175,-4	.111,-3	-.787,-5	.101,-3
39	-.244,-4	.292,-4	-.859,-4	.443,-4	-.329,-4	-.220,-4	-.164,-4	.147,-3	-.921,-4	-.183,-4
40	-.486,-4	.200,-4	-.912,-4	.678,-4	.352,-5	-.662,-5	-.790,-4	.765,-4	-.552,-4	-.679,-4
41	-.149,-4	.709,-4	-.440,-4	.381,-4	.203,-4	-.775,-5	-.487,-4	.221,-4	-.272,-4	-.371,-4
42	-.194,-4	.238,-4	.317,-4	-.177,-4	-.120,-4	-.125,-4	-.843,-4	-.357,-4	.680,-5	-.990,-4
43	-.470,-4	-.407,-4	.109,-3	-.179,-4	.184,-5	-.335,-4	-.119,-3	-.116,-3	.923,-4	-.109,-3
44	-.547,-4	.303,-4	.887,-4	.358,-4	-.115,-4	-.165,-4	-.826,-4	-.763,-4	.656,-4	-.416,-4
45	-.382,-4	.984,-4	.355,-4	.728,-4	-.283,-4	-.649,-5	.113,-4	.565,-5	.726,-4	-.370,-4
46	-.711,-4	.955,-4	.632,-4	.211,-4	-.155,-4	-.552,-5	.437,-4	.160,-4	.889,-4	-.185,-4
47	-.129,-3	.300,-4	.359,-4	-.484,-4	-.287,-4	.938,-5	-.207,-5	.911,-5	.794,-5	.233,-4
48	-.132,-3	.268,-5	-.539,-4	-.586,-4	-.155,-4	-.189,-4	-.464,-4	.130,-5	-.730,-4	.906,-5
49	-.139,-3	-.368,-4	-.698,-4	-.157,-4	.588,-6	-.118,-4	-.345,-4	.235,-5	-.743,-4	-.760,-4
50	-.960,-4	-.121,-4	-.453,-4	.304,-4	.783,-5	.168,-4	.378,-5	-.467,-4	-.191,-4	-.495,-4
51	-.815,-4	.486,-4	.325,-4	.291,-5	-.281,-4	.263,-4	.156,-4	-.720,-4	-.548,-4	-.196,-4
52	-.993,-4	.669,-4	.116,-3	.237,-5	-.136,-4	.595,-4	.375,-4	-.267,-4	-.515,-4	-.332,-4
53	-.619,-4	.716,-5	.287,-4	-.398,-5	.341,-4	.859,-4	.963,-4	-.252,-4	-.916,-5	.365,-4
54	-.343,-4	-.407,-4	-.651,-4	.281,-4	.177,-4	-.143,-4	.101,-3	-.182,-4	.646,-5	.222,-4
55	-.300,-4	-.862,-4	-.328,-4	.638,-4	-.561,-4	-.111,-3	.793,-4	-.180,-4	.195,-4	-.130,-4
56	-.304,-4	-.286,-4	.121,-4	.115,-4	-.178,-4	-.565,-4	.195,-4	-.322,-4	.675,-4	.997,-4
57	-.165,-4	.565,-4	.263,-4	-.321,-5	.243,-4	.282,-4	.514,-4	.487,-4	.296,-4	.975,-4
58	-.412,-4	.408,-4	.430,-4	.297,-4	.363,-4	.147,-4	.101,-3	.892,-4	-.415,-4	-.150,-4
59	-.595,-4	-.209,-4	.991,-5	.244,-4	.444,-4	-.599,-5	.323,-4	.791,-4	-.408,-4	-.607,-5
60	.000	.000	.000	.000	.000	.000	.000	.000	.000	.000

Run No. 35a; u component

Separation Distance (n.)

N	0	12	18	24	36	42	48	72	84	90
00	.000	.000	.000	.000	.000	.000	.000	.000	.000	.000
01	-.399,-2	.286,-2	-.428,-2	-.634,-3	.105,-1	.806,-2	-.434,-2	.263,-3	.100,-1	-.126,-2
02	-.822,-2	.971,-3	-.497,-2	.111,-2	.899,-2	.255,-2	.205,-2	.141,-2	.280,-2	-.377,-2
03	-.544,-2	-.133,-2	-.306,-2	.233,-2	.202,-2	.305,-3	.381,-2	-.202,-2	-.262,-4	-.201,-2
04	-.697,-3	.865,-5	.514,-3	.229,-2	-.656,-3	-.657,-3	.121,-2	-.392,-2	-.328,-2	.268,-3
05	.751,-4	.780,-3	.359,-2	.232,-2	-.446,-3	-.108,-2	.117,-3	-.473,-2	.508,-3	-.149,-2
06	-.128,-2	-.142,-2	.230,-2	.174,-2	-.737,-4	-.283,-2	.121,-2	-.437,-2	.253,-2	-.157,-2
07	-.876,-3	-.986,-3	.119,-2	.107,-2	-.203,-3	-.174,-2	.113,-2	-.262,-2	.156,-2	-.201,-2
08	.620,-3	-.121,-3	.118,-2	.153,-3	-.567,-3	.285,-2	.299,-3	.153,-2	.627,-3	-.549,-3
09	.469,-3	-.788,-3	.156,-2	.105,-2	.992,-3	.238,-2	-.674,-3	.125,-2	.659,-3	.169,-2
10	.425,-3	.424,-3	.169,-2	.316,-3	.845,-3	.460,-5	-.223,-2	.900,-3	.576,-3	.180,-2
11	.124,-2	.994,-3	.128,-2	-.162,-2	-.150,-2	-.887,-3	-.121,-2	.135,-2	-.117,-4	.105,-2
12	.104,-2	.120,-2	.280,-3	-.171,-2	-.121,-2	-.108,-2	-.231,-3	.711,-3	-.844,-4	.990,-3
13	-.634,-3	.374,-3	-.625,-3	.497,-3	.969,-3	-.179,-2	-.502,-3	-.525,-3	-.130,-2	.361,-2
14	-.949,-3	.179,-3	-.164,-3	.174,-2	.833,-3	.264,-3	.129,-3	-.902,-3	-.473,-3	.244,-2
15	-.678,-3	.102,-2	.126,-2	-.58,-3	.768,-3	.137,-2	-.116,-2	-.582,-3	.385,-3	-.921,-3
16	-.146,-2	.129,-2	.281,-2	-.123,-2	.137,-2	.235,-2	-.177,-2	-.916,-3	.893,-3	.729,-4
17	-.825,-3	.327,-3	.187,-3	-.976,-3	.142,-3	.159,-2	-.685,-3	-.124,-2	.118,-2	.849,-3
18	-.489,-3	.116,-2	.475,-3	.509,-4	-.140,-2	.423,-3	.115,-3	.364,-4	.609,-3	.571,-3
19	-.236,-3	.111,-2	-.153,-3	-.111,-2	-.450,-3	.352,-3	-.219,-3	-.979,-4	-.251,-3	.945,-3
20	-.166,-3	-.237,-3	-.552,-3	-.137,-2	.209,-3	.997,-3	-.690,-4	-.630,-3	-.279,-4	.121,-2
21	.616,-4	-.109,-2	-.525,-3	-.156,-3	.249,-3	.143,-2	.341,-3	-.288,-3	-.493,-3	.352,-3
22	.385,-3	-.117,-2	-.159,-3	-.309,-3	.279,-4	.176,-2	.547,-3	.764,-3	-.906,-3	.223,-3
23	.372,-3	-.393,-3	-.205,-3	-.104,-2	-.562,-3	.678,-3	.716,-3	.543,-3	-.597,-3	.686,-3
24	.899,-3	-.234,-3	-.204,-3	-.743,-3	.227,-3	.461,-3	.794,-3	-.194,-3	.779,-3	.442,-4
25	.741,-3	-.459,-3	.479,-3	-.536,-3	.578,-3	.658,-3	.543,-3	-.234,-4	.196,-2	-.687,-3
26	-.275,-3	-.220,-3	.256,-3	-.405,-3	.270,-3	.682,-3	-.420,-3	.476,-3	.290,-3	-.234,-3
27	-.514,-3	-.361,-4	-.777,-3	-.354,-4	.108,-4	.103,-3	-.982,-3	.173,-3	-.863,-3	-.148,-3
28	-.292,-3	-.143,-3	-.215,-3	.252,-3	-.351,-3	-.230,-3	-.625,-3	-.327,-3	-.315,-3	-.168,-3
29	-.296,-3	-.104,-3	.202,-3	.293,-4	-.577,-3	-.404,-3	-.715,-4	-.535,-3	.601,-3	-.390,-3
30	.739,-4	.203,-3	.962,-4	-.143,-3	.849,-5	-.529,-3	.227,-3	-.292,-3	.607,-3	-.307,-3
31	.343,-3	.512,-3	-.174,-3	-.176,-3	.376,-3	-.340,-3	-.119,-3	-.243,-4	-.166,-3	-.826,-3
32	.380,-3	.621,-4	.142,-4	.225,-3	.229,-3	.520,-3	.205,-3	.551,-3	-.598,-3	-.106,-3
33	.479,-3	-.183,-3	.205,-3	.599,-3	.150,-3	.562,-4	.962,-3	.593,-3	-.125,-3	.387,-4
34	-.222,-4	.181,-3	-.199,-3	.394,-3	-.180,-3	-.407,-3	.851,-3	.146,-3	-.483,-3	-.509,-3
35	-.340,-3	.132,-3	-.202,-3	.428,-5	-.924,-4	-.112,-3	.356,-5	.492,-4	-.215,-3	-.759,-3
36	-.140,-3	-.321,-5	.172,-3	-.940,-4	-.830,-6	-.369,-5	-.254,-3	.303,-3	.113,-3	-.450,-3
37	.149,-3	-.196,-3	.230,-3	.273,-3	.244,-4	.569,-4	-.709,-3	.332,-4	.193,-3	-.515,-4
38	.176,-3	-.284,-3	.724,-4	.346,-3	-.341,-4	-.830,-4	-.736,-3	-.191,-3	.585,-4	.333,-4
39	.274,-3	-.430,-3	.566,-4	.105,-3	.591,-4	-.164,-3	-.341,-3	-.738,-4	-.296,-6	.117,-3
40	.350,-4	-.368,-3	.279,-3	.393,-5	-.477,-4	.120,-3	-.415,-3	.355,-4	.239,-4	.567,-4
41	-.120,-3	-.104,-3	.415,-3	.109,-3	.891,-4	.137,-3	-.285,-3	.175,-3	.257,-3	-.128,-3
42	-.224,-3	-.733,-4	.317,-3	.575,-4	.356,-3	-.692,-4	-.974,-4	.461,-4	.220,-3	.235,-3
43	-.719,-4	.445,-4	.234,-3	-.905,-4	.381,-3	-.252,-3	.388,-4	-.325,-4	.795,-4	-.205,-3
44	-.109,-3	.227,-3	.231,-3	-.248,-3	.891,-4	.577,-4	.216,-3	-.597,-4	.157,-3	-.518,-3
45	-.201,-3	.390,-3	-.104,-3	-.288,-3	.209,-4	.162,-3	.350,-4	-.471,-3	-.243,-3	-.443,-3
46	.176,-4	.168,-3	-.749,-4	-.693,-4	.227,-3	.286,-3	.959,-4	-.432,-3	-.290,-3	-.191,-3
47	.270,-3	.104,-3	.568,-4	.380,-4	.190,-3	.456,-3	.666,-4	-.274,-4	-.174,-3	.166,-3
48	.106,-3	-.317,-4	-.195,-3	.126,-3	-.328,-4	.358,-3	-.125,-4	.218,-3	.103,-3	.346,-3
49	-.214,-3	-.178,-3	-.268,-3	.300,-3	.406,-4	-.120,-3	-.469,-4	-.132,-4	.377,-4	.234,-3
50	-.279,-3	.316,-4	-.565,-4	.301,-3	.730,-4	.199,-4	-.920,-4	-.525,-4	-.172,-3	-.377,-4
51	.559,-4	.664,-5	-.585,-4	.674,-4	-.754,-4	.151,-3	-.126,-3	-.344,-4	-.868,-5	.612,-4
52	.171,-3	-.143,-3	-.874,-4	.296,-4	-.148,-3	.470,-4	-.725,-4	.535,-4	.204,-3	.215,-3
53	.291,-4	-.332,-4	.173,-3	-.294,-4	-.151,-3	-.965,-4	-.542,-6	.144,-3	.144,-3	-.118,-3
54	.133,-4	.975,-4	.427,-3	-.452,-4	-.982,-5	-.243,-3	-.247,-4	-.775,-4	.182,-3	.287,-3
55	-.479,-4	.272,-4	.150,-3	.807,-5	-.939,-4	-.290,-3	-.597,-4	-.422,-4	-.131,-4	.315,-3
56	.908,-4	.835,-4	.949,-5	-.231,-4	-.124,-3	-.109,-3	-.178,-3	.175,-3	-.320,-3	.611,-4
57	.298,-3	.483,-4	.143,-3	-.114,-5	.136,-4	.677,-4	-.221,-3	.396,-4	-.305,-3	-.126,-4
58	.144,-3	-.180,-3	.368,-4	.856,-4	-.649,-5	-.957,-4	-.235,-3	-.260,-3	-.212,-3	-.214,-4
59	.449,-5	-.160,-3	-.153,-3	.898,-4	-.108,-3	-.243,-3	-.134,-3	-.343,-3	-.162,-3	.540,-4
60	.000	.000	.000	.000	.000	.000	.000	.000	.000	.000

Run No. 35s; v component

	Separation Distance (m.)									
N	6	12	18	24	36	42	48	72	84	90
00	.000	.000	.000	.000	.000	.000	.000	.000	.000	.000
01	.796,-3	.209,-3	-.112,-3	.221,-3	.824,-4	.734,-3	.697,-3	.155,-2	.931,-3	.108,-2
02	-.189,-3	.439,-3	.301,-3	-.665,-3	-.397,-3	-.583,-3	.139,-2	.989,-3	.117,-2	.800,-3
03	-.520,-3	-.124,-4	.723,-3	-.118,-2	-.279,-3	-.525,-3	.122,-2	.907,-4	.338,-3	.801,-4
04	-.783,-3	-.767,-3	.698,-4	-.102,-2	.340,-4	-.893,-4	.498,-3	-.322,-3	.234,-3	-.234,-3
05	-.610,-3	-.942,-3	-.174,-3	-.760,-3	.655,-4	-.377,-3	-.132,-4	.425,-5	.788,-3	.464,-3
06	-.476,-3	-.142,-4	.277,-3	-.281,-3	-.117,-3	-.363,-4	.104,-3	.117,-3	.604,-3	.416,-3
07	-.941,-3	.119,-2	.258,-3	-.172,-3	.106,-3	.631,-3	.107,-2	-.380,-3	.315,-3	.118,-2
08	-.105,-2	.713,-3	-.231,-3	.133,-3	.256,-4	-.127,-3	.767,-3	-.599,-3	.168,-3	.846,-3
09	-.631,-3	-.352,-3	.497,-3	-.405,-4	.118,-3	-.409,-3	-.489,-3	-.385,-3	.244,-3	-.473,-3
10	-.254,-3	-.278,-3	.440,-3	-.111,-3	.393,-3	-.765,-3	-.614,-3	.300,-3	-.165,-3	-.588,-3
11	-.168,-3	.146,-3	.421,-3	-.510,-3	.986,-4	-.114,-2	-.313,-3	.771,-3	-.708,-3	-.243,-4
12	-.403,-3	.632,-3	.127,-4	-.511,-3	.285,-4	-.423,-3	.176,-3	.327,-4	-.629,-3	.432,-4
13	-.996,-4	.406,-3	-.160,-3	-.296,-3	-.785,-4	-.238,-3	.674,-3	-.247,-3	-.133,-3	-.326,-3
14	.278,-3	.117,-3	.287,-4	-.119,-4	.130,-4	-.662,-3	.260,-3	.231,-3	.447,-4	-.236,-3
15	-.907,-4	.230,-3	.471,-3	-.321,-3	-.113,-3	-.761,-3	-.397,-3	.426,-3	-.149,-3	-.179,-3
16	-.978,-3	.960,-4	.595,-3	-.355,-3	-.190,-3	-.157,-3	-.260,-3	.315,-3	-.398,-3	-.359,-3
17	-.895,-3	.102,-4	.472,-3	-.259,-3	-.207,-3	.488,-3	-.320,-3	.182,-3	.185,-3	.263,-3
18	-.460,-3	-.217,-3	.793,-4	.936,-4	.320,-3	.498,-3	-.271,-3	-.206,-4	.173,-3	.462,-3
19	-.178,-3	-.706,-4	-.260,-4	-.513,-4	.525,-3	.122,-3	-.664,-4	-.160,-3	-.170,-3	.426,-3
20	-.245,-3	.336,-3	-.464,-3	-.929,-3	-.185,-3	-.230,-3	.111,-3	-.352,-3	-.216,-3	.958,-3
21	.204,-3	-.211,-4	-.461,-3	-.746,-3	-.495,-3	-.209,-3	.115,-3	-.282,-3	.153,-3	.110,-2
22	.276,-3	-.757,-4	.252,-4	-.281,-3	-.440,-3	.635,-4	.580,-4	.481,-4	.516,-3	.659,-3
23	-.868,-5	-.110,-3	-.188,-3	-.230,-3	-.281,-3	.252,-3	.539,-3	.773,-4	-.119,-3	-.174,-3
24	-.313,-4	-.135,-3	-.438,-3	-.113,-3	.249,-3	.573,-3	.140,-3	.439,-3	-.294,-3	-.248,-3
25	.756,-4	.158,-3	-.272,-3	.306,-3	.304,-3	.605,-3	-.712,-3	.546,-3	-.208,-3	.405,-4
26	.206,-3	-.104,-3	.961,-4	.664,-4	-.971,-4	.138,-3	-.619,-3	.305,-3	-.161,-3	.252,-3
27	.534,-4	-.199,-3	-.291,-4	-.253,-3	-.222,-3	-.260,-3	-.160,-3	-.144,-3	-.305,-3	-.129,-4
28	.111,-3	.687,-4	-.357,-3	-.625,-4	-.301,-4	-.429,-3	-.232,-4	-.246,-3	-.254,-3	-.235,-3
29	.224,-3	.176,-3	-.229,-3	.906,-4	.150,-3	-.630,-3	.452,-4	-.128,-3	-.351,-4	.232,-4
30	-.155,-3	-.141,-3	.511,-4	.118,-3	.138,-3	-.190,-3	.118,-3	-.265,-3	-.215,-3	.193,-3
31	-.106,-3	.153,-3	-.143,-3	.231,-3	-.130,-3	-.846,-4	.554,-3	-.175,-4	-.816,-3	.409,-3
32	.204,-4	.447,-3	-.365,-4	.287,-3	.161,-3	-.147,-3	.685,-3	.282,-3	-.545,-3	.232,-3
33	.804,-4	.454,-3	.985,-4	.420,-4	.248,-3	.206,-3	.368,-3	-.843,-4	-.105,-3	-.887,-4
34	.289,-3	.715,-4	-.631,-4	-.102,-3	-.351,-3	.450,-3	.918,-4	-.223,-3	.167,-3	-.261,-3
35	.481,-3	-.519,-3	-.112,-3	.936,-4	-.505,-3	.362,-4	-.570,-4	-.274,-3	.233,-3	-.446,-3
36	.350,-3	-.389,-3	.114,-3	.587,-4	-.135,-3	-.269,-3	-.114,-3	-.307,-3	-.109,-3	-.392,-3
37	-.719,-4	.811,-4	.150,-3	-.981,-4	.271,-3	-.131,-3	-.111,-3	-.110,-3	-.768,-3	-.152,-3
38	-.214,-3	.290,-3	-.782,-4	-.127,-3	.187,-3	.183,-4	-.193,-4	-.184,-3	-.649,-3	.172,-3
39	.104,-3	.234,-3	-.270,-3	-.267,-4	-.495,-4	.925,-4	-.236,-4	-.205,-3	-.289,-3	-.926,-4
40	.247,-3	.211,-4	-.579,-3	.663,-4	-.966,-4	.151,-3	-.163,-4	.724,-4	-.446,-3	-.650,-3
41	.154,-3	-.359,-4	-.269,-3	.638,-4	.357,-4	-.179,-4	.546,-4	.957,-4	-.192,-3	-.521,-3
42	.427,-3	-.755,-4	.165,-3	.185,-4	-.208,-5	.827,-4	.238,-5	-.534,-4	.119,-4	-.930,-4
43	.317,-3	-.240,-4	.127,-3	.363,-4	-.250,-3	.284,-3	-.429,-4	-.300,-3	.605,-4	.227,-3
44	-.478,-3	-.166,-3	.152,-3	.216,-3	-.344,-3	.112,-3	-.112,-3	-.423,-3	-.249,-4	.265,-4
45	-.575,-3	-.331,-3	.201,-3	.183,-3	-.141,-3	-.698,-4	.291,-4	-.392,-3	-.247,-3	.118,-3
46	-.221,-4	-.456,-3	.227,-3	.226,-3	-.216,-3	-.213,-3	.269,-3	-.339,-5	-.264,-3	.248,-3
47	.152,-3	-.330,-3	.280,-4	-.991,-4	-.255,-3	-.143,-3	.273,-3	.409,-3	-.264,-3	-.242,-3
48	.639,-4	-.650,-4	-.387,-3	-.332,-3	-.185,-4	-.853,-4	.241,-3	.136,-3	-.722,-4	-.414,-3
49	.186,-3	-.628,-4	-.386,-3	-.266,-3	.624,-4	-.127,-3	.224,-3	-.236,-3	.130,-3	.598,-4
50	.491,-3	-.238,-3	-.187,-3	-.111,-3	.344,-4	-.230,-3	.497,-3	-.820,-4	.143,-3	.690,-4
51	.798,-3	-.144,-4	-.305,-3	.425,-4	-.287,-3	-.537,-3	.528,-3	.335,-3	-.393,-5	.122,-3
52	.634,-3	.229,-3	-.333,-3	-.565,-4	-.379,-3	-.462,-3	.118,-3	.393,-3	-.787,-4	-.280,-4
53	.567,-3	.199,-3	-.214,-3	-.770,-4	.959,-4	-.201,-3	-.437,-3	.303,-3	-.241,-3	-.271,-4
54	.102,-3	.153,-3	-.201,-4	-.899,-4	.192,-3	.394,-4	-.417,-3	.520,-4	-.258,-3	-.442,-4
55	-.244,-3	.451,-3	-.290,-5	.912,-4	-.185,-3	.287,-3	.343,-4	-.438,-4	-.716,-4	-.167,-3
56	-.292,-3	.491,-3	-.586,-4	.906,-4	-.343,-3	.247,-3	.289,-3	-.428,-4	.118,-3	.904,-4
57	-.349,-4	.315,-3	.166,-3	-.797,-4	-.554,-4	.151,-3	.301,-3	-.277,-3	.345,-3	.842,-4
58	.185,-3	.321,-3	.291,-3	.218,-4	.256,-3	.150,-3	.612,-4	-.317,-3	.129,-3	-.453,-4
59	.426,-4	.212,-3	.121,-3	.114,-3	.141,-3	-.990,-4	.531,-4	-.147,-5	.167,-4	.836,-4
60	.000	.000	.000	.000	.000	.000	.000	.000	.000	.000

Run No. 39 ; u component

N	Separation Distance (m.)									
	6	12	18	24	36	42	48	72	84	90
00	.000	.000	.000	.000	.000	.000	.000	.000	.000	.000
01	-.140,-2	.142,-2	-.438,-4	-.589,-3	.179,-2	.663,-3	-.238,-2	-.133,-2	-.135,-2	-.183,-2
02	-.125,-2	.758,-3	.409,-3	-.783,-3	.103,-2	-.332,-3	-.102,-2	-.747,-3	.745,-3	-.437,-3
03	-.128,-2	.457,-3	.878,-4	-.368,-3	.362,-3	-.270,-3	-.111,-2	-.455,-3	.369,-3	-.549,-3
04	-.641,-3	.633,-3	-.112,-4	.318,-4	-.260,-3	-.242,-4	-.100,-2	-.498,-3	-.602,-3	.114,-3
05	-.146,-3	.290,-3	.847,-4	.289,-3	-.476,-3	-.474,-5	-.101,-2	-.432,-3	-.941,-3	.176,-3
06	-.535,-4	.875,-4	.262,-3	.249,-3	-.104,-3	.224,-3	-.230,-3	-.255,-3	-.870,-3	.105,-3
07	-.308,-3	.313,-5	.270,-3	.377,-3	.462,-3	.405,-3	.469,-4	-.119,-4	-.207,-3	-.225,-3
08	-.273,-3	.865,-4	.754,-4	-.551,-4	.526,-3	.330,-3	.201,-3	.550,-4	.364,-3	-.169,-3
09	.334,-3	.143,-3	.130,-3	-.388,-3	.157,-3	.383,-3	.141,-3	.137,-3	.242,-3	-.313,-3
10	.261,-3	.861,-4	.180,-3	-.516,-3	-.608,-4	.828,-4	.757,-4	.455,-3	.509,-3	-.831,-4
11	-.402,-4	-.437,-3	.782,-4	-.651,-3	.590,-3	.887,-4	-.392,-3	.683,-3	.421,-5	.686,-4
12	.260,--	-.507,-3	-.182,-3	-.322,-3	.639,-3	.294,-3	-.254,-3	.679,-3	-.206,-3	.408,-3
13	.578,-3	.205,-3	-.227,-3	.198,-3	-.361,-3	.355,-3	-.193,-3	.228,-4	.110,-3	.759,-3
14	.321,-3	.428,-3	-.537,-3	-.535,-4	.374,-4	.349,-3	-.397,-4	-.504,-4	.283,-3	.463,-3
15	-.338,-3	.261,-3	-.289,-3	-.196,-3	.495,-3	.515,-4	.130,-3	-.477,-4	.263,-3	.108,-3
16	-.470,-3	.270,-3	.503,-4	.145,-4	.669,-3	-.162,-3	.471,-3	-.452,-4	.391,-3	-.502,-4
17	-.618,-4	.656,-4	.232,-3	.132,-3	.269,-3	-.126,-3	.254,-3	-.196,-3	.992,-4	-.186,-3
18	.155,-4	-.456,-4	.976,-4	-.732,-4	.260,-3	.146,-3	.359,-4	-.101,-3	-.106,-3	-.458,-5
19	-.202,-3	.540,-4	.127,-3	.966,-6	.155,-3	.781,-4	-.350,-4	-.135,-3	-.189,-3	.231,-3
20	-.150,-3	.343,-4	.235,-3	.103,-3	.717,-4	.584,-4	-.271,-3	-.221,-3	.348,-4	.505,-3
21	-.220,-3	-.235,-3	.466,-4	.241,-3	.150,-3	-.267,-3	-.240,-3	-.168,-3	.734,-4	.203,-3
22	-.232,-3	-.310,-3	.664,-4	.316,-3	.220,-3	-.575,-3	-.116,-3	-.950,-4	-.630,-4	-.157,-3
23	-.529,-4	-.275,-3	-.873,-4	.273,-3	.868,-4	-.482,-3	-.732,-4	-.137,-3	-.226,-3	-.124,-3
24	-.119,-3	-.212,-3	-.356,-4	.242,-3	-.106,-3	-.128,-3	-.117,-3	-.281,-3	-.215,-3	-.105,-3
25	.709,-4	-.115,-3	.120,-3	.649,-4	-.160,-3	.450,-4	-.141,-3	-.235,-3	-.198,-3	-.926,-4
26	.711,-4	.115,-3	.668,-4	-.217,-4	-.179,-3	-.859,-4	.139,-3	-.170,-4	.156,-5	.225,-4
27	-.455,-4	.229,-3	-.875,-5	-.783,-4	-.497,-4	-.505,-4	.216,-3	-.124,-3	.271,-3	-.158,-4
28	.160,-4	.135,-3	-.419,-4	-.264,-3	.109,-3	.128,-4	.102,-3	-.746,-4	.281,-3	.147,-3
29	.663,-4	-.124,-3	-.136,-3	-.109,-3	.878,-4	.125,-3	.120,-4	.581,-4	.102,-3	.274,-3
30	.106,-3	-.149,-3	-.157,-3	.749,-4	.795,-4	.951,-4	.661,-4	.676,-4	.636,-4	.186,-3
31	.189,-3	-.660,-4	-.133,-3	.958,-4	.678,-5	.610,-4	.522,-4	-.282,-4	.577,-4	.464,-4
32	.175,-3	-.573,-4	-.282,-4	.223,-4	.103,-4	-.534,-5	-.707,-4	-.941,-4	.675,-4	.340,-4
33	.157,-3	-.865,-4	.425,-4	.367,-4	.333,-4	-.737,-4	-.680,-4	-.139,-3	.323,-4	-.364,-4
34	.644,-4	-.150,-4	.256,-5	-.404,-4	.318,-4	-.945,-4	.193,-3	.998,-5	-.107,-3	.285,-4
35	.389,-4	-.176,-5	.201,-4	-.592,-4	.415,-4	-.441,-4	.164,-3	-.217,-4	-.166,-3	-.233,-4
36	.631,-5	-.510,-4	.118,-3	-.117,-4	.368,-4	.309,-5	.543,-4	-.139,-3	-.236,-4	-.277,-4
37	-.612,-4	-.315,-4	.117,-3	.788,-4	-.464,-4	.478,-5	-.157,-3	-.158,-3	.899,-4	.644,-4
38	-.916,-4	-.525,-4	.287,-4	.515,-4	-.615,-4	-.905,-4	-.113,-3	-.825,-4	.542,-4	.341,-5
39	-.792,-4	-.189,-3	.682,-4	-.137,-3	.540,-5	-.389,-4	.382,-4	-.221,-4	-.666,-4	-.787,-4
40	-.131,-3	-.258,-3	.402,-4	-.209,-3	.757,-4	.128,-3	.502,-4	.144,-4	-.531,-4	.744,-4
41	-.425,-4	-.111,-3	-.786,-4	-.633,-4	.630,-4	.546,-4	.969,-4	.189,-5	-.529,-4	.101,-3
42	-.566,-4	-.272,-4	-.114,-3	.185,-4	.721,-4	-.687,-4	.169,-3	.287,-4	-.137,-4	.490,-4
43	-.923,-4	.757,-5	-.406,-4	-.143,-4	.786,-4	-.139,-3	.152,-3	.130,-4	-.630,-4	-.209,-4
44	-.142,-4	.465,-4	-.109,-3	-.113,-3	.240,-4	-.115,-3	.603,-4	-.625,-4	.374,-5	-.633,-5
45	.865,-4	.733,-4	-.120,-3	-.702,-4	.275,-5	-.194,-4	-.246,-5	-.914,-4	.216,-4	.626,-4
46	.640,-4	.119,-3	-.342,-4	-.225,-5	.611,-4	.230,-4	.258,-4	-.641,-4	.406,-4	.415,-4
47	.375,-4	-.851,-5	-.538,-4	.191,-4	.550,-5	-.294,-4	.137,-4	-.588,-4	-.615,-6	-.911,-4
48	.773,-5	-.129,-3	.468,-6	-.420,-5	-.409,-4	-.157,-4	.234,-4	-.115,-3	-.456,-4	-.623,-4
49	-.505,-4	-.693,-4	.383,-4	.231,-4	.178,-4	-.397,-5	.251,-4	-.831,-4	-.450,-4	-.152,-4
50	-.421,-4	-.916,-5	-.933,-7	.404,-4	.107,-3	-.223,-4	.353,-4	.302,-6	-.300,-4	-.467,-4
51	-.174,-4	-.188,-4	-.703,-5	.525,-4	.104,-3	-.270,-4	-.368,-4	-.304,-4	.361,-4	-.173,-4
52	.289,-4	.534,-5	.428,-4	-.238,-4	.476,-4	.128,-4	-.302,-4	-.120,-3	.824,-4	-.315,-4
53	.581,-4	.409,-4	.100,-4	-.613,-4	.405,-4	.795,-5	.316,-5	-.968,-4	.126,-6	-.662,-4
54	.411,-4	.159,-4	-.665,-4	.290,-4	.926,-4	-.523,-4	.488,-4	-.712,-5	-.303,-4	.455,-4
55	.956,-5	-.618,-4	-.152,-4	.111,-3	.123,-3	.564,-5	.647,-5	-.543,-4	-.632,-4	.491,-4
56	-.142,-4	-.338,-5	.126,-4	.177,-5	.326,-4	.227,-4	-.694,-4	-.426,-4	.500,-5	-.239,-4
57	-.550,-4	.641,-4	-.410,-5	-.349,-4	.268,-4	-.452,-4	-.820,-4	-.222,-4	.311,-4	-.562,-4
58	-.903,-4	.542,-4	.277,-4	.203,-5	.316,-4	-.613,-4	-.454,-4	.479,-5	.452,-4	-.104,-4
59	-.719,-4	-.143,-4	.742,-4	.196,-4	.105,-4	-.376,-4	-.113,-4	.710,-5	.360,-4	.288,-4
60	.000	.000	.000	.000	.000	.000	.000	.000	.000	.000

Run No. 39 ; v component

Separation Distance (m.)

N	6	12	18	24	36	42	48	72	84	90
00	.000	.000	.000	.000	.000	.000	.000	.000	.000	.000
01	.779,-5	.330,-3	.607,-4	-.265,-3	-.115,-3	-.137,-3	.247,-3	.256,-3	.446,-3	.517,-3
02	-.187.-3	.834,-4	-.365,-3	-.217,-3	-.335,-3	-.466,-3	.156,-3	.420,-4	.262,-4	-.553,-4
03	-.169,-4	.653,-4	.145,-4	.981,-4	.128,-4	.791,-4	.534,-4	-.926,-4	-.777,-4	-.562,-5
04	.240,-4	.355,-4	.154,-3	.252,-3	.291,-3	.326,-3	.374,-4	-.802,-4	-.553,-4	-.371,-4
05	-.185,-3	-.849,-4	-.189,-3	.419,-4	.141,-3	.175,-3	.611,-4	-.978,-4	-.786,-4	-.137,-3
06	-.279,-3	-.114,-3	-.458,-3	-.207,-3	.536,-4	.414,-4	.119,-3	-.165,-3	-.117,-3	-.169,-3
07	-.770,-4	-.109,-3	-.304,-3	-.225,-3	-.770,-4	-.827,-4	.129,-3	-.473,-4	-.528,-4	.633,-4
08	-.323,-4	-.125,-3	-.124,-3	-.310,-4	-.534,-4	-.119,-3	.148,-3	-.174,-4	.700,-4	.246,-4
09	.179,-4	-.120,-3	-.172,-4	.118,-3	.577,-4	.105,-4	.193,-3	-.988,-5	.167,-3	.279,-4
10	-.150,-4	-.368,-4	-.468,-4	.696,-4	.294,-5	-.109,-3	.700,-4	.133,-4	.782,-4	-.114,-4
11	-.124,-3	-.134,-4	-.224,-4	-.986,-4	.949,-4	-.169,-3	.579,-5	.169,-4	-.258,-4	-.156,-3
12	-.524,-4	-.138,-3	-.915,-4	-.589,-4	.123,-3	.312,-4	.749,-4	.662,-4	-.745,-4	-.227,-3
13	.846,-4	-.146,-3	.208,-4	-.336,-4	.902,-4	.247,-3	.508,-4	.992,-4	-.437,-4	-.127,-3
14	-.396,-4	-.349,-4	.149,-3	-.123,-3	.140,-3	.119,-3	-.212,-4	.127,-3	-.509,-5	.302,-5
15	-.599,-4	-.302,-4	.601,-4	-.668,-4	.232,-3	-.341,-4	-.124,-4	.105,-3	.117,-3	.159,-4
16	-.382,-4	-.460,-4	-.127,-4	-.297,-4	.158,-3	.253,-4	-.674,-6	.380,-4	.676,-4	.201,-4
17	-.673,-4	-.352,-4	-.114,-3	.323,-4	.375,-4	.399,-6	-.878,-4	.310,-5	.708,-4	.127,-3
18	-.800,-4	-.713,-4	-.139,-3	.766,-4	.126,-4	-.390,-4	-.136,-3	-.101,-3	.100,-3	.622,-4
19	-.143,-3	.272,-4	.249,-4	-.155,-4	.707,-4	-.670,-4	-.105,-3	-.754,-4	-.288,-4	-.816,-4
20	-.212,-3	.739,-4	-.417,-4	-.627,-4	.785,-4	-.602,-4	-.201,-3	-.517,-4	-.126,-3	-.486,-4
21	-.140,-3	.488,-5	-.913,-4	-.107,-3	.114,-4	.254,-4	-.256,-3	-.426,-4	-.657,-4	.199,-5
22	-.127,-3	.526,-4	-.345,-4	-.631,-4	.537,-4	.702,-4	-.185,-3	-.132,-4	.472,-4	.550,-4
23	-.937,-4	.484,-4	.564,-4	.290,-4	.795,-4	-.225,-4	-.165,-3	.172,-4	.932,-4	.633,-4
24	.115,-4	-.479,-4	.138,-3	-.917,-5	.405,-4	-.259,-5	-.168,-3	-.205,-4	.352,-4	.218,-5
25	.153,-3	-.122,-4	.154,-3	-.246,-4	-.472,-4	-.993,-4	-.135,-3	.558,-5	-.442,-5	-.919,-4
26	.116,-3	-.137,-4	.979,-4	-.262,-4	-.301,-4	.126,-3	-.104,-3	.662,-5	-.572,-5	-.314,-4
27	-.849,-5	-.340,-4	.129,-3	-.400,-4	-.855,-4	.736,-4	-.679,-4	.464,-4	-.120,-4	.106,-3
28	-.563,-4	-.637,-4	-.208,-5	.400,-4	-.413,-4	.107,-3	.998,-5	.126,-3	-.285,-4	.171,-3
29	-.781,-4	-.512,-4	-.914,-4	.125,-3	-.104,-3	.105,-4	-.585,-4	.131,-3	.114,-4	.947,-4
30	-.117,-3	.210,-4	.611,-5	.554,-4	-.181,-3	-.777,-4	-.329,-4	.824,-4	.257,-4	.234,-4
31	-.356,-4	.575,-5	.271,-4	.430,-4	-.610,-4	-.613,-4	.611,-4	.209,-4	-.119,-4	.365,-5
32	-.472,-4	-.660,-4	-.569,-5	.253,-5	.854,-4	-.225,-4	.118,-5	.824,-5	-.291,-6	.255,-4
33	-.400,-4	-.978,-5	-.448,-5	-.173,-4	.392,-4	-.403,-4	-.316,-4	.132,-4	.686,-5	.730,-5
34	-.139,-4	-.152,-4	-.226,-4	-.382,-4	.245,-4	-.671,-4	-.680,-5	-.114,-4	.230,-4	-.593,-5
35	-.136,-4	-.788,-4	.382,-5	-.484,-5	.340,-4	-.205,-4	.296,-4	-.576,-5	.764,-5	.487,-4
36	.110,-4	-.913,-4	-.158,-4	-.255,-4	.129,-4	.468,-4	.579,-4	.243,-4	-.298,-4	.738,-4
37	.193,-4	-.524,-5	-.344,-4	-.687,-4	.171,-4	.120,-3	.380,-4	.173,-4	-.245,-4	.767,-5
38	-.926,-5	.540,-4	.321,-4	.982,-5	.235,-5	.793,-4	.221,-4	.742,-4	.515,-5	-.544,-4
39	-.435,-4	.352,-4	.311,-4	.276,-4	-.105,-3	-.360,-4	.602,-4	.455,-4	-.402,-6	-.451,-4
40	.967,-5	-.678,-4	-.415,-4	-.285,-4	-.132,-3	-.101,-3	.403,-4	-.505,-4	-.146,-4	-.576,-4
41	.151,-3	-.673,-4	.954,-5	.489,-5	-.101,-5	-.332,-5	-.608,-4	-.628,-4	-.354,-4	.441,-4
42	.154,-3	-.316,-4	.131,-3	.878,-4	-.325,-4	.610,-4	-.903,-4	-.583,-4	-.535,-4	.887,-4
43	.810,-4	-.619,-4	.173,-3	.758,-4	-.726,-4	-.235,-4	-.939,-5	-.218,-4	.283,-4	.839,-4
44	.422,-4	-.605,-4	.624,-4	-.599,-4	-.159,-4	-.606,-4	.522,-4	-.161,-4	.363,-4	.615,-4
45	-.110,-4	-.518,-5	.591,-4	-.124,-3	-.311,-4	.250,-4	.549,-4	.188,-4	-.213,-4	.109,-3
46	-.112,-3	-.144,-4	.527,-4	-.456,-4	-.192,-4	.465,-4	.123,-3	.666,-4	.238,-5	.981,-4
47	-.165,-3	-.690,-4	-.149,-3	-.135,-4	-.593,-4	-.468,-4	.660,-4	.446,-4	.824,-4	.407,-4
48	-.104,-3	-.378,-4	-.179,-3	-.225,-4	-.283,-4	-.497,-4	-.456,-5	.341,-4	.634,-4	.526,-4
49	-.406,-4	-.979,-5	-.527,-4	-.259,-4	-.127,-5	.168,-4	.464,-4	.564,-4	-.183,-4	.343,-4
50	.423,-5	-.167,-4	-.951,-4	-.152,-4	-.510,-4	.392,-4	.768,-4	.996,-5	-.118,-4	-.656,-4
51	.263,-4	-.171,-6	-.624,-4	.186,-4	-.217,-4	.174,-4	.119,-3	.368,-5	.143,-4	-.636,-4
52	-.534,-5	.235,-4	-.244,-4	.732,-5	.570,-4	.203,-4	.108,-3	-.784,-5	.458,-4	.381,-4
53	-.765,-5	-.127,-4	-.329,-4	-.425,-4	.446,-4	.248,-4	.331,-4	.304,-5	.370,-4	.297,-4
54	.131,-4	-.438,-4	.636,-5	-.311,-4	.206,-4	-.989,-5	-.297,-4	.766,-5	.340,-4	-.730,-4
55	.267,-4	-.872,-6	.202,-4	-.755,-4	-.490,-4	-.315,-4	-.209,-4	-.104,-4	.413,-4	-.122,-3
56	.731,-4	-.159,-4	-.580,-4	-.116,-3	-.852,-4	-.378,-6	.230,-4	.253,-4	.441,-4	-.670,-4
57	.107,-3	-.281,-4	-.362,-4	-.279,-4	-.276,-4	.921,-5	.282,-4	.192,-4	.661,-4	.488,-5
58	.927,-4	-.601,-4	-.203,-4	-.117,-4	.304,-4	-.252,-4	.255,-4	.162,-4	.129,-3	.333,-4
59	.239,-4	-.686,-4	-.579,-4	-.124,-4	.606,-4	-.421,-4	.159,-4	.402,-4	.118,-3	.628,-4
60	.000	.000	.000	.000	.000	.000	.000	.000	.000	.000

Run No. 43 ; u component

N	Separation Distance (m.)									
	6	12	18	24	36	42	48	72	84	90
00	.000	.000	.000	.000	.000	.000	.000	.000	.000	.000
01	.911,-2	.382,-1	.492,-1	.453,-1	.894,-1	.107	.535,-1	.768,-1	.118	.139
02	.100,-1	.241,-1	.326,-1	.372,-1	.651,-1	.814,-1	.844,-1	.862,-1	.105	.117
03	.106,-1	.188,-1	.286,-1	.258,-1	.421,-1	.485,-1	.506,-1	.506,-1	.524,-1	.518,-1
04	.134,-1	.207,-1	.281,-1	.277,-1	.350,-1	.329,-1	.219,-1	.142,-1	.116,-1	.740,-2
05	.930,-2	.215,-1	.235,-1	.306,-1	.292,-1	.216,-1	.121,-1	.133,-2	.394,-3	-.269,-3
06	.482,-2	.158,-1	.140,-1	.182,-1	.167,-1	.112,-1	-.133,-2	-.720,-2	-.832,-2	-.740,-2
07	.176,-2	.117,-1	.954,-2	.118,-1	.733,-2	.549,-2	-.691,-2	-.396,-2	-.552,-2	-.609,-2
08	.311,-2	.117,-1	.975,-2	.144,-1	.183,-2	-.359,-3	-.970,-2	-.262,-2	.723,-3	-.429,-2
09	.569,-2	.111,-1	.914,-2	.130,-1	-.679,-3	-.462,-2	-.143,-1	.168,-2	.671,-2	.369,-3
10	.687,-2	.100,-1	.992,-2	.800,-2	-.336,-2	-.677,-2	-.463,-2	.540,-2	.134,-2	-.174,-2
11	.643,-2	.101,-1	.102,-1	.630,-2	-.415,-2	-.643,-2	.101,-2	.297,-2	.191,-2	-.124,-2
12	.751,-2	.852,-2	.925,-2	.170,-2	-.454,-2	-.178,-2	.673,-3	-.573,-3	.267,-2	-.176,-2
13	.548,-2	.620,-2	.567,-2	.471,-3	-.278,-2	.464,-3	-.247,-3	-.212,-2	.257,-2	.239,-2
14	.449,-2	.503,-2	.239,-2	-.642,-3	-.283,-2	-.874,-4	-.829,-3	-.170,-2	.672,-3	.255,-2
15	.374,-2	.406,-2	.149,-2	-.319,-2	-.311,-2	.104,-2	-.195,-2	-.882,-3	.605,-3	.202,-2
16	.360,-2	.590,-2	.251,-2	-.257,-2	-.274,-2	-.126,-3	-.542,-3	.221,-3	-.119,-2	-.705,-3
17	.347,-2	.469,-2	.285,-2	-.106,-2	-.183,-3	-.773,-3	.207,-2	.145,-2	-.158,-2	-.696,-3
18	.328,-2	.319,-2	.202,-2	-.182,-2	.144,-5	-.347,-3	.135,-2	-.121,-2	-.125,-2	-.155,-2
19	.180,-2	.804,-3	.304,-3	-.111,-2	.116,-3	.162,-2	-.566,-3	-.198,-2	.729.-3	-.105,-2
20	.200,-2	.189,-2	-.372,-4	-.414,-3	-.228,-3	.257,-2	.288,-3	.832,-3	-.620,-3	-.204,-2
21	.399,-2	.336,-2	.183,-3	-.117,-2	-.580,-3	.173,-2	.133,-2	.116,-2	.802,-3	.150,-3
22	.401,-2	.237,-2	-.580,-3	-.790,-3	-.139,-2	.124,-4	.377,-3	-.451,-3	.104,-2	.622,-3
23	.193,-2	.126,-2	-.894,-3	-.470,-3	.607,-3	-.357,-4	-.238,-2	.582,-3	.116,-2	.909,-3
24	.117,-2	.743,-3	-.755,-3	-.143,-2	.101,-2	.801,-3	-.317,-2	.993,-3	.833,-3	-.117,-3
25	.129,-2	.505,-3	-.133,-2	-.102,-2	.247,-3	.363,-3	-.273,-2	.120,-3	.118,-2	.674,-3
26	.198,-2	.503,-3	-.138,-2	-.259,-3	-.620,-3	-.380,-4	-.192,-2	-.236,-2	.111,-2	.171,-2
27	.181,-2	.682,-3	-.238,-3	-.674,-3	-.125,-2	-.190,-3	-.139,-2	-.102,-2	.599,-3	.133,-2
28	.252,-2	-.624,-3	-.673,-3	-.609,-3	-.179,-2	-.119,-2	-.300,-4	.314,-3	-.460,-3	-.175,-3
29	.260,-2	-.105,-2	-.158,-2	-.663,-3	-.269,-3	-.323,-3	-.507,-4	.848,-3	-.650,-3	.769,-4
30	.201,-2	-.363,-3	-.150,-2	-.335,-3	-.737,-5	.416,-3	.209,-3	.100,-2	-.102,-2	.301,-3
31	.185,-2	.171,-3	-.763,-3	.224,-3	-.326,-3	.721,-3	.484,-3	.463,-3	.135,-2	.825,-3
32	.253,-2	-.716,-4	-.959,-3	-.457,-3	.303,-3	-.430,-3	.267,-3	-.102,-2	.158,-2	.297,-3
33	.215,-2	-.343,-3	-.121,-2	-.486,-3	.160,-3	-.131,-2	.726,-3	-.820,-3	.737,-3	.109,-2
34	.968,-3	-.744,-3	-.714,-3	-.643,-3	-.491,-3	-.786,-3	.100,-2	-.604,-3	.883,-4	.109,-2
35	.148,-2	-.115,-2	-.103,-2	-.386,-3	-.101,-2	.399,-3	.241,-3	-.283,-3	.591,-3	.670,-3
36	.149,-2	-.101,-2	-.449,-3	.364,-4	-.109,-2	.451,-3	-.122,-3	.438,-3	.288,-3	-.192,-3
37	.604,-3	-.618,-3	.610,-3	.772,-4	-.542,-4	.148,-3	.935,-4	.555,-3	-.930,-4	.426,-3
38	.475,-3	-.113,-2	.698,-3	-.329,-3	.484,-3	.102,-3	.177,-3	.152,-3	-.551,-3	.625,-3
39	.496,-3	-.883,-3	.393,-4	-.283,-3	.324,-3	-.161,-4	.446,-3	.612,-3	-.225,-3	.892,-3
40	.616,-3	.645,-4	-.105,-3	-.509,-3	.533,-4	-.226,-3	.518,-3	.920,-3	-.629,-3	.201,-3
41	.562,-3	.601,-3	-.149,-3	-.307,-3	.373,-3	-.101,-3	.371,-3	.819,-3	-.189,-3	-.107,-3
42	.192,-3	.632,-3	-.237,-3	.265,-3	-.411,-4	-.123,-5	.541,-3	.305,-3	-.759,-4	-.116,-3
43	.277,-3	.589,-3	-.111,-3	-.255,-3	-.329,-5	.953,-4	.816,-3	.213,-4	.752,-3	.364,-3
44	.946,-3	.241,-5	.167,-3	-.418,-3	-.358,-3	-.130,-3	.262,-3	-.273,-3	.811,-3	.353,-3
45	.992,-3	-.107,-3	-.170,-3	.434,-3	-.312,-3	-.267,-3	-.319,-3	-.394,-3	.505,-3	.367,-3
46	.598,-3	.448,-4	-.224,-3	.813,-3	-.200,-4	-.221,-3	-.862,-3	-.446,-3	.413,-4	-.349,-3
47	.432,-3	-.306,-3	.168,-3	.408,-3	.372,-3	-.957,-4	-.817,-3	-.377,-4	-.997,-4	-.351,-3
48	.477,-3	-.367,-3	.434,-3	-.300,-4	.710,-3	.180,-3	-.300,-3	.453,-3	-.215,-3	-.452,-3
49	.318,-3	.652,-5	.389,-3	-.240,-4	.314,-3	-.875,-5	-.310,-3	.479,-3	-.189,-3	-.328,-3
50	.150,-3	.397,-3	.282,-3	.233,-3	-.389,-3	-.223,-3	.345,-3	-.233,-3	-.337,-3	-.994,-4
51	.208,-3	.356,-3	.149,-3	.208,-3	-.314,-3	-.344,-3	.446,-3	-.239,-3	-.170,-4	.130,-3
52	.211,-3	-.528,-4	.320,-3	.576,-5	-.789,-4	-.452,-3	.322,-3	-.462,-3	-.266,-3	.403,-3
53	.678,-3	-.260,-3	.823,-4	.433,-3	-.190,-4	-.573,-3	.187,-3	-.645,-3	-.386,-3	.110,-2
54	.686,-3	-.165,-3	-.351,-3	.598,-3	-.124,-3	-.629,-3	-.294,-3	-.302,-3	-.234,-3	.488,-3
55	.551,-3	.102,-3	.305,-4	.203,-3	.205,-3	-.193,-3	-.536,-3	-.234,-3	-.248,-4	-.172,-3
56	.152,-3	.124,-3	.755,-4	-.309,-3	.283,-3	-.756,-4	-.345,-3	-.281,-3	-.107,-3	.556,-4
57	.231,-3	-.534,-4	-.206,-3	-.369,-3	.457,-4	-.407,-3	.702,-4	-.877,-4	-.924,-5	.152,-3
58	.305,-3	-.255,-4	-.449,-4	-.223,-4	-.512,-4	-.440,-3	.121,-4	.156,-3	.106,-3	-.140,-3
59	.985,-4	.991,-4	-.138,-3	.123,-3	.138,-3	-.129,-3	-.249,-3	.265,-3	.145,-3	-.333,-3
60	.000	.000	.000	.000	.000	.000	.000	.000	.000	.000

Run No. 43 ; v component

Separation Distance (r.)

Y	0	12	18	24	30	42	54	72	84	90
00	.000	.000	.000	.000	.000	.000	.000	.000	.000	.000
01	.125,-1	.301,-1	.438,-1	.561,-1	.756,-1	.109	.751,-1	.929,-1	.105	.135
02	.870,-2	.296,-1	.416,-1	.516,-1	.700,-1	.973,-1	.928,-1	.101	.953,-1	.117
03	.445,-2	.139,-1	.198,-1	.414,-1	.434,-1	.485,-1	.500,-1	.445,-1	.379,-1	.437,-1
04	.690,-2	.809,-2	.143,-1	.241,-1	.206,-1	.226,-1	.203,-1	.136,-1	.618,-2	.729,-2
05	.639,-2	.147,-1	.209,-1	.291,-1	.222,-1	.201,-1	.101,-1	-.535,-2	-.511,-2	-.339,-2
06	.519,	.170,-1	.199,-1	.264,-1	.203,-1	.169,-1	.458,-2	-.168,-1	-.103,-1	-.637,-2
07	.544,-	.135,-1	.151,-1	.154,-1	.548,-2	.962,-2	-.270,-2	-.982,-2	-.328,-2	-.407,-3
08	.468,-2	.976,-2	.124,-1	.903,-2	.350,-2	.443,-2	-.101,-2	-.826,-3	-.781,-3	-.102,-2
09	.502,-2	.711,-2	.996,-2	.509,-2	.268,-2	-.442,-3	-.957,-3	.201,-2	.339,-3	-.605,-3
10	.526,-2	.356,-2	.402,-2	.252,-2	.771,-3	-.202,-2	-.388,-2	.128,-2	.527,-3	-.196,-4
11	.269,-2	.421,-2	.478,-2	.316,-2	-.140,-2	-.144,-2	-.411,-2	.727,-4	.209,-2	.104,-2
12	.330,-2	.527,-2	.555,-2	.241,-2	-.327,-2	-.528,-2	-.261,-2	-.387,-2	.165,-2	.251,-3
13	.372,-2	.468,-2	.478,-2	-.233,-4	-.255,-2	-.291,-2	-.275,-2	-.178,-2	.178,-2	-.130,-2
14	.330,-2	.283,-2	.421,-2	-.699,-3	-.532,-2	-.307,-2	-.248,-2	.173,-2	.117,-2	-.148,-2
15	.207,-2	.387,-2	.372,-2	.321,-3	-.175,-2	-.267,-2	-.354,-3	.038,-4	.200,-3	.408,-3
16	.152,-2	.151,-2	.201,-2	.876,-3	-.254,-3	-.106,-2	.130,-2	-.102,-2	.343,-3	-.425,-3
17	.144,-2	.988,-3	.121,-2	.134,-2	.269,-3	-.401,-3	.177,-2	-.136,-2	.441,-3	-.562,-3
18	.134,-2	.153,-2	.615,-3	.299,-3	.857,-4	.255,-3	.240,-2	-.383,-3	.106,-2	.912,-3
19	.122,-2	.173,-2	.311,-3	-.107,-2	.230,-3	.906,-3	.120,-2	-.494,-3	.713,-3	.365,-3
20	.139,-2	.111,-2	-.586,-3	-.158,-2	.169,-3	-.105,-3	.143,-2	-.336,-3	-.125,-2	-.938,-3
21	.170,-2	.148,-2	-.403,-3	-.138,-2	.368,-3	-.529,-3	.182,-2	.189,-3	-.124,-2	-.853,-3
22	.712,-3	.102,-2	-.309,-3	-.157,-2	.432,-3	-.448,-3	.400,-3	.655,-4	-.525,-3	-.154,-2
23	.576,-3	.305,-3	-.161,-3	-.250,-2	.101,-2	.625,-3	.663,-3	-.103,-2	.641,-4	-.933,-3
24	.113,-2	-.148,-3	-.266,-4	-.144,-2	.507,-3	.740,-3	.836,-3	-.484,-3	.117,-3	-.389,-3
25	.537,-3	.108,-3	.408,-3	-.299,-3	.426,-3	.675,-3	.329,-3	-.936,-3	.705,-3	.497,-3
26	.800,-3	-.205,-3	-.680,-3	-.144,-3	-.291,-3	-.752,-3	.117,-3	-.155,-2	.458,-3	-.210,-3
27	.114,-2	-.449,-3	-.803,-3	-.228,-3	-.104,-3	-.121,-2	-.471,-3	-.693,-3	.160,-3	-.445,-3
28	.116,-2	-.138,-3	-.556,-4	-.423,-3	-.263,-3	-.116,-2	-.563,-3	-.769,-3	-.113,-3	.206,-4
29	.139,-2	.191,-3	.263,-3	.260,-3	.304,-3	-.602,-3	-.312,-3	-.375,-3	-.527,-3	.471,-3
30	.140,-2	.514,-4	-.231,-3	.224,-3	.172,-3	.284,-3	.393,-3	.106,-3	-.300,-3	.329,-3
31	.106,-2	.167,-3	-.353,-3	.293,-3	.452,-3	-.657,-3	.263,-3	.278,-3	-.985,-3	.242,-3
32	.133,-2	-.720,-3	-.144,-2	.461,-3	.347,-3	-.101,-2	.120,-3	.689,-3	-.664,-3	.255,-3
33	.129,-2	-.542,-3	-.161,-2	.814,-4	.833,-4	-.471,-3	.594,-3	.756,-3	-.299,-3	.172,-3
34	.868,-3	-.420,-3	-.869,-3	-.420,-3	.226,-3	-.300,-3	.638,-3	.772,-3	-.287,-3	.261,-4
35	.436,-3	-.758,-4	-.152,-3	-.367,-3	-.700,-4	-.630,-3	-.595,-4	.117,-2	-.191,-3	.265,-3
36	.495,-3	.931,-4	-.103,-3	.694,-3	-.240,-3	-.960,-3	-.397,-3	.670,-3	.536,-4	-.127,-3
37	.976,-3	-.563,-3	.523,-3	.974,-3	-.152,-3	-.754,-3	-.491,-3	.461,-3	.466,-3	-.469,-4
38	.136,-2	-.107,-2	.632,-3	.820,-4	-.285,-3	-.202,-3	-.118,-3	.291,-3	.732,-3	.405,-3
39	.124,-2	-.145,-3	.360,-4	-.563,-3	-.631,-3	.284,-3	.144,-3	-.407,-3	.560,-3	.427,-3
40	.107,-2	-.475,-4	-.242,-3	-.144,-3	-.613,-3	-.183,-3	-.186,-4	-.897,-3	.257,-3	-.415,-3
41	.755,-3	-.646,-3	-.335,-3	-.204,-4	-.750,-3	-.415,-3	-.569,-3	-.454,-3	.330,-3	.611,-3
42	.343,-3	-.422,-3	-.544,-3	-.488,-4	-.364,-3	.184,-3	-.235,-3	.133,-3	.304,-3	.268,-4
43	.431,-3	-.353,-3	.132,-3	.337,-3	-.387,-3	.251,-3	.511,-3	.656,-3	.514,-3	-.339,-4
44	.392,-3	-.355,-3	.986,-4	.335,-3	.431,-3	-.279,-3	.528,-3	.455,-3	.447,-3	.309,-3
45	.467,-4	.545,-4	-.790,-3	-.154,-3	.775,-3	.959,-4	-.456,-3	-.500,-3	.133,-3	.259,-3
46	-.136,-3	.102,-3	-.744,-3	-.300,-3	.314,-3	.190,-3	-.381,-3	-.378,-3	.340,-3	-.122,-3
47	-.565,-4	-.146,-3	-.135,-3	-.855,-4	.404,-3	.405,-3	-.508,-3	.915,-4	.378,-3	.124,-3
48	.314,-3	-.414,-3	-.254,-3	-.114,-3	.839,-3	.182,-3	-.501,-3	.500,-3	-.145,-4	.323,-3
49	.685,-3	-.143,-3	.545,-4	-.402,-3	.648,-3	-.247,-3	-.301,-3	.175,-3	-.320,-3	-.835,-4
50	.966,-3	-.365,-4	.622,-3	-.356,-3	-.200,-3	.128,-4	-.450,-4	-.204,-3	-.662,-3	-.708,-3
51	.782,-3	-.261,-3	.462,-3	.550,-3	-.262,-3	.508,-3	-.626,-4	.601,-4	-.475,-3	-.476,-3
52	.161,-3	.447,-4	-.132,-7	.154,-3	.205,-3	.496,-3	.145,-3	-.103,-3	-.524,-3	-.462,-3
53	-.162,-4	.111,-3	.144,-3	-.634,-3	.397,-3	.148,-3	.503,-3	.399,-4	-.552,-3	-.539,-3
54	-.188,-3	.169,-3	.127,-3	-.129,-3	.118,-3	-.363,-4	.910,-3	.357,-3	-.399,-3	-.409,-3
55	-.194,-3	.652,-4	-.262,-3	.621,-3	.108,-4	.632,-4	.599,-3	.194,-3	.129,-3	-.230,-3
56	-.145,-3	.417,-4	-.153,-3	.487,-3	.215,-4	-.131,-3	.203,-3	.652,-4	.235,-3	-.749,-3
57	.356,-4	.333,-3	-.749,-4	-.635,-4	-.654,-4	-.304,-3	-.704,-4	-.210,-3	.290,-3	-.387,-3
58	.776,-4	.545,-3	-.322,-3	-.102,-3	.133,-3	-.300,-4	-.322,-3	-.467,-3	.102,-2	-.423,-3
59	-.218,-3	.453,-3	-.132,-3	-.532,-4	.111,-3	-.935,-3	-.867,-4	.129,-3	.115,-2	-.728,-4
60	.000	.000	.000	.000	.000	.000	.000	.000	.000	.000

Run No. 45 ; u component

	Separation Distance (m.)								
N	1	4	5	16	20	21	64	80	84	85
00	.000				.000	.000	.000		.000	.000
01	.431,-2				-.109,-1	-.963,-2	-.130,-1		-.326,-2	-.323,-2
02	.914,-2				-.469,-4	.359,-2	-.227,-1		-.714,-2	-.651,-2
03	.244,-2				-.270,-3	.242,-2	-.765,-2		.227,-3	.678,-2
04	-.389,-2				.870,-3	.160,-2	.540,-2		.675,-2	.134,-1
05	-.289,-2				.158,-2	.109,-2	.789,-2		.717,-2	.803,-2
06	-.230,-2				-.241,-2	-.213,-2	-.558,-4		.223,-2	.182,-3
07	-.993,-3				-.259,-2	-.134,-2	-.329,-2		-.671,-2	-.564,-2
08	.201,-2				.209,-2	.259,-2	.514,-2		-.684,-2	-.744,-2
09	.199,-2				.544,-2	.384,-2	.347,-2		-.285,-2	-.258,-2
10	-.162,-2				.116,-2	-.254,-2	.313,-3		-.381,-2	-.152,-2
11	-.264,-2				-.822,-3	-.260,-2	.170,-2		-.148,-2	-.138,-2
12	-.265,-2				.947,-3	.866,-3	.262,-2		-.161,-2	-.240,-2
13	-.132,-2				.183,-2	.874,-3	.744,-3		-.944,-3	.155,-2
14	-.644,-3				.797,-3	.410,-3	.764,-3		-.342,-3	.280,-2
15	-.978,-3				-.134,-2	-.163,-3	.481,-3		.934,-3	.286,-2
16	-.212,-2				-.143,-2	-.791,-3	-.322,-3		.195,-2	.108,-2
17	-.307,-2				-.346,-3	-.[illegible]7,-3	-.684,-3		.246,-3	.267,-3
18	-.121,-2				.151,-2	-.185,-3	.764,-3		-.737,-3	-.734,-3
19	-.105,-2				.169,-2	.216,-3	-.622,-4		-.117,-2	-.113,-2
20	-.139,-2				.125,-2	.344,-3	-.557,-3		-.833,-4	-.933,-3
21	-.225,-2				.880,-3	.228,-3	.833,-3		.120,-2	-.221,-3
22	-.187,-2				.113,-2	.102,-2	.114,-2		-.992,-3	-.124,-2
23	-.181,-2				.127,-2	.180,-2	-.613,-3		-.141,-2	-.109,-2
24	-.247,-2				.853,-5	.215,-3	-.129,-2		.967,-3	-.138,-2
25	-.166,-2				-.767,-3	-.225,-3	.159,-3		.141,-2	-.174,-2
26	-.685,-3				-.120,-2	.942,-3	.735,-4		.119,-2	-.593,-3
27	-.851,-3				.233,-4	.773,-3	-.139,-2		.133,-2	.147,-2
28	-.138,-2				.227,-3	.248,-3	-.782,-3		.157,-2	.108,-2
29	-.894,-3				-.134,-3	.416,-3	-.109,-4		.141,-2	.541,-3
30	-.267,-3				-.930,-5	-.489,-3	.682,-3		-.583,-3	-.279,-4
31	-.167,-3				.360,-3	-.360,-3	.362,-3		-.146,-2	-.966,-3
32	-.492,-3				.616,-3	.359,-4	-.112,-2		-.104,-2	-.781,-3
33	-.554,-3				-.687,-5	-.950,-4	-.913,-3		.534,-3	.473,-3
34	.195,-3				-.586,-3	-.543,-4	-.861,-4		.832,-3	.230,-3
35	.585,-3				-.304,-3	.976,-3	.193,-4		-.167,-3	-.121,-2
36	-.212,-3				.151,-3	.120,-2	.107,-3		-.927,-3	-.194,-2
37	-.344,-3				.126,-4	.730,-3	.618,-3		-.301,-3	-.364,-3
38	-.469,-3				-.448,-3	-.275,-3	.157,-2		-.508,-3	.117,-3
39	-.642,-3				-.266,-3	-.115,-2	.129,-2		-.747,-3	-.188,-3
40	-.385,-3				.219,-4	-.925,-3	.496,-3		-.447,-3	-.237,-3
41	-.318,-3				.162,-3	-.142,-3	.640,-3		-.612,-3	-.695,-3
42	-.871,-3				.279,-3	.700,-3	.506,-3		-.420,-3	-.564,-3
43	-.117,-2				.546,-3	.642,-3	.260,-3		.494,-3	.280,-4
44	-.354,-3				.863,-3	.105,-2	.516,-3		.448,-5	-.422,-3
45	-.206,-3				-.158,-3	.182,-3	-.116,-3		-.241,-3	-.192,-3
46	-.251,-3				-.731,-3	-.673,-3	-.924,-3		.493,-3	.934,-3
47	-.196,-5				-.354,-3	-.117,-2	-.125,-2		.863,-3	.151,-2
48	-.419,-3				-.317,-3	-.124,-2	-.200,-2		.651,-3	.882,-3
49	-.580,-3				-.574,-3	-.862,-3	-.129,-2		-.215,-3	.427,-3
50	-.175,-3				-.511,-4	-.839,-3	.431,-3		-.894,-3	.684,-3
51	-.628,-3				.143,-3	-.762,-4	.802,-3		-.261,-3	.136,-2
52	-.768,-3				.359,-3	.236,-3	.273,-3		.169,-3	.135,-2
53	-.456,-3				.708,-3	.224,-3	-.841,-4		.813,-4	.407,-3
54	-.441,-3				.100,-2	.105,-3	.204,-4		.374,-4	-.117,-3
55	-.593,-3				.432,-3	-.354,-3	-.102,-4		.308,-3	-.156,-3
56	-.405,-3				-.385,-4	-.427,-3	.359,-3		.547,-3	-.257,-4
57	.189,-3				.513,-3	-.352,-4	-.244,-3		.233,-3	.236,-3
58	.501,-3				.744,-3	.276,-3	-.144,-2		.316,-3	.968,-3
59	.319,-3				.502,-3	.581,-4	-.691,-3		.578,-3	.694,-3
60	.000				.000	.000	.000		.000	.000

Run No. 45 ; v component

Separation Distance (m.)

M	1	4	5	16	20	21	64	80	84	85
00	.000				.000	.000	.000		.000	.000
01	-.423,-3				.618,-2	.550,-2	-.316,-2		.937,-2	.107,-1
02	-.281,-2				-.349,-3	-.143,-2	-.374,-2		-.104,-2	.247,-4
03	-.305,-2				-.154,-2	-.125,-2	.237,-3		.389,-2	.262,-2
04	-.173,-2				-.323,-2	-.243,-2	.778,-3		.301,-2	.341,-2
05	-.158,-2				-.213,-2	-.235,-2	-.137,-2		.971,-3	.246,-2
06	-.172,-2				-.310,-2	-.298,-2	-.464,-2		-.351,-2	-.252,-2
07	-.224,-3				-.752,-3	.339,-3	-.178,-2		-.388,-2	-.268,-2
08	.194,-3				.194,-2	.218,-2	.128,-2		-.160,-2	-.573,-3
09	.187,-3				.328,-2	.281,-2	.105,-2		-.470,-3	-.135,-3
10	-.158,-2				.997,-3	.102,-2	.685,-3		-.525,-3	-.116,-2
11	-.250,-2				.506,-3	.130,-2	.218,-2		.110,-2	.377,-4
12	-.183,-2				.420,-3	.333,-3	.168,-2		.724,-3	.805,-3
13	-.188,-2				.958,-4	.218,-3	.122,-2		.125,-2	.164,-2
14	-.175,-2				-.536,-3	-.405,-4	.324,-3		.384,-3	.407,-3
15	-.141,-2				.432,-3	.741,-3	.349,-3		.799,-3	.105,-2
16	-.128,-2				.861,-3	.141,-2	.648,-4		.938,-3	.116,-2
17	-.221,-2				.506,-3	.112,-2	.606,-3		.179,-2	.853,-3
18	-.288,-2				.613,-3	.261,-3	.697,-3		.184,-2	.458,-3
19	-.258,-2				.744,-3	.840,-4	.557,-3		.212,-2	.190,-2
20	-.253,-2				-.626,-3	-.595,-3	-.492,-3		.630,-3	.131,-2
21	-.254,-2				-.621,-3	-.471,-3	-.561,-3		.898,-3	.399,-3
22	-.172,-2				-.242,-3	-.603,-3	-.222,-3		.159,-2	.230,-3
23	-.330,-3				-.995,-4	.128,-3	-.349,-3		.144,-2	.126,-3
24	-.330,-3				-.378,-3	-.598,-4	-.885,-3		.696,-3	-.446,-3
25	-.162,-2				.326,-4	.121,-3	-.129,-2		.191,-2	-.243,-3
26	-.196,-2				.187,-3	.661,-3	-.113,-2		.107,-2	-.520,-3
27	-.122,-2				-.857,-4	.117,-3	.689,-3		.471,-3	-.307,-3
28	-.122,-2				-.639,-3	-.115,-2	.107,-2		.455,-3	-.610,-3
29	-.833,-3				-.189,-3	-.813,-3	.386,-3		.714,-3	-.595,-3
30	-.897,-3				-.258,-3	-.123,-3	-.706,-4		.999,-3	.137,-3
31	-.609,-3				-.221,-3	-.501,-4	.168,-3		.776,-3	.187,-4
32	-.250,-3				.434,-3	-.751,-4	-.758,-4		.372,-3	-.400,-3
33	-.718,-3				.787,-3	-.281,-4	-.164,-3		-.119,-3	-.215,-3
34	-.118,-2				.392,-3	-.734,-4	.243,-3		-.131,-2	-.375,-3
35	-.509,-3				.474,-3	-.246,-3	.130,-2		-.122,-2	.511,-3
36	-.151,-3				.603,-3	-.322,-3	.367,-3		-.205,-3	.914,-3
37	-.739,-3				.839,-3	-.368,-3	-.444,-3		.754,-3	.401,-3
38	-.151,-3				.580,-3	-.777,-3	-.106,-3		.113,-2	-.145,-3
39	-.138,-2				.119,-3	.242,-3	-.270,-3		.422,-3	-.345,-3
40	-.472,-3				-.987,-4	.823,-3	-.396,-3		-.886,-3	-.525,-3
41	-.369,-3				-.405,-3	-.153,-3	.212,-3		-.628,-3	-.313,-3
42	-.784,-3				-.435,-3	-.527,-3	-.106,-3		.329,-3	-.539,-4
43	-.29 -3				-.235,-3	-.232,-3	-.296,-4		.598,-3	.227,-4
44	-.207,-3				-.246,-3	-.262,-4	-.950,-4		.599,-3	-.956,-4
45	-.128,-2				.175,-3	-.807,-4	-.787,-3		.366,-3	.486,-3
46	-.109,-2				.379,-3	-.297,-3	-.414,-3		-.214,-3	.900,-3
47	-.752,-3				.659,-3	-.224,-3	-.584,-4		-.104,-3	-.270,-3
48	-.119,-2				.702,-3	-.556,-3	-.550,-3		.695,-4	-.159,-2
49	-.104,-2				.330,-3	-.330,-3	-.627,-3		.470,-3	-.112,-2
50	-.607,-3				-.210,-5	.581,-3	-.415,-4		.435,-3	-.302,-3
51	.409,-4				-.349,-4	.191,-3	.180,-3		.227,-3	.495,-4
52	.436,-3				-.367,-3	-.787,-4	.162,-3		.116,-3	.473,-3
53	.525,-3				-.534,-3	-.158,-4	.327,-4		.277,-3	.743,-3
54	.159 -3				-.415,-3	.291,-4	-.478,-3		.577,-3	.371,-3
55	.111,-3				.219,-3	.376,-3	-.627,-3		-.703,-4	.492,-3
56	.223,-3				.634,-3	.105,-2	-.158,-3		-.184,-3	.485,-3
57	.281,-3				.669,-3	.514,-3	.218,-3		.389,-3	-.378,-3
58	.430,-3				.391,-4	-.237,-3	-.832,-4		.406,-3	-.572,-3
59	.342,-3				-.121,-3	.211,-4	-.380,-3		.647,-3	-.536,-4
60	.000				.000	.000	.000		.000	.000

Run No. 46 : u component

	Separation Distance (m.)									
N	6	12	18	24	36	42	48	72	84	90
00	.000	.000	.000	.000	.000	.000	000	.000	.000	.000
01	.434,-2	-.716,-2	-.444,-2	.896,-2	-.124,-1	-.165,-2	-.143,-1	.103,-1	-.384,-3	-.810,-2
02	.554,-2	.377,-2	-.530,-2	.108,-1	-.143,-2	.207,-1	-.324,-1	.512,-2	-.827,-2	-.145,-1
03	.123,-1	.140,-1	.504,-2	-.315,-2	-.469,-2	.138,-1	-.175,-1	.229,-2	-.506,-2	-.196,-2
04	.764,-2	.279,-2	-.132,-2	-.892,-2	-.315,-2	-.912,-2	-.512,-3	.226,-2	.432,-2	.206,-2
05	.355,-2	.642,-2	.186,-2	-.103,-1	-.807,-2	-.930,-2	-.300,-2	.388,-2	.535,-2	.320,-2
06	-.398,-2	.993,-2	.358,-2	-.521,-2	-.761,-2	-.398,-2	-.511,-2	.478,-2	-.355,-2	.323,-2
07	-.552,-2	.632,-2	-.403,-3	-.402,-2	-.244,-2	-.283,-3	.253,-2	-.913,-3	-.114,-1	.328,-2
08	-.510,-2	.189,-3	-.314,-2	-.629,-2	-.352,-2	-.176,-2	.380,-2	-.509,-2	-.619,-2	.249,-2
09	-.363,-2	-.164,-2	-.191,-2	-.599,-2	-.391,-2	-.102,-2	.149,-2	-.277,-2	.623,-3	.326,-2
10	-.109,-2	.485,-3	-.443,-2	-.933,-3	.235,-3	.111,-2	-.254,-2	.328,-2	.463,-2	.362,-2
11	-.989,-3	.292,-2	-.309,-2	-.199,-3	.738,-4	.257,-2	-.325,-2	.612,-2	.620,-2	.299,-2
12	-.193,-2	.312,-2	-.173,-2	-.134,-3	.237,-2	.373,-2	-.122,-3	.266,-2	.438,-2	.114,-2
13	-.258,-2	.195,-2	-.309,-2	-.592,-3	.275,-2	.276,-2	.113,-2	.760,-3	.250,-2	.128,-2
14	-.177,-2	.155,-2	-.347,-2	.699,-3	.118,-2	-.965,-3	.115,-2	.856,-3	.670,-3	.294,-2
15	.186,-2	.148,-2	-.139,-2	.537,-3	-.387,-3	.526,-3	.245,-2	.113,-2	-.792,-3	.399,-2
16	.428,-2	.936,-3	-.708,-3	.126,-2	.197,-2	.149,-2	-.265,-3	.121,-2	-.271,-3	.304,-2
17	.340,-2	.290,-2	-.204,-2	.592,-3	.383,-2	.129,-2	-.332,-2	.743,-3	.153,-2	.367,-2
18	.112,-2	.202,-2	-.406,-2	-.849,-3	.257,-2	.121,-3	-.125,-2	.523,-3	.173,-2	.177,-2
19	.423,-3	.972,-3	-.244,-2	-.116,-2	.110,-2	-.166,-2	.319,-3	.800,-3	.832,-3	.251,-3
20	.161,-2	-.549,-3	-.294,-3	.407,-3	.114,-2	-.849,-4	-.461,-3	.595,-3	.846,-3	.226,-2
21	.144,-2	-.121,-2	.915,-3	.131,-3	.583,-3	.365,-3	-.862,-4	.853,-3	.188,-2	.295,-2
22	-.679,-3	-.846,-3	-.154,-3	.429,-5	-.145,-3	-.360,-3	-.652,-3	.756,-3	.883,-3	.118,-2
23	-.152,-2	.939,-5	-.694,-3	-.929,-3	-.620,-3	-.807,-3	-.323,-3	-.188,-3	-.661,-4	.761,-3
24	-.171,-2	.332,-3	-.970,-3	-.908,-3	-.452,-3	-.120,-2	.215,-4	-.282,-4	.221,-3	.515,-3
25	-.202,-3	.290,-3	-.101,-3	-.344,-3	.120,-3	-.320,-3	-.614,-3	.371,-3	.116,-2	-.102,-2
26	.139,-2	-.658,-3	-.258,-3	.192,-3	.793,-3	-.197,-3	-.280,-2	-.343,-3	.131,-2	-.140,-2
27	.901,-3	-.116,-2	.387,-4	.205,-3	.812,-3	-.431,-3	-.133,-2	-.243,-5	.102,-3	-.690,-3
28	-.602,-3	-.120,-2	-.177,-3	.546,-3	.802,-3	.517,-3	.223,-3	-.201,-3	-.841,-3	.241,-3
29	-.222,-3	-.170,-4	.258,-3	.325,-3	.906,-3	.780,-3	-.940,-3	-.661,-3	-.247,-3	.455,-3
30	.329,-4	.195,-3	.314,-4	-.480,-4	.125,-2	.217,-3	-.651,-3	.253,-4	-.775,-3	.542,-3
31	-.691,-4	.429,-3	.153,-4	-.294,-3	.520,-4	.193,-3	.477,-3	.431,-3	-.482,-3	.393,-3
32	.161,-3	.110,-2	-.291,-4	-.410,-3	.347,-3	.606,-3	.200,-3	-.507,-3	-.169,-3	-.729,-3
33	.196,-3	.121,-2	.679,-3	-.156,-2	.678,-3	.621,-3	-.121,-2	-.135,-3	.273,-3	-.103,-2
34	-.260,-3	-.144,-4	.814,-3	-.623,-3	.375,-3	.617,-3	-.162,-2	-.127,-3	-.670,-3	-.280,-3
35	-.375,-3	-.297,-4	.609,-3	.277,-3	-.208,-3	.117,-2	-.124,-2	-.885,-3	-.941,-3	-.423,-3
36	-.601,-3	.310,-3	-.122,-2	.221,-3	-.221,-3	.107,-2	-.106,-2	-.987,-3	-.502,-3	-.507,-3
37	-.882,-3	.727,-3	-.160,-2	.172,-3	.341,-4	.238,-3	-.554,-3	-.773,-3	-.831,-3	.419,-3
38	-.677,-3	.541,-3	-.307,-3	.383,-3	.325,-3	-.601,-3	-.213,-3	-.217,-3	-.830,-3	-.188,-3
39	-.572,-3	.281,-3	-.935,-4	.416,-3	.157,-3	-.686,-3	.489,-3	.223,-3	-.621,-3	-.587,-3
40	-.549,-3	.209,-3	-.360,-3	.488,-3	-.124,-3	-.355,-3	.801,-3	.111,-3	-.614,-3	.231,-3
41	-.464,-3	-.420,-4	-.204,-3	.409,-3	-.283,-3	-.585,-3	.736,-3	-.420,-3	.548,-4	.340,-3
42	-.260,-3	-.613,-3	-.453,-4	.217,-3	.156,-3	-.500,-3	.352,-3	-.129,-3	.688,-3	-.827,-4
43	.178,-3	-.358,-3	365,-3	-.112,-3	.632,-3	.376,-3	-.123,-4	-.560,-4	.408,-3	.884,-4
44	.202,-3	-.554,-4	87,-3	.613,-5	.345,-3	.566,-3	-.366,-4	-.462,-3	-.275,-3	-.245,-3
45	.301,-3	.176,-4	.529,-3	.337,-3	-.475,-3	.392,-3	-.281,-3	-.510,-3	-.705,-3	-.147,-3
46	.188,-4	-.260,-4	.776,-4	.577,-3	-.338,-3	.500,-3	-.115,-3	-.367,-3	-.145,-3	-.497,-3
47	-.287,-3	.121,-3	-.122,-3	.142,-3	.133,-3	.456,-3	.236,-3	-.382,-3	-.283,-3	-.486,-3
48	-.355,-3	.147,-3	-.308,-3	.405,-3	.155,-3	.153,-3	.180,-4	-.129,-3	-.630,-3	-.292,-3
49	-.223,-3	.202,-3	-.369,-3	.432,-3	-.217,-3	-.758,-4	-.140,-3	-.146,-3	-.610,-3	-.414,-3
50	-.270,-3	.188,-3	-.368,-3	.116,-3	-.232,-3	-.316,-3	-.454,-4	.235,-3	-.526,-3	-.260,-3
51	-.370,-3	.237,-3	-.216,-3	-.586,-4	.198,-4	-.120,-3	.300,-3	.530,-3	-.108,-3	-.546,-4
52	-.293,-3	.137,-3	.566,-4	-.101,-3	.444,-3	.184,-3	.177,-3	.397,-3	.254,-3	.184,-3
53	.222,-3	.134,-3	.270,-3	.208,-4	.744,-3	.382,-3	-.490,-3	-.213,-3	.908,-3	.621,-3
54	.974,-3	.183,-3	-.153,-3	.289,-3	.751,-3	.577,-3	.192,-4	-.769,-3	.129,-2	.692,-3
55	.815,-3	-.273,-3	-.549,-3	.337,-3	.397,-3	.254,-3	.543,-3	-.546,-3	.830,-3	.293,-3
56	.387, 3	-.673,-3	-.398,-3	-.290,-3	.280,-3	.146,-3	.646,-3	-.904,-3	.854,-3	-.766,-4
57	.410,-3	-.731,-3	-.322,-4	-.413,-3	.103,-3	-.304,-3	.742,-3	-.751,-3	.573,-3	-.118,-3
58	.536,-3	-.273,-3	.947,-4	.152,-4	.130,-3	-.266,-3	.392,-3	.535,-4	.313,-3	.195,-3
59	.412,-3	.142,-3	.432,-3	.249,-3	.274,-3	-.455,-4	-.199,-4	.495,-3	.662,-3	.390,-3
60	.000	.000	.000	.000	.000	.000	.000	.000	.000	.000

Run No. 46 ; v component

Separation Distance (r.)

j	6	12	18	24	30	42	48	72	84	90
00	.000	.000	.000	.000	.000	.000	.000	.000	.000	.000
01	.232,-2	.691,-3	.111,-2	.326,-2	-.124,-3	.523,-3	.526,-2	.635,-2	.774,-3	.522,-2
02	.829,-4	.253,-2	.305,-3	.198,-2	-.421,-3	-.260,-2	.231,-2	.316,-2	.201,-2	.383,-2
03	-.412,-3	.156,-2	-.151,-2	.604,-3	-.301,-2	-.367,-2	.437,-3	.155,-	.263,-2	.301,-2
04	-.190,-2	.927,-3	-.708,-3	-.100,-2	-.294,-2	-.147,-2	-.104,-3	-.231,-3	.829,-4	.730,-3
05	-.542,-3	.252,-2	.146,-2	-.665,-3	-.708,-3	-.176,-3	.148,-2	.129,-2	-.779,-3	-.166,-2
06	.348,-3	.302,-2	.256,-2	-.975,-4	.101,-2	.427,-3	.126,-2	.587,-3	.447,-3	-.159,-2
07	.712,-3	.134,-2	.775,-3	-.115,-2	.950,-3	.491,-3	.263,-3	.493,-3	.114,-2	.861,-3
08	.591,-3	.129,-2	-.405,-3	-.173,-2	.843,-3	-.466,-3	-.122,-2	.129,-2	-.617,-3	-.211,-3
09	.471,-3	.679,-3	-.360,-3	-.742,-3	-.405,-3	-.844,-3	-.102,-2	.356,-4	-.139,-2	.940,-3
10	-.373,-3	-.500,-3	-.620,-3	-.686,-3	-.103,-2	-.181,-2	-.171,-3	.735,-4	-.866,-4	-.130,-3
11	-.220,-3	-.631,-4	-.940,-3	-.544,-3	.295,-3	-.962,-3	.135,-2	.296,-3	.104,-2	.333,-3
12	.109,-3	.151,-3	-.950,-3	-.433,-3	.141,-2	-.813,-4	.117,-2	-.121,-2	-.293,-3	.443,-3
13	.768,-3	-.646,-4	-.724,-3	.599,-3	.813,-3	-.474,-3	.295,-3	-.141,-2	-.311,-4	.407,-3
14	.146,-2	.111,-2	.275,-3	.979,-3	.975,-3	-.361,-3	-.193,-3	-.304,-3	.718,-3	-.243,-3
15	.103,-2	.120,-2	-.800,-5	.341,-3	.994,-3	.133,-3	-.612,-3	.595,-3	.227,-4	.604,-4
16	.904,-3	.554,-3	-.474,-4	-.298,-3	.132,-3	-.530,-4	-.471,-3	.127,-2	.365,-3	.224,-3
17	.559,-3	.390,-3	-.102,-3	-.254,-3	-.309,-3	-.405,-3	-.782,-3	.150,-2	.157,-3	.142,-2
18	.196,-3	.420,-3	-.193,-3	.771,-4	-.247,-3	-.157,-3	-.638,-3	.132,-3	-.936,-3	.107,-2
19	.111,-2	.951,-3	-.965,-3	.115,-4	-.331,-3	-.923,-3	-.295,-3	-.618,-3	-.624,-3	.235,-3
20	.139,-2	.523,-3	-.355,-3	-.618,-3	-.610,-3	.234,-3	.144,-3	-.695,-3	-.529,-3	-.525,-3
21	.345,-3	-.165,-3	-.673,-3	-.571,-3	-.372,-3	.640,-3	.396,-3	.620,-4	-.235,-3	-.943,-3
22	-.112,-3	-.101,-3	-.714,-3	-.552,-3	.237,-3	.111,-2	.139,-3	.361,-3	-.620,-4	-.128,-2
23	.344,-3	-.475,-3	-.144,-3	-.650,-3	.747,-3	.115,-2	-.132,-3	.548,-3	.509,-3	-.554,-4
24	-.270,-4	-.454,-3	-.695,-3	-.103,-2	.573,-3	.476,-3	-.591,-3	.150,-4	.620,-5	.325,-3
25	-.476,-3	.398,-4	-.135,-3	-.128,-2	.230,-3	.102,-3	-.932,-3	-.292,-3	-.226,-3	.391,-4
26	.231,-3	.537,-3	-.426,-3	-.285,-3	-.352,-4	-.207,-3	-.651,-3	-.119,-3	.340,-3	.330,-4
27	.205,-3	.440,-3	-.763,-3	-.551,-4	-.307,-3	-.123,-3	-.444,-3	.496,-3	.187,-3	-.331,-3
28	-.545,-3	.810,-4	-.521,-3	.733,-3	-.242,-3	-.723,-3	-.193,-3	.171,-3	.145,-3	-.105,-2
29	-.573,-3	-.301,-3	-.117,-2	.402,-3	.457,-3	-.707,-3	.272,-3	.261,-3	.125,-3	-.575,-3
30	.521,-3	-.247,-3	-.117,-2	-.552,-3	-.167,-3	.227,-3	.778,-3	.507,-3	-.101,-3	.130,-3
31	.504,-3	.331,-3	-.554,-3	-.939,-4	-.618,-3	.195,-3	.663,-4	.744,-3	.418,-3	.353,-3
32	.748,-4	.247,-3	-.441,-3	.345,-3	-.225,-3	-.339,-3	.137,-3	.759,-3	.416,-3	.739,-3
33	.612,-4	.219,-3	-.109,-3	.216,-3	-.573,-4	-.226,-3	.307,-3	.277,-3	-. 34,-3	.545,-3
34	-.347,-3	-.637,-4	-.263,-3	-.523,-3	-.592 -3	.359,-4	.127,-3	.293,-3	-.265,-3	.125,-3
35	.161,-3	-.610,-3	-.173,-3	-.439,-3	-.124,-2	.480,-4	.108,-3	.362,-4	-.206,-3	.291,-3
36	.437,-3	-.666,-4	.652,-3	-.825,-4	-.576,-3	-.359,-3	.143,-3	.803,-3	-.133,-3	.405,-3
37	.333,-4	.416,-3	.109,-2	-.373,-4	-.351,-4	-.767,-3	-.355,-3	.958,-3	-.389,-4	.556,-4
38	-.143,-3	.272,-3	.314,-3	-.791,-4	-.011,-3	-.693,-3	-.479,-3	.3.0,-3	-.354,-3	-.345,-4
39	.353,-3	.176,-3	-.401,-3	-.622,-4	-.153,-3	.969,-4	-.176,-3	.695,-3	-.633,-3	.119,-3
40	.433,-3	.103,-3	-.123,-3	-.483,-3	.134,-3	.943,-3	.103,-3	.914,-3	.634,-3	-.820,-4
41	.663,-4	-.427,-3	-.271,-3	-.408,-3	.271,-3	.349,-3	.293,-3	.357,-3	.945,-3	.787,-3
42	-.101,-3	-.256,-3	-.503,-3	- 44,-3	.573,-3	-.727,-3	.438,-3	.232,-3	.936,-4	.143,-2
43	.402,-3	.220,-4	-.579,-3	- 205,-3	.134,-3	-.930,-3	.345,-3	.425,-3	-.459,-3	.457,-3
44	.448,-3	.272,-3	-.676,-3	.267,-4	-.165,-3	-.135,-3	-.399,-3	-.121,-3	-.302,-3	.227,-3
45	.877,-4	.329,-3	-.720,-3	-.100,-4	-.231,-3	-.622,-4	-.682,-3	-.114,-3	.207,-3	-.118,-3
46	-.175,-3	.193,-3	-.432,-3	-.239,-3	-.131,-3	.244,-5	-.413,-3	-.200,-4	.412,-3	-.546,-3
47	-.370,-3	.292,-3	-.745,-4	.480,-4	.401,-5	.187,-3	.593,-5	.125,-3	.601,-4	-.257,-3
48	-.430,-3	.353,-3	.200,-3	.175,-3	.397,-3	-.109,-3	.920,-3	.158,-3	-.205,-3	.309,-3
49	-.230,-3	.211,-3	.556,-3	-.162,-3	.593,-3	-.976,-3	.474,-4	-.545,-3	.178,-3	.931,-3
50	.114,-3	-.747,-4	.107,-2	-.143,-3	.234,-4	-.781,-3	-.513,-3	-.121,-2	.193,-3	.582,-3
51	.876,-4	-.15 ,-3	.111,-2	.277 -3	-.224,-3	-.217,-3	-.637,-3	-.110,-2	-.631,-4	-.331,-4
52	-.671,-4	.876,-3	.295,-3	.268,-4	.400,-3	-.330,-3	-.431,-3	-.945,-4	-.232,-3	.861,-4
53	-.589,-4	.235,-3	.700,-3	-.153,-3	.474,-3	-.817,-3	-.205,-3	.155,-3	-.307,-5	.321,-3
54	.105,-3	-.358,-3	.369,-3	-.794,-4	-.175,-3	-.703,-3	-.464,-3	-.957,-4	.124,-3	.373,-4
55	-.683,-4	-.389,-3	.199,-3	-.145,-3	-.193,-3	-.577,-3	-.762,-3	-.151,-3	-.198,-3	-.713,-3
56	-.806,-3	.424,-3	.347,-4	-.117,-4	.440,-3	-.433,-3	-.714,-3	.636,-4	-.478,-3	-.599,-3
57	-.420,-3	.306,-3	.860,-4	.127,-4	.407,-3	.372,-3	-.550,-3	.216,-3	-.578,-4	-.547,-3
58	-.686,-4	-.533,-4	.234,-3	-.411,-4	-.220,-3	.459,-3	-.738,-3	-.434,-4	.444,-4	-.659,-3
59	-.114,-3	.511,-3	.589,-4	.482,-4	-.321,-3	-.366,-4	-.288,-3	-.213,-3	.205,-3	-.474,-3
60	.000	.000	.000	.000	.000	.000	.000	.000	.000	.000

Run No. 53 ; u component

Separati . Distance (m.)

N	1	4	5	16	20	21	64	80	84	85
00	.000	.000	.000	.000	.000	.000	.000	.000	.000	.000
01	-.017,-5	-.149,-4	.244,-4	.337,-3	.305,-3	.620,-3	.369,-5	-.393,-3	-.[illegible],-3	-.411,-3
02	.277,-3	.126,-3	-.214,-4	.171,-3	.256,-3	.254,-3	.469,-3	-.280,-3	.182,-3	-.932,-5
03	.545,-3	.500,-3	.184,-3	.120,-3	.145,-3	-.309,-3	.300,-3	-.125,-3	.109,-3	-.147,-3
04	.519,-3	.459,-3	.189,-3	.319,-3	.178,-3	-.206,-3	-.480,-5	.109,-3	.744,-4	-.179,-3
05	.368,-3	.116,-3	-.333,-4	.133,-3	.140,-3	.199,-3	-.207,-3	.660,-4	-.235,-5	-.186,-3
06	.341,-3	-.406,-4	.150,-3	-.311,-4	.270,-4	.326,-3	.762,-5	.955,-4	-.497,-4	-.165,-3
07	.183,-3	-.238,-4	.184,-3	.462,-4	-.119,-3	.190,-3	.918,-4	-.892,-4	-.105,-3	.138,-3
08	-.758,-5	-.349,-5	-.815,-4	.107,-3	-.245,-4	.101,-3	-.534,-4	-.715,-5	.313,-4	.176,-3
09	-.141,-3	-.300,-3	.100,-3	.776,-5	.410,-4	-.11[illegible],-3	-.218,-3	.339,-3	-.193,-4	.178,-3
10	-.158,-3	-.215,-3	.653,-4	-.239,-3	.653,-4	-.163,-3	.283,-4	-.695,-4	-.586,-4	.661,-4
11	-.[illegible]56,-4	-.483,-5	.213,-4	-.218,-3	.625,-4	.706,-4	-.347,-4	-.239,-3	-.793,-4	.214,-3
12	-.112,-3	-.781,-4	.217,-3	.824,-4	-.394,-4	.200,-3	-.147,-3	-.262,-3	.968,-5	.254,-3
13	-.106,-3	-.395,-4	.230,-5	.224,-3	-.131,-3	.181,-3	.545,-4	-.235,-3	.490,-4	-.468,-4
14	-.923,-4	.105,-3	.152,-3	.211,-3	-.437,-4	-.744,-4	.350,-3	-.268,-4	-.464,-4	-.[illegible]5,-5
15	-.778,-4	.570,-4	-.292,-3	.152,-3	.917,-4	-.145,-3	.497,-3	.578,-4	-.135,-3	.173,-3
16	.470,-5	.620,-4	-.798,-4	.212,-3	.113,-3	-.238,-3	.187,-3	.824,-4	-.120,-3	.193,-3
17	-.112,-3	.646,-4	.778,-4	.138,-3	.100,-3	-.313,-3	-.593,-4	.594,-4	-.606,-4	.155,-3
18	-.544,-4	.122,-3	.122,-3	.115,-3	-.472,-4	-.137,-3	.229,-4	.682,-4	-.118,-3	.193,-3
19	.920,-4	.199,-3	.387,-4	.127,-3	-.211,-3	-.244,-3	.961,-4	.979,-4	-.211,-3	.664,-4
20	.126,-3	.115,-3	-.110,-3	.865,-4	-.140,-3	-.134,-3	.547,-4	.278,-4	-.858,-4	.380,-4
21	.115,-3	.309,-5	-.859,-4	.659,-4	-.339,-5	-.629,-4	.726,-4	-.113,-3	-.195,-4	.145,-3
22	.705,-4	-.162,-3	.484,-5	.294,-4	.788,-4	-.848,-4	.126,-3	-.213,-3	-.115,-3	.137,-3
23	.334,-4	-.134,-3	-.114,-3	.133,-4	.974,-4	.150,-3	.559,-4	.595,-5	-.911,-4	-.100,-3
24	.565,-4	-.491,-4	-.332,-4	.763,-5	-.341,-4	.133,-3	.142,-4	.151,-3	-.364,-4	.590,-4
25	.121,-4	-.706,-4	-.110,-3	.155,-3	-.111,-3	-.473,-4	-.119,-3	-.438,-5	-.254,-4	.468,-4
26	-.224,-4	-.775,-4	-.155,-3	.164,-3	-.250,-4	-.520,-4	-.207,-3	-.301,-4	-.515,-4	.758,-4
27	-.262,-4	-.224,-4	-.197,-3	.135,-3	-.676,-4	.895,-5	-.826,-4	-.701,-4	-.138,-3	-.374,-4
28	-.127,-4	.762,-5	-.130,-3	.694,-4	-.120,-3	-.533,-4	.522,-4	-.626,-4	-.124,-3	-.143,-3
29	.560,-4	.366,-4	-.745,-4	-.189,-4	-.437,-5	-.150,-3	.558,-4	.957,-4	-.126,-3	-.153,-3
30	-.268,-4	-.243,-4	-.583,-4	-.331,-4	.428,-4	-.169,-3	.197,-3	.157,-3	.136,-4	-.168,-3
31	-.804,-4	-.149,-4	-.238,-4	.159,-3	-.363,-4	-.101,-3	.108,-3	-.391,-4	.575,-5	-.690,-4
32	-.100,-3	.324,-4	-.300,-4	.209,-3	-.765,-4	-.293,-4	.683,-5	-.718,-4	-.753,-4	.924,-4
33	-.340,-4	.529,-4	.485,-4	.142,-3	.351,-4	-.624,-4	.330,-5	-.653,-4	-.729,-4	.124,-3
34	.539,-4	.346,-4	.242,-4	-.958,-5	.281,-5	-.205,-4	.236,-5	-.905,-4	-.153,-4	-.545,-5
35	.103,-3	-.105,-4	.376,-4	-.665,-4	-.407,-4	.706,-5	.479,-4	-.349,-4	.262,-4	-.120,-4
36	.343,-4	.841,-5	.135,-3	-.431,-4	-.394,-5	-.269,-4	.118,-3	-.566,-4	.814,-4	.524,-4
37	-.220,-4	.139,-3	.180,-3	.251,-4	.751,-5	-.288,-4	.531,-4	-.104,-3	.739,-4	.740,-4
38	.426,-4	.120,-3	.979,-4	.403,-4	.223,-4	.164,-4	-.523,-4	-.268,-4	.123,-4	.200,-4
39	.570,-4	-.169,-4	.383,-4	.793,-4	.441,-4	.263,-4	-.605,-4	.495,-4	-.453,-5	-.921,-4
40	.232,-4	-.383,-4	.145,-3	.294,-4	.100,-3	-.772,-5	-.474,-4	.259,-4	.688,-5	-.122,-3
41	-.434,-4	.120,-4	.639,-4	-.984,-5	.549,-4	-.509,-5	-.508,-4	.431,-4	.318,-5	-.528,-4
42	-.930,-5	.375,-4	.608,-4	.365,-4	.019,-5	-.460,-4	-.411,-4	.380,-5	-.141,-4	.149,-6
43	.321,-4	.167,-4	.885,-4	.590,-4	-.944,-5	-.351,-4	-.385,-4	-.760,-5	-.173,-4	.176,-4
44	.167,-4	.214,-4	.661,-4	-.222,-4	-.609,-5	.333,-4	-.362,-4	.453,-4	-.248,-4	.179,-4
45	-.147,-4	.226,-4	.225,-4	-.325,-4	.279,-4	.438,-4	-.519,-4	.709,-5	.391,-4	-.217,-5
46	-.846,-6	.370,-4	-.177,-4	-.561,-4	.142,-4	.638,-5	-.830,-4	-.391,-4	.819,-4	.241,-4
47	.173,-4	.324,-4	-.291,-4	-.532,-4	-.633,-4	.240,-4	-.171,-3	-.558,-4	.379,-4	.141,-4
48	.394,-4	.289,-5	.299,-4	.293,-4	-.796,-5	-.121,-4	-.176,-5	-.448,-4	.973,-5	-.175,-4
49	.469,-5	.117,-4	.180,-4	.488,-4	.397,-4	.417,-4	-.770,-4	-.335,-4	-.486,-4	-.201,-4
50	-.710,-5	.219,-4	-.313,-4	.474,-5	.322,-4	.624,-4	-.117,-3	.370,-4	-.991,-4	-.513,-4
51	.448,-5	-.194,-4	-.640,-4	.293,-4	.199,-4	.255,-4	-.892,-4	.189,-4	-.898,-4	-.162,-4
52	-.113,-4	-.370,-6	-.709,-4	.477,-4	-.527,-5	-.602,-4	.810,-5	-.692,-4	-.563,-4	-.185,-4
53	.537,-5	.799,-6	-.166,-4	.236,-4	-.434,-4	-.122,-3	.149,-4	-.621,-4	-.385,-4	-.810,-4
54	.216,-4	-.354,-4	.159,-4	.541,-4	-.371,-4	-.496,-4	-.433,-4	-.403,-4	-.330,-4	-.348,-4
55	-.323,-4	-.360,-4	.401,-4	.630,-4	.116,-4	.233,-4	-.117,-3	-.331,-4	-.295,-4	-.528,-5
56	-.742,-4	-.469,-4	.271,-4	.975,-4	.259,-4	.725,-4	-.673,-4	-.403,-4	-.411,-4	-.329,-4
57	-.331,-4	-.515,-4	.174,-4	.803,-4	-.401,-5	.697,-4	-.777,-5	-.712,-4	-.259,-4	-.363,-4
58	-.121,-4	-.213,-4	.248,-4	.604,-4	-.280,-4	.444,-4	.184,-4	-.868,-4	-.200,-4	-.573,-5
59	-.483,-5	-.213,-4	.253,-4	.438,-4	-.215,-4	-.187,-4	.322,-4	-.262,-4	-.816,-5	.190,-4
60	.000	.000	.000	.000	.000	.000	.000	.000	.000	.000

Run No. 53 ; v component

N	Separation Distance (m.)									
	1	4	5	16	20	21	64	80	84	85
00	.000	.000	.000	.000	.000	.000	.000	.000	.000	.000
01	.324,-4	-.357,-4	-.399,-5	-.432,-4	-.101,-3	-.902,-4	-.385,-4	-.152,-4	-.487,-4	-.222.-4
02	-.124,-4	.340,-5	-.374,-5	-.129,-4	-.512,-4	-.631,-4	.262,-4	.646,-4	.274,-4	.722,-4
03	-.115,-4	.228,-4	-.711,-5	-.401,-4	-.902,-4	-.971,-4	-.174,-5	.691,-4	.192,-4	.400,-4
04	-.134,-4	.746,-5	-.447,-4	-.727,-4	-.836,-4	-.872,-4	-.216,-4	.796,-5	.225,-4	.416,-4
05	-.257,-4	-.106,-4	-.105,-3	-.106,-3	-.369,-4	-.136,-5	-.225,-4	-.464,-6	.909,-5	.286,-4
06	-.172,-4	-.118,-4	-.107,-3	-.123,-3	.305,-4	.736,-4	-.173,-4	.940,-4	.390,-4	.465,-4
07	.150,-4	-.237,-4	-.615,-4	-.369,-4	.468,-4	.613,-4	.393,-4	.718,-4	.255,-4	.245,-4
08	.500,-4	-.699,-4	-.134,-3	.355,-4	.660,-4	.910,-4	.185,-4	.492,-4	.395,-4	.892,-4
09	.405,-4	-.846,-4	-.151,-3	.377,-4	.849,-4	.106,-3	.892,-4	.285,-4	.425,-4	.130,-3
10	.186,-4	-.215,-4	-.561,-4	-.254,-5	.622,-4	.521,-4	-.845,-4	-.422,-4	.201,-4	.797,-4
11	.245,-4	.950,-5	-.439,-4	-.345,-4	.839,-5	-.212,-4	-.516,-4	-.858,-4	-.698,-6	-.745,-5
12	.590,-4	-.132,-4	-.635,-4	-.429,-4	-.291,-4	-.108,-3	-.668,-4	-.258,-4	-.187,-4	-.106,-3
13	.597,-4	-.371,-4	-.450,-4	-.213,-4	.244,-5	-.240,-4	-.267,-4	.185,-4	-.379,-5	-.594,-4
14	.280,-4	-.216,-4	-.205,-4	.127,-4	-.904,-6	.358,-4	-.160,-4	-.109,-4	.287,-4	-.205,-4
15	.348,-4	210,-4	.116,-4	.466,-4	-.561,-4	-.534,-4	-.434,-4	-.390,-4	.490,-4	-.241,-4
16	.474,-4	.134,-4	.449,-4	.366,-4	-.447,-4	-.104,-3	-.256,-4	-.457,-4	.340,-4	-.166,-4
17	.893,-5	-.516,-4	.245,-4	-.302,-4	-.572,-5	-.289,-5	-.223,-4	-.463,-4	-.664,-4	-.108,-3
18	-.970,-6	-.664,-4	.943,-5	-.498,-4	-.200,-4	.153,-4	.246,-4	-.571,-4	-.825,-4	-.825,-4
19	-.635,-5	-.484,-4	.189,-5	.906,-5	-.232,-4	.793,-5	.598,-4	-.434,-4	-.442,-4	-.622,-4
20	.379,-4	.152,-4	.160,-4	.548,-4	-.108,-4	.354,-4	.101,-4	-.445,-4	.574,-6	-.188,-5
21	.668,-4	.576,-4	.655,-4	-.141,-4	-.441,-4	.123,-5	-.191,-4	-.307,-4	.395,-4	.110,-3
22	.250,-4	.402,-4	.589,-4	-.121,-3	-.796,-4	-.385,-4	-.337,-4	-.234,-5	.171,-4	.450,-4
23	.690,-5	.684,-5	.342,-4	-.109,-3	-.620,-4	-.118,-3	.723,-5	-.192,-4	.557,-5	-.109,-4
24	.614,-4	.954,-5	-.122,-4	-.106,-4	-.206,-4	-.462,-4	.688,-4	-.442,-4	.700,-4	.132,-3
25	.910,-4	.184,-4	-.473,-4	.449,-4	-.550,-4	.329,-4	-.617,-4	-.341,-4	.908,-4	.174,-3
26	.333,-4	.443,-4	.135,-4	.272,-4	-.705,-4	.539,-5	-.500,-4	-.300,-4	.289,-4	.640,-5
27	.436,-4	.795,-4	.670,-4	-.999,-6	-.330,-4	-.137,-4	.167,-4	-.515,-5	-.214,-4	-.324,-4
28	.434,-4	.494,-4	.545,-4	.176,-4	.246,-5	-.403,-4	.305,-4	.226,-4	-.180,-4	-.226,-5
29	-.937,-6	.774,-5	.202,-4	.534,-4	-.246,-4	-.572,-4	.556,-4	.534,-4	.307,-5	.852,-6
30	-.145,-4	.951,-5	-.144,-4	.603,-4	-.569,-4	-.389,-4	.617,-4	.283,-4	-.498,-5	-.711,-7
31	.219,-4	.444,-5	-.309,-4	.264,-4	-.708,-4	-.214,-4	.120,-3	-.360,-4	-.126,-4	-.655,-6
32	.138,-4	.121,-4	.450,-5	.129,-4	-.345,-4	-.656,-5	.303,-4	-.332,-4	.418,-5	-.606,-5
33	-.471,-5	.198,-4	-.291,-4	.453,-4	-.849,-5	-.195,-4	-.765,-4	.307,-4	-.364,-5	-.535,-4
34	.113,-4	.513,-5	-.783,-4	.152,-4	-.191,-4	-.138,-4	-.655,-4	-.317,-4	-.550,-5	-.410,-4
35	.133,-4	-.118,-4	-.974,-4	-.830,-5	-.140,-4	-.366,-4	-.212,-4	-.113,-3	.186,-4	-.313,-4
36	-.839,-5	-.120,-4	-.908,-4	.208,-4	.454,-5	-.393,-4	.168,-4	-.414,-4	.545,-4	.330,-4
37	-.291,-5	-.582,-5	-.207,-4	.479,-4	-.497,-5	-.398,-5	.478,-4	.249,-4	.361,-4	.186,-4
38	.993,-5	.141,-6	.123,-4	.551,-4	-.235,-4	-.501,-5	.380,-4	-.126,-4	.147,-4	-.897,-5
39	.245,-4	-.805,-5	-.824,-6	.175,-4	-.255,-4	-.203,-4	.447,-5	-.422,-4	.310,-4	.134,-4
40	-.520,-5	.171,-4	.219,-4	.237,-4	-.243,-4	.769,-5	.242,-5	-.312,-4	.327,-4	.296,-4
41	-.275,-4	.181,-4	-.992,-5	.772,-4	-.192,-4	-.188,-4	.148,-4	.369,-5	-.573,-5	.135,-4
42	.220,-4	.234,-4	-.237,-4	.733,-4	-.960,-6	-.433,-4	.191,-6	.882,-5	-.633,-4	.186,-4
43	.367,-4	.586,-4	.124,-4	.475,-4	.288,-4	-.169,-4	-.587,-5	-.388,-5	-.683,-4	.129,-4
44	.105,-4	.611,-4	.463,-4	.205,-4	.276,-4	.111,-4	-.209,-4	.236,-4	-.267,-4	.120,-4
45	-.151,-4	.492,-4	.424,-4	.972,-5	.439,-4	.626,-4	.101,-4	.259,-4	.137,-4	.176,-4
46	-.180,-4	.187,-4	.209,-4	.273,-4	.489,-4	.553,-4	.213,-4	-.925,-5	.365,-4	-.311,-5
47	.389,-5	.909,-5	.697,-5	.338,-4	.363,-4	.482,-4	.289,-4	-.267,-4	.162,-5	-.189,-4
48	.105,-4	-.710,-5	-.134,-4	.415,-4	.632,-6	.140,-4	.718,-4	-.319,-4	-.170,-4	.120,-4
49	.273,-5	-.175,-4	.903,-5	.238,-4	-.214,-4	.159,-4	.452,-4	-.212,-5	-.371,-4	.142,-4
50	-.554,-4	- 307,-5	.193,-4	-.118,-4	-.195,-4	.448,-4	-.129,-4	-.156,-4	-.469,-4	-.129,-4
51	-.802,-4	768,-5	-.272,-4	-.220,-4	-.188,-4	.408,-4	-.254,-4	-.149,-4	-.287,-4	.247,-4
52	-.561,-4	-.271,-5	-.272,-4	-.205,-4	-.169,-4	.183,-4	.110,-4	.214,-4	-.160,-4	.511,-4
53	.172,-4	-.467,-6	-.118,-4	-.251,-4	-.106,-4	-.294,-4	.284,-4	-.582,-5	.125,-4	.666,-4
54	.315,-4	-.491,-5	-.159,-4	.168,-5	-.166,-5	-.213,-4	-.106,-4	-.307,-4	.475,-4	.463,-4
55	-.860,-5	-.171,-4	.781,-5	.214,-4	.112,-4	.221,-4	-.378,-4	-.243,-4	.382,-4	.463,-4
56	-.957,-4	-.126,-4	.180,-4	.351,-4	.248,-4	.205,-4	-.222,-4	-.339,-4	.508,-4	.586,-4
57	.133,-4	-.304,-6	.173,-4	.259,-4	.946,-5	.251,-5	.199,-4	.493,-5	.313,-4	.410,-4
58	.666,-4	-.719,-5	.277,-4	.177,-4	.925,-5	.984,-5	.398,-4	.602,-4	.250,-5	.328,-4
59	.578,-4	.626,-5	.337,-4	.944,-5	.370,-6	.290,-5	.167,-4	.294,-4	.171,-4	.657,-4
60	.000	.000	.000	.000	.000	.000	.000	.000	.000	.000

Run No. 54 ; u component

	Separation Distance (m.)									
n	6	12	18	24	36	42	48	72	84	90
00	.000	.000	.000	.000	.000	.000	.000	.000	.000	.000
01	.533,-2	-.552,-2	.252,-2	.124,-1	-.264,-2	.321,-2	.387,-4	-.134,-2	-.267,-2	.309,-2
02	.427,-3	-.360,-2	.281,-2	.623,-2	.649,-3	.161,-2	-.596,-3	-.293,-2	-.363,-2	.166,-3
03	-.870,-3	.117,-2	.152,-3	.390,-2	-.422,-2	-.305,-2	.346,-2	-.179,-2	.232,-3	-.239,-2
04	.217,-2	.302,-2	.233,-2	.755,-2	-.107,-2	-.260,-3	.375,-2	-.208,-2	.151,-2	-.359,-3
05	-.548,-3	.991,-3	.237,-2	.277,-2	.150,-2	.120,-2	.944,-3	-.176,-2	-.179,-2	-.114,-2
06	-.504,-2	.715,-3	.172,-2	-.474,-3	.628,-3	.158,-2	-.188,-2	-.928,-3	-.327,-2	.160,-2
07	-.344,-2	-.338,-4	.916,-3	-.144,-2	-.694,-3	.111,-2	-.415,-3	-.230,-2	-.161,-2	.148,-2
08	-.194,-2	-.111,-2	-.281,-2	-.116,-2	.270,-3	.129,-2	.540,-3	-.149,-2	.538,-4	-.338,-2
09	-.210,-2	.350,-4	-.156,-2	-.134,-2	.177,-2	.128,-2	-.167,-2	-.694,-3	.195,-3	-.236,-2
10	.132,-2	.[illegible],-3	.207,-3	-.102,-2	.628,-3	.137,-2	-.958,-3	-.222,-4	.102,-2	.261,-2
11	.871,-3	.233,-3	.545,-3	-.159,-2	-.642,-3	.287,-3	-.[illegible],-3	-.757,-4	.102,-2	.149,-2
12	-.622,-3	-.243,-3	.549,-3	-.130,-2	-.740,-3	-.432,-3	-.110,-3	-.879,-3	-.775,-3	.678,-3
13	-.170,-2	.341,-3	-.821,-4	-.951,-3	-.123,-2	.162,-3	.190,-3	-.114,-2	-.100,-2	-.736,-3
14	-.164,-2	.251,-3	-.839,-3	.107,-2	-.684,-3	.676,-3	-.878,-3	-.750,-3	.563,-3	-.213,-2
15	-.605,-3	.223,-3	-.112,-2	.721,-3	.105,-2	-.802,-3	-.489,-3	-.429,-3	.883,-3	-.236,-3
16	.303,-3	.204,-3	-.170,-3	.595,-3	.134,-2	-.129,-2	.352,-3	-.656,-3	.349,-3	.110,-2
17	-.150,-3	-.433,-3	.348,-3	-.540,-4	.107,-3	-.669,-3	-.317,-3	-.100,-2	-.343,-3	.281,-3
18	.631,-4	-.138,-3	.[illegible],-3	-.285,-4	.402,-3	-.705,-4	-.633,-3	-.601,-3	-.526,-3	-.204,-3
19	-.272,-3	-.183,-3	.330,-3	.270,-3	.681,-4	.182,-3	-.154,-2	-.753,-3	-.402,-3	-.683,-3
20	-.390,-3	-.573,-3	.284,-4	-.186,-3	.647,-3	.510,-3	-.253,-2	-.825,-3	-.623,-3	-.526,-3
21	-.970,-4	-.230,-4	.325,-4	-.104,-2	-.580,-3	-.156,-3	-.839,-3	-.640,-3	-.355,-3	-.161,-3
22	.321,-4	.[illegible],-3	-.511,-3	-.648,-3	-.260,-3	-.387,-3	.[illegible],-3	-.157,-3	.195,-3	-.221,-3
23	-.417,-3	-.781,-4	-.110,-2	-.401,-3	.110,-3	-.181,-2	.690,-3	.105,-3	-.254,-3	-.517,-3
24	-.734,-3	.144,-3	-.121,-2	-.120,-3	-.182,-3	-.135,-2	-.420,-4	-.613,-4	-.756,-3	-.266,-3
25	-.123,-2	.294,-3	-.404,-3	-.265,-3	-.578,-3	-.341,-3	.357,-5	.354,-3	-.687,-3	.192,-4
26	-.625,-3	.902,-4	-.253,-4	.438,-3	-.354,-3	.161,-3	.505,-3	.194,-3	-.463,-3	.258,-3
27	.232,-3	.458,-4	-.151,-3	.545,-3	.395,-4	-.494,-3	.616,-3	-.131,-3	-.872,-4	.265,-3
28	.239,-3	.278,-3	.340,-3	.432,-3	.944,-4	-.414,-3	.259,-3	.265,-3	.141,-3	.181,-3
29	-.456,-3	.383,-3	.572,-3	.335,-4	-.132,-3	-.175,-3	.362,-3	.321,-3	.702,-4	.207,-3
30	-.284,-3	.118,-3	.406,-3	-.424,-3	-.287,-3	-.466,-3	.227,-3	.252,-3	.224,-3	.725,-3
31	.230,-3	-.235,-3	.390,-3	-.818,-3	-.344,-3	-.438,-3	-.143,-3	.319,-3	.430,-3	.478,-3
32	.362,-3	-.159,-3	.377,-3	-.633,-3	.419,-4	.860,-4	-.326,-3	-.645,-4	.215,-3	-.212,-3
33	.264,-3	-.113,-3	.341,-3	-.128,-3	-.180,-3	-.394,-4	-.392,-3	.140,-3	.210.-3	-.770,-3
34	.342,-3	-.178,-3	.222,-3	-.117,-3	-.402,-4	-.105,-3	-.209,-3	.358,-3	.129,-3	-.468,-3
35	.167,-4	-.479,-3	-.920,-4	-.334,-3	.489,-3	-.203,-3	-.161,-3	.348,-3	-.289,-3	-.344,-3
36	-.257,-3	-.497,-3	-.495,-3	-.300,-3	.138,-3	-.451,-3	-.467,-3	.305,-3	-.115,-3	-.184,-3
37	-.477,-3	-.322,-3	-.272,-3	-.487,-3	-.584,-3	-.376,-3	-.174,-3	-.195,-3	.111,-3	-.425,-4
38	-.505,-3	-.137,-3	-.128,-3	-.204,-3	-.690,-3	.746,-4	.118,-3	-.358,-3	.393,-3	.934,-3
39	-.675,-3	-.295,-3	.158,-3	-.315,-3	-.735,-3	.477,-3	-.267,-3	-.641,-4	-.718,-4	.210,-3
40	-.638,-3	-.126,-3	.151,-3	-.235,-3	-.436,-3	.[illegible],-3	-.406,-3	-.651,-4	.914,-4	.441,-3
41	-.444,-3	.103,-3	.349,-3	-.105,-3	-.207,-3	.415,-3	-.923,-3	-.178,-3	.457,-4	.897,-4
42	-.733,-3	.260,-3	.663,-3	.244,-3	-.887,-4	-.840,-4	-.761,-4	-.121,-3	.186,-3	.922,-4
43	-.558,-3	.343,-3	.255,-3	.111,-3	-.145,-3	.985,-4	.337,-4	-.104,-3	.187,-3	.964,-4
44	-.947,-4	.474,-3	.332,-3	.110,-3	-.485,-3	.392,-3	.739,-4	-.326,-3	-.574,-4	.416,-3
45	-.700,-4	.270,-3	.321,-3	-.211,-4	-.362,-3	.207,-4	-.363,-4	-.285,-3	-.175,-3	.392,-3
46	-.110,-3	.[illegible],-4	-.616,-4	-.217,-3	.179,-3	-.243,-3	-.396,-4	-.818,-4	-.139,-3	.583,-4
47	.497,-4	-.230,-3	-.321,-3	-.339,-3	.338,-3	-.807,-4	.123,-3	.464,-4	-.300,-4	-.278,-3
48	.234,-3	-.254,-3	-.118,-3	-.648,-4	-.200,-3	.341,-3	.348,-3	.423,-4	.200,-3	-.158,-3
49	-.926,-4	-.389,-3	-.137,-3	-.111,-3	-.565,-3	.301,-3	.215,-3	.147,-3	.697,-4	-.151,-3
50	-.247,-3	-.211,-3	-.256,-3	-.408,-3	-.312,-3	.124,-3	.105,-3	.772,-4	-.307,-3	-.235,-3
51	-.201,-3	.124,-3	-.146,-3	-.378,-3	-.639,-4	-.175,-3	.142,-4	-.123,-3	-.407,-3	-.312,-3
52	-.464,-3	.125,-3	-.321,-3	-.912,-4	-.273,-4	-.309,-3	-.417,-4	-.190,-3	-.363,-3	-.689,-4
53	-.694,-3	-.211,-3	-.332,-3	-.817,-4	-.192,-3	-.313,-3	.259,-3	-.141,-3	-.530,-4	.430,-3
54	-.265,-3	.280,-4	.316,-4	-.329,-3	-.397,-3	-.175,-3	.597,-3	-.141,-3	.150,-3	.442,-3
55	-.320,-3	.147,-3	.435,-4	-.302,-3	-.605,-3	-.559,-4	.200,-3	-.249,-3	-.259,-3	-.145,-3
56	-.520,-3	-.203,-3	-.122,-3	.244,-4	-.230,-3	-.672,-4	-.116,-3	-.193,-3	-.580,-3	-.262,-3
57	.892,-4	-.163,-3	.102,-3	.125,-3	-.183,-4	-.260,-4	-.776,-4	-.127,-3	-.440,-3	.194,-4
58	.478,-3	.540,-4	.957,-4	.272,-3	-.321,-4	.221,-3	-.111,-3	.201,-4	.115,-3	.115,-3
59	.228,-3	-.142,-3	-.776,-4	.191,-3	-.642,-4	.112,-3	-.154,-3	.116,-3	.333,-3	-.876,-4
60	.000	.000	.000	.000	.000	.000	.000	.000	.000	.000

component

N	11	12	13	22	23	42	43	72	24	00
00	.000	.000	.000	.000	.000	.000	.000	.000	.000	.000
01	.641,-3	.450,-3	.117,-2	-.371,-3	-.740,-5	.445,-3	-.273,-3	-.661,-3	-.411,-3	-.442,-3
02	.617,-3	.394,-3	.632,-3	-.556,-3	.600,-3	.748,-3	-.127,-3	.240,-4	-.509,-3	-.843,-4
03	.506,-3	.102,-2	.153,-3	.263,-5	.102,-2	.140,-2	-.324,-3	-.213,-3	-.523,-3	-.736,-3
04	.372,-3	.107,-2	.343,-3	.710,-3	.124,-2	.144,-2	-.503,-3	-.462,-3	-.232,-3	-.132,-2
05	.107,-2	.602,-3	.711,-3	.126,-4	.657,-3	.153,-3	.300,-3	-.452,-3	-.520,-3	-.757,-3
06	.196,-2	.717,-3	.999,-3	-.124,-3	-.492,-4	-.343,-3	.355,-3	-.418,-3	-.155,-3	-.335,-4
07	.162,-2	.103,-2	.330,-3	-.153,-4	.357,-3	.415,-3	.447,-3	.227,-3	-.100,-3	-.494,-3
08	.466,-3	.731,-3	.400,-3	.269,-3	.599,-3	.100,-2	.203,-3	.273,-3	-.173,-3	-.267,-3
09	-.555,-3	.309,-3	.224,-3	.236,-3	.343,-3	.930,-3	.511,-3	-.155,-3	-.330,-4	-.336,-3
10	-.314,-3	.423,-3	.133,-3	.200,-3	.318,-3	.488,-3	.424,-3	.114,-3	.304,-3	-.203,-3
11	-.125,-3	.314,-3	.375,-3	-.107,-3	-.154,-3	-.301,-4	.514,-3	.230,-4	.327,-3	.132,-3
12	.330,-3	.292,-3	.103,-3	-.373,-3	-.706,-3	.213,-3	.543,-3	-.977,-4	.139,-3	.633,-3
13	-.915,-4	.635,-4	.229,-4	-.437,-3	-.344,-3	-.505,-4	-.273,-3	-.243,-3	-.514,-4	.662,-3
14	-.579,-3	-.200,-4	-.720,-4	-.176,-3	.268,-3	-.253,-3	-.197,-3	-.392,-3	-.230,-3	.486,-3
15	-.158,-3	-.731,-4	-.557,-3	.276,-3	.749,-3	-.602,-3	.177,-3	-.331,-3	.546,-4	.312,-3
16	.209,-3	-.209,-3	-.380,-3	-.149,-3	.724,-3	-.646,-3	-.280,-3	-.227,-3	.393,-3	-.242,-3
17	.877,-4	-.166,-3	-.184,-3	-.326,-3	.594,-3	-.107,-2	-.635,-3	-.175,-3	.228,-3	-.455,-3
18	.199,-3	-.113,-3	-.495,-3	-.292,-3	.422,-3	-.952,-3	-.153,-3	-.477,-3	.760,-4	-.187,-3
19	.284,-3	-.194,-3	-.630,-3	-.444,-3	.220,-3	-.385,-3	-.453,-3	-.480,-3	.134,-3	-.353,-3
20	.544,-3	-.408,-3	-.186,-4	-.522,-3	.222,-3	-.326,-3	-.593,-3	-.405,-3	.113,-3	-.377,-3
21	.702,-3	-.530,-3	.170,-3	-.198,-3	.295,-3	-.672,-3	-.238,-3	-.254,-3	-.446,-3	-.674,-4
22	.870,-3	-.459,-3	-.233,-3	.421,-3	-.472,-5	-.115,-2	-.429,-3	-.116,-3	-.255,-3	.575,-4
23	.872,-3	-.406,-3	-.357,-3	.335,-3	-.101,-3	-.701,-3	-.124,-3	.277,-3	.302,-4	-.134,-3
24	.471,-3	-.263,-3	-.167,-3	.583,-4	-.550,-3	.885,-4	.167,-3	.629,-4	.704,-4	-.572,-3
25	.263,-3	-.503,-4	-.109,-3	-.524,-4	-.157,-3	.160,-3	-.175,-3	-.239,-3	-.179,-3	-.407,-3
26	.111,-3	.122,-3	.126,-3	-.662,-4	.179,-3	.809,-4	-.249,-3	-.239,-3	.316,-5	-.275,-4
27	-.298,-3	.452,-4	-.165,-3	.146,-3	.158,-3	-.173,-3	.465,-4	-.101,-3	.203,-3	-.675,-4
28	.107,-3	-.216,-3	-.507,-3	.180,-3	.145,-3	-.516,-3	.196,-3	-.116,-3	.233,-3	.160,-3
29	.529,-3	-.316,-3	.457,-5	.222,-3	.557,-3	-.203,-3	.325,-3	-.140,-4	.253,-3	.139,-3
30	.937,-5	-.102,-3	.441,-3	.363,-3	.570,-3	.371,-3	.430,-3	-.338,-4	.306,-3	-.277,-3
31	-.390,-3	.412,-3	.304,-3	.563,-3	.185,-4	.517,-3	.282,-3	-.142,-3	.303,-3	-.366,-3
32	-.296,-3	.371,-3	.183,-3	.502,-3	-.319,-4	.244,-3	.114,-3	-.232,-3	.236,-3	-.822,-4
33	-.269,-3	.204,-3	.700,-4	.244,-3	-.217,-3	.124,-3	-.578,-4	-.194,-3	.275,-3	-.369,-4
34	-.641,-4	.207,-3	.133,-3	-.285,-4	-.102,-3	.934,-4	-.228,-3	.309,-6	.302,-4	.527,-4
35	.919,-4	-.331,-4	-.138,-3	-.155,-5	.692,-5	.262,-3	-.186,-3	.131,-3	-.168,-3	-.395,-4
36	-.144,-4	-.211,-3	-.512,-3	-.120,-3	.520,-4	.642,-4	-.170,-3	.158,-3	-.142,-3	-.139,-3
37	-.694,-4	-.272,-3	-.566,-3	-.226,-4	.732,-4	-.133,-4	-.175,-3	-.114,-3	-.444,-3	-.411,-3
38	.304,-3	-.254,-3	-.237,-3	-.241,-3	-.951,-4	.841,-4	-.991,-4	-.645,-4	-.301,-3	-.312,-3
39	.289,-3	-.136,-4	.137,-3	-.229,-3	.274,-4	.420,-3	-.342,-4	-.752,-4	-.184,-3	.133,-4
40	-.225,-3	.223,-3	.360,-3	-.230,-3	-.243,-4	.610,-3	.613,-4	-.121,-3	-.153,-3	.397,-3
41	-.101,-3	-.243,-4	.247,-3	-.415,-3	-.139,-3	.167,-3	-.205,-4	.749,-4	-.138,-3	.208,-3
42	.326,-4	-.146,-3	-.103,-3	-.130,-3	-.128,-3	.220,-3	-.240,-4	.643,-4	.277,-4	-.277,-3
43	-.313,-3	.884,-4	-.340,-3	.352,-4	-.193,-3	.102,-3	-.142,-4	-.652,-4	.251,-3	-.433,-3
44	-.617,-3	.207,-3	.170,-3	-.820,-4	-.467,-4	-.225,-3	-.514,-4	-.234,-3	.245,-3	-.284,-3
45	-.288,-3	.166,-3	.515,-3	-.264,-3	.385,-4	-.196,-3	-.113,-3	-.189,-3	-.345,-4	.681,-4
46	.731,-4	.253,-3	.297,-3	-.165,-3	-.280,-3	.219,-4	-.755,-4	-.854,-4	-.647,-4	.136,-3
47	.149,-3	.236,-3	.164,-3	-.109,-3	-.195,-3	-.139,-3	.766,-4	-.383,-4	.739,-4	.181,-3
48	.335,-3	.121,-3	.174,-3	-.244,-4	-.113,-3	-.122,-3	-.643,-4	.155,-3	-.267,-5	.151,-4
49	.197,-3	-.111,-4	-.230,-3	-.499,-4	.139,-3	.104,-3	.443,-4	.315,-3	.202,-3	-.477,-3
50	.163,-4	-.375,-3	-.245,-3	.660,-4	.147,-4	-.171,-3	.600,-4	.239,-3	.427,-3	-.165,-3
51	.106,-3	-.212,-3	-.118,-4	-.136,-4	-.191,-3	-.414,-3	-.305,-4	-.215,-3	.429,-3	.307,-3
52	.545,-4	.250,-3	-.710,-4	-.114,-3	.112,-3	-.723,-4	.214,-3	-.432,-3	.169,-3	.317,-3
53	.208,-3	.295,-3	-.141,-3	.122,-3	.387,-3	.151,-3	.492,-3	-.424,-4	.282,-4	.208,-3
54	.277,-3	.188,-3	.495,-4	.106,-3	.251,-3	-.100,-3	.425,-3	.122,-3	-.527,-4	.167,-3
55	-.602,-4	.384,-4	.938,-4	.156,-3	-.619,-4	-.101,-3	.300,-4	-.420,-4	-.605,-4	-.204,-3
56	-.200,-3	-.202,-4	.178,-3	.241,-3	.495,-4	-.286,-3	-.250,-3	-.153,-3	.134,-3	-.498,-3
57	-.682,-4	.610,-4	.149,-3	-.778,-5	.902,-4	-.134,-3	-.942,-4	-.365,-3	.119,-3	-.212,-3
58	-.119,-3	.843,-4	-.133,-3	-.194,-3	-.356,-5	-.342,-5	-.991,-4	-.327,-3	-.630,-4	-.291,-4
59	-.420,-4	.228,-3	-.179,-3	-.198,-3	-.927,-4	-.219,-3	-.248,-3	-.836,-4	-.312,-4	-.173,-3
60	.000	.000	.000	.000	.000	.000	.000	.000	.000	.000

Run No. 55 ; u component

Separation Distance (in.)

Y	6	12	18	24	36	42	48	72	84	90
00	.000	.000	.000	.000	.000	.000	.000	.000	.000	.000
01	.172,-1	.210,-1	.242,-1	.161,-1	.224,-1	.117,-1	.136,-1	-.105,-1	-.313,-1	-.165,-1
02	.170,-1	.197,-1	.209,-1	.145,-1	.211,-2	.466,-2	.600,-1	-.174,-1	-.287,-1	-.215,-1
03	.108,-1	-.107,-2	.664,-2	.151,-1	-.124,-2	.247,-2	.412,-1	-.176,-1	-.225,-1	-.220,-1
04	.153,-1	.325,-2	-.701,-3	-.324,-3	.295,-2	.919,-2	-.128,-2	.240,-2	-.108,-1	-.134,-2
05	.113,-1	.295,-2	-.638,-2	.254,-2	.647,-2	.129,-1	-.117,-2	.389,-2	-.118,-1	.889,-2
06	.822,-2	.253,-2	-.452,-2	.121,-1	.461,-2	.231,-3	.261,-2	.339,-2	-.127,-1	.577,-3
07	.442,-2	.651,-3	-.342,-2	.129,-1	.194,-2	-.778,-2	.317,-2	.299,-2	-.117,-1	-.740,-2
08	.513,-2	.275,-2	-.256,-2	.675,-2	-.161,-2	-.417,-2	-.253,-2	.140,-2	-.930,-2	-.304,-2
09	.626,-2	-.192,-2	-.236,-2	.207,-2	-.314,-2	.111,-2	.434,-4	-.660,-2	-.119,-1	-.350,-2
10	.312,-2	-.237,-2	-.116,-2	-.107,-2	-.141,-3	.919,-3	.157,-2	.119,-2	-.939,-2	-.172,-2
11	.717,-3	.645,-3	.515,-3	-.168,-2	-.110,-2	-.213,-2	.467,-3	.156,-2	-.598,-2	.142,-2
12	.395,-2	.936,-4	.113,-2	-.176,-2	-.537,-2	-.370,-4	.174,-2	.342,-2	-.181,-3	.208,-2
13	.443,-2	-.130,-2	-.433,-3	-.243,-2	-.347,-2	.162,-2	.647,-2	.397,-2	.230,-2	.226,-3
14	.279,-2	-.407,-3	-.706,-3	-.162,-2	-.529,-3	-.928,-3	2.7,-2	.258,-2	-.358,-2	.117,-3
15	-.212,-3	.372,-3	-.222,-2	-.423,-3	-.696,-3	-.141,-2	.762,-3	-.710 -3	-.427,-2	-.899,-3
16	.104,-2	-.190,-5	-.349,-2	-.709,-3	.481,-3	-.903,-3	-.130,-2	-.176,-2	-.200,-3	-.273,-2
17	.310,-2	-.394,-2	-.132,-2	-.173,-2	.267,-2	-.127,-2	-.374,-2	-.223,-2	.104,-2	-.196,-2
18	.358,-2	-.371,-2	.739,-4	-.252,-2	.223,-2	-.749,-3	-.352,-2	.470,-3	.117,-2	.232,-3
19	.172,-2	-.526,-3	-.422,-3	-.127,-2	.166,-2	.305,-3	.742,-3	-.250,-3	-.480,-3	.542,-3
20	-.876,-6	.274,-3	.394,-3	-.173,-2	.157,-2	.163,-3	.986,-3	-.150,-2	-.401,-3	.398,-3
21	-.739,-3	-.112,-2	.254,-3	-.163,-2	.576,-3	.125,-2	.323,-2	-.274,-3	-.145,-3	.162,-3
22	-.430,-3	-.116,-2	-.112,-3	-.786,-3	-.163,-2	.158,-2	.304,-2	.200,-2	-.650,-3	-.641,-4
23	-.717,-3	-.374,-3	.675,-3	.333,-3	-.253,-2	-.232,-3	-.512,-3	.132,-2	-.544,-3	-.113,-2
24	.736,-4	-.400,-3	.176,-2	.990,-3	-.986,-3	.903,-4	-.331,-2	.982,-3	-.745,-3	-.129,-2
25	-.805,-3	-.413,-3	.116,-2	.218,-2	.110,-2	.463,-3	-.300,-2	.274,-2	-.201,-2	-.107,-2
26	-.160,-2	-.721,-4	.624,-3	.318,-2	.121,-4	-.461,-3	-.254,-2	.305,-2	-.255,-2	-.115,-2
27	-.842,-3	-.339,-3	-.243,-4	.160,-2	-.103,-2	.214,-3	.143,-2	-.842,-3	-.310,-2	-.118,-2
28	-.877,-4	-.732,-3	-.174,-3	-.112,-2	-.111,-2	.105,-2	.100,-2	-.563,-3	-.130,-2	-.487,-3
29	-.132,-3	-.432,-3	-.205,-3	-.203,-2	-.231,-3	.648,-3	-.101,-2	-.140,-3	-.510,-3	.497,-4
30	.905,-3	-.115,-2	-.242,-4	-.732,-3	-.121,-3	.451,-3	-.141,-2	-.662,-3	-.295,-3	-.331,-3
31	.161,-2	-.129,-2	.114,-3	.292,-3	.306,-4	.158,-2	.912,-3	-.143,-2	-.350,-4	-.678,-3
32	.702,-3	-.545,-3	.240,-3	.135,-2	-.311,-3	.117,-2	.312,-2	-.619,-3	-.488,-3	-.169,-3
33	-.193,-3	-.134,-2	.488,-4	.938,-3	-.527,-3	.343,-3	.202,-2	.325,-3	-.518,-3	-.140,-3
34	-.953,-4	-.417,-3	.206,-3	-.821,-3	.178,-3	.167,-3	-.441,-3	.646,-3	-.975,-3	-.302,-3
35	.275,-3	-.933,-3	-.723,-4	.154,-3	.904,-3	.970,-3	-.133,-2	-.374,-3	-.215,-3	-.319,-3
36	.100,-2	-.891,-3	-.533,-3	.781,-3	.388,-3	.281,-3	-.290,-2	.110,-4	-.330,-3	-.214,-3
37	-.923,-4	-.894,-3	-.204,-3	.130,-2	.219,-3	-.718,-3	-.1[illegible],-2	.115,-2	-.493,-4	-.596,-3
38	.775,-4	-.904,-3	-.210,-3	.695,-3	-.456,-3	-.870,-3	.697,-3	.130,-2	.292,-3	-.322,-3
39	.114,-2	-.922,-3	-.575,-3	-.532,-3	-.280,-3	.233,-3	1 [illegible],-2	.803,-3	.115,-2	-.563,-4
40	.479,-3	.191,-3	.635,-4	-.937,-3	-.247,-3	.107,-2	.672,-3	-.445,-3	.245,-2	.944,-4
41	-.275,-3	.571,-3	.340,-4	-.197,-3	-.924,-3	.612,-3	.759,-3	.855,-3	.117,-2	.306,-3
42	-.285,-3	.673,-4	-.150,-3	.472,-3	-.110,-2	.663,-3	.124,-2	.141,-2	-.166,-3	-.130,-3
43	-.335,-3	-.731,-3	.746,-4	.843,-3	-.500,-3	.393,-3	.200,-2	.160,-3	-.303,-3	-.352,-4
44	-.213,-3	-.503,-3	.110,-3	-.550,-3	-.100,-3	.728,-3	.109,-2	-.120,-3	-.006,-3	.245,-3
45	-.203,-4	.133,-3	.207,-4	-.394,-3	-.899,-4	.209,-3	-.493,-4	-.170,-3	-.603,-3	.452,-3
46	.124,-4	.10[illegible],-3	.506,-4	-.351,-3	.324,-3	-.134,-3	.246,-3	-.712,-4	-.124,-3	.329,-3
47	-.221,-3	-.3[illegible]3,-4	-.911,-3	-.532,-3	.318,-3	-.434,-3	.321,-3	.123,-3	-.166,-2	.601,-3
48	.229,-3	.197,-3	-.152,-4	-.751,-4	-.170,-3	-.106,-3	-.547,-3	.236,-3	-.548,-3	.259,-3
49	.306,-3	.013,-4	-.897,-4	.400,-3	-.126,-2	.171,-3	.780,-3	.351,-3	.587,-3	.230,-3
50	.447,-3	-.421,-3	-.127,-3	.730,-3	-.894,-3	.520,-3	.113 -2	-.323,-4	.297,-3	.912,-3
51	.602,-3	-.171,-3	-.348,-3	-.715,-4	.448,-4	.221,-3	-.36 [illegible],-3	.146,-3	-.102,-2	.108,-2
52	.509,-3	-.906,-4	-.102,-3	-.538,-3	.601,-4	-.315,-3	-.122,-2	.236,-4	-.159,-2	.511,-3
53	.211,-3	-.246,-3	-.129,-3	-.330,-3	-.346,-3	.257,-3	-.127,-3	-.127,-3	-.129,-2	.947,-4
54	-.157,-3	-.189,-3	-.344,-3	-.246,-3	-.259,-3	-.112,-3	-.710,-3	.474,-5	-.840,-3	.229,-3
55	.262,-3	-.320,-3	-.966,-4	.614,-3	.767,-4	-.110,-2	-.148,-2	.467,-3	-.354,-3	-.40,-3
56	.201,-3	-.217,-3	.241,-3	.459,-3	.440,-3	-.948,-3	-.600,-3	.234,-3	.239,-3	-.103,-2
57	-.166,-3	-.696,-5	.252,-3	-.172,-3	.749,-5	.737,-4	.732,-3	.506,-3	.109,-2	-.932,-3
58	-.740,-3	.344,-3	-.169,-3	.143,-3	.551,-3	.402,-3	.751,-3	.188,-3	.322,-3	-.228,-3
59	-.807,-3	-.525,-4	-.358,-3	.414,-3	.172,-2	.273,-3	.111,-2	-.618,-3	-.507,-3	.365,-3
60	.000	.000	.000	.000	.000	.000	.000	.000	.000	.000

Run No. 55 ; v component

Separation Distance (n.)

N	0	12	18	24	36	42	48	72	84	90
00	.000	.000	.000	.000	.000	.000	.000	.000	.000	.000
01	.215,-3	.479,-3	.101,-2	.134,-2	.133,-2	.143,-2	.105,-2	.560,-2	.494,-2	.473,-2
02	.105,-2	.107,-2	.220,-2	.206,-2	.140,-2	.202,-2	-.239,-2	.237,-2	.261,-2	.382,-2
03	.386,-3	.131,-2	.172,-2	-.199,-2	-.326,-2	-.184,-2	-.333,-2	.490,-3	.134,-2	.230,-2
04	.126,-3	.159,-2	.139,-2	-.132,-2	-.268,-2	-.293,-2	-.221,-2	-.120,-2	-.235,-3	.645,-3
05	.696,-3	.242,-2	.204,-2	.788,-3	-.295,-3	.443,-3	-.157,-2	-.970,-3	.326,-3	-.717,-3
06	.154,-2	.205,-2	.252,-2	.252,-2	.174,-2	.135,-2	-.174,-2	.143,-3	.923,-3	-.902,-3
07	.116,-2	.176,-2	.180,-2	.151,-2	.150,-2	-.205,-3	-.138,-3	-.673,-3	.271,-3	-.185,-2
08	-.207,-4	.235,-2	.617,-3	-.17,-3	-.320,-3	-.171,-2	-.117,-2	.941,-3	.165,-2	-.221,-2
09	.191,-3	.324,-2	.020,-3	-.256,-3	-.150,-2	-.159,-2	-.164,-2	.366,-2	.414,-2	-.102,-2
10	.874,-3	.277,-2	.152,-2	.405,-4	-.161,-2	-.493,-3	.846,-3	.166,-2	.115,-2	-.104,-2
11	.927,-3	.216,-2	.168,-2	-.111,-3	-.131,-2	.438,-3	.144,-3	.122,-2	.578,-4	.247,-3
12	.117,-2	.210,-2	.156,-2	-.112,-2	-.162,-2	-.339,-3	.197,-3	.103,-3	-.642,-3	.990,-3
13	.181,-2	.222,-2	.227,-2	-.113,-2	-.364,-3	-.140,-2	-.456,-3	-.545,-3	-.153,-2	.943,-3
14	.134,-2	.260,-2	.294,-2	-.119,-3	.643,-3	-.948,-3	-.956,-3	-.800,-4	.252,-3	.145,-2
15	.253,-3	.248,-2	.206,-2	.248,-3	.345,-3	-.622,-3	.429,-3	.600,-4	.174,-2	.303,-2
16	.392,-4	.177,-2	.119,-2	-.372,-3	-.120,-3	-.480,-3	-.137,-2	.101,-2	.198,-2	.327,-2
17	.684,-3	.202,-2	.180,-2	-.571,-3	.402,-3	.412,-3	-.212,-2	.413,-3	.885,-3	.261,-2
18	.471,-3	.249,-2	.178,-2	.435,-3	.732,-3	.663,-3	-.279,-3	-.162,-2	-.202,-2	-.790,-3
19	-.402,-3	.249,-2	.091,-3	.434,-3	.564,-3	.620,-3	.136,-2	-.162,-2	-.191,-2	-.620,-3
20	-.112,-3	.270,-2	.897,-3	-.529,-3	-.126,-2	-.353,-3	.232,-2	.159,-3	.940,-3	.130,-2
21	-.184,-3	.242,-2	.726,-3	-.504,-3	-.169,-2	-.108,-2	.133,-2	.212,-3	.131,-2	.345,-3
22	.126,-3	.130,-2	.167,-3	.434,-3	-.108,-3	-.112,-2	-.779,-3	.965,-3	.126,-2	-.730,-4
23	.495,-3	.223,-2	.237,-3	.833,-3	.725,-3	-.1 3,-2	-.108,-2	.157,-2	.135,-2	.551,-3
24	-.187,-4	.306,-2	.102,-2	.104,-2	.100,-2	-.451,-3	-.349,-3	.554,-3	.022,-3	.114,-2
25	-.274,-3	.271,-2	.125,-2	.032,-3	.916,-3	.275,-3	-.576,-3	-.059,-3	-.301 -3	.937,-3
26	-.161,-3	.147,-2	.305,-3	.524,-3	.12 ,-3	.692,-3	-.132,-2	-.107,-2	-.361,-3	.523,-4
27	-.230,-3	.136,-2	.471,-3	.522,-3	.544,-3	.324,-4	-.442,-3	-.124,-2	-.154,-2	-.322,-3
28	.297,-3	.157,-2	.677,-3	.133,-3	-.156,-3	-.211,-3	.154,-2	-.748,-3	-.954,-3	-.549,-3
29	.941,-3	.224,-2	.992,-3	-.551,-4	-.123,-2	-.760,-3	.263,-2	-.743,-4	-.141,-3	-.710,-3
30	.891,-3	.314,-2	.146,-2	.353,-7	-.358,-3	-.613,-3	.574,-3	.204,-3	.739,-3	-.758,-3
31	-.410,-3	.381,-2	.119,-2	.540,-3	.628,-4	.119,-3	-.446,-3	-.392,-3	-.472,-4	-.163,-2
32	-.646,-3	.325,-2	.723,-3	.110,-2	-.627,-3	-.441,-3	.016,-3	-.528,-3	-.115,-2	-.132,-2
33	-.540,-3	.293,-2	.736,-3	.922,-4	.312,-4	-.156,-2	.155,-2	-.033,-3	-.207,-2	-.223,-2
34	-.111,-2	.341,-2	.122,-2	-.932,-3	.144,-3	.696,-3	.184,-2	-.140,-2	-.134,-2	-.154,-2
35	-.501,-3	.231,-2	.721,-3	-.22 ,-3	-.580,-4	.377,-3	.117,-2	-.684,-3	.197,-4	-.344,-3
36	.363,-3	.174,-2	.309,-3	-.127,-3	-.602,-4	-.222,-3	-.123,-2	.584,-3	-.597,-3	-.876,-3
37	.397,-3	.157,-2	.418,-3	-.570,-3	-.400,-3	-.855,-3	-.104,-2	.558,-3	-.110,-2	.276,-5
38	.498,-3	.133,-2	.516,-3	-.233,-3	-.534,-3	-.420,-3	-.698,-3	.329,-3	-.117,-3	.798,-3
39	.659,-3	.145,-2	.105,-2	.360,-3	-.114,-2	-.776,-3	.101,-2	.654,-4	.401,-3	.637,-3
40	.242,-4	.188,-2	.162,-2	.524,-3	-.100,-2	-.789,-3	.856,-3	-.419,-3	.113,-3	.159,-3
41	-.928,-3	.221,-2	.139,-2	.317,-4	.259,-3	.144,-3	.000,-3	-.112,-2	.802,-3	-.349,-3
42	-.743,-3	.245,-2	.710,-3	.105,-3	.504,-3	.452,-3	.756,-3	-.530,-3	.608,-3	-.694,-3
43	-.406,-3	.231,-2	-.175,-3	.209,-3	.106,-3	.493,-3	.124,-2	.119,-2	-.605,-3	-.112,-2
44	-.153,-3	.227,-2	-.439,-3	.259,-3	.127,-3	.106,-2	.140,-2	.101,-2	-.186,-2	-.854,-3
45	.215,-3	.190,-2	-.147,-3	.622,-3	.140,-3	.111,-3	.136,-2	.182,-2	-.102,-2	-.381,-4
46	.104,-2	.159,-2	-.111,-3	.570,-3	-.139,-3	.122,-3	-.354,-5	.183,-3	.379,-3	.123,-3
47	.107,-2	.136,-2	.258,-3	.359,-4	.451,-4	.643,-4	-.230,-3	.402,-3	.705,-3	.744,-3
48	.587,-3	.118,-2	.473,-3	-.141,-3	-.636,-4	-.561,-4	-.998,-5	-.545,-3	-.341,-3	-.461,-4
49	.558,-3	.142,-2	.272,-3	.317,-5	-.257,-3	-.594,-3	.310,-3	.740,-4	-.967,-3	-.441,-3
50	.590,-3	.123,-2	-.213,-3	.141,-3	-.470,-3	-.544,-3	-.793,-3	.451,-3	.575,-3	.778,-3
51	.224,-3	.475,-3	-.105,-3	.300,-3	-.130,-3	-.376,-4	-.191,-3	-.953,-4	.142,-2	.877,-3
52	-.856,-4	.302,-3	.520,-3	-.107,-3	-.430,-3	.450,-3	.377,-3	-.641,-3	-.185,-3	-.333,-4
53	-.217,-3	.655,-3	.739,-3	-.400,-4	-.512,-3	-.562,-4	-.453,-3	.551,-3	-.538,-3	-.614,-4
54	-.665,-3	.217,-3	.451,-3	.215,-3	-.988,-4	-.829,-3	-.135,-2	.114,-2	.313,-3	.578,-3
55	-.357,-3	.568,-3	-.377,-4	.296,-3	-.318,-4	-.221,-3	-.100,-2	.113,-2	.299,-3	.142,-3
56	-.461,-4	.332,-3	.342,-3	.295,-3	-.749,-3	.206,-3	-.419,-3	.709,-3	-.140,-3	-.110,-2
57	-.130,-3	.434,-3	.120,-2	-.147,-3	-.115,-2	.453,-3	-.669,-3	.115,-2	.102,-2	-.156,-2
58	-.291,-3	-.360,-5	.609,-3	-.135,-2	.925,-5	.614,-3	-.301,-3	.578,-3	.483,-3	-.462,-3
59	-.119,-3	-.294,-3	.302,-3	-.106,-2	.884,-3	.637,-3	.655,-3	.119,-3	-.578,-3	.121,-2
60	.000	.000	.000	.000	.000	.000	.000	.000	.000	.000

Run No. 50 ; u component

Computation Distance (m.)

J	1	4	5	10	20	21	24	30	34	35
00	.000	.000	.000	.000	.000	.000	.000	.000	.000	.000
01	.4[illegible],-2	.435,-2	.247,-2	-.120,-1	.4[illegible],-2	.4[illegible],-2	.287,-2	-.500,-1	.209,-1	.250,-1
02	.420,-2	.249,-2	.2[illegible],-2	-.[illegible],-2	.134,-1	.130,-1	-.[illegible]41,-2	-.230,-1	.354,-1	.333,-1
03	.103,-2	.428,-2	.607,-2	-.467,-2	.[illegible]73,-2	.413,-2	-.172,-1	.270,-2	.122,-1	.143,-1
04	.[illegible]01,-3	.6[illegible]0,-2	.349,-2	.113,-2	.2[illegible]3,-2	.13[illegible],-2	-.5[illegible]4,-2	.12[illegible],-1	-.274,-2	.265,-2
05	.121,-2	.233,-2	.312,-2	.[illegible]16,-3	.131,-2	.122,-2	-.124,-2	-.17[illegible],-2	-.36[illegible],-2	.687,-3
06	-.642,-3	.235,-2	.186,-2	-.191,-2	-.246,-2	-.256,-2	-.234,-2	-.306,-2	-.579,-3	-.158,-2
07	.104,-2	.104,-2	.7[illegible]3,-3	-.123,-2	-.299,-2	-.372,-3	-.126,-2	-.101,-1	-.[illegible]41,-3	-.101,-3
0[illegible]	.118,-2	-.200,-2	-.157,-2	.201,-3	-.159,-2	.146,-3	-.42[illegible],-3	-.552,-2	-.717,-2	-.374,-2
0[illegible]	-.1[illegible]5,-3	-.407,-2	-.175,-2	.427,-3	.165,-2	.274,-2	-.341,-3	.100,-3	-.346,-2	.183,-2
10	-.7[illegible]6,-3	-.276,-2	-.1[illegible]0,-2	.465,-3	.7[illegible]5,-3	.221,-2	.216,-4	-.910,-3	-.10[illegible],-2	.102,-2
11	-.731,-3	.3[illegible],-3	-.472,-3	.1[illegible],-2	-.270,-2	-.[illegible]00,-3	.149,-2	-.3[illegible]4,-2	-.106,-2	-.1[illegible],-3
12	-.117,-2	.147,-2	.132,-2	.142,-2	-.2[illegible]3,-2	-.225,-2	-.191,-2	-.345,-2	-.335,-2	-.254,-2
13	-.7[illegible]5,-3	.3[illegible]5,-4	.24[illegible],-3	.1[illegible],-3	-.140,-2	-.750,-3	-.2[illegible]5,-3	-.[illegible]67,-3	-.42[illegible],-2	-.414,-2
14	-.[illegible]67,-3	-.[illegible]1[illegible],-3	-.27[illegible],-3	-.3[illegible]3,-3	.12[illegible],-2	.21[illegible],-2	.348,-2	.334,-2	-.284,-2	-.313,-2
15	-.132,-2	-.[illegible]6,-3	.3[illegible]4,-4	-.1[illegible]7,-2	.110,-2	.117,-2	.329,-2	.164,-2	-.[illegible]20,-3	-.458,-3
16	-.133,-2	.3[illegible]8,-3	.27[illegible],-3	-.54[illegible],-3	-.120,-2	-.[illegible]42,-3	.2[illegible]6,-2	.157,-2	-.3[illegible]10,-3	-.343,-3
17	-.1[illegible]5,-2	-.104,-2	-.[illegible]27,-3	-.1[illegible],-3	-.1[illegible]1,-2	-.704,-3	.21[illegible],-2	-.7[illegible],-4	-.1[illegible],-2	-.132,-2
1[illegible]	-.12[illegible],-2	-.151,-2	-.127,-2	.3[illegible],-3	-.7[illegible]7,-3	.3[illegible],-3	.12[illegible],-2	-.104,-2	-.[illegible]49,-3	-.[illegible]54,-3
1[illegible]	.10[illegible],-2	.205,-3	-.[illegible]04,-3	.137,-2	-.3[illegible]0,-3	-.70[illegible],-3	-.20[illegible],-3	-.[illegible]43,-3	.257,-2	.154,-2
20	.102,-2	.137,-2	.11[illegible],-2	.224,-2	-.228,-3	-.154,-2	-.1[illegible],-2	.140,-3	.357,-2	.262,-2
21	.[illegible]90,-3	.1[illegible]3,-3	.[illegible]10,-3	.20[illegible],-2	.70[illegible],-3	.[illegible]4[illegible],-3	-.1[illegible],-2	-.140,-2	.270,-2	.204,-2
22	-.12[illegible],-3	-.3[illegible],-3	.3[illegible],-3	.[illegible]11,-3	.[illegible]42,-2	.225,-2	.[illegible]03,-3	-.203,-2	.121,-2	.[illegible]65,-3
23	-.4[illegible]8,-3	.[illegible]43,-3	.[illegible]89,-3	.337,-3	-.[illegible]54,-4	.110,-2	.15[illegible],-2	-.20[illegible],-2	.371,-3	.6[illegible],-3
24	-.897,-3	.716,-3	.3[illegible],-3	.[illegible]51,-3	-.112,-2	-.351,-3	.7[illegible],-3	-.139,-2	.173,-2	.111,-2
25	-.[illegible]17,-3	.[illegible]72,-3	.2[illegible],-3	.1[illegible],-2	-.7[illegible]0,-3	-.[illegible]52,-3	-.2[illegible]0,-3	-.111,-2	.134,-2	.77[illegible],-3
26	-.[illegible]04,-3	.1[illegible],-2	.73[illegible],-3	.1[illegible],-2	.3[illegible],-4	.32[illegible],-3	-.134,-2	.4[illegible],-3	.166,-3	.3[illegible],-4
27	-.[illegible]3[illegible],-3	.41[illegible],-3	-.[illegible]37,-4	.1[illegible],-2	.[illegible]17,-3	.114,-2	-.22[illegible],-2	.23[illegible],-2	.103,-2	.17[illegible],-2
28	-.[illegible]21,-3	-.[illegible]52,-3	-.[illegible]17,-3	-.[illegible]4[illegible],-3	.[illegible]21,-3	.514,-3	-.134,-2	.127,-2	.220,-2	.172,-2
29	-.[illegible]41,-3	-.[illegible]04,-3	-.[illegible]07,-3	-.327,-3	.3[illegible]2,-3	-.[illegible]64,-4	.53[illegible],-3	.[illegible]31,-3	.620,-3	.593,-3
30	-.7[illegible],-4	-.120,-2	-.[illegible]70,-3	-.[illegible]32,-3	.[illegible]65,-3	.[illegible]23,-4	-.23[illegible],-3	.543,-4	.627,-3	.494,-3
31	-.[illegible]04,-3	-.[illegible]49,-3	.12[illegible],-3	-.[illegible]50,-3	.7[illegible]0,-3	.[illegible]03,-3	-.[illegible]08,-3	-.[illegible]482,-3	.443,-3	.891,-3
32	-.10[illegible],-2	.72[illegible],-3	-.[illegible]21,-4	.[illegible]24,-4	-.151,-3	.10[illegible],-3	-.[illegible]33,-3	.23[illegible],-3	-.325,-3	.[illegible]25,-3
33	-.11[illegible],-2	-.[illegible]22[illegible],-3	-.1[illegible],-2	.[illegible]23,-3	.704,-4	.3[illegible],-4	-.[illegible]10,-3	.[illegible]44,-3	.45[illegible],-3	.[illegible]99,-3
34	-.[illegible]36,-3	-.[illegible]1[illegible],-3	-.13[illegible],-2	.[illegible]21,-3	.[illegible]54,-3	.40[illegible],-3	-.[illegible]0[illegible],-3	.539,-3	.422,-3	.367,-3
35	-.31[illegible],-3	-.[illegible]37,-3	-.[illegible]70,-3	-.[illegible]14,-3	.447,-3	.[illegible]17,-3	-.[illegible]31,-3	.138,-3	.381,-3	.313,-3
36	-.[illegible]17,-3	-.[illegible]12,-3	-.122,-3	-.[illegible]11[illegible],-2	-.472,-3	-.[illegible]72,-3	.11[illegible],-3	.15[illegible],-3	-.[illegible]36,-3	-.[illegible]31,-3
37	-.221,-3	-.[illegible]72,-3	-.[illegible]07,-3	-.[illegible]70,-3	-.[illegible]07,-3	-.[illegible]06,-3	.[illegible]35,-4	-.[illegible]67,-3	-.[illegible]66,-3	-.[illegible]49,-3
38	-.10[illegible],-3	.[illegible]04,-3	.[illegible]51,-4	-.[illegible]50,-4	-.311,-4	-.[illegible]03,-3	-.[illegible]21[illegible],-3	-.107,-3	.212,-3	.[illegible]54,-3
39	-.[illegible]59,-3	-.[illegible]51,-4	-.[illegible]3[illegible],-3	.[illegible]00,-3	.[illegible]50,-3	.14[illegible],-3	-.401,-3	-.[illegible]03,-3	.[illegible]97,-3	.[illegible]84,-3
40	-.[illegible]30,-3	-.[illegible]43,-4	-.[illegible]01,-3	.[illegible]35,-3	.[illegible]00,-3	.[illegible]02,-4	-.124,-3	-.[illegible]22,-3	-.[illegible]60,-3	.447,-3
41	-.[illegible]07,-4	.[illegible]01,-3	-.144,-3	.[illegible]33,-4	.174,-3	.[illegible]34,-4	.[illegible]05,-3	-.[illegible]49,-4	-.421,-3	.[illegible]76,-3
42	-.14[illegible],-3	.[illegible]0[illegible],-3	.112,-4	.[illegible]33[illegible],-3	.[illegible]60,-3	-.[illegible]04,-3	.[illegible]35[illegible],-3	-.[illegible]01,-4	.[illegible]55,-3	.177,-3
43	-.[illegible]1[illegible],-4	.[illegible]7[illegible],-3	.112,-3	.[illegible]42,-3	.[illegible]32,-3	-.[illegible]52,-4	.[illegible]42,-3	-.[illegible]30,-3	.214,-3	.[illegible]69,-4
44	-.[illegible]4[illegible],-3	-.1[illegible],-4	-.[illegible]0[illegible],-3	-.[illegible]32,-4	.[illegible]70,-4	-.[illegible]7[illegible],-4	.[illegible]31,-3	-.[illegible]07,-3	.[illegible]47,-3	.[illegible]67,-3
45	-.271,-3	-.[illegible]0[illegible],-3	-.[illegible]74,-3	.[illegible]3[illegible],-4	-.[illegible]00,-3	-.[illegible]03,-4	.145,-3	-.[illegible]52,-3	.[illegible]91,-3	.[illegible]70,-3
46	-.[illegible]02,-4	-.[illegible]72,-4	-.[illegible]17,-3	.[illegible]21,-4	-.[illegible]03,-3	-.[illegible]32[illegible],-4	-.[illegible]02,-3	-.[illegible]27,-3	.[illegible]72,-3	-.[illegible]37,-3
47	.158,-3	-.[illegible]40,-3	-.114,-4	-.[illegible]10[illegible],-2	-.[illegible]37,-3	-.111,-3	-.[illegible]75,-3	-.[illegible]95,-3	.[illegible]47,-3	-.[illegible]16,-3
48	.[illegible]72,-4	-.[illegible]04,-3	-.[illegible]77,-4	-.[illegible]2[illegible],-3	.[illegible]3[illegible],-3	-.[illegible]32[illegible],-3	-.[illegible]10,-3	.[illegible]77,-3	-.[illegible]24,-3	-.[illegible]20,-3
49	-.[illegible]00,-3	.[illegible]01,-3	-.[illegible]5[illegible],-3	-.[illegible]7[illegible],-3	.[illegible]00,-3	.[illegible]10,-4	-.[illegible]54[illegible],-3	.[illegible]79,-3	-.[illegible]62,-3	-.[illegible]15,-3
50	-.[illegible]50,-3	.[illegible]24,-3	.[illegible]1[illegible],-3	-.[illegible]20[illegible],-3	.[illegible]13,-3	-.[illegible]31,-4	-.[illegible]25[illegible],-3	.[illegible]53,-3	.[illegible]79,-4	-.[illegible]79,-4
51	-.[illegible]30,-3	.[illegible]3[illegible],-3	.[illegible]25[illegible],-3	.[illegible]47,-3	.171,-3	-.[illegible]4[illegible],-4	.[illegible]21,-3	.[illegible]73,-3	.765,-4	-.[illegible]35,-3
52	-.[illegible]10,-3	.[illegible]65[illegible],-3	-.[illegible]65[illegible],-4	.[illegible]42[illegible],-3	.[illegible]20,-3	-.[illegible]43[illegible],-3	.[illegible]13,-3	.[illegible]53,-3	-.[illegible]93,-4	-.[illegible]29,-3
53	-.[illegible]01,-4	.[illegible]51[illegible],-3	.[illegible]30,-4	.[illegible]27[illegible],-3	.[illegible]43,-3	.170,-4	.[illegible]45,-3	.113,-4	-.[illegible]07,-3	-.[illegible]59,-3
54	.[illegible]20,-3	.[illegible]757,-4	.111,-3	.[illegible]45[illegible],-4	.[illegible]12,-3	.[illegible]32,-3	.155,-3	.[illegible]55,-3	-.[illegible]19,-3	-.731,-4
55	.[illegible]70,-3	-.[illegible]40[illegible],-4	-.[illegible]50,-3	-.[illegible]50,-3	.[illegible]79,-3	.[illegible]33,-3	-.[illegible]20,-3	.[illegible]37,-3	-.[illegible]73,-4	-.[illegible]58,-3
56	-.[illegible]6[illegible],-4	.[illegible]12,-4	-.[illegible]77,-3	-.[illegible]87,-3	-.[illegible]52,-3	.[illegible]67,-3	.[illegible]53,-4	.[illegible]20,-3	-.[illegible]25,-3	-.[illegible]07,-2
57	.[illegible]53,-4	.[illegible]24,-3	-.[illegible]34,-3	.[illegible]30,-3	-.[illegible]32,-3	.[illegible]08,-3	-.[illegible]52,-3	-.[illegible]21[illegible],-3	-.[illegible]20,-3	-.[illegible]28,-3
58	.[illegible]00,-3	-.[illegible]53[illegible],-4	.[illegible]70,-3	.[illegible]73,-3	-.[illegible]73,-3	.[illegible]03,-3	-.[illegible]07,-4	-.[illegible]73,-4	-.[illegible]06,-3	-.[illegible]05,-4
59	.[illegible]45,-3	-.[illegible]07,-3	-.[illegible]7[illegible],-3	.[illegible]93,-4	-.[illegible]42,-3	-.[illegible]54,-3	.[illegible]03,-3	.[illegible]01,-3	.[illegible]30,-3	.[illegible]51,-3
60	.000	.000	.000	.000	.000	.000	.000	.000	.000	.000

Run No. 56 ; v component

Separation Distance (m.)

N	1	4	5	10	20	21	24	0	24	25
00	.000	.000	.000	.000	.000	.000	.000	.000	.000	.000
01	.102,-3	.379,-3	.652,-3	-.107,-2	.510,-3	.152,-2	.135,-2	-.714,-3	.507,-3	.171,-2
02	-.562,-4	-.660,-3	-.714,-3	-.136,-2	-.335,-3	-.816,-3	.245,-2	.372,-3	.120,-2	.136,-2
03	.247,-3	-.320,-2	-.239,-2	-.143,-2	.499,-4	-.697,-3	.224,-2	.227,-2	.102,-2	.176,-2
04	.774,-3	-.275,-2	-.100,-2	-.027,-3	.134,-2	.149,-2	.944,-3	-.347,-4	.10 ,-2	.113,-2
05	.100,-3	-.4 6,-3	-.125,-3	-.101,-2	.103,-2	.257,-2	-.138,-3	.136,-3	.147,-2	.222,-2
06	.7 1,-	-.147,-2	-.106,-2	.533,-3	.502,-3	.120,-2	-.862,-3	.384,-3	.901,-3	.157,-2
07	.12 ,-	-.274,-2	-.220,-2	.127,-2	.347,-3	.110,-2	-.856,-3	-.987,-3	-.708,-3	-.785,-3
0	.107,-3	-.17 ,-2	-.11 ,-2	-.672,-3	-.515,-3	-.515,-3	.333,-3	.298,-3	-.805,-4	-.622,-3
09	.630,-3	-.704,-3	-.816,-3	-.104,-2	-.325,-3	-.164,-3	.115,-3	.211,-2	.121,-2	.106,-2
10	.718,-3	-.604,-3	-.183,-3	-.530,-3	.117,-2	.112,-2	.396,-3	.155,-2	.101,-2	.144,-2
11	.760,-3	.171,-3	.232,-3	-.645,-3	.142,-2	.105,-2	.888,-3	-.756,-3	-.281,-3	-.514,-3
12	-.151,-3	-.224,-3	-.104,-2	.629,-3	.163,-2	.106,-2	.501,-3	-.146,-2	-.713,-3	-.591,-3
13	.351,-3	-.700,-3	-.134,-2	.102,-2	.150,-2	.956,-3	.119,-2	-.224,-2	-.521,-3	-.258,-3
14	.116,-2	-.808,-3	-.476,-3	.137,-3	.739,-3	.744,-3	-.845,-4	-.155,-2	-.836,-3	-.746,-3
15	.627,-3	-.404,-3	.533,-3	.831,-4	.368,-3	.677,-3	-.139,-2	-.683,-3	-.520,-3	-.686,-3
16	.450,-4	-.338,-3	-.340,-4	-.787,-3	-.050,-4	.705,-3	-.12 ,-2	.112,-3	-.7 4,-4	-.141,-3
17	-.310,-4	-.728,-3	-.100,-2	-.117,-2	.112,-3	.467,-3	-.11 ,-2	-.3 ,-3	-.342,-3	.500,-3
18	.117,-3	-.100,-3	-.833,-3	-.151,-3	.101,-4	.907,-4	-.931,-3	-.309,-3	-.577,-3	-.12 ,-3
19	-.104,-3	-. 97,-2	-.254,-3	.139,-3	-.452,-3	.334,-3	.29 ,-3	.497,-3	-.721,-4	-.172,-3
20	-.530,-3	-.123,-2	-.771,-3	-.719,-3	-.473,-3	.129,-2	.485,-3	-.179,-3	-.220,-3	-.121,-2
21	.321,-4	-.115,-3	-.106,-3	-.554,-3	-.113,-3	.611,-3	-.744,-3	-.40 ,-3	-.119,-2	-.139,-2
22	.511,-3	-.13 ,-3	.400,-3	-.878,-3	-.408,-3	.339,-3	-. 41,-3	-.776,-3	-.9 6,-3	-.207,-3
23	.177,-3	.312,-3	.347,-3	-.404,-3	.691,-4	.478,-3	-.405,-3	-.119,-2	-.1 1,-2	.686,-3
24	.424,-3	-.204,-3	-.104,-2	.346,-3	.504,-3	.231,-4	-.155,-3	-.603,-3	.3 1,-3	.12 ,-3
25	.740,-3	-.201,-3	-.152,-2	.273,-3	.414,-4	-.540,-3	.25 ,-3	.704,-3	-.347,-3	-.376,-3
26	.302,-3	.125,-3	-.16 ,-2	.787,-4	-.213,-3	-.458,-3	.337,-3	.193,-2	-.1 7,-4	.44 ,-3
27	-.141,-3	.274,-4	-.426,-3	-.331,-3	-.112,-3	.201,-4	-.330,-3	-.281,-3	.1 3,-3	.240,-3
28	.120,-3	.221,-3	.113,-3	-.048,-3	-.202,-3	.305,-3	-.344,-3	-.280,-3	-.102,-3	.253,-3
29	.177,-3	-.162,-3	-.273,-3	-.427,-3	-.904,-4	-.217,-3	-.343,-3	-.200,-3	-.304,-3	.345,-3
30	.321,-3	.104,-3	-.200,-3	.304,-3	-.443,-4	-.434,-3	.262,-3	.240,-3	-.675,-3	-.305,-3
31	.370,-3	.107,-3	-.367,-3	.584,-3	.161,-3	-.113,-3	.618,-3	.390,-4	-.455,-3	-.647,-3
32	.102,-3	-.242,-3	.269,-4	.134,-2	.186,-4	-.271,-3	.672,-3	-.244,-3	-.284,-3	-.300,-3
33	-.4 ,-3	-.274,-3	.176,-3	.594,-3	-.467,-3	-.371,-3	.312,-3	-.303,-3	-.1 ,-3	.242,-3
34	. 1 ,-4	.452,-3	-.715,-3	-.483,-3	-.776,-4	.313,-3	.273,-3	-.944,-4	-.111,-3	.100,-3
35	-.1 ,-3	-.263,-3	-.143,-2	-.562,-3	.340,-3	.379,-3	.596,-3	-.573,-4	.70 ,-3	-.345,-3
36	.121,-2	-.702,-3	-.106,-2	-.667,-3	.672,-4	-.284,-3	.241,-3	-.555,-3	.703,-3	-.222,-3
37	.560,-3	-.761,-4	-.103,-2	-.373,-3	-.668,-4	-.123,-3	.309,-4	-.241,-3	.347,-3	.407,-3
38	-.350,-4	.505,-3	-.588,-3	.483,-3	.276,-3	-.147,-3	.131,-3	-.79 ,-3	.35 ,-3	.555,-3
39	-.727,-3	.455,-3	-.332,-3	.93 ,-3	.343,-3	-.515,-3	.369,-3	-.103,-2	-.112,-3	.522,-3
40	-.543,-3	-.127,-3	.633,-3	.446,-3	-.134,-3	-.635,-3	.235,-3	-.144,-2	.713,-4	.305,-3
41	-.105,-3	.930,-4	.105,-2	.777,-3	-.168,-3	-.234,-3	.193,-3	-.98 ,-3	.278,-3	.253,-3
42	-.617,-4	.144,-3	.101,-2	-.425,-3	-.144,-3	-.437,-4	-.624,-4	-.263,-3	.170,-3	-.436,-4
43	.574,-3	-.102,-3	.822,-3	-.606,-3	.173,-3	-.146,-3	-.220,-3	-.37 ,-3	-.211,-4	-.355,-3
44	.702,-3	.470,-3	.39 ,-3	-.209,-3	.297,-3	.937,-4	-.335,-3	.32 ,-3	-.177,-3	-.40 ,-3
45	.543,-3	.504,-3	-.535,-3	.400,-4	.202,-3	.604,-4	-.250,-3	.105,-2	-.272,-3	-.697,-3
46	.32 ,-3	-.10 ,-3	-.403,-3	.470,-3	.148,-3	-.140,-3	-.194,-3	.91 ,-3	-.211,-3	.200,-3
47	.985,-4	-.814,-4	-.430,-3	.654,-3	.642,-3	-.783,-4	-.514,-4	-.24 ,-3	-.656,-3	-.995,-4
48	.373,-4	.124,-4	-.593,-3	.709,-3	.631,-3	-.111,-3	-.242,-4	-.696,-3	-.231,-3	-.211,-3
49	-.746,-4	-.23 ,-3	-.39 ,-3	.938,-3	.445,-3	-.176,-3	-.14 ,-3	-.62 ,-4	-.434,-4	.395,-4
50	-.342,-3	-.324,-3	-.551,-4	.100,-2	-.407,-4	-.153,-3	-.214,-3	-.946,-4	-.243,-3	.225,-3
51	-.2 7,-3	.11 ,-4	-.247,-4	.252,-3	.123,-3	.276,-3	-.141,-3	-.151,-3	.914,-4	.251,-3
52	.102,-4	-.155,-3	.261,-4	-.135,-3	.742,-3	.720,-3	-.472,-3	-.666,-4	-.113,-3	.357,-3
53	.250,-4	-.273,-3	.120,-3	.219,-3	.532,-3	.176,-3	-.587,-3	-.370,-4	-.217,-3	.482,-3
54	.537,-4	-.110,-4	-.759,-4	.313,-3	-.304,-3	.218,-3	-.355,-3	-.247,-3	-.207,-3	.196,-3
55	.924,-4	.361,-3	-.267,-3	.333,-4	-.627,-3	.532,-3	-.108,-3	-.569,-3	-.391,-3	-.302,-3
56	-.283,-3	.470,-3	-.275,-3	-.148,-3	-.305,-3	.354,-3	.027,-4	-.452,-3	-.368,-3	-.440,-3
57	-.105,-3	.105,-3	.121,-4	.397,-4	-.315,-3	-.507,-4	.159,-3	-.185,-3	-.498,-3	-.317,-3
58	.145,-3	-.389,-3	-.200,-3	.364,-3	-.300,-3	-.240,-3	-.113,-3	.400,-3	-.191,-4	-.252,-3
59	.234,-3	-.144,-3	-.166,-3	.203,-3	-.190,-4	-.211,-3	-.313,-4	.335,-3	.499,-4	-.302,-4
60	.000	.000	.000	.000	.000	.000	.000	.000	.000	.000

Run No. 58 ; u component

	Separation Distance (m.)									
K	1	4	5	16	20	21	64	80	84	85
00	.000	.000	.000	.000	.000	.000	.000	.000	.000	.000
01	.925,-4	-.145,-3	.148,-3	-.464,-3	-.572,-3	-.390,-3	.261,-3	-.441,-3	-.288,-3	-.241,-3
02	.190,-3	.735,-4	.107,-3	-.219,-3	-.446,-3	-.268,-3	.513,-3	-.969,-3	.361,-4	.716,-3
03	.400,-3	.681,-4	-.606,-4	-.266,-3	-.257,-3	-.583,-4	.378,-3	-.843,-3	-.124,-3	.546,-3
04	.321,-3	-.215,-3	-.444,-3	-.225,-3	-.134,-3	.160,-3	-.293,-4	-.546,-3	-.645,-4	-.577,-4
05	.167,-3	-.147,-3	-.444,-3	-.396,-4	.674,-4	.160,-3	-.301,-3	-.517,-3	.255,-3	-.231,-3
06	.159,-3	-.278,-4	-.213,-3	-.132,-3	.266,-3	.175,-3	-.136,-3	-.257,-3	.380,-4	-.226,-4
07	.755,-4	.157,-4	.148,-3	-.209,-3	.148,-3	-.553,-4	.558,-4	.227,-3	-.171,-3	-.148,-3
08	-.353,-3	-.233,-3	.184,-3	-.162,-3	.587,-4	-.258,-3	.194,-3	.553,-3	-.505,-4	.113,-3
09	-.887,-3	-.302,-3	.269,-3	-.103,-3	.367,-3	-.102,-3	.591,-3	.443,-3	.250,-3	.661,-3
10	-.436,-3	-.197,-3	-.985,-5	-.514,-4	.139,-3	-.357,-6	.214,-3	-.189,-4	-.703,-4	.257,-3
11	-.125,-4	-.290,-4	-.613,-4	-.103,-3	-.454,-4	-.324,-4	-.167,-3	-.295,-3	-.155,-3	-.213,-4
12	.116,-3	.342,-3	-.159,-3	.469,-5	.137,-3	.174,-3	-.323,-3	-.159,-3	.997,-5	.107,-3
13	.144,-4	.409,-3	-.374,-3	-.265,-4	.189,-4	.234,-3	-.284,-3	-.264,-3	-.279,-4	.998,-4
14	-.132,-3	.264,-3	-.547,-4	-.146,-3	-.394,-4	.610,-4	.654,-4	-.155,-3	-.765,-5	-.676,-4
15	-.386,-4	.218,-3	.378,-4	-.910,-4	.428,-4	.844,-4	.973,-4	.170,-4	.258,-3	-.135,-3
16	-.668,-5	.790,-4	-.100,-3	.152,-4	.128,-3	.467,-4	-.781,-4	.262,-3	.250,-3	-.146,-3
17	-.146,-3	-.751,-4	-.501,-4	.549,-4	.264,-3	.115,-3	-.297,-3	.420,-3	.103,-3	-.117,-3
18	-.207,-3	-.106,-3	-.326,-4	.215,-3	.245,-3	.155,-3	-.448,-3	.220,-3	.101,-3	-.806,-4
19	-.155,-3	-.109,-3	-.971,-4	.208,-3	.987,-5	-.469,-4	-.671,-4	-.145,-3	-.600,-4	-.549,-4
20	.540,-3	-.346,-4	.324,-4	.250,-4	-.493,-4	.344,-4	-.396,-4	-.478,-3	.191,-4	-.186,-3
21	-.194,-3	.988,-4	-.556,-5	-.154,-4	.289,-4	.278,-3	-.196,-3	-.418,-3	.101,-3	-.734,-4
22	-.907,-4	.812,-4	-.260,-3	.197,-4	.746,-4	.124,-3	.506,-4	-.242,-3	.355,-4	-.395,-4
23	.763,-4	.614,-4	-.278,-3	.826,-4	.119,-3	-.562,-4	.134,-3	-.154,-3	-.618,-4	-.159,-3
24	.775,-4	.152,-4	.123,-3	.171,-3	.484,-4	-.141,-3	.643,-4	.137,-3	-.110,-3	-.950,-4
25	-.824,-4	.677,-4	.033,-3	.634,-4	-.474,-4	.123,-4	-.187,-3	.200,-4	-.787,-4	-.620,-4
26	-.220,-3	.121,-3	.236,-4	-.198,-4	.111,-3	.664,-5	-.249,-3	-.463,-3	-.132,-3	-.259,-4
27	-.114,-3	.101,-3	-.827,-5	.404,-4	.184,-3	.826,-4	-.206,-3	-.187,-3	-.123,-3	.271,-5
28	.792,-4	-.423,-4	-.670,-4	.699,-4	.116,-3	.714,-5	-.377,-4	-.644,-4	-.133,-3	.199,-3
29	.981,-4	-.665,-4	-.853,-4	-.251,-4	.395,-4	-.179,-4	.101,-3	-.103,-3	-.144,-3	.281,-3
30	.138,-4	-.130,-4	-.428,-4	-.637,-4	.132,-3	.408,-4	-.671,-4	-.298,-4	-.228,-3	-.633,-5
31	-.390,-4	.635,-4	.282,-5	-.106,-3	.756,-4	.220,-5	-.167,-3	-.186,-4	-.278,-3	-.352,-4
32	.250,-5	.343,-4	-.526,-4	-.138,-4	-.848,-6	.156,-4	-.118,-3	-.172,-4	-.146,-3	.479,-4
33	.387,-4	.391,-4	-.676,-4	.151,-3	-.956,-5	.647,-4	-.262,-3	.465,-4	.257,-4	-.824,-4
34	-.914,-5	.418,-4	.904,-4	.146,-3	.187,-4	.477,-4	-.293,-3	.199,-3	.779,-5	-.171,-3
35	.534,-4	.828,-4	.231,-3	.120,-3	.553,-4	.996,-4	-.142,-3	-.905,-4	-.929,-4	.135,-4
36	.750,-5	-.743,-4	.214,-3	.580,-4	.162,-4	.806,-4	-.797,-4	-.240,-5	-.132,-3	.426,-4
37	-.121,-3	-.140,-3	.830,-4	.103,-3	.392,-4	-.498,-5	-.241,-4	-.361,-4	-.428,-5	-.383,-4
38	-.520,-4	-.736,-4	-.103,-4	.171,-3	.683,-4	-.329,-4	.711,-5	.158,-3	.433,-4	-.844,-4
39	.684,-4	-.644,-4	-.480,-4	.124,-3	-.326,-4	-.791,-4	-.450,-4	.211,-3	-.321,-4	.334,-4
40	.159,-3	-.305,-4	-.672,-5	.676,-4	-.627,-4	-.139,-3	-.138,-3	.967,-4	-.696,-4	.736,-4
41	.123,-3	-.211,-4	.703,-4	-.860,-4	.211,-4	-.687,-4	-.580,-4	-.127,-3	.651,-4	.421,-4
42	.112,-4	.128,-4	.883,-4	-.117,-3	.875,-5	.338,-4	-.390,-4	-.120,-3	.343,-4	.638,-4
43	-.693,-4	-.446,-5	.105,-4	.382,-4	-.342,-4	-.493,-4	-.776,-4	.902,-4	.448,-4	-.701,-4
44	-.112,-4	-.527,-5	.874,-4	.156,-4	-.284,-5	-.439,-4	-.153,-3	.119,-3	.963,-4	-.200,-3
45	-.919,-4	.535,-4	.157,-3	-.440,-4	.364,-4	.593,-4	-.176,-3	-.386,-4	.259,-4	-.128,-3
46	-.251,-4	.107,-3	.137,-3	-.496,-4	.679,-4	-.230,-4	-.364,-4	-.187,-3	-.840,-5	-.123,-3
47	-.665,-4	.242,-4	.996,-4	-.548,-4	.198,-4	-.148,-3	.635,-4	-.168,-3	.190,-4	-.101,-3
48	-.114,-4	-.326,-4	.458,-4	-.994,-4	-.491,-4	-.312,-4	-.414,-4	.200,-4	-.343,-4	-.648,-4
49	.942,-5	-.798,-4	.615,-4	-.285,-4	-.987,-6	.109,-3	-.497,-4	.176,-3	-.212,-4	.715,-5
50	-.381,-4	-.214,-3	.746,-4	.217,-4	.937,-4	.129,-4	.601,-4	.281,-3	.424,-4	-.292,-4
51	-.290,-4	-.148,-3	.488,-4	-.500,-4	.703,-4	-.669,-4	.113,-4	.220,-3	.322,-4	-.115,-3
52	-.436,-4	-.137,-4	-.240,-4	.304,-5	.405,-5	.974,-5	-.377,-4	.128,-3	-.257,-4	-.100,-3
53	-.915,-4	.243,-4	-.616,-4	.177,-3	-.424,-4	.298,-4	-.465,-4	.291,-4	-.233,-4	.149,-4
54	-.465,-4	.900,-4	-.365,-6	.127,-3	-.563,-4	.686,-5	-.408,-4	-.961,-4	.712,-4	.462,-4
55	-.498,-6	.125,-3	.332,-5	-.768,-5	-.992,-5	.572,-4	-.479,-4	-.122,-3	.165,-4	.630,-4
56	-.145,-5	.559,-4	.162,-4	-.407,-4	.591,-4	.678,-4	-.291,-4	-.177,-3	-.551,-4	.316,-4
57	-.199,-4	-.634,-4	.841,-4	-.541,-4	.505,-4	.686,-4	-.289,-4	-.905,-6	-.171,-4	-.439,-5
58	-.235,-4	-.253,-4	.895,-4	.116,-4	.445,-4	.217,-4	-.720,-5	.224,-3	.164,-4	.585,-4
59	-.319,-5	.545,-5	.458,-4	.606,-4	.243,-4	.210,-5	.342,-4	.123,-3	-.215,-5	.387,-4
60	.000	.000	.000	.000	.000	.000	.000	.000	.000	.000

Run No. 56 ; v component

	Separation Distance (m.)									
N	1	4	5	10	20	21	64	80	84	85
00	.000	.000	.000	.000	.000	.000	.000	.000	.000	.000
01	.744,-4	-.244,-3	-.877,-4	-.102,-3	-.374,-3	-.151,-3	.107,-3	.139,-3	.361,-4	.445,-3
02	-.375,-4	-.110,-3	-.144,-3	.102,-3	-.102,-3	.303,-4	-.202,-3	.772,-5	-.352,-3	.101,-3
03	-.654,-4	.106,-4	-.806,-4	.372,-3	.179,-4	.651,-4	-.347,-3	-.779,-4	.772,-5	.523,-4
04	-.133,-3	.303,-5	-.293,-4	-.125,-3	-.24[illegible],-4	-.122,-3	-.666,-5	-.616,-3	.235,-3	-.10[illegible],-4
05	-.342,-4	.202,-3	.[illegible]75,-4	-.325,-3	.524,-4	-.140,-3	-.423,-3	-.702,-3	-.153,-3	-.208,-5
06	.206,-3	.372,-3	-.431,-4	-.605,-5	.218,-3	-.283,-4	.403,-4	-.375,-3	-.306,-3	-.769,-4
07	.1[illegible]0,-[illegible]	.206,-3	-.189,-3	-.144,-3	.249,-3	.350,-4	.181,-3	-.300,-3	-.281,-3	-.905,-4
08	.731,-4	-.492,-4	-.505,-5	-.411,-3	.133,-3	.152,-4	-.601,-4	-.514,-3	-.160,-3	-.156,-3
0[illegible]	-.116,-3	-.214,-3	-.159,-3	-.304,-3	.330,-4	.905,-4	-.329,-3	-.604,-4	.151,-3	.501,-4
10	-.153,-3	-.216,-3	-.402,-3	-.174,-3	.130,-3	.201,-3	-.117,-3	.2[illegible]0,-3	.150,-3	.582,-3
11	.114,-3	-.332,-3	-.407,-3	-.210,-3	.210,-3	.103,-3	-.545,-5	.[illegible]15,-3	-.214,-3	-.501,-4
12	.461,-3	-.242,-3	-.132,-3	-.104,-3	.130,-3	-.921,-5	-.122,-5	-.304,-3	-.107,-4	.302,-4
13	.431,-3	.500,-4	.103,-3	-.194,-3	-.843,-4	-.504,-4	.12[illegible],-3	-.[illegible]70,-4	.275,-3	.505,-4
14	.193,-3	-.152,-4	.133,-3	-.947,-4	-.726,-4	-.914,-4	.450,-3	-.755,-4	-.704,-4	-.[illegible]33,-4
15	.112,-3	-.171,-3	-.188,-4	-.302,-4	-.942,-5	-.447,-4	.[illegible]54,-3	-.374,-4	-.207,-3	-.157,-4
16	.251,-3	.690,-4	-.256,-4	-.[illegible]87,-4	.534,-4	.101,-3	.[illegible]54,-4	.726,-4	-.153,-3	.541,-4
17	.290,-3	.166,-3	.515,-4	-.101,-3	-.291,-4	.221,-3	-.143,-3	-.672,-4	-.215,-3	-.113,-3
18	.295,-3	.126,-3	.132,-3	-.141,-3	-.170,-4	.17[illegible],-3	-.501,-5	.107,-3	.1[illegible],-3	-.160,-3
19	.597,-4	.394,-4	.106,-3	-.237,-3	.866,-4	.161,-3	.221,-3	-.1[illegible],-4	.242,-3	.169,-4
20	.254,-4	-.108,-3	-.235,-4	-.169,-3	.235,-3	.566,-4	.378,-3	-.371,-3	.535,-4	.519,-4
21	.193,-3	-.171,-3	-.624,-4	-.121,-3	.305,-3	-.100,-3	.359,-3	-.234,-3	.226,-3	-.641,-4
22	.125,-3	.702,-4	.971,-4	-.100,-4	.217,-3	-.117,-3	.200,-3	.207,-4	.343,-3	-.208,-3
23	.109,-3	.229,-3	.176,-3	-.155,-5	.493,-4	.115,-4	.110,-3	.161,-3	.331,-4	-.199,-3
24	.201,-3	.115,-3	.153,-3	-.141,-5	-.206,-3	.341,-4	.335,-4	.735,-4	-.237,-4	-.426,-4
25	.255,-3	-.171,-3	.701,-4	-.325,-4	-.357,-3	.535,-5	-.367,-4	-.202,-3	-.602,-5	-.103,-3
26	.100,-3	-.137,-3	.217,-4	-.129,-3	-.133,-3	-.374,-4	-.121,-3	-.210,-3	.372,-4	.407,-4
27	.263,-4	-.505,-4	.907,-4	-.100,-3	-.372,-4	-.570,-4	-.114,-3	-.[illegible]32,-4	-.326,-4	.115,-3
28	.152,-3	-.565,-4	.167,-3	-.676,-4	.436,-4	-.125,-3	-.[illegible]20,-4	.140,-3	.269,-4	-.354,-4
29	.282,-3	-.139,-3	.250,-4	-.909,-4	-.533,-4	-.194,-3	.[illegible]22,-5	.332,-3	.159,-4	-.564,-4
30	.377,-3	-.233,-3	.383,-4	-.808,-4	-.118,-3	-.200,-3	-.[illegible]12,-4	.156,-3	-.103,-3	.416,-4
31	.227,-3	-.146,-3	.112,-3	-.552,-4	-.439,-4	-.836,-4	-.[illegible]38,-4	-.139,-3	-.965,-4	.128,-3
32	.263,-4	-.440,-4	-.594,-5	.101,-4	-.164,-4	-.30[illegible],-4	-.119,-3	-.975,-4	.405,-4	.112,-3
33	.342,-4	-.124,-3	.410,-5	-.976,-5	-.837,-4	-.7[illegible]3,-4	-.133,-3	-.[illegible]90,-4	.176,-3	-.357,-4
34	.216,-3	-.232,-3	-.319,-4	-.570,-4	-.599,-4	-.[illegible]61,-4	-.431,-4	-.274,-3	.[illegible]90,-4	-.104,-3
35	.305,-3	-.104,-3	-.144,-3	-.156,-4	-.514,-4	.373,-4	.[illegible]45,-5	-.161,-3	-.144,-4	.262,-4
36	.244,-3	.372,-4	-.191,-4	-.126,-3	.510,-4	.[illegible]67,-4	-.[illegible]00,-4	-.743,-4	-.269,-5	.871,-4
37	.102,-3	.102,-3	.544,-5	-.142,-3	.144,-3	.424,-4	-.[illegible]79,-4	-.[illegible]60,-4	.178,-3	-.168,-3
38	.583,-4	-.293,-5	-.270,-4	.[illegible]10,-4	.127,-3	.342,-4	.[illegible]93,-4	.[illegible]30,-5	.237,-4	-.243,-3
39	.112,-3	-.484,-4	.[illegible]00,-4	.963,-4	.338,-4	.567,-4	.[illegible]80,-4	.950,-4	-.178,-4	-.232,-3
40	.157,-3	.206,-4	-.[illegible]39,-5	-.372,-4	.228,-4	-.[illegible]98,-4	.665,-4	.129,-4	-.345,-4	-.162,-3
4	.568,-4	.540,-4	-.442,-4	-.574,-4	.278,-4	-.834,-4	.103,-3	-.160,-4	-.202,-3	-.126,-4
42	-.[illegible]08,-4	-.268,-4	-.574,-4	-.[illegible]66,-4	.[illegible]70,-4	.325,-4	.300,-4	-.721,-[illegible]	-.[illegible]96,-3	.[illegible]97,-4
43	.230,-4	-.307,-4	-.[illegible]93,-5	.703,-6	.[illegible]45,-4	.735,-4	.106,-4	-.716,-5	-.137,-3	.103,-3
44	.[illegible]94,-4	.134,-4	.[illegible]38,-4	.424,-4	-.[illegible]43,-5	-.[illegible]29,-4	.451,-4	-.[illegible]75,-4	-.105,-3	.119,-3
45	.423,-4	.[illegible]91,-4	-.462,-4	.310,-4	-.[illegible]20,-5	-.719,-5	.[illegible]86,-4	-.[illegible]43,-4	-.[illegible]54,-4	.572,-4
46	.[illegible]03,-4	.[illegible]92,-4	-.261,-3	.[illegible]29,-5	.[illegible]35,-4	.[illegible]15,-4	-.337,-4	-.144,-4	-.[illegible]32,-4	.[illegible]48,-4
47	.752,-4	.[illegible]58,-4	-.[illegible]95,-3	.[illegible]91,-4	.[illegible]85,-4	.201,-4	-.410,-4	-.[illegible]43,-4	-.[illegible]87,-4	.[illegible]40,-4
48	.[illegible]78,-4	-.[illegible]99,-4	.113,-4	.[illegible]02,-5	.[illegible]05,-4	-.[illegible]95,-4	.[illegible]74,-4	-.[illegible]92,-4	.[illegible]05,-4	.[illegible]35,-4
49	.[illegible]29,-4	-.261,-4	.[illegible]35,-4	-.[illegible]91,-4	.136,-4	-.132,-4	.117,-3	.[illegible]30,-4	.[illegible]19,-4	.[illegible]20,-4
50	.114,-3	.[illegible]71,-4	-.[illegible]03,-5	-.135,-3	.105,-4	-.144,-5	.[illegible]66,-3	-.[illegible]25,-5	-.[illegible]28,-5	-.[illegible]04,-5
51	.[illegible]72,-4	.[illegible]51,-4	.[illegible]71,-5	-.105,-3	-.112,-4	-.[illegible]52,-4	.111,-3	-.[illegible]30,-4	-.[illegible]74,-5	-.[illegible]20,-4
52	.[illegible]10,-4	.[illegible]20,-4	-.[illegible]85,-4	-.[illegible]49,-4	.307,-4	-.[illegible]35,-4	.107,-3	.140,-5	-.203,-5	.[illegible]40,-4
53	-.[illegible]30,-4	.[illegible]57,-4	.[illegible]14,-5	-.[illegible]51,-4	.[illegible]31,-4	.[illegible]59,-4	.[illegible]43,-5	.[illegible]54,-5	.[illegible]14,-5	.[illegible]47,-5
54	-.[illegible]13,-3	.[illegible]80,-4	-.[illegible]33,-4	-.[illegible]42,-4	-.[illegible]61,-5	.[illegible]41,-4	.[illegible]10,-4	.[illegible]35,-4	-.[illegible]03,-4	-.[illegible]43,-4
55	-.[illegible]56,-4	-.[illegible]04,-5	-.[illegible]25,-5	-.[illegible]12,-4	-.[illegible]83,-4	-.[illegible]01,-5	-.[illegible]00,-4	-.[illegible]17,-5	-.[illegible]70,-5	-.[illegible]56,-4
56	.214,-4	-.[illegible]06,-4	-.[illegible]16,-5	-.[illegible]60,-4	-.[illegible]75,-4	-.[illegible]55,-5	-.[illegible]10,-4	.[illegible]40,-5	-.[illegible]14,-4	-.[illegible]73,-5
57	.[illegible]30,-5	.107,-3	.210,-4	.[illegible]51,-4	-.[illegible]05,-4	-.[illegible]25,-4	-.[illegible]03,-4	.[illegible]26,-4	-.243,-4	.110,-3
58	.[illegible]09,-4	.[illegible]94,-3	.[illegible]43,-5	.177,-4	.[illegible]15,-4	-.227,-4	-.[illegible]69,-4	.[illegible]71,-4	-.[illegible]30,-5	.172,-3
59	.565,-4	.168,-3	-.136,-3	-.345,-4	.169,-3	-.575,-6	-.766,-4	.111,-3	-.266,-3	.642,-4
60	.000	.000	.000	.000	.000	.000	.000	.000	.000	.000

Run No. 59 ; u component

Separation Distance (m.)

N	1	4	5	16	20	21	64	80	84	85
00	.000	.000	.000	.000	.000	.000	.000	.000	.000	.000
01	.240,-3	.560,-3	-.127,-2	-.111,-2	-.696,-3	-.153,-3	-.178,-3	-.957,-3	-.534,-3	-.223,-2
02	-.625,-3	-.373,-3	-.533,-5	-.140,-2	-.583,-3	.713,-3	.458,-3	.443,-3	-.100,-2	-.135,-2
03	-.126,-2	.436,-3	.165,-3	-.261,-2	-.807,-3	-.914,-3	-.216,-4	-.583,-4	-.143,-2	-.538,-3
04	.359,-3	.119,-2	.320,-3	-.203,-2	-.171,-2	-.685,-3	.127,-3	-.378,-3	-.780,-3	.576,-3
05	.162,-3	.106,-2	.734,-3	-.813,-3	-.555,-3	.574,-3	.950,-3	-.369,-4	.648,-3	.102,-2
06	.726,-4	.228,-3	.281,-3	.102,-2	.935,-3	.123,-2	.697,-3	.355,-3	.101,-2	-.328,-4
07	.542,-3	.939,-4	.143,-3	.761,-3	.358,-3	.159,-3	-.548,-3	.215,-3	.236,-3	-.623,-3
08	.734,-3	-.348,-3	.276,-3	.122,-2	-.141,-3	-.366,-3	-.513,-3	.504,-4	-.776,-3	-.840,-3
09	.454,-3	-.454,-3	-.478,-3	.503,-3	.472,-3	-.209,-3	.39-,-3	.524,-4	-.101,-2	-.543,-3
10	.142,-3	.565,-4	-.709,-3	.533,-3	.241,-3	-.274,-4	.261,-3	.195,-3	-.423,-3	-.511,-4
11	-.286,-3	.142,-3	.208,-3	.721,-3	-.612,-5	-.595,-3	-.670,-4	-.267,-4	.446,-3	-.906,-4
12	.490,-3	.102,-3	.259,-3	.661,-3	-.150,-3	-.754,-3	.328,-3	.442,-4	.538,-3	-.950,-5
13	.754,-3	.273,-3	-.141,-3	.144,-3	-.270,-3	-.939,-3	.671,-4	-.537,-4	.557,-3	.563,-3
14	.662,-3	.216,-3	-.988,-4	.101,-3	-.315,-3	-.942,-3	-.240,-3	.176,-4	.668,-3	.663,-3
15	.585,-3	.962,-4	-.485,-3	.515,-3	-.640,-3	-.939,-3	-.203,-4	-.188,-3	.187,-3	.276,-3
16	.561,-3	.371,-3	-.354,-3	.103,-2	-.751,-3	-.605,-3	.997,-4	-.301,-3	-.534,-3	.590,-4
17	-.156,-3	.210,-3	-.443,-3	.558,-3	-.312,-3	-.296,-3	-.278,-4	-.396,-3	-.495,-3	.170,-3
18	-.765,-3	-.139,-3	-.100,-2	.837,-4	-.422,-3	-.117,-4	-.116,-3	-.514,-3	-.929,-4	.397,-3
19	-.617,-3	-.116,-3	-.101,-2	-.274,-4	-.285,-4	.354,-3	.162,-3	-.700,-3	-.198,-3	.368,-3
20	-.155,-3	.703,-4	-.523,-3	-.318,-3	.362,-3	.333,-3	.452,-3	-.394,-3	-.169,-3	.597,-4
21	-.121,-3	.227,-3	-.165,-3	-.295,-3	.235,-3	-.324,-3	.289,-3	-.444,-4	-.877,-5	.423,-4
22	.136,-3	-.116,-3	.273,-4	.150,-3	-.860,-4	-.506,-3	-.158,-3	-.245,-4	.123,-3	-.124,-3
23	-.449,-4	-.252,-3	.411,-3	.308,-3	-.376,-4	-.797,-5	-.827,-4	-.414,-3	.205,-3	-.638,-4
24	.171,-5	-.529,-4	.224,-3	.794,-4	-.129,-3	-.107,-3	.124,-3	-.317,-3	.329,-4	.930,-4
25	-.206,-3	.351,-4	-.100,-3	-.275,-4	-.543,-3	-.370,-3	.167,-3	.160,-3	-.181,-3	.199,-3
26	-.333,-3	.443,-4	.236,-3	.868,-4	-.470,-3	-.160,-3	.307,-3	.105,-3	.295,-4	.248,-3
27	-.197,-3	.186,-3	.386,-3	.193,-3	-.185,-3	.126,-3	.346,-3	-.871,-4	.123,-3	.175,-3
28	-.190,-3	-.179,-4	.147,-3	.209,-3	.369,-3	-.485,-5	.252,-4	-.134,-3	.305,-3	.110,-3
29	-.227,-3	-.101,-3	.162,-3	.265,-3	.371,-3	-.189,-3	-.190,-3	-.146,-3	.299,-3	-.926,-4
30	-.225,-3	-.140,-3	.136,-3	.195,-3	.209,-3	-.788,-4	-.151,-3	-.118,-4	.481,-4	-.125,-3
31	-.138,-3	-.182,-3	.114,-3	.104,-3	.655,-4	-.958,-4	-.145,-3	-.529,-5	.493,-4	-.150,-4
32	.798,-4	-.297,-5	.232,-4	.706,-4	-.108,-3	-.128,-3	-.219,-3	-.201,-3	.115,-3	-.145,-4
33	.175,-3	-.194,-3	-.480,-4	.165,-3	-.715,-4	.663,-4	-.130,-4	-.264,-3	.192,-3	-.233,-3
34	.557,-4	.197,-4	-.173,-3	.240,-3	.371,-4	.240,-3	.118,-3	.154,-4	.190,-3	-.241,-3
35	.543,-4	.647,-4	-.665,-4	.520,-4	.861,-4	.148,-3	.839,-4	.102,-3	.150,-3	.360,-4
36	.165,-3	-.317,-4	-.169,-3	-.212,-3	.366,-4	.686,-4	-.767,-4	.426,-4	.124,-3	-.107,-3
37	-.340,-4	-.565,-4	-.274,-3	-.383,-3	.351,-4	-.116,-4	-.354,-4	.136,-3	-.406,-5	-.249,-3
38	-.100,-3	-.221,-3	-.117,-3	-.301,-3	.385,-4	-.470,-4	.128,-3	.139,-3	-.960,-4	-.113,-3
39	-.169,-5	-.221,-3	-.183,-4	-.143,-3	-.283,-4	.144,-3	-.135,-5	.366,-4	-.533,-4	-.473,-4
40	.913,-4	.435,-4	-.405,-4	-.176,-4	.478,-4	.951,-4	-.285,-4	.899,-4	.511,-4	-.845,-4
41	-.219,-4	.100,-3	-.435,-4	.152,-3	-.555,-5	.519,-4	.342,-4	.155,-3	-.994,-5	-.302,-4
42	-.155,-4	.668,-4	-.206,-3	.334,-3	-.102,-4	.162,-3	.340,-4	.156,-3	-.168,-4	-.118,-3
43	-.104,-3	.610,-4	-.155,-3	.702,-4	.186,-3	-.225,-4	.741,-4	-.916,-4	.268,-3	-.102,-3
44	-.163,-3	.838,-5	.993,-4	-.700,-4	.201,-3	-.984,-4	.130,-3	-.211,-3	.320,-3	.104,-3
45	-.883,-4	-.712,-4	-.263,-4	.513,-4	.278,-4	.296,-5	.128,-4	-.154,-3	.627,-4	.198,-3
46	-.428,-4	-.286,-4	-.172,-3	.900,-4	.138,-4	.116,-4	-.500,-6	-.241,-4	-.118,-3	.259,-3
47	-.102,-3	.739,-4	-.175,-3	.232,-4	-.527,-5	.330,-4	.887,-4	.146,-3	-.859,-4	.142,-3
48	-.179,-3	.897,-4	-.208,-3	-.150,-3	-.104,-4	-.925,-4	.142,-3	.802,-4	.392,-4	-.313,-4
49	-.125,-3	-.289,-4	.521,-4	-.140,-3	-.981,-4	-.739,-4	.721,-4	.244,-4	.963,-4	.762,-5
50	-.105,-3	-.434,-3	.201,-3	-.178,-3	-.207,-3	.298,-4	.351,-4	.104,-3	.733,-4	.109,-3
51	-.805,-4	-.152,-3	.203,-3	-.142,-3	-.165,-3	.100,-3	.985,-4	.361,-4	.407,-4	.996,-4
52	-.317,-4	-.443,-5	.182,-3	-.758,-4	.186,-4	.739,-4	.207,-3	-.111,-3	-.395,-4	.744,-4
53	-.117,-3	-.370,-4	.110,-3	-.594,-4	.113,-3	.367,-4	.167,-3	.734,-4	-.288,-4	-.469,-4
54	-.413,-4	.348,-4	.145,-5	.191,-4	.445,-4	.113,-3	.652,-4	.160,-3	-.438,-4	-.113,-4
55	.464,-4	.233,-4	-.971,-5	-.589,-4	-.341,-4	.180,-3	-.643,-4	.158,-4	-.185,-4	-.104,-4
56	.67-,-4	-.861,-4	.170,-4	-.150,-3	-.324,-5	.217,-3	-.119,-3	-.637,-4	-.508,-5	-.215,-4
57	.118,-3	-.166,-4	.259,-4	-.895,-4	-.451,-4	.171,-3	-.690,-4	-.368,-4	-.829,-4	.829,-4
58	.471,-4	.432,-4	-.604,-5	-.111,-4	-.837,-4	.933,-4	-.572,-4	-.815,-4	-.343,-4	.232,-4
59	-.156,-4	-.255,-4	-.129,-4	.412,-4	-.926,-4	.925,-4	-.153,-3	-.484,-4	.725,-4	-.945,-4
60	.000	.000	.000	.000	.000	.000	.000	.000	.000	.000

Run No. 59 ; v component

Separation Distance (m.)

N	1	4	5	10	20	21	64	80	84	85
	.000	.000	.000	.000	.000	.000	.000	.000	.000	.000
1	.772,-3	-.209,-3	.269,-3	-.542,-3	-.209,-2	-.318,-3	.085,-3	-.115,-3	-.319,-2	-.439,-3
2	.494,-3	.868,-3	.374,-3	-.425,-3	-.120,-2	.410,-4	.163,-4	.127,-2	-.390,-3	.322,-3
3	.511,-3	-.205,-3	-.548,-3	-.133,-3	-.522,-3	.409,-4	-.119,-2	-.148,-2	-.840,-3	.301,-3
4	.545,-3	-.328,-3	-.320,-3	-.359,-3	-.283,-3	-.152,-3	-.119,-2	-.333,-2	-.141,-2	-.100,-3
5	.283,-3	-.109,-2	-.416,-3	-.300,-3	-.269,-3	-.145,-3	-.461,-3	-.168,-2	-.107,-2	-.792,-3
6	-.835,-4	-.576,-3	-.204,-3	.285,-3	-.258,-3	-.216,-3	-.518,-3	-.113,-3	-.607,-3	-.179,-2
7	-.208,-3	-.777,-3	.558,-3	.971,-3	-.235,-3	-.272,-3	.461,-4	-.229,-3	-.305,-3	-.222,-2
8	-.267,-3	-.643,-3	.372,-3	.445,-3	.142,-3	.335,-4	.223,-3	.349,-3	-.213,-3	-.194,-2
9	-.612,-3	-.677,-3	-.354,-3	-.463,-3	.407,-3	.403,-3	-.126,-4	.105,-2	-.632,-3	-.144,-2
10	.267,-3	.199,-3	-.535,-3	.443,-4	.357,-3	.163,-3	.281,-3	.337,-3	-.313,-4	-.697,-3
11	-.213,-3	.270,-3	-.151,-3	.463,-3	.224,-4	-.103,-3	.440,-3	-.366,-3	-.123,-4	-.229,-3
12	-.750,-3	-.192,-3	.104,-3	.163,-3	.155,-4	-.375,-4	.230,-3	.292,-4	-.309,-3	.344,-4
13	-.958,-3	-.234,-3	-.260,-3	-.129,-3	.229,-3	.113,-4	.121,-3	.553,-3	-.269,-3	.592,-3
14	-.559,-3	-.145,-3	-.105,-2	-.776,-4	.215,-3	.504,-4	.165,-3	.109,-2	.782,-4	.602,-3
15	-.242,-3	.243,-3	-.087,-3	-.910,-4	-.144,-3	-.962,-4	.347,-3	.995,-3	.422,-3	.907,-5
16	-.324,-3	.400,-4	-.469,-3	-.362,-3	-.968,-4	.171,-3	.543,-3	-.257,-3	-.876,-4	-.503,-4
17	-.293,-3	-.563,-3	-.347,-3	-.441,-3	.110,-3	.102,-3	.361,-3	-.479,-3	.269,-5	.349,-3
18	-.336,-3	-.465,-3	-.359,-3	-.336,-3	.251,-3	.117,-3	.322,-3	.594,-4	.575,-3	.353,-4
19	-.163,-3	.909,-5	-.186,-3	.352,-3	.286,-3	.239,-3	.386,-3	.215,-3	.517,-3	-.858,-4
20	-.139,-4	-.642,-4	-.323,-4	.175,-3	.333,-3	-.509,-4	.141,-3	.640,-3	-.260,-3	.135,-3
21	.515,-4	-.441,-3	-.769,-4	.157,-3	.151,-3	-.367,-3	.621,-4	.783,-3	-.519,-3	.137,-3
22	-.147,-3	-.436,-3	.151,-3	.344,-3	.320,-4	-.411,-3	-.375,-4	.134,-3	-.302,-3	.363,-3
23	-.152,-3	.155,-3	.423,-3	.238,-3	-.212,-3	-.440,-3	-.324,-3	-.402,-3	-.712,-4	.336,-3
24	.225,-3	.217,-3	-.205,-4	-.242,-4	-.203,-3	-.452,-3	-.339,-3	-.159,-3	-.122,-3	.137,-3
25	.246,-3	.112,-3	-.282,-3	-.480,-4	.253,-4	-.377,-3	-.249,-3	.114,-3	-.389,-3	.162,-3
26	-.119,-3	.642,-4	-.185,-3	-.106,-3	.763,-4	.546,-4	-.153,-3	.183,-3	-.193,-3	.249,-3
27	-.119,-3	-.105,-3	.134,-3	-.243,-4	.125,-4	.419,-3	-.512,-4	-.725,-4	-.348,-4	.335,-3
28	-.259,-3	.446,-4	.654,-4	.961,-4	-.725,-4	.203,-3	-.222,-4	-.134,-3	.118,-3	.189,-3
29	-.130,-3	.281,-3	.548,-3	.115,-3	-.696,-4	-.317,-4	-.706,-4	-.332,-3	.252,-3	.346,-3
30	.364,-4	.839,-4	.231,-3	-.144,-3	-.640,-4	-.113,-3	-.100,-4	-.424,-3	.472,-3	.374,-3
31	-.155,-4	-.740,-4	.611,-4	-.369,-3	.507,-5	-.104,-3	.250,-3	.331,-4	.565,-3	.249,-3
32	.685,-5	.366,-4	-.168,-3	-.454,-3	.152,-3	-.523,-4	.167,-3	.313,-3	.150,-3	-.118,-3
33	.141,-3	.455,-4	-.127,-3	-.239,-3	.750,-4	.759,-4	-.183,-3	.110,-3	-.692,-4	-.373,-3
34	.569,-4	-.856,-4	-.830,-4	.454,-5	-.539,-4	.470,-4	-.239,-3	-.226,-4	.523,-4	-.104,-3
35	-.452,-4	.463,-4	.192,-3	-.354,-4	-.100,-3	-.281,-4	-.817,-5	-.349,-3	.518,-4	.367,-4
36	-.818,-5	.284,-4	.156,-3	-.129,-3	-.149,-3	-.168,-3	.741,-4	-.318,-3	-.288,-4	-.129,-3
37	-.446,-4	-.324,-4	-.983,-5	-.144,-3	-.105,-3	-.232,-3	.853,-4	-.162,-3	-.676,-4	-.144,-3
38	-.176,-3	.676,-4	.286,-4	-.517,-4	.129,-3	-.538,-4	-.974,-5	-.855,-4	-.468,-4	-.183,-3
39	-.272,-3	-.200,-4	.220,-3	-.209,-4	.256,-3	.749,-4	-.204,-3	-.114,-3	-.622,-4	-.302,-3
40	-.307,-3	-.157,-3	.910,-4	-.295,-6	.150,-3	-.613,-4	-.208,-3	-.177,-3	-.167,-4	-.201,-3
41	-.182,-3	-.259,-3	-.650,-4	.489,-4	.351,-4	-.218,-3	-.132,-3	-.221,-3	.965,-4	-.372,-5
42	-.782,-4	-.215,-3	-.599,-4	.760,-4	.117,-3	-.291,-3	-.190,-3	-.127,-4	.177,-3	.114,-3
43	-.826,-4	-.147,-3	-.124,-3	-.267,-4	.132,-3	-.307,-3	-.482,-5	.157,-3	.205,-3	.984,-4
44	.403,-4	-.992,-5	-.228,-4	-.137,-3	.616,-4	-.150,-3	.119,-3	.114,-3	.459,-4	-.118,-4
45	.866,-4	.120,-3	.164,-3	-.107,-3	.615,-4	-.448,-4	-.556,-4	.401,-4	-.181,-4	.637,-4
46	-.786,-4	.956,-4	.173,-3	.242,-4	.291,-4	-.605,-4	-.154,-3	.112,-3	-.366,-4	.145,-3
47	-.945,-4	-.153,-3	.130,-3	.517,-4	-.769,-4	-.433,-4	-.732,-4	.594,-4	-.651,-4	-.876,-4
48	-.952,-4	-.153,-3	.789,-4	-.295,-4	-.123,-3	-.923,-4	-.183,-5	.296,-4	-.326,-5	-.264,-3
49	-.653,-4	.890,-4	.646,-4	-.375,-4	-.583,-4	-.143,-5	-.799,-4	.105,-3	-.365,-4	-.953,-4
50	-.112,-3	.118,-3	-.327,-4	.714,-4	-.394,-4	-.337,-4	-.308,-4	-.388,-4	-.769,-4	-.556,-4
51	-.120,-3	.654,-4	-.104,-3	.528,-4	-.390,-4	-.120,-3	.119,-3	-.217,-3	-.117,-3	-.283,-3
52	-.145,-4	.165,-3	-.352,-4	-.391,-4	.822,-5	-.170,-3	.107,-3	-.216,-3	-.816,-4	-.110,-3
53	-.513,-4	.260,-3	-.115,-4	.138,-4	.136,-3	-.138,-3	-.489,-4	-.108,-3	-.474,-4	-.731,-4
54	-.856,-4	.102,-3	.817,-5	.189,-3	.213,-3	-.487,-4	-.177,-4	.100,-3	.305,-4	-.146,-3
55	-.127,-4	-.376,-4	-.135,-4	.279,-3	.188,-3	.570,-4	-.162,-4	.180,-3	.141,-3	-.362,-4
56	-.449,-4	-.154,-5	-.104,-3	.268,-3	.250,-4	.202,-4	.165,-4	.808,-4	.988,-4	.372,-4
57	-.516,-4	.764,-4	-.200,-3	.119,-3	-.176,-3	.316,-4	.133,-4	-.126,-4	-.699,-4	-.197,-3
58	-.151,-3	-.165,-3	-.219,-3	-.223,-4	-.185,-3	-.482,-4	-.212,-4	-.107,-3	-.203,-4	-.183,-3
59	-.180,-3	-.223,-3	-.234,-4	.199,-4	-.377,-4	-.120,-3	-.102,-3	-.176,-3	.135,-3	-.225,-4
60	.000	.000	.000	.000	.000	.000	.000	.000	.000	.000

Run No. 60 ; u component

Separation distance (r_s)

s	1	4	7	10	20	31	40	50	65	80
00	.000	.000	.000	.000	.000	.000	.000	.000	.000	.000
01	-.207,-3	.494,-2	.734,-2	-.515,-2	-.195,-2	-.277,-3	-.267,-1	-.316,-2	-.180,-1	-.173,-1
02	.183,-2	-.327,-2	-.476,-2	-.686,-2	-.[illegible],-2	-.362,-2	-.144,-1	-.165,-2	-.603,-2	-.375,-2
03	.301,-2	-.105,-1	-.114,-1	.318,-2	-.443,-2	-.189,-2	.162,-1	.490,-2	.148,-1	.199,-1
04	.146,-2	-.820,-2	-.700,-2	.887,-2	-.337,-2	-.394, 2	.166,-1	.827,-3	.104,-1	.137,-1
05	.124,-2	-.374,-3	.280,-2	.457,-2	-.696,-2	-.871,-2	.867,-2	-.520,-2	.787,-3	-.861,-3
06	.408,-3	.235,-4	.256,-2	.454,-2	-.478,-2	-.550,-2	.622,-2	-.270,-2	.124,-2	-.330,-2
07	-.413,-3	-.165,-2	.178,-2	.555,-2	-.116,-2	-.107,-2	-.143,-2	.433,-3	.236,-3	-.927,-3
08	-.133,-3	-.335,-2	-.227,-2	.272,-2	-.397,-2	-.382,-2	-.328,-2	-.332,-2	-.995,-3	.900,-4
09	.820,-3	-.300,-2	-.147,-2	.677,-3	-.272,-2	-.236,-2	-.275,-2	-.392,-2	.226,-2	.407,-2
10	.122,-2	-.305,-4	.611,-3	.358,-4	.234,-3	.112,-2	.983,-3	-.218,-2	.247,-2	.230,-2
11	.222,-3	.594,-3	-.101,-2	-.147,-2	-.198,-2	-.686,-3	.565,-2	.837,-3	-.216,-3	-.454,-2
12	-.110,-3	.692,-3	-.189,-3	-.252,-2	-.223,-2	-.162,-2	.384,-2	.735,-3	.109,-2	-.271,-2
13	.164,-2	.255,-3	.857,-3	-.241,-2	.104,-2	.110,-2	-.244,-3	-.201,-2	.172,-2	-.102,-3
14	.113,-2	-.186,-3	.730,-3	-.970,-3	.161,-2	.166,-2	-.141,-2	-.148,-4	.211,-2	.247,-2
15	-.588,-4	.199,-2	.169,-2	.779,-4	-.220,-4	.111,-2	-.329,-3	.978,-3	.193,-2	.236,-2
16	-.903,-4	.256,-2	.168,-2	.724,-3	-.205,-3	.665,-3	.727,-4	-.162,-2	.208,-3	.242,-3
17	.351,-3	.326,-3	.178,-2	.930,-3	.100,-2	.143,-2	.178,-3	-.285,-2	-.211,-2	-.259,-2
18	.354,-3	-.237,-2	-.719,-4	.147,-2	-.828,-4	-.134,-3	-.838,-3	-.349,-2	-.173,-2	-.168,-2
19	.578,-3	-.265,-2	-.112,-2	.298,-3	-.719,-3	-.175,-2	-.911,-3	-.142,-2	-.153,-2	-.173,-2
20	.534,-3	-.433,-3	-.368,-3	-.110,-2	-.132,-2	-.166,-2	-.375,-3	-.693,-4	-.927,-3	-.158,-2
21	.498,-3	.788,-3	-.417,-3	-.167,-2	-.301,-3	.993,-3	-.666,-3	-.851,-3	-.512,-3	-.945,-3
22	.188,-3	-.723,-3	-.135,-2	-.177,-3	.392,-3	.131,-2	-.149,-2	-.115,-2	-.237,-3	-.328,-3
23	-.246,-3	-.802,-3	-.196,-3	.108,-2	-.211,-3	.425,-3	-.133,-2	-.118,-2	.145,-3	.911,-3
24	-.594,-3	.156,-3	.586,-3	.581,-3	.639,-5	.173,-3	.399,-3	-.241,-2	-.192,-4	.131,-2
25	.257,-3	.255,-3	.975,-4	.978,-5	.605,-3	.266,-3	.971,-4	-.178,-2	-.272,-3	-.499,-3
26	-.195,-4	-.351,-4	-.352,-3	-.122,-3	.495,-3	.157,-3	-.300,-3	-.689,-3	-.158,-3	-.914,-3
27	-.116,-3	-.699,-3	-.530,-3	-.343,-3	.734,-3	.541,-3	.628,-5	-.329,-3	-.241,-3	-.291,-3
28	-.355,-3	-.326,-3	.691,-4	.229,-3	.209,-3	.919,-3	.134,-3	-.580,-3	-.262,-3	.382,-3
29	-.554,-3	.795,-3	.749,-3	.618,-3	-.516,-3	.386,-3	.689,-3	-.834,-3	-.701,-3	.378,-3
30	-.400,-3	.713,-3	.200,-3	.465,-3	-.745,-3	-.446,-4	.593,-3	-.303,-3	-.162,-3	.112,-3
31	-.291,-4	.443,-3	-.353,-3	.211,-3	-.144,-3	.467,-3	-.210,-3	.619,-3	-.307,-5	-.162,-3
32	.227,-3	.662,-3	-.127,-3	.951,-3	.128,-3	.727,-3	-.212,-3	.257,-3	-.621,-3	-.474,-3
33	.392,-3	.244,-3	-.460,-4	.219,-3	.193, 4	.852,-3	.627,-4	-.601,-3	-.291,-3	-.453,-3
34	.397,-4	.103,-3	-.178,-3	-.582,-4	.110,-4	.477,-3	-.101,-4	-.157,-2	-.461,-3	-.358,-3
35	.107,-3	.347,-4	.110,-3	.115,-3	.130,-3	.109,-3	.668,-4	-.144,-2	-.486,-3	.388,-4
36	.544,-3	-.384,-4	.162,-3	.246,-3	-.515,-4	.104,-3	.164,-3	-.817,-3	.370,-3	.390,-4
37	.471,-3	-.698,-3	-.159,-3	.331,-3	-.461,-3	-.654,-4	.137,-4	-.675,-3	.441,-3	-.542,-4
38	.110,-3	-.796,-3	-.129,-3	.350,-3	-.470,-3	-.166,-3	-.279,-3	-.758,-3	.490,-3	.114,-3
39	.911,-4	-.469,-3	-.927,-4	-.451,-4	-.391,-3	-.241,-3	-.654,-3	-.264,-3	.158,-3	.234,-3
40	.158,-3	-.352,-3	.119,-3	-.319,-4	-.375,-3	-.431,-3	-.949,-3	.210,-3	-.291,-3	.173,-3
41	.706,-4	-.347,-3	-.259,-3	.279,-3	-.356,-3	-.233,-3	-.647,-3	.964,-3	-.358,-3	-.535,-4
42	-.122,-5	-.134,-3	-.108,-3	.224,-3	.164,-4	.148,-3	-.105,-3	.713,-3	.556,-5	.342,-4
43	.215,-3	.117,-3	.285,-4	-.474,-3	.372,-3	.376,-3	-.118,-3	-.166,-3	.210,-3	.351,-4
44	.268,-3	-.905,-4	-.283,-3	-.626,-4	.131,-3	.271,-3	.149,-3	-.399,-3	.336,-4	.385,-3
45	.814,-4	-.129,-3	.173,-3	.390,-3	-.481,-4	-.425,-4	.184,-3	-.225,-3	-.458,-3	.385,-3
46	.396,-4	.352,-3	.267,-3	.248,-3	-.335,-3	-.334,-3	-.182,-3	-.462,-3	-.552,-3	.885,-4
47	.410,-3	.745,-3	.302,-3	.188,-4	-.374,-3	-.457,-3	-.586,-3	.436,-3	-.476,-3	-.384,-3
48	.549,-3	.651,-3	.372,-3	.126,-3	-.235,-3	-.159,-3	-.115,-3	.784,-3	-.534,-3	-.223,-3
49	.367,-3	.625,-4	.432,-4	.394,-4	.175,-4	-.165,-3	.442,-3	.113,-3	-.342,-3	-.124,-3
50	.486,-3	-.227,-3	.317,-3	.750,-4	-.259,-3	-.452,-3	-.359,-3	-.706,-3	.116,-3	.458,-3
51	.382,-3	-.269,-3	.601,-3	.240,-3	-.184,-3	-.166,-3	-.613,-3	-.503,-3	.212,-3	.585,-3
52	.320,-4	-.277,-3	.138,-3	-.414,-4	.354,-3	.270,-3	-.120,-3	-.147,-3	.178,-3	.248,-3
53	-.482,-4	-.994,-4	.203,-3	-.360,-3	.279,-3	.160,-3	.653,-4	.952,-4	.106,-3	.179,-3
54	-.343,-3	.532,-4	.523,-3	-.669,-4	-.281,-3	-.248,-3	.302,-3	.943,-4	-.376,-3	-.116,-3
55	-.389,-3	.485,-3	.374,-3	.258,-3	-.324,-3	-.546,-4	-.922,-4	-.299,-3	-.751,-3	-.327,-3
56	-.490,-4	.455,-3	193,-4	.113,-3	-.856,-4	.393,-3	-.657,-3	-.525,-3	-.468,-3	-.153,-3
57	-.130,-3	-.488,-4	-.144,-3	.167,-3	.578,-4	.806,-3	-.520,-3	-.333,-3	.172,-3	.106,-3
58	-.116,-3	-.137,-4	.608,-4	.557,-3	.185,-3	.266,-3	-.416,-4	.309,-3	.446,-3	-.735,-4
59	.369,-5	.276,-3	-.104,-3	.313,-3	.410,-3	-.171,-3	.414,-4	.211,-3	.279,-3	-.135,-3
60	.000	.000	.000	.000	.000	.000	.000	.000	.000	.000

Run No. 60 ; v component

	Separation Distance (m.)									
N	1	4	5	16	20	21	64	80	84	85
00	.000	.000	.000	.000	.000	.000	.000	.000	.000	.000
01	-.562,-3	.248,-3	.136,-2	.160,-2	.241,-2	.226,-2	-.198,-2	.307,-2	.256,-2	.275,-2
02	-.561,-3	.465,-3	.323,-4	.176,-2	.229,-2	.130,-2	-.383,-2	-.354,-3	-.105,-2	.298,-3
03	.478,-3	-.784,-3	-.710,-3	.106,-2	.102,-2	.313,-3	-.990,-3	-.168,-2	-.421,-3	-.983,-3
04	.910,-3	-.121,-2	-.127,-3	.101,-2	.352,-3	-.233,-3	-.033,-5	-.176,-2	-.104,-2	-.792,-3
05	.115,-2	-.109,-2	-.152,-3	.176,-2	.293,-3	.722,-3	-.220,-2	-.151,-3	-.503,-3	.187,-3
06	.918,-3	-.818,-3	-.824,-3	.180,-2	.117,-3	.432,-3	-.113,-2	.141,-2	-.391,-4	.337,-3
07	.566,-3	-.440,-3	-.835,-3	.504,-3	-.525,-3	-.129,-3	.965,-3	.960,-3	-.782,-3	.452,-3
08	.180,-3	-.159,-3	-.869,-3	-.115,-2	-.123,-2	-.874,-3	.134,-2	.675,-3	-.131,-2	-.706,-3
09	.434,-3	-.584,-3	-.108,-2	-.131,-2	-.956,-3	-.340,-3	.821,-3	.575,-4	.581,-3	.177,-3
10	.113,-2	-.867,-3	-.346,-3	-.383,-3	-.736,-3	-.331,-3	.164,-2	-.583,-3	.116,-2	-.134,-4
11	.107,-2	-.617,-3	.833,-3	-.163,-3	-.808,-3	-.860,-3	.135,-2	.508,-3	-.455,-3	-.115,-2
12	.307,-3	-.256,-3	.419,-3	.388,-3	.476,-3	.421,-3	.545,-3	-.640,-4	-.144,-2	-.513,-3
13	-.133,-3	-.256,-3	-.320,-3	-.165,-3	.107,-2	.770,-3	.121,-2	-.289,-3	-.679,-3	-.237,-4
14	.428,-4	-.153,-3	-.120,-2	.448,-3	.125,-2	-.629,-3	.140,-2	.888,-3	-.937,-3	.456,-3
15	.922,-3	-.478,-4	-.125,-2	.345,-3	.866,-3	.222,-3	.563,-3	.572,-3	-.714,-3	.187,-2
16	.680,-3	-.364,-3	-.310,-3	.745,-3	-.315,-4	.308,-3	-.867,-4	-.001,-3	.505,-3	.199,-2
17	.427,-3	-.665,-3	-.306,-4	.938,-3	-.585,-3	-.387,-3	-.445,-3	.193,-4	-.104,-3	.748,-3
18	.322,-3	-.369,-3	-.140,-3	.946,-3	-.119,-2	-.343,-3	.440,-4	-.201,-3	-.235,-3	.130,-3
19	.907,-4	-.372,-3	-.251,-3	.109,-2	-.978,-3	-.105,-2	.557,-3	-.865,-3	-.283,-3	.319,-3
20	.486,-4	-.206,-3	-.917,-3	.808,-3	-.425,-3	-.447,-3	.238,-3	-.127,-2	-.611,-3	-.268,-3
21	-.607,-4	.251,-3	-.917,-3	-.422,-3	-.691,-3	.506,-3	-.393,-3	-.309,-3	-.201,-3	-.762,-3
22	-.186,-3	.530,-3	-.602,-3	-.140,-2	-.444,-3	-.857,-4	-.113,-2	.284,-3	.357,-4	-.926,-3
23	-.343,-3	.270,-3	-.695,-3	-.750,-3	.280,-5	.442,-4	-.140,-2	-.625,-3	.337,-3	-.466,-3
24	-.262,-3	-.334,-3	-.670,-3	-.263,-3	.669,-4	.487,-3	-.626,-3	-.644,-3	-.146,-3	.433,-4
25	.999,-4	-.105,-2	-.472,-3	-.244,-4	.310,-3	.235,-4	-.117,-3	-.652,-3	.151,-3	.618,-4
26	.101,-3	.671,-4	-.107,-2	-.288,-3	.644,-3	-.399,-3	.149,-3	.454,-3	.491,-3	.276,-3
27	-.572,-4	.489,-3	-.109,-2	-.981,-3	.554,-3	-.791,-3	-.311,-3	.558,-3	.674,-3	.512,-3
28	-.864,-4	-.294,-3	-.551,-3	-.983,-3	-.145,-3	-.682,-3	-.423,-4	.192,-3	.208,-3	-.328,-3
29	.969,-4	-.945,-4	-.299,-3	-.230,-3	.256,-3	-.656,-3	.652,-3	.271,-3	-.540,-3	-.222,-3
30	.155,-3	-.153,-4	-.926,-4	.247,-3	.643,-3	-.702,-3	-.177,-3	-.124,-3	-.615,-3	.478,-3
31	-.166,-3	.307,-3	-.230,-3	.775,-4	.719,-3	-.472,-3	-.960,-3	.982,-4	-.146,-3	.394,-3
32	.145,-3	.690,-3	-.489,-3	-.458,-4	.966,-4	-.804,-3	.109,-3	-.308,-3	-.259,-3	-.426,-3
33	.246,-3	.101,-2	-.157,-3	.508,-3	-.720,-3	-.913,-3	-.155,-3	-.869,-3	-.737,-3	-.494,-3
34	-.191,-3	-.317,-4	.484,-4	.315,-3	-.112,-2	-.240,-3	-.524,-3	-.132,-2	-.805,-3	.415,-3
35	-.147,-3	-.533,-3	.480,-3	-.298,-4	-.112,-2	.492,-3	-.343,-3	-.394,-3	-.220,-3	.859,-3
36	.273,-3	-.141,-3	.502,-3	-.499,-3	-.769,-5	.016,-4	-.402,-3	-.322,-3	.273,-3	.820,-3
37	.312,-3	.925,-4	.428,-4	.247,-3	.662,-4	-.862,-3	-.251,-3	-.105,-2	.187,-3	.127,-2
38	.332,-3	.369,-3	.176,-3	.343,-3	.372,-3	-.774,-3	-.630,-3	-.541,-3	-.173,-3	.974,-3
39	.359,-3	.502,-3	.405,-3	-.789,-4	-.132,-3	-.382,-3	-.381,-3	-.223,-3	-.228,-3	.452,-3
40	.375,-3	.289,-3	.477,-3	-.334,-3	-.206,-3	-.444,-3	-.502,-3	.267,-3	.186,-4	.955,-4
41	.363,-3	.349,-3	.175,-3	-.550,-4	-.389,-3	-.683,-3	-.477,-3	.523,-3	.115,-3	-.285,-3
42	.240,-3	.702,-4	-.275,-3	.474,-3	-.490,-3	.320,-5	-.282,-3	-.211,-3	.195,-4	-.552,-3
43	.399,-3	-.249,-3	.408,-3	.619,-3	-.287,-3	.806,-3	.109,-3	-.473,-3	.272,-3	-.679,-3
44	.546,-3	.369,-4	.677,-3	-.264,-3	-.394,-3	.692,-3	.913,-3	-.597,-3	-.266,-3	-.615,-3
45	.107,-3	.622,-3	.390,-3	-.137,-2	-.442,-3	.310,-3	.677,-3	-.119,-2	-.918,-3	-.370,-3
46	-.209,-3	.549,-3	.238,-3	-.102,-2	-.894,-3	-.144,-3	.109,-2	.501,-4	-.700,-3	-.180,-3
47	.232,-3	.574,-4	.560,-3	-.337,-3	-.791,-3	-.637,-3	.148,-2	.445,-3	-.725,-4	.200,-3
48	.365,-3	.234,-3	.361,-3	-.103,-3	-.398,-3	-.677,-3	.122,-3	-.648,-3	.248,-3	.871,-3
49	.127,-3	.410,-3	.265,-3	-.553,-3	-.192,-3	.190,-4	-.731,-3	-.639,-3	.646,-3	.370,-3
50	.412,-3	.556,-4	.425,-3	-.518,-3	-.435,-3	.383,-3	-.742,-3	-.776,-3	-.108,-3	-.286,-3
51	.617,-3	-.448,-3	.593,-4	-.654,-3	-.520,-3	.331,-3	-.128,-2	-.775,-3	-.230,-3	-.525,-3
52	.549,-3	-.431,-3	-.515,-3	-.141,-4	.915,-4	.283,-3	-.887,-3	-.130,-3	.899,-3	-.435,-3
53	.441,-3	-.306,-3	-.335,-3	.750,-3	.272,-3	.115,-3	.573,-4	.541,-3	.373,-3	-.335,-3
54	.272,-3	-.566,-3	.541,-3	.193,-3	.225,-3	.131,-3	.920,-4	.531,-3	.243,-3	.739,-4
55	-.959,-4	-.325,-3	.607,-3	-.494,-3	.330,-3	-.774,-4	.990,-3	.209,-3	.730,-4	-.372,-3
56	-.222,-3	-.330,-3	.713,-4	.172,-3	.259,-3	-.265,-3	.884,-3	.385,-3	.145,-3	-.211,-3
57	.109,-4	-.403,-3	-.103,-3	.330,-3	-.107,-3	-.106,-3	.600,-3	.587,-3	.752,-3	.552,-3
58	-.212,-4	-.731,-3	.471,-3	.308,-3	-.154,-3	.307,-3	.224,-3	.363,-3	.215,-3	.609,-3
59	-.246,-3	-.570,-3	.826,-3	.508,-4	.638,-4	.229,-3	-.292,-3	.390,-3	-.318,-3	-.158,-3
60	.000	.000	.000	.000	.000	.000	.000	.000	.000	.000

Run No. 62 ; u component

Separation Distance (m.)

N	1	4	5	16	20	21	64	80	84	85
00	.000	.000	.000	.000	.000	.000	.000	.000	.000	.000
01	.366,-2	-.167,-1	-.145,-1	.229,-1	-.271,-1	-.241,-1	-.007,-2	.215,-1	-.112,-1	-.932,-2
02	.447,-2	-.216,-1	-.183,-1	.343,-1	-.116,-1	-.108,-1	.127,-1	.199,-1	.570,-2	.601,-2
03	.825,-2	-.116,-1	-.827,-2	.207,-1	.696,-2	.134,-1	.156,-1	.111,-1	.571,-2	.425,-2
04	.105,-1	-.897,-2	-.902,-2	.136,-2	.770,-2	.171,-1	.144,-1	.135,-1	.393,-2	.443,-2
05	.770,-2	-.935,-2	-.944,-2	-.143,-3	.625,-3	.407,-2	.100,-1	.717,-2	.301,-3	.343,-2
06	.468,-2	-.336,-2	-.475,-2	.170,-2	-.514,-2	-.638,-2	.136,-1	-.532,-2	.733,-3	-.152,-2
07	.145,-2	-.445,-2	-.611,-2	.744,-2	-.412,-2	-.526,-2	.398,-2	-.374,-3	.182,-2	-.111,-3
08	.402,-5	-.545,-2	-.755,-2	.666,-2	-.862,-3	-.994,-3	-.519,-2	.342,-2	-.328,-2	.727,-3
09	.996,-4	-.755,-3	-.281,-2	.203,-2	-.414,-3	.759,-3	-.223,-2	.291,-2	-.302,-2	.723,-4
10	.476,-3	.283,-3	-.156,-2	.236,-3	-.484,-3	.648,-3	.463,-2	-.318,-3	.141,-2	-.911,-3
11	.258,-2	-.875,-3	-.210,-2	.321 -2	.120,-2	.186,-2	.429,-2	-.638,-3	-.222,-2	-.613,-2
12	.512,-2	-.600,-3	-.284,-2	.676,-3	.457,-3	.157,-2	.256,-2	.249,-2	-.486,-2	-.884,-2
13	.162,-2	-.905,-2	-.537,-2	-.216,-2	-.879,-4	.195,-2	.554,-3	.104,-2	-.312,-2	-.662,-2
14	.106,-2	-.607,-3	-.574,-2	-.160,-2	.303,-3	.227,-2	.132,-2	-.224,-3	.105,-2	.119,-2
15	.598,-3	.673,-3	-.162,-2	.720,-3	.713,-3	.181,-2	-.105,-3	-.736,-4	.102,-2	.277,-2
16	.376,-3	.990,-3	.471,-3	.416,-3	-.116,-2	-.432,-3	-.441,-3	-.162,-3	-.871,-4	.112,-2
17	.607,-3	.956,-3	.521,-3	.307,-3	-.123,-2	-.152,-3	-.372,-3	-.738,-3	.454,-3	.473,-3
18	.103,-2	.150,-2	.113,-2	.176,-2	-.179,-3	-.105,-3	-.412,-3	-.163,-2	.807,-3	.413,-3
19	.191,-2	.116,-2	.125,-2	.168,-2	.778,-3	.400,-3	-.665,-3	-.415,-4	-.948,-4	-.115,-2
20	.221,-2	.281,-3	.748,-3	.456,-3	-.148,-3	.518,-3	-.791,-3	.175,-3	-.451,-3	-.123,-2
21	.171,-2	-.441,-4	.533,-3	.350,-3	-.107,-2	-.481,-3	-.472,-3	-.358,-3	-.713,-3	-.382,-3
22	.167,-2	.506,-3	.568,-3	-.113,-3	-.183,-2	-.166,-2	.124,-2	-.167 -3	-.235,-3	.669,-3
23	.102,-2	.733,-3	.348,-3	-.550,-3	-.157,-2	-.105,-2	.369,-3	-.127,-3	-.636,-3	-.408,-3
24	.711,-3	.631,-3	.209,-3	-.626,-3	-.134,-2	-.633,-4	-.340,-3	.877,-3	-.619,-3	-.669,-3
25	.685,-3	.113,-2	.573,-3	.264,-4	-.302,-3	.376,-3	-.496,-3	.246,-2	.338,-3	.336,-3
26	.657,-4	.740,-3	.293,-3	.588,-4	.617,-3	.791,-3	.833,-3	.192,-2	-.215,-3	-.177,-3
27	-.142,-4	-.251,-3	-.303,-3	.168,-3	.987,-3	.883,-3	.602,-3	.625,-3	-.853,-3	-.106,-2
28	.468,-3	.470,-3	.104,-3	-.396,-3	.101,-2	.679,-3	.121,-3	-.274,-3	-.217,-3	-.627,-3
29	.638,-3	-.221,-3	-.366,-4	-.699,-3	.105,-2	.108,-2	-.773,-3	.100,-3	-.457,-3	-.605,-3
30	.692,-3	-.540,-3	-.244,-3	-.546,-3	.927,-3	.108,-2	-.540,-3	.740,-3	-.893,-3	.358,-4
31	.120,-2	-.664,-3	-.645,-4	-.111,-3	.380,-3	.582,-3	-.605,-3	.657,-3	-.628,-3	.133,-3
32	.177,-2	-.461,-3	.132,-3	-.120,-3	-.457,-3	-.173,-3	-.514,-3	.849,-3	-.270,-3	.460,-3
33	.151,-2	-.901,-3	-.277,-3	.252,-3	-.105,-3	.286,-4	-.150,-3	.523,-3	-.301,-3	-.469,-3
34	.800,-3	-.472,-3	-.901,-4	.977,-4	-.323,-3	-.120,-3	.180,-3	.151,-3	.236,-3	-.666,-3
35	.103,-3	-.315,-3	-.516,-4	.120,-3	-.479,-3	-.437,-3	-.152,-3	.207,-3	.551,-3	-.284,-3
36	.105,-3	-.346,-3	-.157,-3	-.107,-3	-.403,-3	-.268,-3	.305,-3	-.108,-4	.619,-3	.382,-3
37	.457,-3	-.396,-3	-.506,-4	-.200,-3	-.365,-3	.252,-3	.498,-4	-.157,-3	-.211,-3	.112,-3
38	-.944,-5	.904,-4	.723,-3	.473,-4	-.295,-3	.355,-3	-.135,-4	-.369,-3	-.355,-3	-.883,-4
39	-.775,-4	.224,-3	.263,-3	.308,-3	.649,-4	.544,-3	.142,-3	-.393,-3	-.312,-3	-.848,-4
40	.604,-3	.502,-3	.105,-3	.386,-3	.983,-3	.662,-3	.258,-3	-.114,-3	-.299,-3	-.221,-3
41	.826,-3	-.123,-3	-.415,-3	.435,-3	.833,-3	.300,-3	.391,-3	-.487,-3	-.524,-3	-.737,-3
42	.470,-3	-.303,-3	-.666,-4	.504,-4	-.145,-3	-.138,-3	.223,-3	-.472,-3	.415,-4	-.374,-3
43	.136,-3	.804,-4	.175,-3	-.283,-3	-.229,-3	-.104,-3	-.854,-4	-.156,-3	.476,-3	.380,-3
44	.534,-3	-.421,-4	.321,-3	-.102,-3	.156,-4	.276,-4	.163,-3	.816,-4	.274,-3	.568,-3
45	.527,-3	-.357,-3	-.120,-3	.244,-3	-.252,-3	.402,-3	-.434,-4	.167,-3	.111,-3	.176,-3
46	.247,-3	.212,-4	-.436,-3	-.137,-3	-.390,-3	.180,-3	.118,-3	-.150,-3	.219,-3	.760,-4
47	.414,-3	.329,-3	-.334,-3	-.335,-3	-.408,-3	-.250,-3	-.616,-4	-.434,-3	.142,-3	-.603,-4
48	.651,-3	.218,-3	-.205,-3	.746,-4	-.350,-3	.124,-3	.203,-3	-.149,-3	.917,-4	.400,-4
49	.661,-3	-.361,-4	-.378,-3	.274,-3	-.238,-3	.545,-3	-.148,-4	.161,-4	.156,-3	.309,-3
50	.457,-3	-.103,-3	.503,-4	.176,-3	-.200,-3	.173,-3	-.201,-3	.144,-3	.307,-3	.457,-3
51	.913,-4	-.123,-3	.330,-3	.116,-3	.104,-3	.645,-4	-.148,-3	.208,-4	.588,-4	.395 -3
52	-.153,-4	-.142,-3	.402,-3	.434,-3	.77 ,-5	-.407,-5	-.512,-4	-.567,-4	-.101,-3	.807,-4
53	-.396,-4	-.374,-4	.612,-3	.816,-3	.477,-4	-.271,-4	-.513,-3	.167,-3	.239,-3	.121,-3
54	-.2[illegible]-3	-.113,-3	.139,-3	.458,-3	.227,-3	.001,-4	-.459,-3	.574,-3	.400,-3	.190,-3
55	-.311,-3	-.173,-3	-.162,-3	.214,-4	.113,-4	.035,-5	-.132,-3	.5 4,-3	.943,-4	.693,-4
56	-.387,-4	-.400,-3	-.357,-3	-.252,-3	.567,-4	.400,-3	-.145,-3	.185,-3	-.966,-4	.167,-3
57	.111,-3	-.601,-3	-.576,-3	-.254,-3	.106,-3	.21[illegible]-3	-.256,-3	-.102,-3	-.131,-3	.143,-3
58	.391,-4	-.242,-3	-.301,-3	-.121,-3	.104,-3	.456,-3	-.251,-3	.102,-3	-.140,-3	-.319,-4
59	.131,-3	-.312,-4	-.255,-3	-.272,-3	.261,-3	.362,-3	-.201,-3	-.115,-3	-.164,-3	-.361,-3
60	.000	.000	.000	.000	.000	.000	.000	.000	.000	.000

Run No. 62 ; v component

Separation Distance (m.)

N	1	4	5	16	20	21	64	80	84	85
00	.000	.000	.000	.000	.000	.000	.000	.000	.000	.000
01	-.352,-2	-.100,-1	-.124,-1	-.132,-1	-.203,-1	-.238,-1	.564,-2	-.303,-2	-.214,-1	-.137,-1
02	-.284,-2	-.290,-2	-.514,-2	-.323,-2	-.303,-2	-.521,-2	.134,-1	-.599,-2	-.110,-1	-.986,-2
03	.710,-3	.485,-2	.542,-2	.300,-2	.635,-2	.587,-2	.578,-2	-.424,-2	-.726,-2	-.722,-2
04	.295,-2	.475,-2	.603,-2	-.825,-3	.472,-2	.589,-2	.094,-3	-.148,-2	-.320,-2	-.137,-2
05	.291,-2	.933,-3	.175,-2	-.295,-2	.166,-2	.272,-2	.351,-2	-.115,-2	-.103,-2	-.612,-3
06	.197,-2	-.507,-4	.136,-2	.166,-3	.166,-2	.307,-2	.209,-2	-.107,-2	.197,-3	-.198,-2
07	.215,-2	.698,-3	.399,-2	-.285,-2	-.200,-2	.556,-3	-.733,-3	-.177,-2	-.101,-2	-.340,-2
08	.377,-2	.100,-2	.469,-2	-.424,-2	-.327,-2	-.103,-2	-.250,-4	-.211,-2	-.741,-3	-.212,-2
09	.334,-2	.130,-2	.334,-2	.198,-3	-.241,-2	-.232,-2	.605,-4	-.200,-2	.130,-2	.772,-3
10	.164,-2	.196,-2	.308,-2	.304,-2	-.155,-2	-.20 ,-2	-.501,-3	-.380,-3	.215,-2	.175,-2
11	-.242,-3	.126,-2	.169,-2	.503,-3	-.997,-3	-.421,-3	-.236,-2	.221,-3	.951,-3	.141,-2
12	.267,-4	.816,-3	.108,-2	-.361,-2	-.193,-2	-.212,-2	-.275,-2	.367,-3	.693,-3	.142,-2
13	.375,-3	.436,-3	.425,-3	-.330,-2	-.152,-2	-.313,-2	-.152,-2	-.470,-3	.193,-3	.696,-3
14	.160,-2	.859,-3	-.902,-4	.790,-3	.143,-2	-.470,-3	-.119,-2	-.644,-3	-.957,-3	-.418,-3
15	.132,-2	.243,-2	.488,-3	.265,-2	.206,-2	.915,-3	-.117,-4	-.516,-3	-.114,-2	-.114,-2
16	.647,-3	.142,-2	.963,-3	.255,-2	.154,-2	.977,-3	.143,-2	-.105,-3	-.237,-3	-.118,-2
17	.820,-3	.149,-3	.109,-2	.159,-2	.115,-2	.714,-3	.147,-2	.210,-3	-.695,-3	-.773,-3
18	.850,-3	-.456,-3	.165,-3	.126,-2	.998,-3	.114,-2	.727,-3	.410,-3	-.286,-3	-.517,-3
19	-.301,-4	.417,-3	-.763,-3	.515,-3	.913,-4	.461,-3	.666,-3	-.430,-3	-.923,-3	-.918,-3
20	-.615,-3	.122,-2	-.911,-3	-.362,-3	-.437,-3	-.736,-3	.901,-3	-.217,-2	-.643,-3	-.871,-3
21	-.470,-3	.798,-3	-.328,-3	-.104,-2	-.225,-3	-.556,-3	.238,-3	-.147,-2	.830,-3	.241,-3
22	.270,-3	.933,-3	.356,-3	-.330,-3	.309,-4	-.292,-3	-.566,-4	.320,-3	.228,-3	.105,-2
23	.110,-2	.302,-3	.965,-3	-.855,-3	-.192,-3	.767,-4	-.308,-3	-.758,-3	-.957,-3	.969,-3
24	.496,-3	-.491,-3	.168,-3	-.133,-2	-.430,-3	-.516,-4	.130,-3	-.149,-2	-.618,-3	.365,-3
25	-.477,-4	-.650,-3	-.428,-3	.223,-3	.468,-4	-.953,-4	.922,-3	-.337,-3	-.476,-3	-.413,-3
26	-.275,-4	-.936,-4	-.547,-3	.109,-2	.305,-3	-.264,-4	.653,-3	.947,-3	-.236,-3	-.658,-4
27	.902,-4	-.335,-3	-.997,-3	-.928,-4	-.948,-4	-.329,-3	-.417,-3	-.252,-3	-.242,-3	.151,-3
28	.496,-3	.149,-3	-.936,-3	-.181,-3	.873,-4	.127,-4	-.119,-2	-.112,-2	.339,-3	.116,-3
29	.538,-3	.171,-2	-.403,-3	-.516,-3	-.578,-3	.157,-3	-.734,-3	-.772,-3	.924,-3	.328,-3
30	.766,-3	.257,-2	.753,-3	-.118,-2	-.155,-3	-.862,-4	-.394,-3	-.774,-3	-.211,-3	-.378,-4
31	.735,-3	.162,-2	.120,-2	-.820,-3	.230,-3	-.836,-3	-.498,-3	-.554,-3	-.620,-3	-.217,-3
32	.105,-2	.142,-2	.109,-2	-.651,-3	.253,-3	-.339,-3	-.337,-4	-.395,-3	-.823,-4	-.247,-3
33	.100,-2	.254,-2	.121,-2	-.120,-2	-.449,-3	-.277,-4	.627,-3	-.689,-3	.115,-3	.137,-3
34	.670,-3	.219,-2	.638,-3	-.355,-3	-.611,-3	-.632,-4	.502,-3	-.567,-3	.413,-3	.400,-3
35	.763,-4	.349,-3	.871,-4	.531,-3	-.662,-4	-.275,-5	-.271,-4	.139,-3	.710,-3	.553,-3
36	-.383,-3	-.445,-3	-.249,-3	.355,-3	-.234,-3	-.495,-3	-.205,-3	-.328,-4	.785,-3	.105,-2
37	-.258,-3	-.351,-3	-.302,-3	.000,-3	-.265,-3	-.561,-3	-.685,-3	-.458,-3	.325,-3	.917,-3
38	-.439,-4	-.239,-3	-.403,-3	.793,-3	.648,-5	-.625,-4	-.184,-3	.175,-3	.702,-4	.685,-4
39	.317,-3	-.184,-3	.999,-4	.738,-3	.370,-3	-.650,-4	.512,-3	.106,-2	.250,-3	-.415,-3
40	.474,-3	-.619,-4	-.311,-3	.102,-2	.413,-3	-.164,-3	-.879,-4	.152,-3	.624,-3	-.540,-3
41	.426,-3	.315,-3	-.737,-3	.422,-3	-.354,-4	-.455,-3	-.706,-3	-.150,-3	.339,-4	-.794,-3
42	.396,-3	.202,-3	-.182,-3	-.234,-3	-.846,-3	-.317,-3	-.412,-3	.155,-3	-.135,-3	-.253,-3
43	.234,-3	.286,-3	.208,-3	.345,-5	-.101,-2	-.226,-3	-.826,-4	.233,-3	.671,-3	.127,-3
44	.967,-4	-.464,-4	.336,-3	-.450,-4	-.519,-3	.104,-3	.331,-3	.230,-3	.353,-3	.199,-3
45	.156,-3	-.232,-3	.161,-3	-.803,-4	-.529,-3	-.481,-4	.565,-3	.106,-4	-.813,-4	.159,-3
46	.307,-3	-.361,-3	-.581,-3	.138,-3	-.248,-3	-.653,-4	.337,-3	-.219,-3	-.392,-3	-.569,-4
47	-.163,-3	-.192,-3	-.549,-3	-.349,-3	-.122,-3	.458,-4	.499,-5	-.809,-3	-.101,-2	-.512,-3
48	-.604,-3	.523,-3	.171,-4	-.397,-3	-.409,-3	-.732,-4	-.264,-3	-.250,-3	-.928,-3	-.607,-3
49	-.759,-3	.582,-3	.185,-3	-.156,-3	-.700,-3	-.765,-5	-.687,-3	.269,-3	-.527,-3	-.483,-3
50	-.314,-3	.273,-5	-.142,-3	.233,-3	-.102,-3	.274,-3	-.877,-3	-.611,-4	-.141,-3	-.113,-3
51	.585,-4	-.356,-4	-.509,-3	.919,-3	.624,-3	.258,-3	-.653,-3	-.424,-3	.260,-3	-.378,-3
52	.426,-4	-.275,-3	-.542,-3	.515,-3	.297,-3	.616,-3	-.304,-3	.247,-3	.410,-3	-.195,-3
53	-.883,-4	-.532,-3	.843,-4	.529,-4	-.357,-3	.547,-3	.220,-3	-.597,-4	-.217,-3	.142,-3
54	-.318,-3	.296,-3	.248,-3	.291,-3	-.713,-3	.203,-3	.215,-3	-.368,-3	.261,-4	.134,-4
55	-.169,-4	.635,-3	.127,-3	.553,-5	-.188,-3	.537,-3	.406,-4	.993,-4	.648,-3	.667,-4
56	.233,-3	.291,-3	-.426,-3	.343,-3	.373,-3	.502,-3	-.147,-3	.209,-3	.796,-3	.408,-3
57	.264,-4	-.160,-3	-.655,-3	.358,-5	.271,-3	.686,-4	-.535,-4	-.532,-4	.209,-3	.528,-3
58	.266,-3	.981,-7	-.239,-3	-.222,-3	-.165,-3	-.183,-3	-.551,-4	.804,-4	.341,-5	.491,-3
59	.290,-3	-.173,-3	-.481,-4	-.541,-3	-.195,-3	-.203,-3	.330,-3	.128,-4	.137,-3	.263,-3
60	.000	.000	.000	.000	.000	.000	.000	.000	.000	.000

Run No. 65 ; u component

	Separation Distance (m.)									
N	6	12	18	24	36	42	48	72	84	90
00	.000	.000	.000					.000	.000	.000
01	.302,-2	.113,-1	.158,-1					.148,-1	.644,-2	.742,-2
02	.837,-2	.787,-2	.139,-1					.156,-1	.794,-2	.940,-2
03	.132,-1	.798,-2	.119,-1					.935,-2	.409,-2	.209,-2
04	.140,-1	.109,-1	.126,-1					-.506,-2	-.641,-2	-.692,-2
05	.134,-1	.118,-1	.128,-1					-.682,-2	.537,-3	.279,-2
06	.152,-1	.102,-1	.117,-1					-.551,-2	.840,-2	.970,-2
07	.124,-1	.922,-2	.905,-2					-.442,-2	.408,-2	.651,-2
08	.123,-1	.102,-1	.656,-2					-.398,-2	.181,-2	.466,-2
09	.103,-1	.735,-2	.174,-2					-.115,-2	.254,-2	.422,-2
10	.699,-2	.546,-2	-.203,-2					-.176,-2	.809,-3	-.799,-3
11	.484,-2	.428,-2	-.268,-3					-.376,-2	.305,-2	-.122,-2
12	.434,-2	.323,-2	.642,-3					-.263,-2	.322,-2	.181,-2
13	.406,-2	.290,-2	.151,-2					-.655,-3	.166,-2	.233,-2
14	.235,-2	.256,-2	.345,-3					-.986,-3	-.129,-2	.135,-2
15	.242,-2	.215,-2	-.524,-3					-.488,-3	-.108,-2	.969,-3
16	.457,-2	.225,-2	-.190,-2					-.102,-2	.108,-2	.118,-2
17	.378,-2	.212,-2	-.199,-2					-.940,-3	.181,-2	.149,-2
18	.335,-2	.128,-2	-.115,-2					-.159,-2	.111,-2	.173,-3
19	.376,-2	.122,-2	-.108,-2					-.180,-2	.192,-2	-.204,-3
20	.394,-2	.913,-3	-.595,-3					-.995,-3	.216,-2	-.166,-2
21	.257,-2	.681,-3	.401,-5					-.572,-4	.165,-2	-.586,-3
22	.244,-2	.629,-3	-.515,-4					-.221,-3	.631,-3	-.287,-3
23	.282,-2	.629,-3	.524,-4					.233,-3	.490,-3	-.384,-3
24	.248,-2	.447,-3	-.190,-3					.374,-4	-.574,-3	-.559,-3
25	.152,-2	.440,-3	-.302,-3					.219,-3	-.105,-2	-.361,-3
26	.104,-2	.478,-4	-.251,-3					-.414,-3	-.457,-3	-.128,-2
27	.734,-3	-.132,-3	-.327,-3					-.210,-3	.112,-3	-.110,-2
28	.556,-3	-.313,-3	-.631,-3					.975,-4	-.70[illegible],-4	.269,-3
29	.508,-3	-.709,-3	-.494,-3					-.330,-3	-.175,-3	.467,-3
30	.377,-3	-.568,-3	-.112,-3					-.537,-3	-.714,-3	.469,-3
31	.354,-3	-.219,-3	.128,-3					.952,-4	-.664,-3	.634,-3
32	.917,-3	.191,-3	-.365,-4					-.152,-3	-.549,-3	-.294,-3
33	.796,-3	.513,-3	.126,-3					-.992,-4	-.243,-3	-.791,-3
34	.255,-3	.449,-4	.487,-4					.102,-3	-.718,-3	-.906,-4
35	-.164,-3	-.415,-3	-.351,-4					.490,-3	-.288,-3	.405,-3
36	-.327,-3	-.476,-3	-.140,-3					.256,-3	.150,-3	-.244,-3
37	-.466,-3	-.226,-3	-.113,-3					-.869,-4	-.215,-3	-.176,-3
38	-.524,-3	.946,-4	-.166,-3					-.852,-4	-.212,-3	.938,-4
39	-.329,-3	.161,-3	-.140,-3					.120,-3	-.123,-3	.460,-3
40	.515,-4	-.348,-3	.293,-3					.834,-4	-.611,-3	.438,-3
41	-.160,-3	-.151,-3	.175,-3					.176,-3	-.412,-3	.561,-3
42	-.218,-3	-.749,-4	-.122,-6					-.105,-3	.458,-4	.485,-3
43	.213,-3	-.201,-3	.221,-3					-.878,-4	.818,-4	.387,-3
44	.169,-3	.751,-5	.893,-4					-.716,-5	.189,-3	.233,-3
45	-.175,-5	.352,-3	.571,-4					-.750,-4	.901,-4	.221,-3
46	.202,-4	.185,-3	.172,-3					-.165,-3	-.132,-3	-.111,-3
47	-.139,-4	-.974,-4	.206,-3					-.382,-4	.168,-3	-.258,-3
48	.690,-4	-.951,-4	.205,-3					-.130,-3	.127,-3	-.313,-3
49	-.523,-4	-.427,-4	.233,-5					-.802,-4	-.135,-3	-.917,-4
50	-.390,-4	-.115,-3	-.789,-4					.177,-3	-.308,-3	.597,-4
51	-.255,-4	.570,-4	.137,-3					.380,-3	-.224,-3	.260,-3
52	.225,-3	.377,-4	-.189,-3					.116,-3	-.175,-3	.226,-3
53	.211,-3	-.101,-3	-.177,-3					-.541,-4	-.315,-3	.131,-3
54	-.502,-4	-.113,-3	.130,-3					-.233,-4	-.309,-3	.816,-4
55	-.574,-4	.426,-5	.126,-3					-.105,-3	-.178,-3	.253,-3
56	-.662,-4	.174,-3	-.213,-4					.793,-5	-.651,-4	.957,-4
57	-.164,-3	-.368,-5	-.709,-4					.106,-3	-.124,-3	.515,-4
58	-.285,-3	-.207,-3	-.617,-4					-.826,-4	-.244,-3	-.151,-4
59	-.361,-3	.484,-4	-.106,-3					-.261,-3	.635,-4	-.213,-3
60	.000	.000	.000					.000	.000	.000

Run No. 65 ; v component

N	Separation Distance (m.) 0	12	18	24	36	42	48	72	84	90
00	.000	.000	.000					.000	.000	.000
01	.183,-2	.121,-2	.975,-3					.455,-2	.367,-2	.359,-2
02	.207,-2	.418,-3	.282,-3					.601,-3	-.191,-2	-.137,-2
03	-.367,-5	-.101,-4	.230,-2					-.454,-2	-.359,-2	-.304,-2
04	.878,-3	.231,-3	.466,-2					-.250,-2	-.156,-2	-.117,-2
05	.417,-2	.199,-2	.685,-2					.341,-3	.286,-3	.512,-3
06	.582,-2	.159,-2	.822,-2					.105,-2	-.919,-4	.906,-3
07	.585,-2	.100,-2	.568,-2					.700,-3	-.465,-3	.217,-3
08	.320,-2	.249,-2	.123,-2					.578,-3	-.184,-2	-.224,-2
09	.355,-2	.546,-2	.515,-2					.128,-3	-.217,-2	-.143,-2
10	.506,-2	.590,-2	.632,-2					.612,-3	-.216,-3	.852,-3
11	.407,-2	.450,-2	.433,-2					-.164,-2	.489,-3	-.684,-3
12	.304,-2	.350,-2	.179,-2					-.376,-2	.468,-3	-.143,-2
13	.219,-2	.255,-2	.479,-3					-.101,-2	.915,-3	-.152,-2
14	.851,-2	.134,-2	.642,-3					.487,-3	.294,-3	.410,-3
15	.476,-2	.109,-2	.102,-2					.494,-3	.141,-2	.421,-3
16	.528,-2	.191,-2	.284,-3					-.918,-3	.480,-3	.478,-3
17	.511,-2	.317,-2	-.756,-3					-.314,-2	-.927,-3	.172,-2
18	.249,-2	.315,-2	-.101,-2					-.448,-2	.712,-3	.361,-3
19	.206,-2	.297,-2	.254,-3					-.151,-2	.131,-2	-.175,-2
20	.354,-2	.340,-2	.920,-3					-.100,-2	.637,-3	-.242,-2
21	.278,-2	.324,-2	-.864,-3					-.258,-2	.666,-3	-.770,-3
22	.205,-2	.162,-2	-.101,-2					-.216,-2	-.287,-4	.166,-2
23	.127,-2	.928,-3	-.718,-5					-.230,-3	-.490,-3	.205,-2
24	.207,-3	.121,-2	-.610,-3					.428,-3	.569,-4	.425,-3
25	.700,-3	.151,-2	-.209,-2					-.256,-3	-.595,-3	.109,-2
26	.110,-2	.125,-2	-.215,-2					-.366,-3	-.687,-3	.124,-2
27	.118,-2	.997,-3	-.195,-2					-.239,-3	-.850,-3	.128,-2
28	.131,-2	.563,-3	-.145,-2					-.433,-3	-.715,-3	.153,-2
29	.170,-2	.232,-3	-.292,-3					-.325,-3	-.580,-4	.141,-3
30	.116,-2	-.254,-5	-.395,-3					-.866,-4	-.261,-3	-.760,-3
31	.279,-3	.975,-4	.983,-4					.306,-3	-.226,-3	-.932,-3
32	-.275,-3	.644,-3	.254,-3					-.230,-4	.335,-3	-.196,-3
33	-.785,-3	.398,-3	-.234,-3					-.309,-3	.301,-3	.324,-3
34	-.513,-3	-.540,-3	-.143,-3					-.695,-3	.283,-3	.356,-3
35	.223,-3	-.568,-3	-.627,-3					-.160,-3	.324,-3	.594,-4
36	.383,-3	.147,-3	-.807,-3					.760,-3	.244,-3	-.232,-3
37	-.185,-3	.162,-3	-.542,-3					.436,-3	.283,-3	-.404,-3
38	-.346,-3	-.878,-3	.212,-3					-.485,-3	.631,-4	.171,-3
39	-.676,-3	-.775,-3	-.534,-4					-.578,-3	-.851,-4	.600,-3
40	-.991,-3	-.224,-3	-.389,-3					.178,-4	.338,-5	.343,-3
41	-.710,-3	-.415,-3	-.183,-3					-.333,-3	-.438,-3	.474,-3
42	-.424,-3	-.266,-3	-.768,-4					-.685,-3	-.628,-3	.336,-3
43	-.102,-3	.165,-3	-.244,-3					-.335,-3	-.187,-3	-.208,-3
44	.142,-3	-.415,-3	-.254,-3					-.445,-4	-.100,-3	-.545,-4
45	-.192,-3	-.664,-3	-.260,-3					.325,-3	-.167,-3	-.196,-4
46	-.459,-3	-.583,-3	-.968,-5					.858,-4	-.156,-4	-.134,-3
47	-.126,-3	-.370,-3	.400,-3					.549,-4	.151,-3	-.127,-3
48	.499,-3	.171,-3	.498,-3					-.197,-3	.369,-4	-.141,-3
49	.350,-3	.426,-3	.309,-3					-.696,-3	-.210,-3	-.490,-3
50	.719,-4	.172,-3	.324,-3					-.543,-3	.191,-3	-.125,-3
51	.155,-3	.372,-4	.189,-3					-.294,-3	-.256,-4	.438,-3
52	-.368,-4	-.253,-3	-.280,-3					-.381,-3	-.709,-3	.468,-3
53	-.431,-3	-.439,-3	-.503,-3					-.142,-3	-.335,-3	.722,-3
54	-.413,-3	-.246,-3	-.264,-3					-.249,-3	-.322,-3	.105,-2
55	-.338,-3	.165,-5	-.770,-4					-.262,-3	-.565,-3	.224,-3
56	-.655,-3	-.126,-3	-.303,-3					-.132,-3	-.487,-3	-.168,-3
57	-.628,-3	-.136,-3	.138,-4					.398,-3	-.229,-3	.232,-5
58	-.302,-3	-.874,-6	.539,-3					.582,-3	.284,-3	.405,-3
59	.230,-3	.206,-4	.588,-3					.287,-3	.615,-3	.447,-3
60	.000	.000	.000					.000	.000	.000

Run No. 66 ; u component

N	Separation Distance (m.) 6	12	18	24	36	42	48	72	84	90
00	.000	.000	.000	.000	.000	.000	.000	.000	.000	.000
01	.3 6,-2	.774,-4	-.106,-2	-.279,-2	-.362,-2	-.441,-2	.323,-2	.160,-2	-.502,-3	-.131,-2
02	.9,-2	.401,-3	.106,-2	-.359,-2	-.147,-2	-.655,-2	.232,-2	.732,-3	.210,-2	.494,-3
03	.313,-2	-.113,-3	.135,-3	-.398,-3	-.265,-2	-.525,-2	-.700,-3	.582,-3	.214,-2	-.242,-2
04	.504,-2	-.542,-3	-.269,-2	.214,-2	-.273,-2	.106,-2	-.242,-2	-.676,-3	.121,-2	-.376,-2
05	.480,-2	-.839,-3	-.207,-2	-.339,-3	-.893,-3	.263,-2	-.404,-3	-.163,-2	-.625,-3	-.154,-2
06	.440,-2	.279,-3	-.202,-3	-.196,-2	-.669,-3	-.806,-3	.143,-2	-.201,-2	-.331,-3	-.549,-3
07	.313,-2	.581,-3	.580,-3	-.776,-3	-.162,-2	-.167,-2	.676,-3	-.101,-2	-.496,-3	-.396,-3
08	.262,-2	.844,-4	.400,-3	-.292,-3	-.229,-2	.562,-3	-.110,-2	-.150,-2	-.197,-2	.596,-3
09	.266,-2	-.355,-3	.930,-3	-.404,-3	-.202,-2	.132,-2	-.562,-3	-.610,-3	-.168,-2	.234,-2
10	.106,-2	.564,-4	.191,-3	.105,-2	-.534,-3	.137,-2	.428,-4	.108,-3	-.128,-2	.241,-2
11	.388,-3	.533,-3	-.598,-3	.741,-3	.671,-3	.901,-3	-.180,-3	-.632,-3	-.135,-2	.127,-2
12	.955,-3	.139,-3	.105,-3	.196,-3	.766,-3	.505,-3	-.339,-4	-.586,-3	-.874,-3	-.435,-4
13	.943,-3	-.761,-3	-.227,-3	.102,-3	-.423,-3	-.776,-4	.216,-3	-.164,-3	.145,-5	-.110,-2
14	.101,-2	-.422,-3	.244,-3	.160,-2	-.364,-5	-.553,-3	-.701,-3	.622,-4	.926,-3	-.189,-2
15	.986,-3	.239,-4	.800,-3	.253,-2	.950,-3	-.513,-3	-.690,-3	-.810,-4	.717,-3	-.165,-2
16	.332,-3	.647,-4	.360,-3	.141,-2	.812,-3	.362,-3	.472,-4	-.618,-3	-.984,-4	-.114,-2
17	.390,-3	-.678,-4	.331,-3	.374,-3	.381,-3	.147,-4	-.380,-3	-.381,-3	-.520,-3	.298,-3
18	.447,-3	.388,-4	.715,-4	.209,-3	.426,-3	.540,-4	-.346,-3	.115,-3	.540,-5	-.102,-2
19	.181,-3	-.193,-4	-.759,-4	-.862,-4	-.200,-3	.808,-3	.788,-3	.566,-3	.105,-2	.758,-4
20	.109,-3	-.268,-3	.373,-3	-.195,-5	-.776,-3	.118,-2	.748,-3	.400,-4	.519,-3	-.296,-3
21	.182,-3	-.257,-3	.281,-3	-.656,-3	-.344,-3	.509,-3	.272,-3	.876,-4	-.203,-3	-.379,-3
22	.369,-3	.684,-4	-.315,-3	-.126,-2	-.259,-3	-.141,-3	-.255,-3	.245,-3	.654,-4	-.669,-3
23	.336,-3	.315,-3	-.257,-3	-.107,-2	-.518,-3	-.520,-3	-.421,-3	-.393,-3	.400,-4	-.480,-3
24	.118,-4	.603,-3	-.257,-4	-.402,-3	-.317,-3	-.248,-3	.358,-4	-.945,-3	.880,-4	.852,-5
25	-.619,-4	.459,-3	-.264,-3	-.362,-3	.253,-4	.376,-5	.260,-3	-.644,-3	.242,-3	.171,-3
26	-.295,-3	.366,-3	-.258,-3	-.409,-3	.753,-4	.295,-3	.123,-3	-.370,-3	.677,-3	.393,-3
27	-.580,-3	.341,-3	-.288,-3	-.100,-3	.584,-4	.431,-3	-.489,-3	-.901,-4	.927,-3	.293,-3
28	-.414,-3	.298,-3	-.216,-3	.224,-3	.176,-3	.136,-3	-.389,-3	.120,-3	.558,-3	-.159,-3
29	-.182,-3	.403,-3	-.105,-3	.101,-3	.734,-4	-.172,-3	.254,-3	.222,-3	-.191,-3	-.484,-3
30	-.628,-4	.611,-3	-.766,-4	-.177,-4	.556,-4	.177,-4	.345,-3	-.243,-3	-.598,-3	-.187,-3
31	.307,-4	.491,-3	-.845,-4	.771,-4	-.104,-3	.155,-3	.439,-3	-.348,-3	-.474,-3	-.277,-4
32	.123,-3	.757,-4	.334,-4	.186,-3	-.106,-3	.168,-3	.488,-3	.138,-4	-.177,-3	.108,-3
33	.774,-4	-.175,-3	.151,-3	.287,-4	-.609,-4	.176,-3	.312,-3	.881,-4	-.131,-3	.892,-4
34	-.168,-3	-.258,-3	.473,-4	-.127,-3	-.316,-4	.598,-4	.576,-3	-.185,-3	-.778,-4	-.219,-3
35	-.185,-3	-.624,-4	-.625,-4	.947,-4	-.156,-3	.694,-4	.144,-3	-.118,-3	.144,-3	-.223,-3
36	-.408,-4	-.623,-5	-.871,-4	.259,-3	-.192,-3	-.137,-3	-.148,-3	.149,-3	.252,-3	-.182,-4
37	.256,-4	-.279,-4	-.518,-5	.139,-3	-.533,-4	-.197,-3	.929,-4	.822,-4	.131,-3	.414,-4
38	.699,-4	-.703,-5	-.466,-4	-.298,-4	-.113,-3	.379,-5	-.422,-4	.340,-5	-.539,-4	-.290,-4
39	-.210,-4	.508,-4	.148,-4	-.157,-4	-.656,-4	-.295,-4	-.112,-3	.121,-4	-.996,-4	-.194,-3
40	-.300,-4	-.350,-4	-.378,-4	-.610,-4	-.413,-4	-.145,-3	-.107,-3	.659,-5	.313,-3	-.632,-4
41	.654,-4	-.125,-3	-.753,-4	-.981,-5	-.147,-3	-.118,-3	-.142,-3	-.645,-5	.427,-3	.147,-3
42	.611,-4	-.616,-4	.156,-6	.958,-4	-.731,-4	.398,-5	-.138,-3	-.217,-3	.151,-3	.776,-4
43	.727,-4	.257,-4	.870,-4	.906,-4	.107,-3	.211,-3	.250,-3	-.940,-4	.250,-4	-.191,-4
44	.514,-4	-.300,-4	.579,-4	.132,-3	.145,-3	.211,-3	.464,-3	.244,-4	-.840,-4	-.400,-4
45	-.479,-4	-.217,-4	.731,-4	-.350,-4	-.162,-3	.191,-3	.179,-3	-.827,-5	-.181,-3	-.987,-4
46	-.925,-4	-.315,-4	.699,-4	-.130,-3	-.149,-3	-.296,-4	-.110,-3	.135,-3	-.160,-3	-.127,-4
47	-.665,-4	-.731,-4	.301,-4	-.129,-3	.542,-4	-.246,-3	-.152,-3	.551,-4	.475,-5	.150,-3
48	.425,-4	.112,-4	-.660,-5	-.124,-3	.825,-4	-.236,-3	.334,-4	-.115,-3	.259,-4	.122,-3
49	.128,-4	.354,-4	.267,-4	-.311,-4	.781,-4	-.879,-4	.208,-3	-.220,-3	-.145,-3	.117,-3
50	.204,-4	.140,-3	-.411,-4	.379,-3	.532,-4	.235,-3	.104,-3	-.849,-4	-.928,-4	.314,-3
51	.408,-4	.148,-3	-.384,-4	.407,-3	.315,-4	.238,-3	.149,-4	.787,-5	-.990,-4	.320,-3
52	.564,-4	.288,-5	.463,-4	.813,-4	.221,-4	.701,-4	.496,-4	-.158,-3	-.227,-3	.131,-3
53	.733,-4	.229,-4	.968,-4	-.127,-3	-.320,-4	.801,-4	.171,-3	-.169,-4	-.234,-3	.312,-4
54	.444,-4	.101,-4	.130,-3	-.416,-4	.183,-3	-.556,-4	-.830,-4	.205,-3	.914,-4	-.148,-4
55	-.151,-4	.295,-4	.129,-4	.132,-3	.304,-3	-.243,-3	-.194,-3	.223,-3	.129,-3	-.129,-4
56	-.232,-4	.801,-4	-.911,-4	.169,-3	.183,-3	-.222,-3	.961,-4	.878,-4	-.706,-4	.190,-3
57	.572,-4	-.791,-4	-.648,-4	.562,-4	.187,-3	.490,-4	.572,-4	.659,-4	.111,-4	-.214,-
58	.929,-4	-.887,-4	-.110,-4	-.677,-4	.953,-4	.340,-3	.341,-4	-.223,-4	.713,-4	-.142,-
59	.253,-4	.389,-4	.349,-4	-.167,-3	-.101,-3	.198,-3	.622,-4	-.386,-4	.473,-4	-.218,-3
60	.000	.000	.000	.000	.000	.000	.000	.000	.000	.000

Run No. 66 ; v component

Separation Distance (m.)

N	6	12	18	24	36	42	48	72	84	90
00	.000	.000	.000	.000	.000	.000	.000	.000	.000	.000
01	.336,-2	-.353,-2	-.266,-2	.823,-2	-.245,-2	.147,-2	-.164,-2	-.254,-2	-.153,-2	-.906,-3
02	.458,-3	.963,-3	-.150,-2	.663,-2	-.149,-2	.145,-4	.673,-2	-.415,-2	.411,-3	.109,-2
03	.116,-3	.107,-2	-.469,-3	.518,-2	.305,-3	.669,-3	.349,-2	-.897,-3	-.969,-4	.121,-2
04	.251,-3	.237,-2	.410,-3	.840,-3	-.695,-3	.164,-2	-.422,-2	.592,-4	-.865,-3	.224,-4
05	.929,-4	.268,-2	.823,-3	.266,-2	.747,-3	.209,-2	-.719,-2	-.941,-4	-.647,-3	.395,-3
06	.504,-3	.323,-2	.122,-2	.390,-2	.257,-2	.146,-2	-.408,-2	.318,-3	-.834,-5	.132,-2
07	.244,-2	.258,-2	.559,-3	.241,-2	.355,-2	.183,-2	.196,-2	-.120,-2	-.172,-2	-.102,-2
08	.242,-2	.200,-2	-.113,-2	.222,-2	.281,-2	.104,-2	.726,-2	-.221,-2	-.119,-2	-.182,-2
09	.263,-2	.268,-2	.861,-4	.142,-2	.198,-2	.217,-2	.224,-2	-.267,-2	.631,-3	-.175,-2
10	.468,-2	.390,-2	.311,-2	-.137,-3	.194,-2	.175,-2	.159,-2	-.489,-2	.264,-3	-.152,-2
11	.389,-2	.193,-2	.154,-2	-.124,-2	.202,-2	-.262,-3	-.345,-3	-.222,-2	.242,-3	.109,-2
12	.131,-2	-.217,-3	-.698,-3	-.445,-2	.187,-2	-.537,-3	-.543,-3	.157,-2	.979,-4	.123,-2
13	.128,-2	.170,-3	.195,-3	-.420,-2	.789,-3	-.710,-3	.517,-3	.103,-2	.510,-3	-.481,-3
14	.134,-2	.338,-3	.172,-2	-.203,-2	.319,-3	.148,-3	-.158,-2	-.155,-2	.116,-4	-.600,-3
15	.189,-2	-.276,-3	.256,-2	-.109,-2	-.509,-3	.284,-3	-.116,-2	-.254,-2	.160,-2	.607,-3
16	.239,-2	-.142,-3	.137,-2	.314,-3	-.239,-3	-.120,-3	.654,-3	-.267,-2	.305,-2	.107,-2
17	.234,-2	-.302,-3	-.463,-3	.487,-3	-.400,-3	.592,-3	.697,-3	-.151,-2	.243,-2	-.111,-2
18	.197,-2	.976,-6	-.176,-2	-.861,-3	.418,-3	.110,-3	.252,-2	-.549,-3	.301,-2	-.885,-3
19	.140,-2	-.956,-3	-.142,-2	.145,-3	.146,-2	-.662,-3	.135,-2	-.179,-2	.194,-2	-.201,-3
20	.966,-4	-.320,-3	-.105,-2	.206,-3	.897,-3	-.835,-3	.618,-3	.437,-3	.187,-2	.378,-3
21	.361,-3	.296,-3	.403,-3	-.663,-3	.279,-3	-.559,-3	.562,-3	.227,-3	.120,-2	.188,-2
22	.750,-3	-.493,-4	.122,-2	-.438,-3	.101,-2	-.171,-3	.354,-3	-.697,-3	-.272,-5	.224,-2
23	.639,-3	-.509,-3	.590,-3	-.178,-3	.645,-3	.501,-3	.769,-3	-.140,-3	-.867,-3	.158,-2
24	.869,-3	.169,-3	.649,-3	-.732,-3	.142,-3	.902,-3	.118,-2	.611,-3	.528,-3	-.416,-3
25	.112,-2	.269,-3	.612,-3	-.437,-3	.312,-3	.964,-3	.379,-3	.286,-3	.174,-2	-.762,-3
26	.604,-3	.269,-3	.378,-3	.218,-3	.699,-4	.641,-3	.183,-4	-.255,-3	.114,-2	.111,-3
27	-.249,-3	.355,-3	-.251,-3	.411,-3	.907,-3	.452,-3	.527,-3	-.748,-3	.385,-3	.701,-5
28	-.123,-2	.339,-3	-.127,-3	-.107,-3	.135,-2	-.780,-4	.856,-3	-.374,-3	.154,-3	-.459,-3
29	-.897,-3	-.442,-3	.819,-3	-.145,-3	.983,-3	-.550,-3	.552,-4	.171,-4	-.778,-3	.428.-3
30	-.267,-3	-.605,-3	.844,-3	-.456,-3	.332,-3	-.547,-3	.248,-3	.646,-4	-.107,-2	.260,-3
31	.230,-3	-.280,-3	.436,-3	-.720,-4	.374,-3	-.821,-3	.410,-5	.711,-4	-.118,-2	.659,-3
32	.114,-3	.532,-3	-.197,-3	-.457,-3	.655,-4	-.531,-3	-.344,-3	.453,-3	-.893,-3	.424,-3
33	-.508,-3	.458,-3	-.743,-3	-.104,-2	-.759,-3	-.539,-3	.167,-3	.567,-4	-.140,-2	-.601,-3
34	-.102,-2	.270,-3	-.113,-2	-.524,-3	-.242,-3	-.609,-3	.134,-3	-.450,-4	-.152,-2	-.759,-3
35	-.991,-3	.955,-4	-.469,-3	-.105,-3	.348,-3	-.231,-4	-.148,-3	-.122,-3	-.8 5,-3	-.701,-3
36	-.106,-2	.101,-4	.436,-3	-.445,-3	.354,-3	.133,-3	-.690,-3	.520,-4	-.618,-3	-.851,-3
37	-.122,-2	-.314,-3	.614,-3	-.172,-3	.292,-3	.254,-3	-.150,-2	.827,-4	-.485,-3	-.586,-3
38	-.836,-3	.419,-4	.240,-3	-.267,-3	.134,-3	.367,-4	-.122,-2	-.199,-3	-.154,-3	-.207,-3
39	.293,-4	.502,-3	-.267,-3	-.113,-3	.117,-3	.633,-4	-.504,-3	-.415,-3	.410,-3	-.995,-4
40	.164,-4	.325,-3	.373,-3	-.214,-4	.481,-3	.168,-3	.129,-3	-.484,-3	.160,-3	-.331,-3
41	-.226,-3	.175,-4	.590,-3	-.251,-3	.599,-3	.336,-3	-.205,-4	-.116,-3	-.681,-3	.966,-4
42	-.339,-3	.561,-3	.221,-3	-.302,-6	.681,-4	.472,-3	-.239,-3	.142,-6	-.277,-3	-.424,-3
43	-.310,-3	.964,-3	.606,-3	.700,-3	.165,-3	.568,-3	-.528,-3	.252,-3	.772,-4	-.447,-3
44	-.583,-3	.701,-3	.104,-2	.937,-3	.711,-4	.396,-3	-.260,-3	.396,-3	.129,-3	-.110,-3
45	-.639,-3	.723,-3	.933,-3	.468,-3	-.681,-3	.309,-3	-.918,-4	.754,-3	.817,-3	.414,-3
46	-.428,-3	.689,-3	.317,-3	.844,-4	-.342,-3	.265,-3	-.347,-3	.892,-3	.614,-3	.613,-3
47	-.288,-3	.559,-4	-.282,-3	-.707,-4	.373,-3	.578,-4	-.689,-3	-.678,-4	.51 ,-3	.153,-3
48	-.145,-3	-.428,-3	-.300,-3	-.210,-3	.396,-3	-.393,-3	-.664,-3	-.393,-3	.802,-4	-.420,-3
49	.131,-3	-.573,-3	.129,-3	-.645,-4	-.502,-3	-.395,-3	-.246,-3	-.286,-3	-.632,-3	-.948,-4
50	-.965,-4	-.128,-3	.122,-4	.266,-3	-.235,-3	.173,-3	.123,-3	-.573,-3	-.584,-3	.146,-3
51	-.328,-3	.274,-3	-.289,-3	.208,-3	.111,-3	.400,-3	-.887,-4	-.585,-3	-.315,-3	.433,-3
52	-.299,-4	.416,-3	.309,-3	.563,-4	.440,-3	.375,-3	-.678,-4	-.125,-3	.182,-3	.749,-3
53	-.597,-3	.535,-3	.798,-3	.381,-3	.267,-3	.441,-3	.221,-3	-.747,-4	.684,-3	.892,-4
54	-.379,-3	.305,-3	.702,-3	.477,-3	-.243,-3	.314,-3	.371,-3	-.138,-3	.590,-3	-.191,-3
55	.437,-3	-.422,-3	.168,-3	.287,-3	-.462,-3	-.230,-3	-.125,-3	933,-4	.572,-3	.540,-3
56	.671,-3	-.414,-3	-.189,-3	-.499,-4	-.188,-3	-.289,-3	.169,-3	.499,-3	.419,-3	.573,-3
57	.805,-3	-.308,-3	-.375,-3	-.663,-3	.662,-3	-.611,-4	.505,-3	-.605,-3	.113,-3	.272,-3
58	.556,-3	-.386,-3	-.429,-3	-.514,-3	.141,-3	.344,-3	.277,-3	-.273,-3	.812,-3	.461,-3
59	.310,-3	-.120,-3	.263,-3	-.297,-3	-.165,-3	.799,-3	.893,-4	-.540,-3	.108,-2	.768,-3
60	.000	.000	.000	.000	.000	.000	.000	.000	.000	.000

Run No. 67 ; u component

	Separation Distance (m.)									
n	1	4	5	16	20	21	64	80	84	85
00	.000	.000	.000	.000	.000	.000	.000	.000	.000	.000
01	-.891,-2	-.530,-2	.763,-2	.136,-1	-.210,-1	-.207,-1	.877,-2	.195,-1	.105,-3	.187,-1
02	-.174,-1	.145,-2	.121,-1	.195,-3	-.771,-2	-.111,-1	-.106,-1	.140,-1	-.224,-1	-.878,-2
03	-.691,-2	-.791,-3	.148,-1	-.101,-1	.691,-2	.466,-2	-.191,-1	-.847,-3	-.111,-1	-.805,-2
04	-.210,-3	-.179,-1	.456,-3	.435,-2	.169,-1	.663,-2	-.129,-1	-.104,-1	-.429,-2	.872,-4
05	.109,-3	-.185,-1	-.402,-2	-.168,-2	.154,-1	-.582,-2	-.126,-2	-.563,-2	-.580,-2	.393,-2
06	-.402,-2	-.668,-2	.338,-2	-.374,-2	.101,-1	-.565,-2	.255,-2	-.305,-2	.686,-2	.160,-1
07	.773,-4	-.107,-1	.452,-2	.309,-2	.687,-2	-.558,-2	-.111,-3	-.232,-2	.764,-2	.115,-1
08	.164,-2	-.107,-1	-.196,-2	-.125,-2	-.721,-2	-.365,-2	.248,-2	.289,-2	-.211,-3	-.442,-3
09	.235,-2	-.795,-2	-.671,-2	.490,-3	-.797,-2	.450,-2	.347,-2	.620,-2	.297,-3	.901,-2
10	.850,-2	-.409,-3	-.322,-2	.398,-2	.295,-2	.588,-2	.202,-2	.397,-2	.420,-3	.681,-2
11	.300,-2	.606,-3	-.221,-2	-.108,-2	.243,-2	.596,-3	.361,-2	-.315,-2	.325,-4	.174,-2
12	.785,-3	.185,-2	-.791,-3	-.309,-2	-.307,-3	-.361,-2	.433,-2	-.602,-2	.179,-2	-.223,-2
13	.584,-3	.176,-2	-.167,-2	-.537,-2	.346,-2	-.581,-2	.365,-2	-.207,-2	.172,-2	-.849,-3
14	-.599,-3	.185,-2	-.142,-2	-.566,-2	.273,-2	-.227,-2	.196,-2	-.356,-3	.850,-2	.851,-2
15	-.330,-3	.153,-2	-.132,-2	.196,-3	.542,-3	-.798,-3	.174,-2	.292,-2	.193,-2	.391,-2
16	.136,-2	-.100,-2	-.449,-2	-.925,-3	-.771,-3	-.186,-3	.266,-2	.429,-2	.695,-3	.119,-2
17	.193,-2	-.246,-2	-.486,-2	-.176,-2	-.142,-3	-.138,-3	.231,-2	.120,-2	.941,-3	.595,-3
18	.775,-3	-.627,-3	-.276,-2	-.166,-2	.114,-2	.154,-2	-.361,-3	-.777,-3	-.455,-3	-.209,-3
19	-.216,-2	.266,-5	-.100,-2	-.260,-2	.162,-3	-.130,-2	.193,-2	-.578,-3	-.198,-2	-.178,-2
20	-.840,-3	.146,-2	.604,-3	-.286,-2	-.204,-2	-.254,-2	.328,-2	-.405,-2	-.705,-3	-.173,-2
21	-.126,-2	.162,-2	.131,-2	-.815,-3	-.407,-3	.407,-3	.247,-2	-.491,-2	.106,-2	-.136,-2
22	-.287,-2	.167,-2	.110,-2	.420,-3	.348,-2	.168,-2	-.642,-3	-.388,-2	.589,-4	-.101,-2
23	-.958,-3	-.217,-3	.150,-2	.166,-2	.105,-2	-.689,-3	.312,-3	-.404,-2	.425,-4	-.987,-3
24	.176,-2	.149,-4	.166,-3	.205,-2	-.647,-3	-.148,-2	.706,-3	-.277,-2	.181,-2	-.150,-2
25	.961,-3	-.164,-3	-.666,-3	.104,-2	-.117,-2	-.110,-2	.610,-3	.638,-3	.984,-3	.513,-3
26	.173,-2	-.830,-4	.970,-3	-.491,-3	-.507,-3	-.195,-2	-.245,-4	.148,-2	.155,-3	-.468,-3
27	.224,-2	-.775,-3	.272,-2	.488,-3	.127,-3	-.276,-2	.560,-3	.677,-3	.118,-2	-.253,-2
28	-.276,-3	-.129,-2	.191,-2	.146,-2	-.698,-3	-.123,-2	.165,-2	-.589,-3	.375,-3	-.265,-2
29	-.233,-3	-.107,-2	.184,-2	.311,-3	-.638,-3	-.471,-3	.116,-2	.325,-4	.398,-4	-.168,-2
30	.148,-2	-.834,-3	.211,-2	-.155,-2	-.449,-4	-.935,-3	-.137,-3	.126,-2	.696,-4	-.139,-3
31	.366,-3	-.733,-3	.979,-3	-.210,-2	-.231,-3	-.180,-2	.614,-3	.154,-3	-.113,-4	.405,-3
32	.656,-3	-.480,-3	.392,-3	-.151,-2	-.128,-2	-.286,-2	.172,-2	-.141,-2	-.102,-2	.434,-4
33	.162,-2	.301,-3	.212,-3	-.405,-3	-.200,-2	-.143,-2	.683,-3	-.320,-3	-.141,-2	-.680,-3
34	.114,-2	.113,-2	.647,-4	-.415,-3	-.873,-3	.119,-2	-.876,-3	.659,-3	-.113,-2	-.115,-2
35	-.588,-3	.624,-3	.271,-3	-.438,-3	-.324,-3	.564,-3	.765,-4	.580,-3	.134,-3	.140,-3
36	-.755,-3	-.454,-3	.972,-3	-.104,-2	.176,-3	-.249,-3	.998,-3	.555,-3	.520,-3	.119,-2
37	-.327,-3	-.144,-2	.627,-3	-.781,-3	.824,-3	-.147,-2	.105,-2	.865,-3	.860,-3	.612,-3
38	.822,-4	-.146,-3	.430,-3	-.199,-3	.382,-3	-.253,-3	.320,-3	.859,-3	-.198,-3	-.135,-3
39	.605,-3	.118,-2	.167,-3	-.123,-2	-.183,-3	.794,-3	-.827,-4	.107,-2	-.398,-3	-.970,-3
40	.690,-3	.142,-2	.662,-3	-.223,-2	-.706,-3	.715,-3	.707,-3	-.165,-3	.119,-3	-.109,-2
41	-.255,-3	.114,-2	.154,-2	-.135,-2	-.510,-3	.527,-4	.477,-3	-.307,-4	.851,-3	.279,-4
42	-.151,-3	-.356,-4	.972,-3	-.351,-3	-.851,-4	-.587,-4	.129,-3	.951,-4	.973,-3	.885,-3
43	-.985,-4	-.971,-3	-.426,-3	.256,-3	.429,-4	.665,-3	.645,-3	.933,-4	-.358,-3	.113,-2
44	.122,-3	-.553,-3	-.123,-2	-.230,-3	-.277,-3	.533,-3	.487,-3	.581,-4	-.106,-2	-.202,-3
45	.171,-3	.161,-4	.872,-4	-.315,-3	-.141,-3	.432,-3	.116,-2	.226,-3	-.875,-3	-.789,-3
46	.418,-3	.405,-3	.599,-3	.814,-4	-.363,-3	.108,-2	.108,-2	.896,-3	-.454,-3	-.215,-3
47	-.978,-4	-.199,-3	-.221,-3	-.795,-3	-.610,-3	.431,-3	-.124,-3	.611,-4	.180,-3	.910,-3
48	-.602,-3	-.109,-2	-.106,-2	-.169,-2	-.610,-3	-.352,-4	-.428,-3	-.169,-3	.109,-2	.104,-2
49	-.750,-3	-.488,-3	-.101,-2	-.109,-2	-.352,-3	-.184,-3	.471,-3	.397,-3	.191,-2	.758,-3
50	-.180,-3	.555,-3	-.654,-3	.496,-3	-.460,-3	-.195,-3	-.308,-4	.170,-3	.992,-3	.590,-3
51	.102,-3	.679,-3	.131,-3	.922,-3	-.342,-3	-.675,-3	-.992,-3	.827,-3	.266,-3	.128,-3
52	.214,-3	.298,-3	.451,-3	.369,-3	-.699,-4	-.661,-4	.113,-3	.715,-3	.755,-3	-.369,-3
53	.139,-3	.425,-3	.670,-3	.412,-3	-.302,-3	.525,-3	.653,-3	.225,-3	.864,-3	.569,-4
54	.145,-3	.859,-3	.864,-3	-.316,-3	-.189,-3	.231,-3	.621,-3	-.187,-3	.697,-3	.269,-3
55	-.399,-3	.619,-4	-.167,-3	-.119,-3	.358,-3	-.240,-3	.101,-2	-.307,-4	.336,-3	.810,-4
56	.188,-3	-.656,-3	-.693,-4	.498,-3	.384,-3	-.814,-3	.661,-3	-.468,-3	-.107,-3	.355,-3
57	.482,-3	-.111,-3	.841,-3	.761,-4	-.328,-3	-.201,-3	-.447,-3	-.714,-3	.325,-3	.131,-2
58	.315,-3	.867,-3	.805,-3	-.719,-3	-.422,-3	.753,-3	-.476,-3	.121,-3	.344,-3	.660,-3
59	.171,-3	.528,-3	.106,-3	-.272,-3	-.259,-3	.556,-3	-.509,-3	.857,-3	.424,-3	-.328,-4
60	.000	.000	.000	.000	.000	.000	.000	.000	.000	.000

Run No. 67 ; v component

Separation Distance (m.)

N	1	4	9	16	20	21	24	30	34	35
00	.000	.000	.000	.000	.000	.000	.000	.000	.000	.000
01	.163,-1	-.212,-1	-.[illegible],-3	-.20[illegible],-1	-.222,-1	-.261,-2	.189,-1	-.10[illegible],-1	-.259,-1	.436,-2
02	.503,-2	-.157,-1	-.276,-1	.11[illegible],-1	.[illegible]46,-2	-.146,-2	.[illegible]1,-3	-.[illegible]77,-2	-.114,-1	.200,-2
03	-.142,-2	-.[illegible]03,-2	-.3[illegible],-1	.[illegible]8,-1	.[illegible]1,-2	.[illegible]40,-2	-.111,-2	-.652,-2	-.161,-1	-.545,-2
04	-.7[illegible]9,-2	-.132,-1	-.2[illegible],-1	.[illegible]7,-1	.10[illegible],-1	.135,-1	.602,-2	-.413,-2	-.508,-2	-.189,-2
05	-.[illegible]74,-2	-.713,-2	-.7[illegible]2,-3	.[illegible]44,-2	.24[illegible],-2	.[illegible]79,-2	.[illegible]03,-2	-.376,-2	.470,-[illegible]	.248,-3
06	-.[illegible]13,-2	.[illegible]17,-2	.2[illegible]3,-2	-.[illegible]45,-2	.1[illegible]3,-2	-.163,-2	.123,-1	.143,-1	.312,-2	.272,-2
07	-.714,-2	.1[illegible]2,-2	.209,-3	-.[illegible]47,-2	.[illegible]03,-4	-.[illegible]06,-2	.721,-2	.115,-1	-.746,-2	.129,-2
08	-.252,-2	.213,-2	-.7[illegible]0,-2	-.[illegible]57,-3	.231,-3	-.13[illegible],-1	-.2[illegible]1	.[illegible]49,-2	-.779,-2	-.278,-2
09	-.195,-2	-.330,-3	-.137,-1	.102,-2	.117,-2	-.717,-2	-.184,-3	.7[illegible]0,-2	-.[illegible]94,-2	-.680,-2
10	-.254,-2	.111,-2	-.[illegible]12,-2	.2[illegible]5,-2	.145,-2	-.[illegible]58,-3	.[illegible]93,-2	-.177,-2	-.201,-2	-.149,-1
11	.577,-4	-.135,-2	.176,-2	-.[illegible]02,-2	.238,-2	.[illegible]66,-3	.[illegible]20,-2	-.[illegible]67,-2	-.[illegible]46,-2	-.195,-1
12	-.[illegible]34,-4	-.[illegible]23,-2	.11[illegible],-2	-.[illegible]37,-2	.345,-2	.[illegible]60,-3	-.217,-2	-.[illegible]55,-2	-.251,-2	-.[illegible]14,-2
13	-.[illegible]42[illegible],-2	.[illegible]19,-4	-.2[illegible]4,-3	-.[illegible]46,-2	.[illegible]54,-4	-.12[illegible],-2	-.11[illegible],-2	.117,-2	-.237,-2	.211,-2
14	-.[illegible]02,-2	.21[illegible],-2	-.[illegible]47,-2	-.[illegible]3[illegible],-2	.[illegible]54,-3	-.[illegible]35[illegible],-2	-.1[illegible],-2	.302,-2	-.[illegible]03,-4	.407,-2
15	-.427,-2	-.[illegible]3[illegible],-3	-.[illegible]03,-2	-.313,-2	.149,-2	.190,-2	-.112,-2	.128,-2	-.126,-2	.001,-3
16	-.163,-2	-.[illegible]29[illegible],-2	-.[illegible]42,-2	-.154,-2	.195,-2	.381,-2	.100,-2	.231,-2	.441,-3	.156,-2
17	-.444,-3	-.271,-2	-.[illegible]73,-3	-.[illegible]07,-3	.112,-2	-.175,-2	.264,-3	.159,-2	.376,-2	.332,-2
18	-.135,-3	-.[illegible]76,-3	-.[illegible]53,-3	.10[illegible],-2	.182,-2	-.351,-2	-.222,-2	.126,-2	.415,-2	.903,-2
19	-.181,-2	-.199,-2	-.250,-2	.[illegible]78,-3	-.115,-3	-.344,-2	.487,-3	-.217,-4	.693,-3	.728,-2
20	-.327,-3	-.206,-2	-.101,-2	-.130,-2	-.[illegible]36,-4	-.372,-2	.220,-2	.754,-3	.335,-3	.644,-3
21	-.246,-2	-.178,-2	.[illegible]08,-3	-.[illegible]84,-2	.[illegible]07,-3	.[illegible]56,-3	.[illegible]74,-3	.[illegible]65,-3	-.356,-3	-.410,-2
22	-.236,-2	-.397,-3	.[illegible]64,-3	-.[illegible]43,-3	.[illegible]03,-3	.1[illegible]2,-2	-.183,-2	.200,-2	.124,-2	-.795,-3
23	.178,-2	.221,-3	.[illegible]69,-2	-.150,-2	.[illegible]90,-3	.127,-2	-.134,-2	-.405,-3	.226,-2	.747,-2
24	.[illegible]07,-3	.121,-2	.234,-2	-.155,-2	.930,-3	.169,-2	.138,-2	-.271,-2	.218,-2	.[illegible]94,-2
25	-.[illegible]40,-3	.[illegible]91,-4	.512,-3	-.[illegible]61,-3	.145,-3	.162,-2	.113,-2	-.721,-3	.201,-2	.221,-2
26	-.167,-2	-.[illegible]1[illegible],-2	-.127,-2	.222,-3	.[illegible]93,-3	.273,-3	-.[illegible]81,-3	.[illegible]89,-2	.[illegible]48,-3	-.758,-3
27	-.244,-2	-.147,-2	-.171,-2	-.151,-3	.[illegible]94,-3	.156,-2	-.127,-2	-.181,-3	-.151,-2	.[illegible]03,-3
28	-.[illegible]89,-2	.411,-3	-.100,-2	-.101,-3	.700,-4	.153,-2	-.123,-2	-.577,-3	-.106,-2	.381,-2
29	-.172,-2	.[illegible]32,-4	.[illegible]69,-3	-.[illegible]59,-3	-.[illegible]94,-3	.[illegible]77,-4	-.114,-2	-.136,-3	-.101,-2	.575,-2
30	.148,-2	-.[illegible]39,-4	.[illegible]32,-3	-.[illegible]53,-3	-.130,-3	-.106,-2	-.107,-2	.188,-3	-.[illegible]79,-3	.[illegible]07,-2
31	.350,-2	-.20[illegible],-3	.[illegible]1[illegible],-3	-.[illegible]02,-3	-.[illegible]69,-3	.[illegible]00,-4	.191,-3	.129,-2	-.[illegible]61,-3	.580,-2
32	.255,-2	.[illegible]72[illegible],-3	.145,-2	-.[illegible]52,-3	.256,-3	-.160,-3	.[illegible]96,-3	.142,-2	-.[illegible]09,-3	.[illegible]77,-2
33	.[illegible]76,-3	.154,-3	.[illegible]97,-3	-.[illegible]92,-3	.124,-4	-.168,-3	.[illegible]27,-4	.[illegible]94,-3	-.132,-2	.287,-3
34	-.180,-3	-.[illegible]08,-3	-.[illegible]22,-3	.333,-3	-.[illegible]50,-3	.[illegible]10,-3	-.101,-2	.[illegible]44,-3	-.101,-2	-.222,-2
35	.[illegible]63,-4	-.[illegible]36,-3	.[illegible]05,-3	.161,-3	-.412,-3	.[illegible]98,-3	-.[illegible]47,-3	.[illegible]47,-3	-.[illegible]48,-3	-.[illegible]39,-2
36	.110,-2	.[illegible]75,-3	.100,-2	.[illegible]03,-3	-.[illegible]29,-3	-.117,-2	.[illegible]35,-3	.[illegible]05,-3	-.116,-3	-.[illegible]98,-3
37	.312,-3	.[illegible]32,-3	.[illegible]78,-3	.[illegible]44,-3	-.[illegible]83,-3	-.[illegible]37[illegible],-3	.[illegible]77,-3	-.[illegible]42,-3	-.[illegible]20,-3	-.[illegible]09,-2
38	-.126,-2	.[illegible]02,-2	.[illegible]26[illegible],-4	-.[illegible]01,-3	-.[illegible]13,-3	-.[illegible]82,-3	-.[illegible]02,-3	-.[illegible]79,-3	-.[illegible]78,-3	-.[illegible]33,-3
39	-.[illegible]33,-3	.[illegible]90,-3	.[illegible]80,-4	-.[illegible]54,-3	-.242,-3	-.[illegible]90[illegible],-3	-.[illegible]05,-2	.[illegible]09,-3	-.152,-4	-.[illegible]72,-3
40	-.356,-3	.[illegible]89,-3	-.412,-3	-.[illegible]60,-3	.197,-4	-.[illegible]51,-3	-.[illegible]10,-4	.115,-2	.[illegible]59,-3	-.310,-3
41	-.[illegible]18,-3	.[illegible]85,-3	-.112,-3	-.130,-4	-.[illegible]94,-3	.[illegible]69,-3	.[illegible]35,-4	.112,-2	-.[illegible]79,-3	-.[illegible]54,-2
42	-.176,-2	.[illegible]91,-4	.[illegible]35,-4	.143,-3	.167,-3	.[illegible]10,-3	-.[illegible]58,-3	.[illegible]24,-3	-.[illegible]76,-3	-.[illegible]52,-2
43	-.192,-2	-.168,-3	.[illegible]84,-3	.[illegible]78,-4	-.[illegible]03,-5	.[illegible]93,-3	-.113,-3	-.[illegible]71,-4	-.[illegible]76,-4	-.[illegible]17,-2
44	-.[illegible]50,-3	.128,-3	.[illegible]50,-3	.[illegible]30,-3	-.[illegible]02,-4	.172,-3	-.[illegible]02,-4	.[illegible]03,-3	-.[illegible]29,-3	.[illegible]21,-3
45	.754,-3	.[illegible]40,-3	-.[illegible]34,-3	-.[illegible]85,-4	-.[illegible]64,-3	.[illegible]17,-4	.[illegible]04,-3	.[illegible]09,-3	-.[illegible]38,-2	.[illegible]52,-3
46	-.123,-3	.[illegible]92,-3	-.[illegible]41,-3	-.[illegible]58,-3	-.[illegible]66,-3	.[illegible]12,-3	.[illegible]39,-3	.[illegible]10,-3	-.[illegible]85[illegible],-3	-.[illegible]13,-2
47	.[illegible]21,-3	.[illegible]47,-3	-.[illegible]26,-3	-.[illegible]23,-3	-.[illegible]16,-3	.[illegible]60,-3	.[illegible]09,-3	.[illegible]51,-3	-.[illegible]58,-2	-.[illegible]33,-2
48	.[illegible]32,-3	.[illegible]55,-3	-.[illegible]98,-3	-.[illegible]54,-3	-.[illegible]68,-3	.[illegible]03,-4	-.[illegible]14,-3	-.[illegible]33,-3	-.[illegible]84,-2	-.[illegible]59,-2
49	-.[illegible]48,-3	.[illegible]06,-3	-.[illegible]14,-3	-.[illegible]46,-3	-.[illegible]11,-4	.[illegible]16,-3	-.[illegible]21,-2	-.[illegible]89,-3	-.[illegible]21,-2	-.[illegible]90,-3
50	-.[illegible]22,-2	.[illegible]22,-4	.[illegible]35,-3	-.[illegible]96,-3	-.[illegible]56,-3	-.[illegible]34,-3	-.[illegible]1[illegible],-2	-.[illegible]17,-3	-.[illegible]05,-3	.113,-2
51	-.[illegible]93,-3	-.[illegible]73,-3	-.[illegible]54,-3	.[illegible]78,-5	-.[illegible]14,-3	-.[illegible]47,-3	-.[illegible]87,-3	-.[illegible]48,-3	.[illegible]24,-4	.[illegible]61,-3
52	-.[illegible]78,-3	-.[illegible]63,-3	-.[illegible]14,-2	-.[illegible]72,-3	-.[illegible]42,-3	.[illegible]15,-3	-.[illegible]48,-3	-.[illegible]73,-3	-.[illegible]16,-3	.[illegible]39,-3
53	-.[illegible]70,-3	-.[illegible]98,-4	-.[illegible]54,-3	-.[illegible]31,-3	-.[illegible]80,-3	.[illegible]58,-3	-.[illegible]11,-2	.[illegible]90,-4	-.[illegible]68,-3	.[illegible]44,-3
54	-.[illegible]91,-3	.[illegible]04,-3	.[illegible]01,-2	.[illegible]13,-3	-.[illegible]52,-3	.[illegible]67,-3	-.[illegible]10,-2	.[illegible]71,-3	.[illegible]93,-4	.[illegible]65,-2
55	.245,-3	-.317,-3	.[illegible]20,-2	.[illegible]32,-3	.[illegible]42,-3	.777,-3	-.[illegible]80,-4	-.[illegible]65,-4	.[illegible]66,-3	.[illegible]49,-2
56	.[illegible]53,-4	-.[illegible]32,-3	-.[illegible]16,-4	.[illegible]50,-3	.[illegible]68,-3	.[illegible]85,-3	.[illegible]86,-3	-.[illegible]89,-3	-.[illegible]71,-3	-.[illegible]62,-3
57	-.[illegible]07,-3	-.[illegible]55,-4	-.[illegible]78,-3	-.[illegible]06,-3	-.[illegible]67,-3	.[illegible]52,-3	.[illegible]78,-4	.[illegible]12,-3	.[illegible]60,-3	-.[illegible]27,-3
58	-.[illegible]43,-2	.[illegible]9[illegible],-4	-.[illegible]56,-3	-.[illegible]53,-3	-.[illegible]24,-3	.[illegible]72,-3	-.[illegible]66,-4	.[illegible]20,-3	.[illegible]00,-3	-.[illegible]92,-3
59	-.[illegible]15,-2	-.[illegible]53,-5	-.[illegible]41,-3	.[illegible]32,-3	-.[illegible]32,-3	.[illegible]53,-4	.[illegible]33[illegible],-3	.[illegible]70,-4	.[illegible]40,-3	-.[illegible]44,-4
60	.000	.000	.000	.000	.000	.000	.000	.000	.000	.000

Run No. 68 ; u component

Separation Distance (m.)

N	1	4	5	16	20	21	64	80	84	85
00	.000	.000	.000	.000	.000	.000	.000	.000	.000	.000
01	.131,-2	-.368,-3	-.619,-3	-.129,-2	-.137,-2	-.551,-3	.354,-2	-.480,-3	-.369,-3	-.143,-3
02	.382,-3	.744,-3	.106,-2	.438,-3	-.137,-2	-.508,-3	.361,-2	.185,-2	.108,-2	.424,-2
03	-.197,-3	.100,-2	.129,-3	.368,-3	-.142,-2	-.157,-2	.215,-2	.254,-2	.305,-2	.605,-2
04	.258,-4	-.478,-3	-.979,-3	-.153,-2	-.104,-2	-.227,-2	-.119,-3	.129,-2	.614,-3	.234,-2
05	.519,-3	-.342,-2	-.259,-2	-.178,-2	-.944,-3	-.139,-2	-.162,-2	.659,-3	.626,-3	.132,-2
06	.679,-3	-.232,-2	-.166,-2	-.127,-2	-.242,-3	-.709,-3	-.446,-3	.765,-3	.260,-2	.269,-2
07	.865,-3	-.807,-4	-.342,-4	-.933,-4	-.503,-3	-.114,-2	-.315,-3	.114,-2	.192,-2	.202,-2
08	.542,-3	.531,-3	.536,-3	.424,-3	-.935,-3	-.111,-2	-.291,-3	.441,-3	.568,-3	.438,-3
09	.157,-3	.159,-2	.513,-3	.437,-6	.163,-6	-.291,-3	-.889,-3	-.963,-4	.833,-3	.252,-3
10	.154,-3	.957,-3	-.703,-3	.140,-4	-.452,-4	-.406,-3	-.114,-2	.503,-5	.543,-4	-.375,-4
11	-.391,-3	-.296,-3	-.834,-3	-.416,-3	.654,-4	-.137,-3	-.102,-2	-.204,-3	.105,-4	.355,-3
12	-.030,-3	-.047,-3	-.740,-3	-.360,-3	.385,-3	.666,-3	-.116,-2	-.191,-3	.426,-3	.704,-3
13	-.147,-3	-.435,-3	-.654,-3	-.277,-3	.311,-4	.104,-3	-.586,-3	.333,-3	.299,-3	.667,-4
14	.140,-3	.581,-3	.196,-3	.877,-4	.550,-4	-.340,-3	.321,-3	.256,-4	.189,-4	-.622,-3
15	.417,-3	.975,-3	-.110,-3	.367,-4	-.300,-3	-.608,-3	-.178,-3	-.659,-3	.575,-4	-.418,-3
16	.309,-3	.553,-4	-.127,-3	.311,-3	-.677,-3	-.667,-3	-.651,-3	-.302,-3	-.408,-3	-.962,-3
17	.176,-3	-.670,-3	.552,-3	.570,-3	-.312,-3	-.440,-3	-.296,-3	.318,-3	-.469,-3	-.111,-2
18	.122,-3	-.648,-3	-.507,-4	.269,-4	.209,-3	-.337,-4	-.944,-4	-.922,-4	.322,-3	.120,-3
19	-.668,-4	-.106,-3	.235,-3	.108,-3	.270,-3	.427,-3	-.196,-3	-.768,-3	.401,-3	.194,-3
20	-.207,-3	.105,-3	.571,-4	.919,-4	-.559,-4	.480,-3	-.212,-3	-.211,-3	-.715,-4	-.355,-4
21	-.134,-3	-.433,-4	-.436,-3	.327,-5	-.359,-3	.211,-4	-.554,-4	-.581,-4	-.389,-3	.100,-3
22	.678,-4	-.226,-3	-.343,-3	-.437,-4	-.554,-3	-.164,-3	.276,-3	-.305,-3	-.387,-3	.358,-3
23	.548,-3	.566,-4	-.215,-3	.467,-4	-.233,-3	-.136,-3	.519,-3	-.219,-3	-.137,-3	.346,-3
24	.666,-3	.798,-4	-.365,-3	.417,-4	.266,-3	.297,-4	.581,-3	-.294,-3	.217,-3	.202,-3
25	.306,-3	.375,-3	-.180,-3	.296,-3	.427,-3	.401,-3	.317,-4	-.287,-3	.143,-3	.807,-4
26	.115,-3	.366,-3	.403,-3	.321,-3	.503,-3	.331,-3	-.219,-3	-.447,-3	-.191,-3	-.755,-4
27	.841,-4	.351,-3	.163,-3	.259,-4	.139,-3	-.761,-4	-.174,-3	-.639,-3	.111,-3	.153,-3
28	.280,-4	.126,-3	-.883,-4	.241,-4	-.113,-3	-.251,-4	-.864,-4	-.502,-3	.312,-3	.200,-3
29	-.124,-3	.210,-3	.192,-3	-.146,-4	.113,-3	.733,-4	-.161,-3	-.429,-3	.173,-3	.948,-4
30	-.109,-3	.505,-3	.370,-3	-.764,-4	.230,-3	.121,-3	.691,-4	-.959,-4	.155,-3	.242,-3
31	-.151,-3	.345,-3	.417,-3	-.124,-3	.838,-4	.110,-4	.166,-3	-.117,-3	.411,-4	.143,-4
32	-.147,-3	.777,-4	.116,-3	-.238,-3	.943,-4	-.100,-3	.213,-3	-.477,-3	-.326,-4	-.258,-3
33	-.115,-3	.135,-5	-.252,-3	-.303,-3	.750,-4	-.273,-3	-.364,-4	-.335,-3	.884,-4	.253,-4
34	.889,-5	.644,-4	-.191,-3	-.328,-3	.119,-3	-.502,-3	-.407,-4	-.111,-3	.837,-4	-.293,-4
35	.950,-4	.885,-4	-.812,-4	-.238,-3	-.280,-4	-.356,-3	-.318,-4	.167,-5	-.477,-4	-.168,-3
36	.112,-3	-.859,-5	-.996,-4	-.444,-4	-.328,-4	-.780,-4	.838,-4	.642,-4	-.174,-3	-.172,-3
37	.116,-3	-.666,-5	-.176,-3	.821,-4	.967,-4	.942,-4	.183,-3	.335,-3	-.203,-3	-.130,-3
38	-.423,-4	-.169,-5	-.195,-3	-.930,-6	.642,-4	.595,-4	.282,-3	.375,-3	-.251,-5	.275,-4
39	-.812,-4	.661,-4	-.414,-4	-.802,-4	.136,-3	-.432,-5	.108,-3	.230,-3	.405,-6	.662,-4
40	-.846,-4	.542,-4	.916,-4	-.111,-3	.140,-3	.251,-5	-.775,-6	.126,-3	-.148,-3	.216,-4
41	-.141,-3	.375,-4	.621,-4	-.526,-4	.141,-3	.447,-4	-.108,-4	.752,-4	-.109,-3	-.373,-4
42	-.856,-4	-.117,-3	.197,-4	-.517,-4	.165,-3	-.499,-4	-.756,-4	-.451,-4	-.725,-4	-.169,-3
43	-.543,-4	-.950,-4	.592,-4	.191,-4	.876,-4	-.486,-4	-.179,-3	-.111,-4	.830,-4	-.251,-4
44	-.145,-3	.968,-5	.114,-3	.101,-3	-.440,-4	-.668,-4	-.359,-4	-.572,-4	.505,-4	.984,-4
45	-.159,-3	.774,-4	.157,-3	-.176,-4	-.111,-4	-.326,-4	-.228,-4	-.277,-4	-.600,-4	.291,-4
46	-.129,-3	.575,-4	.160,-3	-.655,-4	.478,-4	.128,-3	-.618,-4	.568,-4	-.791,-4	-.743,-4
47	-.123,-3	.119,-3	.128,-3	-.839,-4	.898,-4	.162,-3	-.650,-5	.334,-4	-.189,-4	-.241,-4
48	-.123,-3	.524,-4	-.516,-4	-.114,-3	.479,-4	-.145,-4	.606,-4	-.219,-3	-.562,-4	-.988,-4
49	-.567,-4	-.380,-4	-.727,-4	-.553,-4	-.619,-4	-.107,-3	.843,-4	-.173,-3	-.580,-4	-.203,-3
50	-.475,-4	.255,-4	.610,-4	.836,-4	-.726,-4	-.406,-4	.106,-3	.139,-4	.352,-4	-.107,-3
51	-.412,-4	.152,-3	.828,-4	.205,-3	-.580,-4	.526,-4	.985,-4	.675,-4	.743,-4	-.946,-4
52	.233,-4	.839,-4	-.158,-4	.107,-3	-.255,-4	-.510,-4	.556,-4	.566,-4	-.117,-4	-.822,-4
53	.126,-3	-.125,-3	-.106,-3	-.110,-4	-.362,-4	-.143,-3	.124,-3	.172,-4	.223,-4	.474,-4
54	.140,-3	-.825,-4	-.123,-3	.616,-5	-.128,-4	-.755,-4	.110,-3	.364,-4	.459,-4	.476,-4
55	.890,-4	.386,-4	-.103,-3	.252,-4	.936,-4	.573,-4	-.697,-4	.143,-4	.653,-5	-.744,-4
56	-.604,-4	.368,-5	-.510,-4	.355,-4	.127,-3	.824,-4	-.145,-3	-.701,-4	-.575,-4	-.934,-4
57	-.660,-4	-.722,-4	-.915,-4	-.252,-4	.107,-3	.910,-4	-.343,-4	-.118,-3	.946,-5	.181,-4
58	.161,-4	-.850,-4	-.128,-3	-.556,-4	.491,-4	-.486,-4	-.975,-5	-.731,-4	.855,-4	.134,-4
59	.782,-4	-.108,-3	-.756,-4	-.604,-4	-.120,-4	-.202,-3	.374,-4	-.626,-4	.544,-4	-.569,-5
60	.000	.000	.000	.000	.000	.000	.000	.000	.000	.000

Run No. 6? ; v component

Separation Distance (Δx)

N	1	4	7	10	20	21	34	38	54	55
00	.000	.000	.000	.000	.000	.000	.000	.000	.000	.000
01	.632,-2	-.362,-3	-.777,-3	.207,-3	-.677,-2	-.724,-3	.543,-3	.309,-2	.111,-1	-.354,-3
02	.134,-2	-.406,-2	-.242,-2	.102,-2	-.381,-2	-.305,-2	-.145,-3	.604,-4	.308,-2	.939,-3
03	-.213,-2	-.447,-2	-.338,-2	-.127,-2	-.316,-2	.222,-2	.606,-2	.54_,-2	.506,-2	.274,-3
04	-.296,-3	-.757,-2	-.361,-2	-.278,-2	.106,-2	.453,-2	.577,-2	.177,-1	-.105,-2	-.314,-2
05	.896,-3	.534,-2	-.419,-2	-.165,-2	.213,-3	.213,-2	-.200,-2	.146,-1	-.412,-2	-.465,-2
06	.600,-3	.300,-2	-.135,-2	-.30_,-2	-.650,-2	.332,-2	-.935,-2	.741,-2	-.150,-2	-.290,-2
07	.291,-2	-.264,-2	-.366,-2	-.371,-2	-.775,-2	.784,-2	-.472,-2	.103,-1	-.163,-2	-.139,-2
08	.530,-3	-.291,-2	-.571,-2	-.303,-2	-.351,-2	.319,-2	-.367,-2	.673,-2	-.135,-2	-.235,-2
0_	-.485,-2	-.139,-2	-.304,-2	.669,-3	-.2_7,-2	.981,-2	-.198,-2	.196,-3	.144,-2	-.531,-2
10	-.277,-2	.124,-2	-.115,-2	.530,-2	-.208,-2	.830,-2	-.407,-2	.144,-2	-.551,-3	-.322,-2
11	-.227,-2	-.251,-3	-.116,-2	.141,-2	.946,-3	.715,-2	-.647,-2	.191,-2	.129,-3	.141,-2
12	-.203,-2	-.193,-2	-.251,-2	.117,-4	-.533,-3	.454,-2	-.963,-4	-.197,-2	.265,-3	.172,-2
13	-.131,-2	-.295,-2	-.654,-3	.605,-3	-.230,-2	.113,-2	.110,-2	-.346,-2	-.248,-2	-.240,-3
14	-.925,-3	-.490,-3	.506,-3	-.738,-3	-.210,-2	-.275,-3	.114,-2	-.546,-2	-.457,-2	-.469,-2
15	.101,-2	-.149,-3	.800,-3	.110,-3	.737,-3	-.102,-2	.271,-2	-.221,-2	-.304,-2	-.208,-2
16	.485,-3	-.400,-3	.115,-2	.899,-3	.733,-3	-.750,-3	.255,-2	-.236,-3	-.177,-2	-.305,-3
17	-.115,-2	-.127,-2	.142,-2	-.389,-3	-.625,-3	-.126,-2	.283,-2	-.298,-3	-.127,-2	-.317,-2
18	-.557,-3	-.147,-2	-.327,-3	-.101,-2	.578,-3	-.362,-3	.243,-2	-.973,-3	-.974,-4	-.173,-2
19	.166,-3	-.654,-3	.703,-3	-.235,-4	.104,-2	.212,-2	.147,-3	-.164,-2	.154,-2	.155,-2
20	.970,-4	-.259,-3	.170,-2	.148,-3	.739,-3	.210,-2	-.155,-2	-.197,-2	.546,-3	.549,-3
21	.526,-3	-.128,-3	.822,-3	.574,-3	.796,-3	-.757,-4	.323,-2	-.345,-3	-.329,-3	-.350,-3
22	.659,-3	.323,-3	.537,-3	.797,-3	.540,-3	.247,-3	.375,-2	.113,-2	-.913,-3	-.194,-2
23	.194,-3	.267,-4	.166,-3	.728,-3	-.153,-3	-.341,-3	.111,-3	-.152,-3	-.423,-3	-.234,-2
24	-.485,-3	-.268,-3	-.126,-3	.114,-3	-.836,-4	-.127,-2	-.985,-3	-.197,-2	.196,-3	-.298,-3
25	-.146,-3	-.175,-3	.766,-3	-.136,-3	.482,-5	-.122,-2	-.168,-2	-.200,-2	-.796,-3	.914,-3
26	.106,-3	.581,-3	.175,-3	-.112,-3	-.874,-4	-.182,-3	-.104,-2	-.667,-3	-.101,-2	.544,-3
27	-.298,-3	.797,-3	-.832,-3	-.228,-4	-.143,-3	.104,-2	-.104,-2	-.618,-5	-.104,-3	-.602,-3
28	-.657,-3	.263,-3	-.300,-3	-.278,-3	-.197,-3	.124,-2	-.865,-3	-.641,-3	.483,-3	-.891,-3
29	-.847,-3	-.244,-3	.864,-3	-.287,-3	.338,-4	.687,-3	-.209,-3	.238,-3	-.328,-3	-.127,-2
30	-.534,-3	-.109,-3	.273,-3	.281,-4	.527,-3	-.529,-3	-.635,-3	.567,-3	-.683,-3	-.111,-2
31	.825,-4	-.617,-5	-.602,-3	-.150,-3	.491,-3	-.132,-2	-.327,-3	-.115,-3	-.197,-3	-.240,-3
32	.490,-3	-.394,-4	-.946,-3	-.365,-3	.986,-4	-.550,-3	-.199,-3	.403,-3	-.128,-3	.456,-5
33	.363,-3	.122,-3	-.540,-4	-.272,-3	-.258,-3	-.558,-4	-.319,-3	.522,-3	.208,-4	.244,-3
34	-.534,-4	.430,-3	.483,-3	-.253,-3	-.181,-3	-.355,-4	.140,-3	-.282,-3	.113,-3	-.276,-3
35	-.796,-4	.441,-3	.370,-3	-.254,-5	-.111,-3	-.143,-3	.520,-3	-.101,-3	.854,-4	-.407,-3
36	.139,-3	.206,-3	.128,-3	.566,-4	.191,-4	-.126,-3	.625,-3	.295,-3	.173,-3	-.933,-3
37	.123,-3	.113,-3	.430,-5	-.652,-4	.783,-4	.110,-3	.764,-3	.217,-3	.307,-3	-.435,-3
38	-.290,-3	.144,-3	.291,-3	-.188,-3	-.415,-5	.113,-3	.802,-3	.220,-3	.427,-3	.402,-4
39	-.177,-3	-.104,-3	.220,-3	.170,-4	-.412,-5	-.[illegible],-4	.450,-3	-.476,-3	.[illegible],-3	.030,-4
40	-.110,-3	-.814,-4	-.123,-3	-.105,-3	.131,-3	.[illegible],-3	.[illegible],-3	-.270,-3	.282,-4	-.402,-4
41	-.222,-3	-.101,-3	-.306,-3	.195,-4	.210,-4	.795,-4	-.796,-4	-.208,-5	-.202,-3	-.466,-3
42	-.244,-3	-.165,-3	-.957,-3	.280,-3	-.116,-3	-.300,-4	.397,-3	-.414,-3	.119,-5	-.547,-3
43	.106,-3	-.259,-3	-.428,-3	.138,-3	-.588,-4	.345,-3	.640,-3	-.445,-3	.415,-3	-.774,-4
44	-.645,-4	-.151,-3	-.195,-3	-.154,-3	.553,-4	.313,-3	.220,-3	-.337,-3	.424,-3	-.467,-4
45	-.248,-3	.400,-4	-.117,-3	-.447,-3	.372,-4	.672,-4	.345,-3	-.194,-3	.377,-3	-.453,-3
46	-.147,-3	-.469,-5	-.146,-3	-.225,-3	-.177,-4	.132,-3	.527,-3	.135,-3	.257,-3	-.861,-3
47	.700,-4	-.380,-3	.250,-3	.115,-3	-.126,-3	.876,-4	.223,-4	-.361,-3	-.504,-5	-.212,-3
48	.115,-3	-.555,-3	.606,-3	.204,-3	-.105,-3	.914,-4	-.215,-4	-.664,-3	-.255,-3	.640,-3
49	.145,-3	-.303,-3	.124,-3	-.600,-4	.322,-4	-.115,-3	.342,-3	-.208,-3	.932,-4	.694,-3
50	.206,-3	-.101,-3	-.304,-3	-.916,-4	.174,-3	-.427,-3	.691,-4	-.264,-3	.913,-4	.132,-3
51	.121,-3	-.477,-4	-.306,-4	.975,-4	-.650,-4	-.176,-3	.177,-3	-.266,-4	.730,-5	.279,-4
52	-.148,-4	-.145,-3	.944,-5	-.722,-4	-.262,-3	.114,-3	-.140,-3	.415,-3	-.197,-3	.106,-3
53	.833,-4	-.765,-4	-.243,-3	-.367,-4	-.281,-4	.373,-4	-.524,-5	-.125,-3	-.130,-3	.280,-3
54	.245,-3	.156,-4	-.415,-3	.302,-3	-.245,-3	-.455,-3	-.116,-4	-.537,-3	.725,-4	.559,-4
55	.184,-3	-.631,-4	-.210,-3	.304,-3	-.214,-3	-.234,-3	.656,-3	-.328,-3	.227,-3	-.522,-3
56	.221,-3	.315,-4	.904,-4	.935,-5	-.176,-3	.319,-3	.483,-3	-.789,-4	.206,-3	-.658,-3
57	.332,-3	.104,-3	.167,-3	-.542,-4	-.184,-3	.467,-3	.137,-3	.109,-3	-.128,-4	-.472,-3
58	.295,-3	-.131,-4	-.242,-3	.551,-5	-.291,-3	.641,-3	.188,-4	.302,-3	-.121,-3	-.245,-3
59	.161,-5	-.311,-4	-.563,-3	.171,-4	-.241,-3	.453,-3	-.111,-3	.186,-3	-.180,-3	-.221,-3
60	.000	.000	.000	.000	.000	.000	.000	.000	.000	.000

Run No. 68 ; u component

	Separation Distance (in.)									
N	1	4	5	16	20	21	34	80	84	85
00	.000	.000	.000	.000	.000	.000	.000	.000	.000	.000
01	.131,-2	-.368,-3	-.619,-3	-.129,-2	-.137,-2	-.551,-3	.354,-2	-.480,-3	-.369,-3	-.143,-3
02	.382,-3	.744,-3	.106,-2	.498,-3	-.137,-2	-.506,-3	.361,-2	.185,-2	.108,-2	.424,-2
03	-.197,-3	.100,-2	.129,-3	.363,-3	-.142,-2	-.157,-2	.215,-2	.254,-2	.309,-2	.605,-2
04	.258,-4	-.478,-3	-.979,-3	-.153,-2	-.104,-2	-.227,-2	-.119,-3	.129,-2	.814,-3	.234,-2
05	.519,-3	-.342,-2	-.259,-2	-.178,-2	-.344,-3	-.139,-2	-.162,-2	.659,-3	.626,-3	.132,-2
06	.679,-3	-.232,-2	-.166,-2	-.127,-2	-.242,-3	-.709,-3	-.446,-3	.765,-3	.260,-2	.269,-2
07	.865,-3	-.807,-4	-.342,-4	-.933,-4	-.503,-3	-.114,-2	-.315,-3	.114,-2	192,-2	.202,-2
08	.742,-3	.531,-3	.536,-3	.424,-3	-.935,-3	-.111,-2	-.291,-3	.441,-3	.568,-3	.438,-3
09	.157,-3	.159,-2	.513,-3	.437,-6	.163,-6	-.291,-3	-.889,-3	-.963,-4	.833,-3	.252,-3
10	.154,-3	.957,-3	-.709,-3	.140,-4	-.452,-4	-.406,-3	-.114,-2	.503,-5	.543,-4	-.375,-4
11	-.391,-3	-.296,-3	-.834,-3	-.416,-3	.654,-4	-.137,-3	-.102,-2	-.204,-3	.105,-4	.355,-3
12	-.030,-3	-.347,-3	-.744,-3	-.368,-3	.385,-3	.666,-3	-.116,-2	-.191,-3	.426,-3	.704,-3
13	-.147,-3	-.435,-3	-.654,-3	-.277,-3	.311,-4	.104,-3	-.586,-3	.333,-3	.299,-3	.667,-4
14	.140,-3	.581,-3	.196,-3	.877,-4	.550,-4	-.340,-3	.321,-3	.256,-4	.189,-4	-.622,-3
15	.417,-3	.975,-3	-.110,-3	.367,-4	-.300,-3	-.608,-3	-.178,-3	-.659,-3	.575,-4	-.418,-3
16	.303,-3	.553,-4	-.127,-3	.311,-3	-.677,-3	-.667,-3	-.651,-3	-.302,-3	-.408,-3	-.962,-3
17	.176,-3	-.670,-3	.552,-3	.570,-3	-.312,-3	-.440,-3	-.296,-3	.318,-3	-.469,-3	-.111,-2
18	.122,-3	-.648,-3	-.507,-4	.269,-4	.203,-3	-.337,-4	-.944,-4	-.922,-4	.322,-3	.120,-3
19	-.668,-4	-.106,-3	.235,-3	.108,-3	.270,-3	.427,-3	-.196,-3	-.768,-3	.401,-3	.194,-3
20	-.207,-3	.105,-3	.571,-4	.919,-4	-.559,-4	.480,-3	-.212,-3	-.217,-3	-.715,-4	-.335,-4
21	-.134,-3	-.433,-4	-.436,-3	.327,-5	-.359,-3	.211,-4	-.554,-4	-.581,-4	-.389,-3	.100,-3
22	.678,-4	-.226,-3	-.343,-3	-.437,-4	-.554,-3	-.164,-3	.276,-3	-.308,-3	-.387,-3	.358,-3
23	.548,-3	.566,-4	-.215,-3	.467,-4	-.233,-3	-.136,-3	.519,-3	-.219,-3	-.137,-3	.344,-3
24	.666,-3	.798,-4	-.365,-3	.417,-4	.266,-3	.237,-4	.581,-3	-.294,-3	.217,-3	.202,-3
25	.306,-3	.375,-3	-.180,-3	.296,-3	.427,-3	.401,-3	.317,-4	-.287,-3	.143,-3	.807,-4
26	.115,-3	.366,-3	.408,-3	.321,-3	.503,-3	.331,-3	-.219,-3	-.447,-3	-.191,-3	-.755,-4
27	.841,-4	.351,-3	.163,-3	.259,-4	.139,-3	-.761,-4	-.174,-3	-.639,-3	.111,-3	.153,-3
28	.260,-4	.126,-3	-.883,-4	.241,-4	-.113,-3	-.251,-4	-.864,-4	-.502,-3	.312,-3	.200,-3
29	-.124,-3	.210,-3	.192,-3	-.146,-4	.113,-3	.733,-4	-.161,-3	-.429,-3	.173,-3	.948,-4
30	-.109,-3	.505,-3	.370,-3	-.764,-4	.250,-3	.121,-3	.691,-4	-.959,-4	.155,-3	.242,-3
31	-.151,-3	.345,-3	.417,-3	-.124,-3	.838,-4	.110,-4	.166,-3	-.117,-3	.411,-4	.143,-4
32	-.147,-3	.777,-4	.116,-3	-.238,-3	.943,-4	-.100,-3	.213,-3	-.477,-3	-.326,-4	-.258,-3
33	-.115,-3	-.135,-5	-.252,-3	-.303,-3	.750,-4	-.273,-3	-.324,-4	-.335,-3	.884,-4	.253,-4
34	.889,-5	.644,-4	-.197,-3	-.328,-3	.119,-3	-.502,-3	-.407,-4	-.111,-3	.837,-4	-.293,-4
35	.950,-4	.885,-4	-.812,-4	-.238,-3	-.280,-4	-.356,-3	-.318,-4	.167,-5	-.477,-4	-.168,-3
36	.112,-3	-.859,-5	-.996,-4	-.444,-4	-.328,-4	-.780,-4	.838,-4	.642,-4	-.174,-3	-.172,-3
37	.116,-3	-.666,-5	-.176,-3	.821,-4	.967,-4	.942,-4	.183,-3	.335,-3	-.203,-3	-.130,-3
38	-.423,-4	-.169,-5	-.195,-3	-.930,-6	.642,-4	.595,-4	.282,-3	.375,-3	-.251,-5	.275,-4
39	-.812,-4	.661,-4	-.414,-4	-.802,-4	.136,-3	-.432,-5	.108,-3	.230,-3	.405,-6	.662,-4
40	-.846,-4	.542,-4	.916,-4	-.111,-3	.140,-3	.251,-5	-.779,-6	.126,-3	-.148,-3	.216,-4
41	-.141,-3	.375,-4	.621,-4	-.526,-4	.141,-3	.447,-4	-.138,-4	.752,-4	-.109,-3	-.373,-4
42	-.856,-4	-.117,-3	.197,-4	-.517,-4	.165,-3	-.499,-4	-.756,-4	-.451,-4	-.725,-4	-.169,-3
43	-.543,-4	-.950,-4	.592,-4	.191,-4	.876,-4	-.486,-4	-.179,-3	-.111,-4	.830,-4	-.251,-4
44	-.145,-3	.968,-5	.114,-3	.101,-3	-.440,-4	-.668,-4	-.359,-4	-.572,-4	.505,-4	.984,-4
45	-.159,-3	.774,-4	.157,-3	-.176,-4	-.111,-4	-.326,-4	-.228,-4	-.277,-4	-.600,-4	.291,-4
46	-.129,-3	.575,-4	.160,-3	-.855,-4	.478,-4	.128,-3	-.618,-4	.568,-4	-.791,-4	-.743,-4
47	-.123,-3	.113,-3	.128,-3	-.836,-4	.698,-4	.162,-3	-.650,-5	.334,-4	-.182,-4	-.241,-4
48	-.123,-3	.524,-4	-.516,-4	-.114,-3	.479,-4	-.145,-4	.606,-4	-.219,-3	-.562,-4	-.988,-4
49	-.567,-4	-.380,-4	-.727,-4	-.553,-4	-.610,-4	-.107,-3	.643,-4	-.173,-3	-.580,-4	-.203,-3
50	-.475,-4	.255,-4	.610,-4	.536,-4	-.726,-4	-.406,-4	.106,-3	.139,-4	.352,-4	-.107,-3
51	-.412,-4	.152,-3	.828,-4	.203,-3	-.580,-4	.526,-4	.985,-4	.675,-4	.743,-4	-.946,-4
52	.233,-4	.839,-4	-.158,-4	.107,-3	-.255,-4	-.510,-4	.556,-4	.566,-4	-.117,-4	-.822,-4
53	.126,-3	-.125,-3	-.106,-3	-.110,-4	-.362,-4	-.143,-3	.124,-3	.172,-4	.223,-4	.474,-4
54	.140,-3	-.825,-4	-.123,-3	.616,-5	-.128,-4	-.755,-4	.110,-3	.364,-4	.459,-4	.476,-4
55	.890,-4	.336,-4	-.103,-3	.252,-4	.936,-4	.573,-4	-.697,-4	.143,-4	.653,-5	-.744,-4
56	-.604,-4	.368,-5	-.510,-4	.355,-4	.127,-3	.824,-4	-.145,-3	-.701,-4	-.575,-4	-.934,-4
57	-.660,-4	-.722,-4	-.915,-4	-.252,-4	.107,-3	.910,-4	-.343,-4	-.118,-3	.946,-5	.181,-4
58	.161,-4	-.990,-4	-.128,-3	-.556,-4	.491,-4	-.486,-4	-.975,-5	-.731,-4	.895,-4	.134,-4
59	.782,-4	-.108,-3	-.756,-4	-.604,-4	-.120,-4	-.202,-3	.374,-4	-.626,-4	.544,-4	-.569,-5
60	.000	.000	.000	.000	.000	.000	.000	.000	.000	.000

Run No. 68 ; v component

Separation Distance (Δ_x)

N	1	4	5	16	20	21	24	28	24	05
00	.000	.000	.000	.000	.000	.000	.000	.000	.000	.000
01	.632,-2	-.362,-3	-.777,-3	.207,-2	-.[illegible],-2	-.784,-3	.543,-3	.302,-2	.111,-1	-.954,-3
02	.134,-2	-.[illegible],-2	-.642,-2	.[illegible],-2	-.381,-2	-.365,-2	-.14 ,-3	.664,-4	.[illegible],-2	.539,-3
03	-.21[illegible],-2	-.[illegible]47,-2	-.[illegible]39,-2	-.127,-2	-.316,-2	.222,-2	.[illegible]00,-2	.54[illegible],-2	.506,-2	.[illegible]74,-3
04	-.29[illegible],-3	-.757,-2	-.361,-2	-.[illegible]79,-2	.106,-2	.455,-2	.507,-2	.157,-1	-.10[illegible],-2	-.21[illegible],-2
05	.896,-3	.534,-2	-.415,-2	-.165,-2	.213,-3	.213,-2	-.280,-2	.145,-1	-.412,-2	-.465,-2
06	.600,-3	.300,-2	-.[illegible]3,-2	-.30 ,-2	-.650,-2	.332,-2	-.835,-2	.741,-2	-.156,-2	-.[illegible]0,-2
07	.201,-2	-.204,-2	-.306,-2	-.371,-2	-.775,-2	.[illegible]94,-2	-.472,-2	.108,-1	-.163,-2	-.[illegible]3,-2
08	.530,-3	-.2[illegible]1,-2	-.571,-2	-.303,-2	-.351,-2	.[illegible]10,-2	-.367,-2	.673,-2	-.135,-2	-.239,-2
09	-.485,-2	-.[illegible]38,-2	-.304,-2	.[illegible]89,-3	-.[illegible]00,-2	.931,-2	-.[illegible]58,-2	.196,-3	.144,-2	-.531,-2
10	-.277,-2	.124,-2	-.[illegible]15,-2	.530,-2	-.202,-2	.333,-2	-.[illegible]37,-2	.144,-2	-.551,-3	-.322,-2
11	-.227,-2	-.251,-3	-.[illegible]16,-2	.141,-2	.[illegible]46,-3	.715,-2	-.647,-2	.191,-2	.129,-3	.141,-2
12	-.208,-2	-.[illegible]93,-2	-.251,-2	.117,-4	-.[illegible]93,-3	.454,-2	-.[illegible]83,-4	-.[illegible]37,-2	.265,-3	.172,-2
13	-.131,-2	-.225,-2	-.[illegible]54,-3	-.[illegible]00,-3	-.[illegible]28,-2	.113,-2	.110,-2	-.346,-2	-.248,-2	-.240,-3
14	-.[illegible]29,-3	-.[illegible]40,-3	.[illegible]06,-3	-.738,-3	-.210,-2	-.[illegible]78,-3	.114,-2	-.346,-2	-.457,-2	-.[illegible]60,-2
15	.[illegible]00,-2	-.[illegible]49,-3	.[illegible]80,-3	.110,-3	.[illegible]73,-3	-.162,-2	.271,-2	-.221,-2	- 304,-2	-.[illegible]38,-2
16	.[illegible]25,-3	-.[illegible]06,-3	.115,-2	.[illegible]99,-3	.[illegible]33,-3	-.750,-3	.255,-2	-.[illegible]36,-3	-.177,-2	-.365,-3
17	-.115,-2	-.127,-2	.142,-2	-.[illegible]39,-3	-.625,-3	-.[illegible]26,-2	.283,-2	-.[illegible]98,-3	-.127,-2	-.317,-2
18	-.557,-3	-.147,-2	-.327,-3	-.101,-2	.[illegible]78,-3	-.362,-3	.243,-2	-.973,-3	-.974,-4	-.173,-2
19	.166,-3	-.[illegible]94,-3	.[illegible]08,-3	-.[illegible]35,-4	.104,-2	.212,-2	.147,-3	-.164,-2	.154,-2	.159,-2
20	.970,-4	-.259,-3	.170,-2	.148,-3	.739,-3	.210,-2	-.155,-2	-.[illegible]37,-2	.546,-3	.549,-3
21	.526,-3	-.[illegible]28,-3	.[illegible]22,-3	.574,-3	.796,-3	-.757,-4	.323,-2	-.345,-3	-.[illegible]29,-3	-.350,-3
22	.[illegible]59,-3	.323,-3	.[illegible]27,-3	.797,-3	.540,-3	.247,-3	.[illegible]75,-2	.[illegible]18,-2	-.[illegible]13,-3	-.194,-2
23	.194,-3	.267,-4	.166,-3	.726,-3	-.[illegible]53,-3	-.341,-3	.111,-3	-.152,-3	-.[illegible]23,-3	-.234,-2
24	-.[illegible]85,-3	-.268,-3	-.126,-3	.114,-3	-.[illegible]36,-4	-.127,-2	-.985,-3	-.[illegible]37,-2	.196,-3	-.[illegible]93,-3
25	-.146,-3	-.175,-3	.766,-3	-.136,-3	.[illegible]82,-5	-.122,-2	-.[illegible]68,-2	-.200,-2	-.796,-3	.914,-3
26	.106,-3	.[illegible]81,-3	.175,-3	-.112,-3	-.874,-4	-.[illegible]82,-3	-.104,-2	-.[illegible]67,-3	-.101,-2	.544,-3
27	-.[illegible]98,-3	.797,-3	-.[illegible]32,-3	-.[illegible]28,-4	-.143,-3	.104,-2	-.104,-2	-.[illegible]18,-5	-.104,-3	-.[illegible]02,-3
28	-.[illegible]67,-3	.263,-3	-.[illegible]00,-3	-.[illegible]78,-3	-.[illegible]97,-3	.124,-2	-.[illegible]65,-3	-.[illegible]41,-3	.[illegible]83,-3	-.[illegible]91,-3
29	-.[illegible]47,-3	-.[illegible]44,-3	.[illegible]64,-3	-.[illegible]87,-3	.[illegible]38,-4	.[illegible]87,-3	-.[illegible]25,-3	.[illegible]38,-3	-.[illegible]28,-3	-.127,-2
30	-.[illegible]34,-3	-.[illegible]09,-3	.[illegible]73,-3	.[illegible]81,-4	.[illegible]27,-3	-.[illegible]2[illegible],-3	-.[illegible]35,-3	.[illegible]07,-3	-.[illegible]83,-3	-.111,-2
31	.[illegible]25,-4	-.[illegible]17,-5	-.[illegible]02,-3	-.150,-3	.[illegible]31,-3	-.132,-2	-.[illegible]27,-3	-.[illegible]15,-3	-.[illegible]97,-3	-.240,-3
32	.[illegible]90,-3	-.[illegible]94,-4	-.[illegible]46,-3	-.[illegible]65,-3	.[illegible]96,-4	-.[illegible]56,-3	-.[illegible]99,-3	.[illegible]03,-3	-.[illegible]28,-3	.[illegible]86,-3
33	.[illegible]63,-3	.122,-3	-.[illegible]40,-4	-.[illegible]72,-3	-.[illegible]50,-3	-.[illegible]58,-4	-.[illegible]19,-3	.[illegible]22,-3	.[illegible]08,-4	.[illegible]44,-3
34	-.[illegible]34,-4	.[illegible]70,-3	.[illegible]83,-3	-.[illegible]53,-3	-.181,-3	-.[illegible]55,-4	.[illegible]40,-3	-.[illegible]82,-3	.[illegible]18,-3	-.276,-3
35	-.[illegible]96,-4	.[illegible]41,-3	.[illegible]70,-3	-.[illegible]54,-5	-.[illegible]11,-3	-.[illegible]43,-3	.[illegible]20,-3	-.[illegible]01,-3	.[illegible]64,-4	-.[illegible]07,-3
36	.[illegible]39,-3	.[illegible]20[illegible],-3	.[illegible]28,-3	-.[illegible]66,-4	.[illegible]91,-4	-.[illegible]26,-3	.[illegible]25,-3	.[illegible]85,-3	.[illegible]73,-3	-.[illegible]25,-3
37	.[illegible]23,-3	.[illegible]13,-3	.[illegible]80,-3	-.[illegible]52,-4	.[illegible]78,-4	.[illegible]10,-3	.[illegible]76,-3	.[illegible]17,-3	.[illegible]20[illegible],-3	-.[illegible]45,-3
38	-.[illegible]20,-3	.[illegible]44,-3	.[illegible]21,-3	-.[illegible]08,-3	-.[illegible]41[illegible],-3	.[illegible]13,-3	.[illegible]02,-3	.[illegible]20,-3	.[illegible]47,-3	.[illegible]28,-4
39	-.[illegible]77,-3	-.[illegible]04,-3	.[illegible]22[illegible],-3	.[illegible]76,-4	-.[illegible]12,-3	-.[illegible]60,-4	.[illegible]50,-3	-.[illegible]46,-3	.[illegible]31,-3	.[illegible]20,-4
40	-.[illegible]18,-3	-.[illegible]14,-4	-.[illegible]23,-3	-.[illegible]05,-3	.[illegible]31,-3	.[illegible]02,-3	.[illegible]03,-3	-.[illegible]70,-3	.[illegible]32,-4	-.[illegible]02,-4
41	-.[illegible]22,-3	-.[illegible]01,-3	-.[illegible]20[illegible],-3	.[illegible]95,-4	.[illegible]10,-4	.[illegible]55,-4	-.[illegible]70[illegible],-4	-.[illegible]20[illegible],-5	-.[illegible]20[illegible],-3	-.[illegible]66,-3
42	-.[illegible]44,-3	-.[illegible]65,-3	-.[illegible]57,-3	.[illegible]30,-3	-.[illegible]16,-3	-.[illegible]06,-4	.[illegible]47,-3	-.[illegible]14,-3	.[illegible]19,-5	-.[illegible]47,-3
43	.[illegible]06,-3	-.[illegible]59,-3	-.[illegible]28,-3	.[illegible]38,-3	-.[illegible]88,-4	.[illegible]45,-3	.[illegible]40,-3	-.[illegible]45,-3	.[illegible]15,-3	-.[illegible]74,-4
44	-.[illegible]45,-4	-.[illegible]51,-3	-.[illegible]95,-3	-.[illegible]54,-3	.[illegible]53,-4	.[illegible]19,-3	.[illegible]20,-3	-.[illegible]37,-3	.[illegible]24,-3	-.[illegible]67,-4
45	-.[illegible]48,-3	.[illegible]00,-4	-.[illegible]17,-3	-.[illegible]47,-3	.[illegible]72,-4	.[illegible]72,-4	.[illegible]30,-3	-.[illegible]54,-3	.[illegible]77,-3	-.[illegible]82,-3
46	-.[illegible]47,-3	-.[illegible]69,-5	-.[illegible]46,-3	-.[illegible]25,-3	-.[illegible]77,-4	.[illegible]32,-3	.[illegible]27,-3	.[illegible]35,-3	.[illegible]57,-3	-.[illegible]8[illegible],-3
47	.700,-4	-.[illegible]10,-3	.[illegible]56,-3	.[illegible]15,-3	-.[illegible]20,-3	-.[illegible]76,-4	.[illegible]25,-4	-.[illegible]81,-3	-.[illegible]94,-5	-.[illegible]12,-3
48	.[illegible]15,-3	-.[illegible]55,-3	.[illegible]66,-3	.[illegible]04,-3	-.[illegible]25,-3	-.[illegible]14,-4	-.[illegible]21[illegible],-4	-.[illegible]04,-3	-.[illegible]35,-3	.[illegible]43,-3
49	.[illegible]45,-3	-.[illegible]03,-3	.[illegible]24,-3	-.[illegible]00,-4	.[illegible]22,-4	-.[illegible]15,-3	.[illegible]42,-3	-.[illegible]20[illegible],-3	.[illegible]32,-4	.[illegible]04,-3
50	.[illegible]20[illegible],-3	-.[illegible]01,-3	-.[illegible]94,-3	-.[illegible]51[illegible],-4	.[illegible]74,-3	-.[illegible]37,-3	.[illegible]91,-4	-.[illegible]64,-3	.[illegible]19,-4	.[illegible]02,-3
51	.[illegible]21,-3	-.[illegible]77,-4	-.[illegible]3[illegible],-4	.[illegible]75,-4	-.[illegible]00[illegible],-4	-.[illegible]76,-3	.[illegible]77,-3	-.[illegible]26[illegible],-4	.[illegible]30,-5	.[illegible]27[illegible],-4
52	-.[illegible]48,-4	-.[illegible]45,-3	.[illegible]44,-3	-.[illegible]22,-4	-.[illegible]32,-3	.[illegible]14,-3	-.[illegible]40,-3	.[illegible]15,-3	-.[illegible]97,-3	.[illegible]06,-3
53	.[illegible]33,-4	-.[illegible]76[illegible],-4	-.[illegible]43,-3	-.[illegible]27,-4	-.[illegible]21,-3	.[illegible]73,-4	-.[illegible]24,-3	-.[illegible]12[illegible],-3	-.[illegible]00,-3	.[illegible]30,-3
54	.[illegible]45,-3	.[illegible]06,-4	-.[illegible]15,-3	.[illegible]92,-3	-.[illegible]45,-3	-.[illegible]55,-3	-.[illegible]16,-4	-.[illegible]57,-3	.[illegible]25,-4	.[illegible]53,-4
55	.[illegible]34,-3	-.[illegible]31,-4	-.[illegible]10,-3	.[illegible]04,-3	-.[illegible]14,-3	-.[illegible]04,-3	.[illegible]66,-3	-.[illegible]35[illegible],-3	.[illegible]27,-3	-.[illegible]22,-3
56	.[illegible]21,-3	.[illegible]15,-4	.[illegible]04,-4	.[illegible]35,-5	-.[illegible]76,-3	.[illegible]19,-3	.[illegible]43,-3	-.[illegible]78[illegible],-4	.[illegible]20[illegible],-3	-.[illegible]53,-3
57	.[illegible]32,-3	.[illegible]04,-3	.[illegible]67,-3	-.[illegible]42,-4	-.[illegible]84,-3	.[illegible]47,-3	.[illegible]67,-3	.[illegible]76,-3	-.[illegible]26,-4	-.[illegible]72,-3
58	.[illegible]29[illegible],-3	-.[illegible]31,-4	-.[illegible]42,-3	.[illegible]51,-5	-.[illegible]21,-3	.[illegible]41,-3	.[illegible]83,-4	.[illegible]02,-3	-.[illegible]21,-3	-.[illegible]45,-3
59	.[illegible]61,-5	-.[illegible]11,-4	-.[illegible]63,-3	.[illegible]71,-4	-.[illegible]41,-3	.[illegible]53,-3	-.[illegible]11,-3	.[illegible]26,-3	-.[illegible]80,-3	-.[illegible]21,-3
60	.000	.000	.000	.000	.000	.000	.000	.000	.000	.000

TABLE 17.11

Results of aliasing experiment for anemometer No. 2, run No. 7. Smoothed spectral density estimates in units of percent of variance/unit frequency interval. [$\bar{U}$ = 4.120 m/sec; σ(u) = 1.29 m/sec; σ(v) = 1.52 m/sec; σ(w) = 0.333 m/sec.]

	COMPONENT				COMPONENT		
N	u	v	w	N	u	v	w
0	.367	.422	.445,-1	30	.126,-2	.176,-2	.814,-2
1	.296	.264	.434,-1	31	.108,-2	.140,-2	.929,-2
2	.122	.710,-1	.471,-1	32	.123,-2	.138,-2	.109,-1
3	.336,-1	.255,-1	.579,-1	33	.130,-2	.134,-2	.105,-1
4	.184,-1	.166,-1	.446,-1	34	.101,-2	.140,-2	.974,-2
5	.189,-1	.110,-1	.378,-1	35	.691,-3	.174,-2	.104,-1
6	.187,-1	.944,-2	.310,-1	36	.691,-3	.151,-2	.106,-1
7	.171,-1	.705,-2	.271,-1	37	.721,-3	.114,-2	.102,-1
8	.137,-1	.632,-2	.307,-1	38	.685,-3	.124,-2	.106,-1
9	.955,-2	.688,-2	.288,-1	39	.649,-3	.139,-2	.749,-2
10	.751,-2	.506,-2	.252,-1	40	.585,-3	.134,-2	.702,-2
11	.637,-2	.346,-2	.198,-1	41	.515,-3	.133,-2	.100,-1
12	.637,-2	.243,-2	.203,-1	42	.517,-3	.108,-2	.101,-1
13	.490,-2	.231,-2	.212,-1	43	.530,-3	.100,-2	.983,-2
14	.382,-2	.270,-2	.175,-1	44	.661,-3	.107,-2	.110,-1
15	.385,-2	.429,-2	.165,-1	45	.751,-3	.111,-2	.123,-1
16	.380,-2	.406,-2	.144,-1	46	.685,-3	.101,-2	.128,-1
17	.309,-2	.337,-2	.938,-2	47	.631,-3	.948,-3	.833,-2
18	.295,-2	.286,-2	.920,-2	48	.625,-3	.111,-2	.662,-2
19	.260,-2	.266,-2	.116,-1	49	.613,-3	.114,-2	.813,-2
20	.176,-2	.183,-2	.152,-1	50	.440,-3	.116,-2	.929,-2
21	.180,-2	.139,-2	.156,-1	51	.315,-3	.125,-2	.864,-2
22	.186,-2	.161,-2	.150,-1	52	.320,-3	.119,-2	.749,-2
23	.201,-2	.176,-2	.154,-1	53	.309,-3	.102,-2	.785,-2
24	.218,-2	.180,-2	.157,-1	54	.290,-3	.922,-3	.709,-2
25	.195,-2	.170,-2	.166,-1	55	.322,-3	.100,-2	.739,-2
26	.197,-2	.152,-2	.161,-1	56	.314,-3	.112,-2	.785,-2
27	.222,-2	.156,-2	.169,-1	57	.294,-3	.104,-2	.728,-2
28	.212,-2	.140,-2	.180,-1	58	.299,-3	.792,-3	.835,-2
29	.180,-2	.163,-2	.122,-1	59	.233,-3	.723,-3	.102,-1
				60	.160,-3	.580,-3	.108,-1

GEOPHYSICAL RESEARCH PAPERS

No. 1. Isotropic and Non-Isotropic Turbulence in the Atmospheric Surface Layer, Heinz Lettau, Geophysics Research Directorate, December 1949.

No. 2. Effective Radiation Temperatures of the Ozonosphere over New Mexico, Adel, Geophysics R-D, December 1949.

No. 3. Diffraction Effects in the Propagation of Compressional Waves in the Atmosphere, Norman A. Haskell, Geophysics Research Directorate, March 1950.

No. 4. Evaluation of Results of Joint Air Force-Weather Bureau Cloud Seeding Trials Conducted During Winter and Spring 1949, Charles E. Anderson, Geophysics Research Directorate, May 1950.

No. 5. Investigation of Stratosphere Winds and Temperatures From Acoustical Propagation Studies, Albert P. Crary, Geophysics Research Directorate, June 1950.

No. 6. Air-Coupled Flexural Waves in Floating Ice, F. Press, M. Ewing, A. P. Crary, S. Katz, and J. Oliver, Geophysics Research Directorate, November 1950.

No. 7. Proceedings of the Conference on Ionospheric Research (June 1949), edited by Bradford B. Underhill and Ralph J. Donaldson, Jr., Geophysics Research Directorate, December 1950.

No. 8. Proceedings of the Colloquium on Mesospheric Physics, edited by N. C. Gerson, Geophysics Research Directorate, July 1951.

No. 9. The Dispersion of Surface Waves on Multi-Layered Media, Norman A. Haskell, Geophysics Research Directorate, August 1951.

No. 10. The Measurement of Stratospheric Density Distribution with the Searchlight Technique, L. Elterman, Geophysics Research Directorate, December 1951.

No. 11. Proceedings of the Conference on Ionospheric Physics (July 1950) Part A, edited by N. C. Gerson and Ralph J. Donaldson, Jr., Geophysics Research Directorate, April 1952.

No. 12. Proceedings of the Conference on Ionospheric Physics (July 1950) Part B, edited by Ludwig Katz and N. C. Gerson, Geophysics Research Directorate, April 1952.

No. 13. Proceedings of the Colloquium on Microwave Meteorology, Aerosols and Cloud Physics, edited by Ralph J. Donaldson, Jr., Geophysics Research Directorate, May 1952.

No. 14. Atmospheric Flow Patterns and Their Representation by Spherical-Surface Harmonics, B. Haurwitz and Richard A. Craig, Geophysics Research Directorate, July 1952.

No. 15. Back-Scattering of Electromagnetic Waves From Spheres and Spherical Shells, A. L. Aden, Geophysics Research Directorate, July 1952.

No. 16. Notes on the Theory of Large-Scale Disturbances in Atmospheric Flow With Applications to Numerical Weather Prediction, Philip Duncan Thompson, Major, U. S. Air Force, Geophysics Research Directorate, July 1952.

GEOPHYSICAL RESEARCH PAPERS (Continued)

No. 17. The Observed Mean Field of Motion of the Atmosphere, Yale Mintz and Gordon Dean, Geophysics Research Directorate, August 1952.

No. 18. The Distribution of Radiational Temperature Change in the Northern Hemisphere During March, Julius London, Geophysics Research Directorate, December 1952.

No. 19. International Symposium on Atmospheric Turbulence in the Boundary Layer, Massachusetts Institute of Technology, 4-8 June 1951, edited by E. W. Hewson, Geophysics Research Directorate, December 1952.

No. 20. On the Phenomenon of the Colored Sun, Especially the "Blue" Sun of September 1950, Rudolf Penndorf, Geophysics Research Directorate, April 1953.

No. 21. Absorption Coefficients of Several Atmospheric Gases, K. Watanabe, Murray Zelikoff and Edward C. Y. Inn, Geophysics Research Directorate, June 1953.

No. 22. Asymptotic Approximation for the Elastic Normal Modes in a Stratified Solid Medium, Norman A. Haskell, Geophysics Research Directorate, August 1953.

No. 23. Forecasting Relationships Between Upper Level Flow and Surface Meteorological Processes, J. J. George, R. O. Roche, H. B. Visscher, R. J. Shafer, P. W. Funke, W. R. Biggers and R. M. Whiting, Geophysics Research Directorate, August 1953.

No. 24. Contributions to the Study of Planetary Atmospheric Circulations, edited by Robert M. White, Geophysics Research Directorate, November 1953.

No. 25. The Vertical Distribution of Mie Particles in the Troposphere, R. Penndorf, Geophysics Research Directorate, March 1954.

No. 26. Study of Atmospheric Ions in a Nonequilibrium System, C. G. Stergis, Geophysics Research Directorate, April 1954.

No. 27. Investigation of Microbarometric Oscillations in Eastern Massachusetts, E. A. Flauraud, A. H. Mears, F. A. Crowley, Jr., and A. P. Crary, Geophysics Research Directorate, May 1954.

No. 28. The Rotation-Vibration Spectra of Ammonia in the 6- and 10-Micron Regions, R. G. Breene, Jr., Capt., USAF, Geophysics Research Directorate, June 1954.

No. 29. Seasonal Trends of Temperature, Density, and Pressure in the Stratosphere Obtained With the Searchlight Probing Technique, Louis Elterman, July 1954.

No. 30. Proceedings of the Conference on Auroral Physics, edited by N. C. Gerson, Geophysics Research Directorate, July 1954.

No. 31. Fog Modification by Cold-Water Seeding, Vernon G. Plank, Geophysics Research Directorate, August 1954.

GEOPHYSICAL RESEARCH PAPERS (Continued)

No. 32. Adsorption Studies of Heterogeneous Phase Transitions, S. J. Birstein, Geophysics Research Directorate, December 1954.

No. 33. The Latitudinal and Seasonal Variations of the Absorption of Solar Radiation by Ozone, J. Pressman, Geophysics Research Directorate, December 1954

No. 34. Synoptic Analysis of Convection in a Rotating Cylinder, D. Fultz and J. Corn, Geophysics Research Directorate, January 1955.

No. 35. Balance Requirements of the General Circulation, V. P. Starr and R. M. White, Geophysics Research Directorate, December 1954.

No. 36. The Mean Molecular Weight of the Upper Atmosphere, Warren E. Thompson, Geophysics Research Directorate, May 1955.

No. 37. Proceedings on the Conference on Interfacial Phenomena and Nucleation.
I. Conference on Nucleation.
II. Conference on Nucleation and Surface Tension.
III. Conference on Adsorption.
Edited by H. Reiss, Geophysics Research Directorate, July 1955.

No. 38. The Stability of a Simple Baroclinic Flow With Horizontal Shear, Leon S. Pocinki, Geophysics Research Directorate, July 1955.

No. 39. The Chemistry and Vertical Distribution of the Oxides of Nitrogen in the Atmosphere, L. Miller, Geophysics Research Directorate, April 1955.

No. 40. Near Infrared Transmission Through Synthetic Atmospheres, J. N. Howard, Geophysics Research Directorate, November 1955.

No. 41. The Shift and Shape of Spectral Lines, R. G. Breene, Geophysics Research Directorate, October 1955.

No. 42. Proceedings on the Conference on Atmospheric Electricity, R. Holzer, W. Smith, Geophysics Research Directorate, December 1955.

No. 43. Methods and Results of Upper Atmospheric Research, J. Kaplan, G. Schilling, H. Kallman, Geophysics Research Directorate, November 1955.

No. 44. Luminous and Spectral Reflectance as Well as Colors of Natural Objects, R. Penndorf, Geophysics Research Directorate, February 1956.

No. 45. New Tables of Mie Scattering Functions for Spherical Particles, R. Penndorf, B. Goldberg, Geophysics Research Directorate, March 1956.

No. 46. Results of Numerical Forecasting With the Barotropic and Thermotropic Models, W. Gates, L. S. Pocinki, C. F. Jenkins, Geophysics Research Directorate, April 1956.

UNCLASSIFIED

AD

217076

FOR
MICRO-CARD
CONTROL ONLY

Reproduced From
Best Available Copy

Armed Services Technical Information Agency

ARLINGTON HALL STATION; ARLINGTON 12 VIRGINIA

UNCLASSIFIED